NOAA Technical Memorandum NWS SR-110

OPERATIONAL EVALUATION OF 5 CM DOPPLER RADAR--

TWO CONTRIBUTIONS:

Review of WSR-74C Doppler Radar Operations at
WSO Montgomery, Alabama (April 1982 - August 1983)

Paul E. Pettit
WSO Montgomery, Alabama

The Johnson-Effect: Resolving Ambiguous Doppler Velocities

William N. Johnson
WSO Montgomery, Alabama

Scientific Services Division
Southern Region
Fort Worth, Texas
May 1984

Review of WSR-74C Doppler Radar Operations at WSO Montgomery, Alabama

(April 1982 - August 1983)

by

Paul E. Pettit

Meteorologist-in-Charge, WSO Montgomery

1. INTRODUCTION

Researchers have been experimenting for many years with Doppler radar systems, looking for more reliable methods to gather and process more useful radar data (e.g., Lemon, Donaldson and Burgess, 1977). The National Weather Service (NWS) is rapidly moving forward with plans to replace the aging WSR-57 (10cm wavelength) radar network (Bonewitz, 1981; Ray and Colbert, 1982). It has become apparent through these and other research efforts and more recent radar technology, that any new network of meteorological radars must have Doppler capability (NSSL Staff, 1979).

The NWS office in Montgomery, Alabama has been interested in this "new radar technology" for several years and a working relationship with Enterprise Electronics Corp. (EEC) has provided this office with a look at some of the newer advances in meteorological radar equipment.

In April, 1982, a request was made by Enterprise Electronics Corp. to the NWS for permission to install a Doppler add-on package to the WSR-74C (5cm) located at Montgomery, Alabama. The request for Montgomery as the add-on site was made for several reasons. The close proximity to the Enterprise plant was a major factor because problems with the system could be quickly corrected. Another factor was that the Montgomery office was fortunate to have adequate personnel, thus easing any additional workloads on office duties. On April 5, 1982, an agreement was signed between the NWS and EEC which allowed a commercially produced Doppler radar to be located in an operational environment within a National Weather Service field facility. The installation was to be on a loan basis with no designated termination date.

It must be made clear in this introduction that the prototype add-on equipment was by no means the ultimate in Doppler radar. However, later advances led to a more advanced system which was installed at Montgomery in July of 1983.[1] Operating characteristics of the WSR-74C add-on package are given in Appendix I.

This manuscript is furnished for technical information only. The National Oceanic and Atmospheric Administration does not approve, recommend, or endorse the equipment of EEC; and the results expressed herein should not be used in advertising, sales promotion, or to indicate in any manner, either implicitly or explicitly, endorsement of the product by the National Oceanic and Atmospheric Administration.

---

[1]During the summer of 1983, a Doppler processor, paid for by a group of citizens in the Chicago area, became operational on the NWS WSR-74S (10cm) radar in Marsailles, IL. Similar equipment was installed on the WSR-74C (5cm) on a loan basis in July 1983 at Montgomery, Alabama.

2. OPERATIONAL OBJECTIVES

From the initial installation, it was evident that firm and realistic objectives were needed for operation of the equipment.

The objectives were:

a.) To operate the Doppler add-on in an operational environment using the data to issue warnings, statements and advisories within Montgomery's 22 county warning area and for adjacent counties covered by other NWS offices.

b.) To demonstrate that the equipment could be operated and velocity data could be interpreted by the present staff of Weather Service Specialists. The method of training was to be primarily hands-on experience.

c.) To monitor the durability and reliability of the equipment, documenting failures and related problems.

d.) To experiment with methods of eliminating velocity ambiguities and develop hardware or software methods to achieve this objective. To investigate ideas leading to improved effectiveness of operations.

e.) To act as liason with Enterprise Electronics Corp.

f.) To coordinate the operations with appropriate NWS officials and issue routine status reports.

g.) To document data within the limits of a full service Weather Service Office and make this data available to others through reports, published papers, etc.

3. DOPPLER ADD-ON PACKAGE

The initial Doppler attachment, associated processing equipment and display monitor for the WSR-74C consisted of the following components:

3.1 At the Transmitter

a. Phase locked Stalo/Coho.

b. Dual pulse width/PRF package.

c. Linear IF amplifier.

d. Dual pulse detector.

e. Line driver.

f. 3db IF splitter.

g. Relay for pulse width switching.

These components were installed inside the existing WSR-74C transmitter cabinet. Installation required only several hours. Two extra coaxial cables were needed between the transmitter site and the radar console.

3.2 Pulse-Pair Processor

This device is an EEC developed 3-bit pulse-pair type processor, that converts the measured transmitted frequency phase shift caused by moving objects into video that can be converted into six (6) colors for display.[1] Information on technical aspects of the processing methods is available through EEC. The pulse-pair technique was first described by Rummler (1968) and later implemented by Lhermitts (1972) and Groginsky (1972).

The basic characteristics of the originally installed processing unit were:

a.)	Maximum Range[2]	250, 125, 100 Km
b.)	Pulse Repetition Frequency[3]	600, 1200, 1500 PRF
c.)	Range Bin Resolution	1/8 Km
d.)	Integration Factor	Adjustable between 8, 16, 32, and 64 PRF periods
e.)	Output	0 plus levels 1-6
f.)	Unambigious Velocity	± 16/mps at 1200 PRF

The controls to the processor consisted mainly of switches to change range, select PRF (Doppler or intensity), select colors or overlays for display, change integration and to change threshold settings. The simplicity of the processor controls made it relatively easy for office personnel to become quickly adjusted to them.

3.3 Display Monitor

The display monitor consisted of a Panasonic 19 inch color television monitor. Resolution was two kilometers. Six colors were displayed (3 toward velocities, 3 away velocities, plus white for non-moving targets). Since white represented slow (0-6 mph) or non-moving targets; ground clutter was displayed as white. Annotation of antenna elevation, PRF in use and date/time were displayed as added data.

Display overlay ranges were:

64KM.....35NM.....30 and 60KM Range rings
128KM.....69NM.....50 and 100KM Range rings
256KM.....138NM.....100 and 200KM Range rings
512KM.....250NM (Intensity only)

The scan convertor was an EEC convertor and no technical description of this unit will be given.

---

[1]Designed by former NCAR engineer, Mr. Grant Gray in consultation with EEC.

[2]PRF Dependant.

[3]PRF's changed to 600, 800 and 1100 in August 1982.

4. TRAINING

Training for the Doppler attachment at Montgomery consisted of two phases. The first phase was an introductory briefing by Enterprise personnel. The second phase was actual hands-on experience with the equipment.

Functions of each of the unit controls were explained by Harold Quast of EEC and it was also explained that any apprehension about the use of the controls was unfounded, because little damage to the equipment would result. A short discussion of Doppler theory and its integration to weather radar was also given. Shortcomings, such as velocity folding, were pointed out.

The bulk of training had to be delegated to first hand experience because very little published data was available on operational use of this type of data. Many hours were spent reviewing documented data which was recorded on video cassettes. The importance of these video tapings cannot be overemphasized. The ability to record the velocity display data during a wide variety of meteorological events for later study and in some cases informative arguments, proved to be an invaluable tool in the training process.

One very valid point could not be overlooked. The Doppler attachment and the processed data were merely an extension of the existing weather radar. Therefore, a working knowledge of factors such as beam filling, anomalous propogation, range folding, velocity folding, etc., were vital to interpretation of data.

5. METHOD OF OPERATION

Operation of the EEC Doppler attachment was very simple. Only one switch was required to transfer from intensity data (2 microsecond pulse) to velocity data (.5 microsecond pulse). Originally, manual slowdown of antenna rotation to one and one-half revolutions per minute was required.[1] The slower rotation speeds were necessary for adequate processing time with the pulse-pair.

Intensity data had first priority. All established procedures were used to interpret the intensity data first in order to determine maximum intensity of echoes, maximum cloud tops, trends, etc. (Lemon, 1980). Once all pertinent intensity data were analyzed, switchover to velocity mode of operation was made.

There were several methods of Doppler operation. One was to scan manually (using a selected PRF), investigating suspicious areas for shear, convergence, divergence, etc. Another method was to store entire 360 degree sweeps of data in memory. Two or more sweeps were usually made using the appropriate PRF settings, which could later be retrieved from memory, then compared and processed for easier interpretation.

One of the processing methods, developed at Montgomery by William N. Johnson, became very useful. Dubbed the J-Effect, the method allows two PRF sweeps of data from memory to be compared in a unique unfolding scheme which removed velocity ambiguities out to 192 MPH using the two highest PRF sweeps of stored memory. An Apple II home computer programmed with software written by Johnson allowed equipment operators to display selected velocities upon request.

---

[1] Automatic slowdown of antenna rotation to 11/2 RPM was made in the spring of 1983.

The severe thunderstorm criteria associated with gusts within the NWS is 58 MPH. Through Apple driven software controlling the monitor display of velocity data, personnel at Montgomery could request velocities at or near the warning threshold of 58 MPH for display. Once the requested velocities had been displayed, decisions to warn were based on other meteorological variables such as beam height, storm intensity, storm tops, etc. Software had been developed to compute some azimuthal shear (MPH/KM), however, vertical extent of shear requires manually elevated scans and consumes more time.

One advantage of storing data in memory was that it did not tie up the radar for long periods of time, thus depriving private users of data. The Montgomery radar remote data was stored for the last full intensity sweep when the radar was operating in the Doppler mode. Montgomery is not a NWS network radar, therefore, more time for Doppler scanning was available.

Regardless of the methods used, operations required a man-machine mix in order that the most effective use of the equipment could be obtained.

6. DOCUMENTATION OF DATA

A decision was made soon after installation that appropriate documentation of all data, intensity and velocity, was a necessity.

A GYYR time lapse color video recorder was purchased for recording purposes. One half inch VHS video tapes were used. Hundreds of hours of documentated velocity and intensity data were recorded. Video recordings of diversified meteorological events were made frequently. These recordings have been very valuable, especially as a training aid.

Special electronic circuits were designed by Mr. Johnson to allow for automatic control of the video recorders. Intensity data were recorded using 300 hour time lapse settings, taking .5 frames per second. Velocity data were recorded essentially in real time or 60 frames per second. Voice information was added with the video for additional clarification. An example of the Montgomery Tape Documentation Log is given in Appendix II.

Additional documentation consisted of a Doppler Events Log, Appendix III. System electronic failures were documented by the station Electronic Technician. It is interesting to note that there were no major hardware failures from installation through July 31, 1983.

7. SELECTED RESULTS AND STATISTICS

Some of the results at Montgomery using the pulse-pair processor have been favorable, although there are certainly improvements that can be made: in hardware, and in data interpretation. Characteristic signatures of Doppler velocity data can be identified by non-meteorologists in many cases, provided the data is used in conjunction with other available meteorological variables.

Figure 1, covering the period April 1982 through July 31, 1983, shows types of information, action taken, lead times and resulting verification for selected events. A tornado detected first as a hook echo on the intensity plan-position indicator (PPI) on April 26, 1982, at approximately 1945Z produced a good azimuthal shear on the velocity display, confirming that there was rotation

Figure 1

EVENT	DATE	TIME (Z)	DOPPLER DISPLAY	AZIMUTH (DEG)	RANGE (NM)	DOPPLER V (MPH)	OBSERVED V (MPH)	WARNING ISSUED TIME (Z)	LEAD TIME (MIN)	VERIFIED Y	VERIFIED N	REMARKS
TORNADO	4/26/92	2000	SHEAR	290	32	70	UNKNOWN	TORNADO 1950	10	Y		HOOK ON MET. GOLFBALL HAIL AND WIND DAMAGE EAST DALLAS COUNTY. TORNADO CONFIRMED
TORNADO	4/26/92	2130	TVS	360-50	22	100	UNKNOWN	TORNADO 2120	10	Y		HOOK ON MET. GOLFBALL TO BASEBALL HAIL IN EAST AUTAUGA AND WEST ELMORE COUNTY. TORNADO CONFIRMED
TORNADO[1]	4/27/92	0555	MESO-CYCLONE	260	38	80	UNKNOWN	SVR. TSTM. 0555	0	Y		WIND DAMAGE AND SMALL TORNADO IN DALLAS CO.
TORNADO	9/2/92	2326	SHEAR	290	32	50-68	UNKNOWN	SPL. WX. 2245	0	Y		SMALL TORNADO WNW OF SELMA IN DALLAS CO. TREES SHEARED OFF AND 4 HOUSES DAMAGED
TORNADO[2]	11/12/92	1930	NONE	5	18	35-50	UNKNOWN	SPL. WX. 1925	0		N	FINE LINE PRECEDED STORM ON RADAR SUSPECT REPORT OF SMALL TORNADO IN ELMORE CO. ONE SMALL SHED UNROOFED WITH TREE DMG.
TORNADO	3/27/83	1838	MESO-CYCLONE	215	43	100	UNKNOWN	TORNADO 1840	37	Y		MESO-CYCLONE MOST EVIDENT AT 12 000FT. VIP 3...TOP 32 000FT...MOVG 230/40...HEAVY ATTENUATION OF MET DATA..SMALL TORNADO
HOOK	4/19/83	1943	NONE	280	22	30	UNKNOWN	TORNADO 1945	2		N	WITH TWO TOUCHDOWNS FOR SEVERAL HUNDRED YARDS WEST OF GEORGINIA IN BUTLER COUNTY NO CIRCULATION ON DOPPLER..PEA SIZE HAIL
FUNNEL CLOUD	4/23/83	1946	SHEAR	40	19	60	UNKNOWN	TORNADO 1955	15	Y		REPORTED WEST OF SELMA AT 2012Z HOOK ON MET. FUNNEL CLOUD CONFIRMED 2002Z
HOOK[3]	4/23/83	1953	SHEAR	40	16	46-96	UNKNOWN	N/A	N/A	---	---	SE OF WETUMPKA IN ELMORE CO. LARGE TREES DOWN..SMALL HAIL...GOLF BALL HAIL EAST OF STORM AT 2000Z.
SVR. TSTM.	4/27/92	0635	STRAIGHT WIND	260	5	50	50 (MGM)	SVR.TSTM. 0625	10	Y		MONTGOMERY AND ELMORE COUNTIES REPORTED VERY STRONG GUSTS...POWER OUTAGES...MINOR DAMAGES
SVR. TSTM.	6/4/92	2310	STRAIGHT WIND	340	10	50	49 (MGM) 46 (MXF)	SVR. TSTM. 2210	60	Y		WINDS ESTIMATED 50+MPH IN :CITY...LARGE TREES DOWN WITH POWER OUTAGES ALL OVER CITY. HEAVY ATTENUATION ON MET RADAR DISPLAY.
SVR. TSTM.	6/4/92	2005	SHEAR	315	65	61	56 (CKL)	SVR. TSTM. 2035	25	Y		BHM CALLED BY MGM AT 2005Z
SVR. TSTM.[4]	6/12/92	2345	DOWNBURST	280	10	60	59 (MGM)	BY WSFO BHM AIRPORT WIND WARNING 2346	0	Y		FIRST GUST AT MGM 27 MPH AT 0005Z...GUST TO 59 MPH WITH 1/2 INCH HAIL AT 0015Z
LN. TSTMS	3/5/83	2315	STRAIGHT WIND	240-250	5-10	45	41 (MGM)	SVR. TSTM. 2315	0		N	SOME DAMAGE TO POWER LINES AND TREES IN CITY...GUST AT MGM AT 2302Z
SVR. TSTM.	4/08/83	1457	SHEAR	140	13	60	UNKNOWN	NONE	0	Y		STATEMENT IN EFFECT...HAYBARN BLOWN AWAY.. SURVEY CONFIRMED HIGH STRAIGHT LINE WINDS
SVR TSTM.	4/23/83	2013	STRAIGHT WIND	100	19	70	UNKNOWN	SVR. TSTM. 2020	7	Y		BOW ECHO ON MET....CKL RPTD HOOK...TRAILER OVERTURNED AND TREES UPROOTED
TSTM.	5/19/83	2351	SHEAR	210	49	NOT LOGGED	UNKNOWN	SVR. TSTM. 0000	9		N	WARNING BASED ON MET. DATA
LN. TSTMS	6/23/83	0590	STRAIGHT WIND	120-240	54	LIGHT	UNKNOWN	SVR. TSTM. 0400	60		N	WARNING BASED ON MET. DATA..UNVERIFIED

1. Investigation of video tapes viewed at a later date indicates possible meso-cyclone in area of damage
2. Investigation of video tapes revealed no significant doppler signatures...report highly suspect
4. Doppler presentation was not correctly interpreted by observer...study reveals good downburst signature.
3. Two different shears in same area at different times...evaluated as one event.

within the storm cell. This storm was tracked by radar at Montgomery from beginning to end, moving across three counties and passing within 22 nautical miles north of the radar site. This storm occurred only 21 days after the initial installation of the add-on package and the staff at Montgomery had minimal experience with Doppler signature recognition.

The storm at 1838Z on March 20, 1983 (Fig. 1), shows that better lead times can be gained with additional experience. The meso-cyclone associated with this event was first evident in the mid levels (12-15 thousand feet). The most significant point about this particular event is that without the velocity data, no warning would have been issued. The cell producing the meso-cyclone with Doppler and producing a small tornado later in time was embedded in a large area of light to moderate rain (.1 to .5 inches per hour). The C-band radar was attenuating significantly through this rain area. The cell which produced the tornado was TRW+ (.5 to 1.0 inches per hour) and had a maximum top of 32,000 feet. A decision to issue a tornado warning was based mainly on the velocity data, resulting in a lead time of greater than 30 minutes.

On June 12, 1982, at 0015Z a downburst occurred at the airport resulting in a recorded wind gust to 59 MPH. An airport wind advisory was issued at 2345Z for possible wind gusts to 45 MPH at Dannelly Field. A post review of video tapes verified that winds were greater than forecast and better interpretation may have called for a severe thunderstorm warning. It is interesting to note, however, that strong winds occurred only over the airport and no strong winds or damage were reported at distances of only 1 to 2 miles from the anemometer.

Figure 2 shows other selected wind gust events at Montgomery. One observation about the data becomes readily apparent. There tended to be over forecasting of wind gust speeds. One explanation for this was that velocities were estimates related to the velocity at beam height above ground and not totally representing the true surface winds. The closer the estimates were made to the radar, the better the forecast results. Care was a necessity to these estimates as the velocities computed by the pulse-pair were those relative to the beam and often much less than the absolute wind. Another explanation was that the wind measuring equipment was available from only two nearby sites (Montgomery-Dannelly Field and Maxwell Air Force Base a short distance to the northeast), allowing limited recorded data from the ground. Higher gusts may have occurred in the area but there was no way to accurately measure them.

Figure 3 represents other selected events noted during the same period: April 1982 through July 1983. The event on September 21, 1982, at 1525Z shows that non-precipitation related velocities can be detected with the Montgomery 5 centimeter Doppler add-on package. Velocities in clear air were detected to ranges of approximately 60 KM provided there were sufficient atmospheric discontinuities, insects or other moving particles present (Wilson: 1980). Clear air velocities were noted only during the warmer months and rarely if ever occurred with the colder air masses.

Listed below are some warning statistics for NWS, Montgomery, Alabama, for the years 1981, 1982, and the first six months in 1983.

YEAR	FAR	POD
1981	.93	.19
1982	.79	.60
1983	.76	.36

Velocity data was not available the first three months of 1982.

Figure 2

EVENT	DATE	TIME Z	DOPPLER DISPLAY	AZIMUTH (DEG)	RANGE (NM)	DOPPLER V (MPH)	OBSERVED V (MPH)	AIRPORT WND. WRNG. ISSUE TIME	LEAD TIME (MIN)	REMARKS
GUST	6/28/82	2302	STRAIGHT WIND	STATION	0	40	35 (MGM)	2245Z	17	WARNING FOR GUSTS TO 40MPH ON FIELD
GUST	7/11/82	2222	STRAIGHT WIND	280	15	38	29 (MGM)	2240Z	18	WARNING FOR GUSTS TO 40MPH ON FIELD
GUST	8/11/82	2100	STRAIGHT WIND	310	15	40	24 (MGM) 40 (MXF)	2054Z	9	WIND GUSTED AT MXF AT 2045Z
GUST	12/4/82	1700	STRAIGHT WIND	200-320	0-75	25	25 (MGM)	1740Z	84	WARNING FOR GUSTS TO 40MPH ON FIELD...LINE OF THUNDERSTORMS MOVING EASTWARD THROUGH AREA
GUST	12/15/82	2022	STRAIGHT WIND	200-360	0-75	28	29 (MGM)	2108Z	46	WARNING FOR GUSTS TO 40MPH ON FIELD
GUST	5/03/83	1450	STRAIGHT WIND	270	22	50	36 (MGM)	1402Z	48	WARNING FOR GUSTS TO 40-48MPH ON FIELD
GUST	5/29/83	2303	STRAIGHT WIND	330	22	35	30 (MGM)	2242Z	21	WARNING FOR GUSTS TO 40MPH ON FIELD
GUST	6/18/83	0254	STRAIGHT WIND	220	15	40	NONE	0234Z	20	WARNING FOR GUSTS TO 40MPH...THUNDERSTORMS DIMINISHED BEFORE REACHING AIRPORT
GUST	6/19/83	2045	STRAIGHT WIND	90	13	36	26 (MGM) 26 (MXF)	2024Z	19	WARNING FOR GUSTS TO 40MPH
GUST	7/5/83	1930	STRAIGHT WIND	290	24	40	22 (MGM)	1913Z	17	WARNING FOR GUSTS TO 40MPH...STORM PASSED SOUTH OF AIRPORT
GUST	8/01/83	2045	STRAIGHT WIND	175	16	40	28 (MGM) 30 (MXF)	2034Z	11	WARNING FOR GUSTS TO 40MPH...STORM PASSED EAST OVER CITY WHERE STRONG GUSTS WERE REPORTED

The Probability of Detection (POD) is the proportion of severe weather events correctly predicted. The formula is POD=x/(x+y) where x is the number of severe weather events predicted and y is the number of severe events not predicted to be severe. Higher POD usually indicates good detection methods.

The False Alarm Rate (FAR) is the proportion of incorrect predictions of a severe event and is calculated by the formula FAR=z/(x+z) where x is the severe events predicted to be severe and z is the non-severe events predicted to be severe. Higher values of FAR indicate the "cry wolf syndrome" which diminishes the effectiveness of warnings issued.

The statistics given (POD, FAR) are for a full 22 county warning area. There were three full counties and portions of one county that lay outside the effective range of the Doppler add-on. Therefore, the possibility of better numbers exists if FAR and POD were computed with those counties and storms removed from the data.

Improvement in FAR and POD were noted during 1982. It has not yet been determined why the POD for the first six months of 1983 showed the significant decrease. It must be remembered that the NWS methods of acquiring verification of storm damage is limited by a number of factors, one being the resources available at a local NWS office to gather post storm data (Henderson: 1982).

Improvements can be made with warnings and lead times increased provided proper radar techniques are used and interpretation of data collected and processed is used wisely.

8. FUTURE OPERATIONS

This paper is only a preliminary review of the EEC attachment utilizing the pulse-pair processor. A newer EEC system, consisting of a full Doppler console, Fast Fourier Transform Processor (FFT) developed at MIT and a 12 foot antenna (1.025 beam width) was installed on a loan to the National Weather Service in mid July of 1983 (EEC: 1983). Advantages of the newer system, which also includes spectral data displays, should be promising.

More operational experience and additional documentation will be achieved and it is hoped that exciting accomplishments will result at Montgomery.

9. CONCLUSIONS

Sixteen months of experience with the EEC attachment and the pulse-pair processor has led to the conclusion that several of the objectives listed on page 2 were met.

The equipment was operated in an operational environment where warnings, statements and advisories were issued based on the operator's interpretation of data. Experience was a primary factor, however, the equipment was useable by the staff of Weather Service Specialists to achieve satisfactory results in many cases.

Figure 3

EVENT	DATE	TIME Z	DOPPLER DISPLAY	AZIMUTH DEG.	RANGE NM.	DOPPLER V MPH	OBSERVED V MPH	WARNING ISSUED TIME Z	LEAD TIME MIN.	REMARKS
GUST	4/21/82	0141	STRAIGHT LN.	270	5	22	23 (MGM)	NONE	N/A	SPECIAL WEATHER STATEMENT, IN GROUND CLUTTER, HEAVY ATTENUATION ON MET. RADAR, GOOD VEL. DISPLAY
GUST	6/28/82	2302	STRAIGHT LN.	STN.	0	40	35 (MGM)	AIRPORT WND. WRNG. 2245Z	17	WARNING FOR GUSTS TO 40MPH ON FIELD
GUST	6/29/82	1753	STRAIGHT LN.	STN.	0	30	25 (MGM)	SPL. WX. STATEMENT 1645Z	N/A	STORM MOVED THROUGH GROUND CLUTTER
GUST	7/11/82	2222	STRAIGHT LN.	280	15	38	29 (MGM)	AIRPORT WND. WRNG. 2240Z	18	WARNING FOR GUSTS TO 40MPH ON FIELD
FINE LN.	7/14/82	2226	————	250	5-15	15	UNKNOWN	N/A	N/A	DECAYED THUNDERSTORM
FINE LN.	7/28/82	2205	----------	250-260	0-40	10	UNKNOWN	N/A	N/A	
GUST	8/11/82	2100	STRAIGHT LN.	310	15	40	24 (MGM) 40 (MIF)	AIRPORT WND. WRNG. 2054Z	-9	WIND GUST AT MIF AT 2045Z
GUST	8/18/82	2115	STRAIGHT LN.	285	32	25	UNKNOWN	NONE	0	POWER OUTAGES AND TREE DAMAGE IN DALLAS COUNTY STORM MOVING AT RIGHT ANGLES TO BEAM
GUST	8/19/82	0015	STRAIGHT LN.	065	54	40	UNKNOWN	NONE	0	TREE DAMAGE AND SEVERE LIGHTNING IN ELMORE COUNTY
CLEAR AIR	8/31/82	0111	----------	STN	0-22	18	N/A	N/A	N/A	IN GROUND CLUTTER, NO CLOUDS, SFC WND 6MPH, AP
FINE LN.	9/2/82	2300	STRAIGHT LN.	320-60	10-25	26-35	27 (MGM) 30 (MIF)	NONE	N/A	FINE LN. APPEARED ON DOPPLER BEFORE MET. RADAR
CLEAR AIR	9/3/82	1919	----------	NE-SW	30(MAX)	10	N/A	N/A	N/A	UPPER AIR WINDS CONFIRM
SMOKE	9/21/82	1525	----------	340	20	15	N/A	N/A	N/A	CALL FROM WHITE CITY NW OF MGM, LADY WANTED TO KNOW WHAT CLOUD WAS? TRACKED SMOKE THROUGH GROUND CLUTTER TO SE OF CITY
CLEAR AIR	12/2/82	1837	----------	320-160	10-40	10	N/A	N/A	N/A	SCATTERED CLOUDS, VSBY 7+
GUST	12/4/82	1700	STRAIGHT LN.	200-320	0-75	25	25 (MGM)	AIRPORT WND. WRNG. 1740Z	84	WIND WARNING FOR GUSTS TO 40MPH, LINE OF TSTMS
GUST	12/15/82	2022	STRAIGHT LN.	200-360	0-75	28	29 (MGM)	AIRPORT WND. WRNG. 2108Z	46	WIND WARNING FOR GUSTS TO 40MPH, SPL. WX. STATEMENT

The pulse-pair processed data was useful for manual interpretation of significant weather events although it became evident that additional methods for more effective interpretation of data were necessary. The result was the use of a computer to solve part of the problem. Doppler signatures of meteorological events such as gust fronts, fine lines, shear data and in some cases meso-cyclones could be interpreted with the equipment.

The durability of the system was good. Downtime was minimal.

Doppler velocity data can be interpreted by non-meteorologists if an adequate background in radar theory is present and sufficient on-the-job training is made available (Wilson: 1980). Personnel at Montgomery found little difficulty operating the equipment. Interpretation of the data was more of an experience factor with positive results coming only after numerous hours of operation and review of documented data.

A simplified scheme for velocity unfolding was obtainable. Attenuation of the 5cm intensity data remained a problem under certain circumstances, however, there was little or no attenuation with the 5cm velocity data.

More automation is a necessity and software must be developed to eliminate time consuming visual interpretation of the velocity data.

The addition of velocity data to the overall accumulation of meteorological information available to NWS personnel at Montgomery was extremely useful but this additional data source must not be misconstrued. Doppler velocity data is only an additional source of useful information and must be utilized in conjunction with all other available meteorological sources in order that the most effective services can be furnished.

10. ACKNOWLEDGEMENTS

This paper reflects the collective efforts of the staff at Montgomery, Alabama, National Weather Service Office and the many conversations with others throughout the NWS, NCAR and Enterprise Electronics Corporation. I wish to particularly acknowledge the wise advice of Jim Wilson of NCAR and the motivation given by Dr. Joe Friday. A special thanks to Larry Lee of the National Severe Storms Forecast Center and Frank Makosky, Area Manager, WSFO, Birmingham.

11. REFERENCES

Bonewitz, J.D., 1981: The NEXRAD Program..an Overview, Preprints, 20th Conf. on Radar Meteor. (Boston), Boston, Amer. Meteor. Soc., 757-761.

Burgess, D.W., 1976: Single Doppler Radar Vortex Recognition: Part 1, Mesocyclone Signatures, Preprints, 17th Conf. on Radar Meteor. (Seattle), Boston, Amer. Meteor. Soc., 97-103.

Enterprise Electronics Corp., "Description of Doppler Subsystems for C-band Radar Systems", (Enterprise, 1983), 25 pp.

Gray, G.R., R.J. Serafin, D. Atlas, R.E. Rinehart, and J.J. Boyajian, 1975: Real-time Color Doppler Radar Display, Bull. Amer. Meteor. Soc., 56, 580-588.

Groginsky, H.L., 1972: Pulse Pair Estimation of Doppler Spectrum Parameters, Preprints, 15th Conf. on Radar Meteor., Boston, Amer. Meteor. Soc., 233-236.

Henderson, J.H., 1982: Doppler Radar's Potential Impact on the National Weather Service Watch and Warning Program, Proceedings of the NEXRAD Radar Symposium/Workshop, Norman, Cooperative Institute for Mesoscale Meteorological Studies, 50-64.

Johnson, W.N., 1983: The Johnson Effect, unpublished manuscript on file at the National Weather Service Office, Montgomery, AL, 7 pp.

Lemon, L.R., R.J. Donaldson, Jr., D.W. Burgess and R.A. Brown, 1977: Doppler Radar Application to Severe Thunderstorm Study and Potential Real Time Warning, Bull. Amer. Meteor. Soc., 58, 1187-1193.

Lemon, L.R., 1980: Severe Thunderstorm Radar Identification Techniques and Warning Criteria, NOAA Tech Memo, NWS, NSSFC-3, 60 pp.

Lhermitte, R.M., 1972: Real Time Processing of Meteorological Doppler Radar Signals, Preprints, 15th Conf. on Radar Meteor., Boston, Amer. Meteor. Soc., 364-367.

Ray, P.S. and K. Colbert, Editors, 1982: Proceedings of the NEXRAD Doppler Radar Symposium/Workshop, Norman, Cooperative Institute for Mesoscale Meteorological Studies, 235 pp.

Rummler, W.D., 1968: Introduction of a New Estimator for Velocity Spectral Parameters, Tech Memo MM-68-4121-S, Whippany, N.J., Bell Tel. Labs, 18 pp.

Staff, NSSL, AFGL, NWS, and AWS, 1979: Final Report on the Joint Doppler Operational Project (JDOP), 1976-1978, NOAA Tech Memo ERL NSSL-86, Norman, Natl Severe Storm Lab., 84 pp.

Wilson, J.W., R. Carbone, H. Baynton and R. Serafin, 1980: Operational Application of Meteorological Doppler Radar, Bull. Amer. Meteor. Soc., 61, 1154-1168.

APPENDIX I

WSR74-C CHARCTERISTICS WITH DOPPLER

WAVELENGTH	5.4 Centimeters
PEAK POWER	250 Kilowatts
PULSE LENGTH	
1. Intensity	2.0 Microseconds
2. Doppler	0.5 Microseconds
MINIMUM DETECTABLE SIGNAL	-107 Dbm
ANTENNA	
1. Diameter	8 Foot
2. Beam Width	1.65 Degrees
MAXIMUM RANGE	
1. 250 PRF	600KM/322NM
2. 600 PRF	250KM/135NM
3. 800 PRF	187KM/101NM
4. 1100 PRF	136KM/ 73NM
EFFECTIVE RANGE[1]	
1. 250 PRF	230KM/125NM
2. 600-800 PRF	187KM/101NM
3. 800-1100 PRF	136KM/ 73NM

[1]The effective range at Montgomery was determined to be the maximum range at which unambigious velocity data could be obtained. Two 360 degree sweeps of data at two different PRFs are required to obtain unfolded velocity data.

APPENDIX II

ENTERPRISE WSR-74C DOPPLER ATTACHMENT TAPE IDENTIFICATION LOG

TAPE #	COUNTER	DATE	TIME (Z)	DESCRIPTION OF EVENT	REMARKS	VER. LOG ITEM #
XXIII	970-1160	5/20/83	0123Z 0529Z	"hunderstorms over S Alabama	Tornado Watch in effect , No Voice, Time Lapse Met	
	1160-1375	5/20/83	0529Z	Velocities aloft	Voice, Bases 15,000 Tops Abv 30,000, Vip 3&4	
	1375-1690	5/20/83	0649Z	Severe Storm over Mississippi	Voice, Time Lapse Met, Top ABV 55,000	
	1690-End	5/20/83	1045Z	Embedded Thunderstorms	Voice	
XXIV	00-460	5/20/83	2205Z	Time Lapse Met Data	No Voice, Some Doppler	
	460-542	5/21/83	2155Z	Velocities Aloft	Voice	
	542-846	5/21/83 5/22/83	2247Z 0600Z	Time Lapse Met Data, Some Doppler	Voice, Line TSTM wear Alabama, Vip 2, Tops 25,000	
	846-2138	5/22/83	0600Z 1400Z	Line Thunderstorms	Voice, Tornado Watch, VIP 4, Tops 35,000, Display Problems	
	2138-2160	5/22/83	1400Z	Aircraft Accident Macon County	Time Lapse Met, No Echoes	Item #13
	2160-2240	5/22/83	1540Z	RW and TRW	No Voice	
	2240-End	5/22/83 5/23/83	2245Z 1251Z	Line Thunderstorms	Voice, Met Time Lapse	
XXV	00-940	5/26/83	1657Z	Time Lapse Met		
	940-1270	5/29/83	1951Z	Line of thunderstorms	Voice	
	1270-1470	5/29/83	2303Z	Line of thunderstorms	Voice, Tops 35-40,000 , Airport Wind Warning	Item #14
	1470-1630	5/30/83	0101Z	Line of thunderstorms	Met and Doppler	
	1630-2046	5/30/83 6/03/83	0650Z	Time Lapse Met		
	2046-2340	6/04/83	0712Z	Line of thunderstorms N Alabama	Time Lapse Met, Some Voice	
	2340-End	6/04/83 6/05/83	1750Z 0637Z	Thunderstorms S Alabama	No Voice , Met Time Lapse	
XXVI	00-320	6/18/83	0254Z 0400Z	Thunderstorms	J-Effect....Airport Wind Warning	Item #15
	320-605	6/19/83	1954Z 2215Z	Line of Thunderstorms	Airport Wind Warning...Voice...VIP5	Item #16
	605-1000	6/23/83	0242Z 0600Z	Line of Thunderstorms moving NW	Voice	Item #19
	1000-1067	6/28/83	2025Z	Thunderstorms	VIP5...Tops 45,000...Probably would have been issuing warnings without doppler	Item #20
	1067-1117	7/04/83	2010Z	Meso-Cyclone	VIP5...Top 52,000...VIP 5 to 25,000...BHM issued SVR TSTM WRNG No damage reported in warning area	Item #18
	1117-1344	7/05/83	1930Z	Thunderstorms	Airport wind warning... Small hail E MGM	Item #17
	1343-1503	8/01/83	2042Z	Funnel reported east MGM	No rotation on doppler ....Airport Wind Warning	Item #21
	1510-End	8/22/83	16-20Z	Clear Air Convergence	Thunderstorms formed along convergence line...Voice	NEW LOG Item #1

APPENDIX III

DOPPLER DATA LOG

DATE _____

LOG NO. _____

SIGNATURE No.	SIGNATURE TYPE	TIME GMT	AZIMUTH ANGLE (Deg)	ELEVATION ANGLE (DEG)	RANGE (N. MI.)	HEIGHT (FT)	CIRCULATION DIAM (N.MI	CIRCULATION ΔV MPH	INTERPRETATION EASY	INTERPRETATION DIFF	DID DOPPLER IDENTIFY CONFIRM	WRNG LEAD TIME (MIN)	COMMENTS: (ATTENTUATION, HOOK ECHO, WER, BWER, STORM VERIFICATION, ETC.)

The Johnson-Effect: Resolving Ambiguous Doppler Velocities

by

William N. Johnson
WSO, Montgomery, Alabama

INTRODUCTION

The National Weather Service Office in Montgomery, Alabama, has been experimenting since the spring of 1982 with a Doppler "add-on" package for a WSR-74C 5cm radar. This Doppler package, as with all pulsed Doppler radars, inherently has velocity ambiguities due to data sampling methods.

Pulsed Doppler weather radar operates by transmitting a series of equally spaced pulses. Velocity is determined by measuring the pulse-to-pulse phase change for each sample point in range. Velocity ambiguity or "FOLDING" occurs at the Nyquist frequency Fn given by:

$$Fn = PRF/2$$

Where PRF is the pulse repetition frequency. The maximum unambiguous radial velocity is given by:

$$Vr = \lambda \times PRF/4$$

λ is the wave length of the radar signal. For a given PRF, with c the velocity of light, the maximum unambiguous range is given by:

$$Rm = c/2PRF$$

Examples of limits in range and velocity measurements of typical Doppler weather radars are shown in Table I below.

TABLE I

RADAR	PRF	MAX RANGE	MAX VELOCITY
10cm	1200pps	125Km - 67Nm	32m/s - 71mph
10cm	600pps	250Km - 135Nm	16m/s - 36mph
5cm	1200pps	125Km - 67Nm	16m/s - 36mph
5cm	600pps	250Km - 135Nm	8m/s - 18mph

Research at various facilities indicates that it is desirable to measure unambiguous velocities of at least 56 mph (JDOP report, 1979). It has been suggested by scientists at the National Severe Storms Laboratory that if a radar could transmit pulses with different interpulse times, the unambiguous velocity could be extended (Sirmans et al., 1976). With this background, an unfolding technique referred to as "The Johnson-Effect" was developed by the author for use on the WSR-74C radar at Montgomery. This approach is a simple one, yet it extends the unambiguous velocity of the pulsed Doppler radar from 36 mph to 192 mph.

Manual interpretation of the Doppler display required the radar operator to alternately display PRF_1, then PRF_2, noting the color change at a specific point on the display monitor. This color change represented a range of wind speeds. For example, as shown in Fig. 1, a color change from red (PRF_1) to blue (PRF_2) represents a range of wind speeds from 24-30 mph.

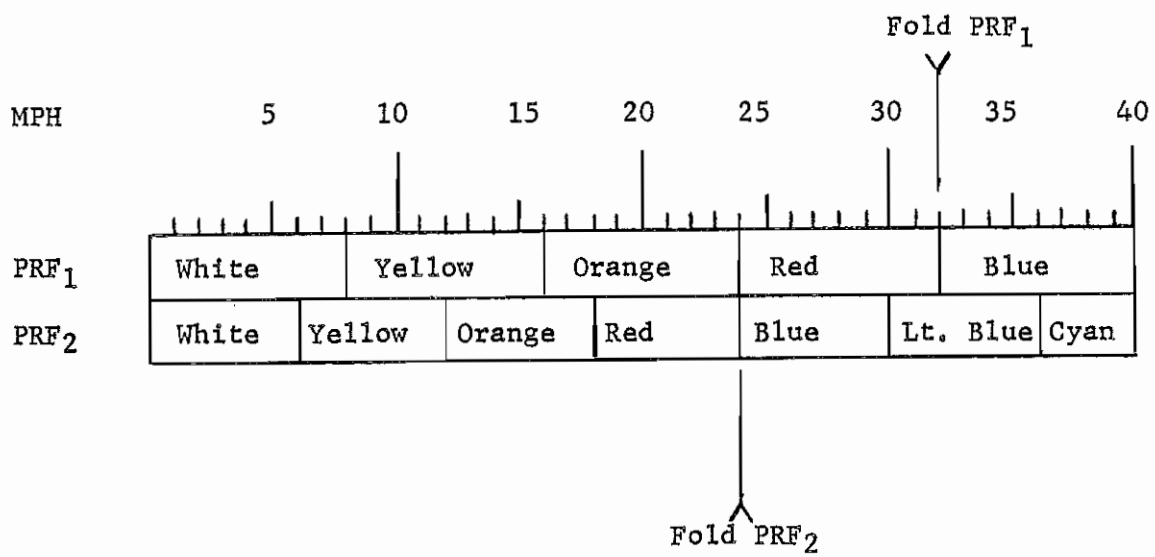

FIGURE I

To utilize the Johnson-Effect, each color was assigned a numerical value. White = 7, Yellow = 6, Orange = 5, Red = 4, Blue = 3, Lt. Blue = 2, Cyan = 1. A table was then compiled to represent every possible color combination between PRF_1 and PRF_2. Table II is a corresponding numerical representation of Fig. 1.

TABLE II

MPH	PRF_1	PRF_2	Reference Code
0-6	7	7	77
6-8	7	6	76
8-12	6	6	66
12-16	6	5	65
16-18	5	5	55
18-24	5	4	54
24-30	4	3	43
30-32	4	2	42
32-36	3	2	32
36-40	3	1	31

Experimentation with different pulse repetition rates revealed that a ratio of approximately 1.35:1 between PRF_1 and PRF_2 (Sirmans et al., 1976) produced a numerical pattern that represented specific wind speeds from 0 to 192 mph.

The Johnson-Effect process utilizes an Apple II microcomputer with 64K memory, two 256 X 256 4-bit memories in the Doppler processor, and a computer interface.

The Johnson-Effect is accomplished in three steps:

STEP 1. Run a 360^0 sweep of the radar beam at PRF_1. It will be stored. in Memory 1 of the Doppler processor.

STEP 2. Run another 360^0 sweep at PRF_2. It will be stored in Memory 2 of the Doppler processor.

STEP 3. Instruct the computer to display the wind speed, or speeds you wish to see on the display monitor.

The computer interface, Fig. 2, designed and fabricated by the author, is used to extract data from the Doppler processor Memory 1 and Memory 2.

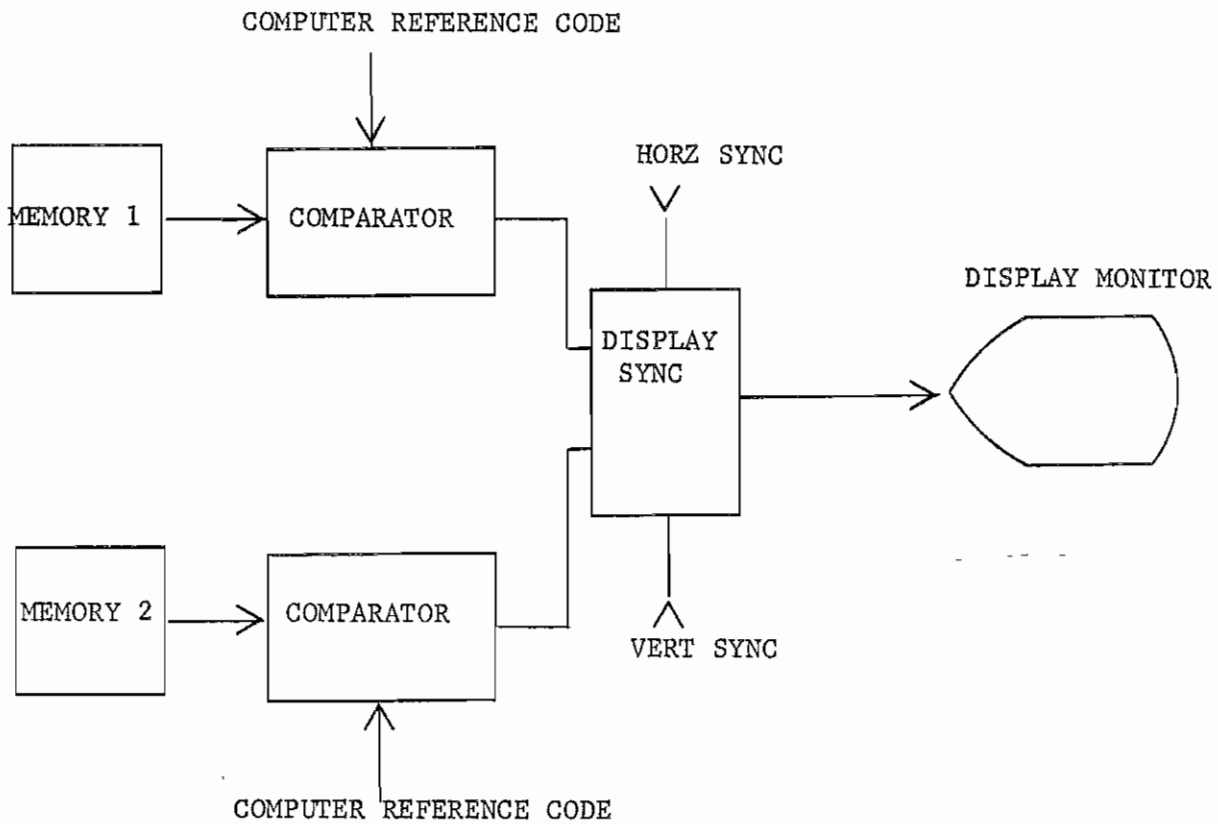

FIGURE II

The computer program will generate a numerical reference code, representing a wind speed, that will be compared to the incoming data from Memory 1 and Memory 2. If the incoming data from Memory 1 and the computer reference code match, the computer interface will generate an output which is displayed on the odd numbered horizontal lines of the display monitor. Likewise, if the incoming data from Memory 2 and the computer reference code match, the computer interface will generate an output which is displayed on the even numbered horizontal lines of the display monitor. When the outputs of the computer interface coincide, a solid color is displayed on the display monitor. This indicates a correct match for the wind speed selected. An incorrect match will be displayed as a hatched color (space between horizontal lines), readily distinguishable from a true match. Fig. 3 shows a correct and an incorrect match.

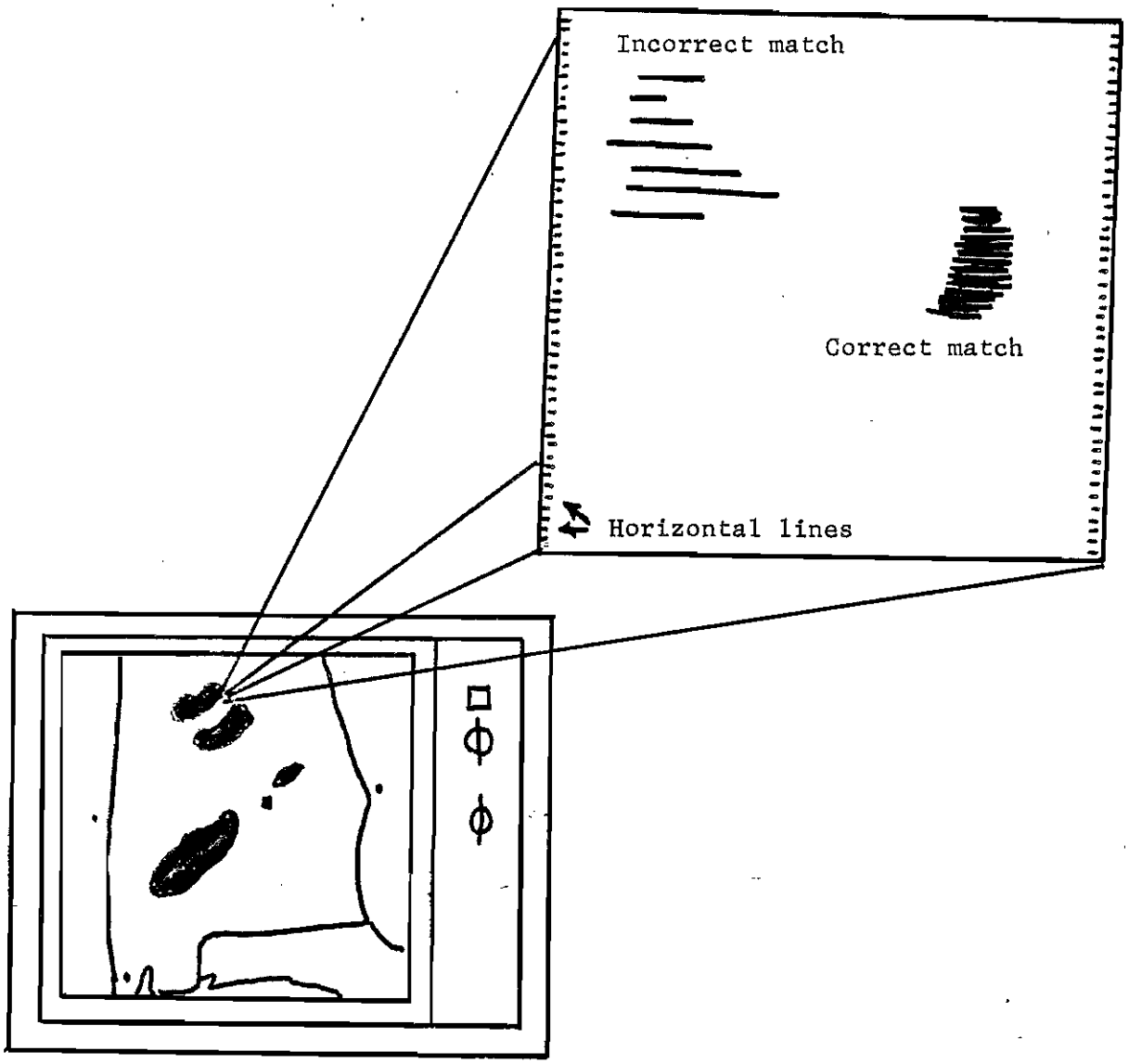

FIGURE III

ADVANTAGES OF THE JOHNSON-EFFECT

1. Extended unambiguous velocities using an Apple II computer, computer interface, and other hardware all purchased or fabricated for under $6000.

2. An unfolded velocity display available in less than 3 minutes. This includes the time required to store two 360^{0} sweeps.

3. The operator has the capability of selecting any wind speed which coincides with an appropriate reference code.

4. The computer has the capability of automatically stepping through a range of wind speeds to show the radar operator the progression of the wind field.

DISADVANTAGES OF THE JOHNSON-EFFECT

1. The Johnson-Effect is not a fully automated system. A "man-machine mix" is required for interpretation.

2. Application is limited by the time required to run two 360^{0} sweeps of velocity data.

CONCLUSION

The Johnson-Effect is a simple and relatively inexpensive technique which partially removes the velocity ambiguity associated with the pulsed Doppler radar at Montgomery, Alabama. This report has briefly summarized initial development work on the technique. As experience with the system grows, modifications are possible. Already a newer hard-wired version of this technique is being used at WSMO Marseilles, Illinois; at WSO Montgomery, Alabama; and in the private sector.

ACKNOWLEDGMENTS

The author acknowledges and appreciates previous work by personnel of the National Severe Storms Laboratory and other agencies. Their findings have aided this author greatly. Special acknowledgment is given to the staff at WSO Montgomery, Alabama, for their support and feedback during the development of the Johnson-Effect.

REFERENCES

Sirmans, D., Zrnic, D. and Burgarner, B.: Extension of Maximum Unambiguous Doppler Velocity by Use of Two Sampling Rates. Preprints, 17th Conf. Radar Meteor., Oct., 1976, Seattle, WA, Am. Meteor. Soc., Boston, MA.

Staff of NSSL, NOAA/ERL; Weather Radar Br., Air Force Geophysics Lab.; Equip. Dev. Lab., NWS; Air Weather Serv., U.S. Air Force, 1979: Final Report on the Joint Doppler Operational Proj. (JDOP) 1976-1978. NOAA Tech Memo ERL NSSL-86.