QC
851
.U6
T32
no.93-1

NOAA Techniques Development Laboratory
Computer Program NWS TDL CP 93-1

LIBRARY
OCT 27 1993
N.O.A.A.
U.S. Dept. of Commerce

AFOS PROFILER SOFTWARE SYSTEM

Silver Spring, Md.
August 1993

U.S. DEPARTMENT OF COMMERCE / National Oceanic and Atmospheric Administration / National Weather Service

PREFACE

The Techniques Development Laboratory's (TDL's) computer program (CP) series is a subset of TDL's technical memorandum series. The CP series documents computer programs written at TDL primarily for the Automation of Field Operations and Services (AFOS) computers.

The format for the series follows that given in the AFOS Handbook 5, Reference Handbook, Volume 6: Applications Programs, Part 1: Policy and Procedures, published by the Office of Technical Services/AFOS Operations Division.

NOAA Techniques Development Laboratory
Computer Program NWS TDL

CP 83-1 Gross Sectional Analysis of Wind Speed and Richardson Number. Gilhousen, Kemper, and Vercelli, May 1983. (PB83205062)
CP 83-2 Simulation of Spilled Oil Behavior in Bays and Coastal Waters. Hess, October 1983. (PB84122597)
CP 83-3 AFOS-Era Forecast Verification. Heffernan, Newton, and Miller, October 1983. (PB84129303)
CP 83-4 AFOS Monitoring of Terminal Forecasts. Vercelli, December 1983. (PB84145697LL)
CP 83-5 Generalized Exponential Markov (GEM) Updating Procedure for AFOS. Herrmann, December 1983. (PB84154822LL)
CP 84-1 AFOS Display of MDR Data on Local Map Background. Newton, July 1984. (PB84220797)
CP 84-2 AFOS Surface Observation Decoding. Perrotti, September 1984. (PB85137586)
CP 84-3 AFOS-Era Forecast Verification. Miller, Heffernan, and Ruth, September 1984. (PB86148319LL)
CP 85-1 AFOS Monitoring of Terminal Forecasts. Vercelli and Norman, May 1985. (PB85236388LL)
CP 85-2 AFOS Terminal Forecast Decoding. Vercelli, Norman, and Heffernan, October 1985. (PB86147360LL)
CP 85-3 AFOS-Era Forecast Verification. Ruth, Miller, and Heffernan, October 1985. (PB86148319LL)
CP 87-1 AFOS Terminal Aerodrome Forecast Formatting. Wantz and Eggers, July 1987. (PB8810449LL)
CP 87-2 AFOS-Era Forecast Verification. Ruth and Alex, July 1987. (PB88125570LL)
CP 87-3 Forecast Review. Wolf, July 1987. (PB88125588LL)
CP 87-4 AFOS Monitoring of MDR Data Using Flash Flood Guidance. Norman and Newton, October 1987. (PB88137450LL)
CP 87-5 AFOS Terminal Forecast Quality Control. Vercelli and Leaphart, December 1987. (PB88169925LL)
CP 88-1 AFOS Terminal Forecast Decoding. Vercelli and Leaphart, August 1988. (PB89101240LL)
CP 89-1 Structure Flow Diagram Generator. Adams, March 1989. (PB89195978AS)
CP 89-2 String Search. Adams, March 1989. (PB89195986AS)
CP 89-3 Extended Memory Library for AFOS Applications. Leaphart, June 1989. (PB92216290)
CP 92-1 Separating Individual Synoptics from within Synoptic Collectives. Beasley, August 1992. (PB92232313)

QC
851
U6
T32
no. 93-1

NOAA Techniques Development Laboratory
Computer Program NWS TDL CP 93-1

AFOS PROFILER SOFTWARE SYSTEM

Gary F. Battel, Mark A. Leaphart, Joel T. Moeller, and Michael A. Petrie

Techniques Development Laboratory
Silver Spring, Md.
August 1993

LIBRARY
MAR 1 1 1994
N.O.A.A.
U.S. Dept. of Commerce

UNITED STATES
Department of Commerce
Ronald H. Brown
Secretary

National Oceanic and
Atmospheric Administration
D. James Baker
Under Secretary

National Weather Service
Elbert W. Friday, Jr.
Assistant Administrator

TABLE OF CONTENTS

		Page
1.	Introduction	1
2.	Software Structure	2
	A. Data Flow	2
	B. Software Description	3
	C. Software Execution	8
3.	Set Up Procedures	10
	A. Allocating Memory to the Background Partition	10
	B. Adding Product Identifiers to the Data Key File	11
	C. Downloading Software into the User Directory	12
	D. Executing the Software	12
	E. Automatic Scheduling of the Software	13
4.	Tailoring the System	13
	A. Selecting the Options for the Decoder Program	13
	B. Executing Software Manually	15
	C. Selecting Preformat Options	15
	D. Saving Preformat Options	17
	E. Executing Software at Alternate Locations (WSO's)	18
5.	Description of Products	18
	A. Time Sections	18
	B. Cross Sections	18
	C. Plan Views	19
	D. Hodographs	20
6.	Utility of Products	21
	A. U and V Wind Components	21
	B. Time Differences of the U and V Components	21
	C. Wind Velocity	21
	D. Wind Speed	21
	E. Streamlines	22
	F. Hodographs	22
	G. Orthogonal Wind Components	22
	H. Wind Speed and Wind Direction Shear	22
	I. Thermal Wind	23
	J. Perturbation Wind	23
	K. Derived Absolute Vorticity	24
	L. Derived Divergence	25
	M. Time Differences of Absolute Vorticity and Divergence	25
	N. Derived Vertical Velocity	26
	O. W Wind Component	26
	P. Time Differences of the W Component	26
	Q. Returned Power	27
	R. Profiler Data Uses	27
7.	Cautions and Restrictions	28
8.	References	30

TABLE OF CONTENTS

		Page
9.	Program Information and Procedures for Installation and Execution	32
CWPCF.	Create Wind Profiler Control File	32
PWPCF.	Print Wind Profiler Control File	37
WPSET.	Update Control File	40
WPDEC.	Decode Wind Profiler Data	44
TSPLOT.	Display Time Sections of Horizontal Wind Vectors	48
TSCON.	Display Time Sections of Contoured Products	54
TSKIN.	Display Time Sections of Contoured Kinematic Products	62
CSPLOT.	Display Cross Sections of Horizontal Wind Vectors	69
CSCON.	Display Cross Sections of Contoured Products	75
PVPLOT.	Display Plan Views of Horizontal Wind Vectors	82
PVCON.	Display Plan Views of Contoured Products	88
HHPLOT.	Display Hodographs of Horizontal Wind Vectors	96
WPCON.	Contour Profiler Data	102
10.	Figures	105
11.	Appendix - Product Inventory List	177

TDL CP 93-1
August 1993

AFOS PROFILER SOFTWARE SYSTEM

Gary F. Battel[1]
Mark A. Leaphart[1]
Joel T. Moeller[1]
Michael A. Petrie[1]

1. INTRODUCTION

The Office of Oceanic and Atmospheric Research (OAR) is operating a Wind Profiler Demonstration Network (WPDN) at 29 stations in the central United States. Wind profilers are highly sensitive, Doppler radar instruments oriented to produce a vertical profile of the winds from near the earth's surface (500 m AGL) to heights above the tropopause. Wind profilers are capable of operating and measuring valid data even in the presence of clouds and uniform precipitation. The profilers provide data at 6-minute intervals; but due to data transmission constraints, these data are averaged to produce hourly average wind components. Van de Kamp (1988) more thoroughly describes the operation of a wind profiler.

The process of integrating the wind profiler data into normal operations requires applications programs on the Automation of Field Operations and Services (AFOS) system. These programs provide a means for the Weather Service Forecast Offices (WSFO's), Weather Service Offices (WSO's), Center Weather Service Units (CWSU's), and other interested users to display observed profiler winds and derived products.

Processors in Boulder, Colorado, (the Hub) collect data from all of the profilers in the WPDN, and from an additional profiler, owned and operated by the U.S. Air Force. Housekeeping data (location, time, and site-specific information) and surface meteorological data at some sites are also transmitted to the Hub. The Hub performs required quality control (QC); processes the data to produce wind components, returned power, and wind component variability; and distributes results to the NWS Telecommunications Gateway (NWSTG) in Silver Spring, Maryland, in Binary Universal Form for the Representation of meteorological data (BUFR) format (see WMO 1988 for a description of BUFR). The data are then relayed to the AFOS system for national and regional distribution. The data include station information, such as observation and averaging times, surface data, and upper air data.

The profiler operates in two modes--low and high (Fig. 1). Winds are reported at 0.25-km intervals (range gates). Both the low height ranges (0.5 to 9.25 km) and the high height ranges (7.5 to 16.25 km) are 0.25 km apart; however, the range gates are the midpoint of a resolution layer which is different for each mode. The low mode resolution layer is 0.35 km, while the high mode resolution layer is 1.00 km. Thus, winds reported at 6.75 km represent the average wind in the layer from 6.58 to 6.93 km AGL, and winds

---

[1]General Sciences Corporation, under contract to the National Weather Service.

reported at 14.25 km represent the average wind in the layer from 13.75 to 14.75 km.

Note that there is some overlapping of the high mode and low mode data. More importantly, there is overlapping of the resolution layers within each mode. This is especially true of the high mode data, where only data at every fourth range gate is independent. In order to reduce the amount of data transmitted without loss of information, only 43 of the possible 72 range gate values are included in the transmission. Thus, the reported upper air data consist of data for 36 low mode ranges (0.5 to 9.25 km in increments of 0.25 km), and 7 high mode ranges (9.25 to 16.25 km in 1.0 km increments). High mode data in the overlapping region may be substituted for missing low mode data.

Low and high mode data consist of u (east-west), v (north-south), and w (vertical) wind components; u, v, and w QC indicators; and u, v, and w variability measurements.

For the most part, the wind profilers continuously provide accurate, reliable winds throughout the troposphere. However, problems such as radio interference can cause the profiler to produce spurious measurements. To screen the data for gross errors, QC algorithms were installed at the Hub (Brewster 1989). While profilers are designed and operated to allow detection of small-scale features, some wind measurements that pass the QC checks may actually be invalid.

This document describes a software system which processes and displays data from the Hub via time section (time versus height), cross section (horizontal distance versus height), plan view (constant atmospheric level), and hodograph formats. These programs can be run as stand alone programs with appropriate switches, or they can be run automatically with options inserted by the user into an AFOS preformat. This document describes the profiler software structure in Section 2, procedures for first time users to set up their system in Section 3, procedures to tailor the system to meet specific goals in Section 4, a description of each type of product in Section 5, a description of their potential utility in a forecasting environment in Section 6, and restrictions to the program in Section 7.

2. SOFTWARE STRUCTURE

The following sections describe the data flow, the individual subprograms, and the instructions for executing the software.

A. Data Flow

The program and data file relationships from program initiation to product output are illustrated in Fig. 2. The applications in this system can be run in either of two modes (using an options file, or choosing command line switches). In the options file mode, options selected by the user via an AFOS preformat screen are stored in a file which is accessed as input by the profiler software. The applications can be executed individually or, more conveniently, by means of the macro WPMAC.MC (see Fig. 3). TCMAC.MC, TKMAC.MC, CCMAC.MC, and PCMAC.MC are macros created by programs TSCON, TSKIN, CSCON, and PVCON, respectively. Upon execution, these macros generate graphics products from internal plot files (IPF's). A sample of these macros

is shown in Fig. 4. Figs. 5 through 17 are structure flow diagrams for each program. In the command line mode, applications can be run from either the Alphanumerics Display Module (ADM) or Dasher terminal by typing an execution statement via a command line. Command line switches can be set to select options.

B. Software Description

The definitions of the important files and the software modules are presented in this section. Fig. 2 depicts the relationships between each of the software files and programs.

Preformat cccMCPWPD, Programs CWPCF and PWPCF, and File WPCF.nn

The preformat (cccMCPWPD) is a menu screen which allows the user to choose products and associated options. The 'ccc' represents the local AFOS node identifier (e.g., DEN for Denver) and is different for each office. There are three pages to the preformat, one for each type of product (time section, plan view, and cross section) (Figs. 18 through 20). As a result of editing this preformat, a database product (cccWPDxxx) specifies output products to be created by the profiler software system. The 'xxx' represents the local AFOS station identifier (e.g., COS for Colorado Springs).

Program CWPCF creates the WPCF.nn file. WPCF.nn is an expanded version of the preformat, containing one record per station, station set, or pressure level. It is this expanded version which is accessed efficiently by the processing programs. The user chooses the 'nn' extension in order to save multiple files with options onto disk, because the choice of options may change as weather conditions change. Saving multiple files eliminates the need to reedit the preformat which creates them. CWPCF does not need to be run if there are no changes from the previous run, or if a particular set of options has previously been saved. Program WPSET may be run to select one of the WPCF.nn files, as explained shortly in the WPSET program description subsection.

PWPCF is a utility program which allows the user to view the options chosen and stored in any WPCF.nn file. A local switch allows the user to specify the numerical extension of the WPCF.nn file to be reviewed. The date and time of the data file creation also appear on the printout.

File WPSTAT

The station directory information file (WPSTAT) contains the 5-character code for each station name, as well as each station's latitude, longitude, and AFOS identification. This information is needed to label the incoming profiler data in BUFR format which is identified only by latitude and longitude for each station. WPSTAT is supplied with the starter diskette (see Section 3), and will be updated by the maintenance programmer only if there is a change in the number or locations of stations comprising the WPDN.

Program WPSET and File WP.CF

WPSET is a multi-functional program that sets up control file WP.CF. An important function of this program is to allow the user to vary the amount of decoded data to be stored by changing the current or default values to other

user-selected stations and time periods. The default values for WP.CF are all of the encoded stations in the input BUFR message (NMCWPDERL), and 24 hours.

Another main function of this program, as stated in the above subsection describing CWPCF, is to allow the user to choose the 'nn' extension of file WPCF.nn to be used later as input to the product generating programs (TSPLOT, TSCON, TSKIN, CSPLOT, CSCON, PVPLOT, PVCON, and HHPLOT). In other words, if the product generating software is to be executed using an options file, WPSET contains the extension of the options file which will be used as input. The WPCF.nn file, you may recall, is created and stored using an AFOS preformat.

It is not recommended that the user change the hours or stations very often, because an increase in the number of hours or stations will result in an increase in processing time, perhaps significantly for the first hour that the change takes effect. However, the 'nn' extension of the options file to use as input to the processing programs may need to be changed regularly (perhaps daily or even hourly) as weather conditions change. Changing the extension indicates to the product generating programs which options file to use, and eliminates the step of editing the preformat screen.

The minor functions of this program include: allowing the user to specify an input file name different than NMCWPDERL, if this ever becomes necessary; allowing the user to specify the name of the decoded data file (WPDATA is the default); and allowing the user to specify the name of the alarm/alert message file (cccWPDMSG is the default).

File WP.CF is created interactively during the installation of the starter software. Fig. 21 is a sample of an interactive session printout. WPSET must be run once to set all the options. This run will also familiarize the user with the program. After this initial run, WPSET is an optional program, and does not need to be run if there are no changes from the previous run.

Program WPDEC, and Files WPDATA and WPCAPT

WPDEC is the BUFR decoder program, which translates binary data fields into integer values and places them into a file called WPDATA for more efficient access by the applications software. WPDEC reads the control file (WP.CF) to determine the stations and number of hours that are requested for decoding. WPDEC also reads the input data, which is normally stored in the database; however, the decoder will also decode historical RDOS input files, when requested. The program then creates WPDATA, an output RDOS file, which consists of:

- latitude,
- longitude,
- station elevation,
- observation time,
- averaging period,
- surface data (wind speed, wind direction, MSL pressure, temperature, rainfall rate, and relative humidity);

and for each wind profiler range gate:

- u, v, and w components,
- u, v, and w QC flags,

- returned power,
- and u, v, and w variability.

The decoded data are stored in one file for all displays. WPDEC will also create data capture statistics for each station, and store them in file WPCAPT, when requested to do so by the user. (See Fig. 22.)

Program TSPLOT

This program must be executed to produce any combination of the following time section products: horizontal wind velocity, thermal wind, and perturbation wind. If run in command line mode, the products and options can be generated with switches. If run in options file mode, the products and options must be stored in control file WPCF.nn. The wind symbol generation program TSPLOT reads the options and uses the u and v values stored in WPDATA to create an array of time versus height data values. If selected, calculations of the horizontal wind velocity, thermal wind, and perturbation wind are performed. Then, a buffer to hold commands to plot wind symbols is created. The user may choose the height interval in the calculation of the thermal wind, and the averaging time interval for the perturbation wind. Options for all these products include specifying the lowest height for display, and the number of hours and ending hour. The ending hour represents the most recent hour that the user wishes to display. For horizontal wind plots, the user can display all the data, or only the data which passes the QC checks. The product output is stored in Universal Transmission Format (UTF) in the AFOS database and can be displayed on the Graphics Display Module (GDM). By specifying a local switch, the user will route these database products to any addressee on the Regional (RDC) or State (SDC) Distribution Circuits. An RDOS file is created to verify the successful generation of each product, and is displayable on the ADM via the AFOS command 'DSP:TSPLOT.AP'. A sample output is shown in Fig. 23. The last three characters of each product identifier is listed, accompanied by the station or pressure levels, and a brief product caption.

Programs TSCON, WPCON, and GENUTF, Product cccWPDMSG, and File TSCON.AP

TSCON reads and uses values stored in the WPDATA and WPCF.nn files, or from switches on a command line, and via program WPCON, prepares time section contoured products such as: u, v, and w wind components; wind speed; returned power; wind direction and wind speed shear. As in program TSPLOT mentioned previously, TSCON options allow the forecaster to specify the base height, the number of hours, and ending hour in addition to the contour interval. After interpolating for missing data values, TSCON creates an array of gridded time versus height data values. If requested, calculations to compute wind speed from the u and v components of the wind are performed. The user may also select the height interval for calculating the wind direction or speed shear. TSCON swaps to program WPCON, passing the gridded data from each of these products as input for contouring. WPCON checks the range of data values, and may override the default or selected contour intervals in order to obtain at least three contour levels, but no more than 10. Via program GENUTF (Davis 1983), the product output is stored in UTF in the AFOS database, and may be routed to an addressee on the RDC or SDC. Most users are already familiar with program GENUTF, which is used extensively in NWS field offices.

In addition to graphics output, TSCON creates a file (cccWPDMSG) which is displayable on the ADM (Fig. 24) whenever the wind speed, the w-component of the wind, or the wind speed shear exceeds default or user-selected threshold values. An alert light flashes on the ADM, informing the user of the existence of this file. TSCON.AP is created to verify the generation of each product.

Programs TSKIN, WPCON, and GENUTF, and File TSKIN.AP

Using u and v components from three user-selected profiler stations, TSKIN calculates the kinematic properties of this wind flow field using matrix algebra for computational efficiency (Zamora et al. 1987), calculates vertical velocity by integrating divergence with height, generates grid fields of divergence, vorticity, and vertical velocity, swaps this information to program WPCON to create an IPF, and creates UTF displayable contours via program GENUTF. Both the divergence and vertical velocity calculations are adjusted according to a scheme similar to that described by O'Brien (1970), and modified by Dallavalle (1973). Options allow the user to specify the base height, the number of hours, and the ending hour in addition to the contour interval. As in TSCON, the program checks the range of data values, and may override the default or selected contour intervals in order to obtain between three and ten contours. Similar to the programs mentioned above, TSKIN uses either the values stored in WPDATA and WPCF.nn, or the switches on a command line as input. TSKIN.AP verifies the generation of each product.

Program CSPLOT, and File CSPLOT.AP

CSPLOT is executed when either the horizontal wind velocity or the thermal wind is requested to be displayed in cross section format. These products can be selected by the control file WPCF.nn, or by using the command line switches. In control file mode, this program reads the options from the WPCF.nn file, and uses the u and v values stored in the decoded data file (WPDATA) to display the vertical profiles of the appropriate wind values for a selected list of stations. In command line mode, products and options are generated with switches.

The user can select as many as eight stations for display. The program computes a line which best fits the selected stations, and represents it as a plane along which the station data are displayed. The display locations for each station are determined by finding the point of intersection of the line normal to the 'best-fit' line which contains the station location. The user may specify other options, such as the hour and the base height for display. For horizontal wind plots, the user can display all the data, or only the data which passes the QC checks. For thermal wind plots, the height interval for computations can be changed. The product output is stored in UTF in the AFOS database, and may be routed to an addressee on the RDC or SDC. The RDOS file CSPLOT.AP is created in order to verify the generation of each product.

Programs CSCON, WPCON, and GENUTF

CSCON reads values stored in the WPCF.nn and WPDATA files, or from command line switches, and via program WPCON creates any combination of the following user-selected cross section contour products: components parallel and perpendicular to the plane of the cross section, the w-component, and returned power. By means of a cubic spline interpolation method, CSCON creates an

array of gridded data values, representing coordinates in time and distance along the cross section. The user may select as many as eight stations for display.

The program computes a 'best-fit' line, along which the station data are displayed. The display locations for each station are calculated as the point of intersection of the line normal to the 'best-fit' line which contains the station location. If requested, the parallel and perpendicular components are calculated by rotating the east-west axis to match the 'best-fit' line. The user may also select other options, such as the hour, base height, and contour interval for display. The program checks the range of values to ensure that between three and ten contours will be plotted. Via program GENUTF, the product output is stored in UTF in the AFOS database, and may be routed to an addressee on the RDC or SDC. CSCON.AP is created to verify the generation of each product.

Program PVPLOT, and File PVPLOT.AP

PVPLOT is executed when either the horizontal wind or thermal wind is requested to be displayed in plan view format, using control file WPCF.nn, or command line switches. If run in the command line mode, options can be generated with switches. Otherwise, options will be obtained from the WPCF.nn file. PVPLOT will display a spatial representation of the wind data by reading the u and v components stored in WPDATA at the closest height corresponding to the requested pressure level for a standard atmosphere at each station, converting these components into wind direction and speed, and plotting them on an AFOS North American map background. As before, a buffer to hold commands to plot wind symbols representing horizontal wind velocity or thermal wind is created. The user may choose to display data for either of the products at these 12 levels: 200, 300, 400, 500, 600, 700, 850, and 900 mb, and 500, 750, 1000, and 1250 m AGL. Surface data may also be displayed from those profiler stations with surface observing systems by choosing the appropriate options for a horizontal wind velocity product.

The user may also choose the hour of the data to be displayed from the 24-hour period between the current hour and 23 previous hours. Specific options for each product also include flagging and displaying, or suppressing data which does not pass all the QC checks for the horizontal wind and choosing the height interval at which to calculate the thermal wind. The product output is stored in UTF in the AFOS database and may be routed to any addressee on the RDC or SDC. PVPLOT.AP will verify the generation of each product.

Programs PVCON, WPCON, and GENUTF, and File PVCON.AP

PVCON reads and uses values stored in the WPDATA and WPCF.nn files, or from switches in a command line, and via program WPCON prepares plan view contoured data products. These displayable products include: wind speed; w wind component; returned power; divergence; vorticity; streamlines; and time difference values of divergence, vorticity, and u, v, and w wind components. The user may select as many as 12 pressure levels for display. PVCON objectively analyzes the u, v, and w components, and where applicable, calculates divergence, vorticity, and the time difference parameters from each station to obtain the grid fields to be contoured. The user may also select the hour to display the data for any product. For all products except streamlines, the

contour interval is user-selectable. Finally, the hour interval for the time difference products may be selected.

The program checks the range of data values, and may override the default or selected contour intervals in order to obtain at least three contour levels, but no more than ten. The product output is stored in UTF in the AFOS database by means of program GENUTF, and may be routed to an addressee on the RDC or SDC. RDOS file PVCON.AP verifies the generation of each contoured plan view product.

Program HHPLOT

HHPLOT is executed to produce a hodograph for any user-selected combination of stations. Because HHPLOT can only be executed in command line mode, all options are generated with switches. HHPLOT reads the options and uses the u and v values stored in WPDATA for each level for the selected hour. The program plots and connects the end points of each 250-m vector in the lower atmosphere, starting at the surface, and ending at 6,000 m, to form a hodograph. Since profilers do not measure surface winds, surface data are obtained by one of three methods: observations from the Profiler Surface Observing System (PSOS) instruments; an estimate of the surface winds, using the 1000-m profiler winds; or user input via command line switches. The end point of the mean surface to 6,000-m layer wind vector is plotted, along with the end point of the storm motion vector, which is either calculated from the mean wind, or specified with a switch. In addition, results of several calculations are summarized numerically to the left of the hodograph plot. These calculations consist of the mean wind, storm motion, positive (clockwise) and negative (counterclockwise) wind shear components, storm inflow vectors at various heights and for various layers, streamwise vorticity, and positive, negative, and total storm-relative helicity.

C. Software Execution

As stated previously, there are two modes of software execution, options file and command line. The feature that distinguishes these two modes is the use of the expanded options file (WPCF.nn). When this file is accessed (options file mode), the processing programs obtain the needed information from WPCF.nn. In the command line mode, the user must indicate the products, stations, and options desired through command line switches at program initiation time. The command line mode is impractical when the number of selected options is large, but actually is the more sensible choice when the number of selected options is very small.

Options File Mode

In options file mode, programs are run by accessing a file containing user specifications. Options file processing consists of either editing the AFOS preformat (cccMCPWPD) and executing CWPCF to create WPCF.nn, or executing program WPSET to select the desired WPCF.nn file previously created. The user can take advantage of some of the profiler software design features which facilitates options file mode processing. These include saving multiple options files, automatic scheduling, and creating a hardcopy of the selected options.

During the process of editing the preformat, the user will probably discover that there are only a few combinations of products and options that will usually be chosen. Each combination can be assigned a different file extension when CWPCF is executed, and file WP.CF can be changed by program WPSET to point to one of these files before the processing programs are executed. Thus, when a particular set of options is desired at some future time, there will be no need to spend the extra time to reedit the preformat screen.

It is recommended that the decoder WPDEC be executed by the WATCHDOG automatic scheduler program (Schneider and Peterson 1988) each hour. Less than 90 seconds of execution time are required to decode an hour of data for all stations. However, if not run each hour, WPDEC will update the decoded file from the last decoded hour to the most recent hour in the database, with a corresponding increased length of execution time.

After the decoding has been completed, the eight programs which comprise the product generating software, TSPLOT, TSCON, TSKIN, CSPLOT, CSCON, PVPLOT, PVCON, and HHPLOT are executed via the WPMAC.MC macro (see Fig. 3) or an alternate macro created by the user. Each program reads file WP.CF which specifies the options file WPCF.nn to be accessed. It is advisable to add this macro to the automatic scheduler to execute upon completion of the decoding.

Command Line Mode

In command line mode, each processing program is executed individually with command line switches to indicate the desired options, stations, pressure levels, and products. Command line mode, which does not use the preformat screen, is generally practical when the user wishes to produce a small number of products. Because command lines on the ADM are limited to 35 characters, an extensive number of switches can only be entered on the Dasher terminal. In most offices, however, the Dasher is located at a distance from the ADM/GDM terminals, which makes this mode of entry inconvenient, except when the commands are stored in a macro.

Global switches are associated with the program name (e.g., TSPLOT/B). All of the switches which allow the user to select the output products are global switches, and the execution of a program with a global product switch triggers the command line mode. There is one other global switch, which can be used in either mode. The /Q switch requires the program to terminate, if no new data have been decoded.

Local switches are associated with the arguments which follow the program name (e.g., TSPLOT aaa/A). In options file mode, all of the local switches, except /A, which routes the display products on the RDC or SDC, are ignored. In command line mode, all of the options, except the choice of output products, are selected via local switches.

Local and global switches for each program are found in Parts B associated with each program discussed in Section 9 in this document.

In command line mode, the user does not execute the WPMAC macro. Instead, the programs are specified with global and local switches from either the Dasher, or from the ADM console using the AFOS command 'RUN:'. The user may also create his own macro which contains the AFOS commands with global and

local switches. This is advisable if the same products and options will be used repeatedly.

Profiler Product Inventory List

Products created by profiler programs are stored as AFOS products with the standard 9-character identification. The Appendix contains a list of product ID's, which represents all products that can be generated with the profiler software. All of these graphics products are in the format 'NMCGPHxxx', yielding the advantage of easy retrieval (i.e., only the 3-character ID 'xxx' needs to be entered for the retrieval of any product). Existing AFOS software also allows for convenient transfer from one office to another.

The seventh character of the 9-character ID designates the type of output product. A 'Z' denotes single station time section and hodograph products, and 'Y' indicates time section products derived from a triangle of stations. Cross section products contain an 'X' in this position, and plan view products contain a numerical value corresponding to the pressure level. For example, a 500 mb chart will have the format 'NMCGPH5xx'.

The weather or radar element being depicted is defined by the eighth character of the product ID for time sections, cross sections, and hodographs. For example, 'J' represents the v component of the wind, and 'P' represents the perturbation wind. The eighth character of the plan view product ID, however, is always the letter 'M'.

For time sections and hodographs, the last character of the 9-character product ID defines the station. Thus, '0' represents Platteville, CO, while 'L' represents Okolona, MS. Because cross sections can be represented by scores of combinations of profiler stations, the last character of the product ID is locally defined. In other words, '0' represents the first combination of stations which are user-selected at a specific office, and may represent a different combination of stations at another office. For plan view products, the ninth character of the product ID is equivalent to the eighth character for time section, cross section, and hodograph products. The characters were chosen in this manner to be as consistent as possible with standard conventions.

3. SET UP PROCEDURES

Topics covered in this section include allocating memory to the background partition, loading files from diskette onto user directories, adding products to the AFOS database, and using an automatic scheduler to execute the profiler software. These set up instructions are designed to guide the user through the initial orientation period, until he/she becomes more knowledgeable about the profiler software, and feels comfortable with tailoring the system to his/her needs. At that point, the user should refer to Section 4 (Tailoring the System).

A. Allocating Memory to the Background Partition

The wind profiler software makes use of the extended memory software features of Data General's (DG) RDOS system which allows faster execution speeds. Software running on any RDOS system may be run in either of two partitions--background or foreground. However, the foreground partition has

already been allocated to AFOS, which leaves the background partition for executing applications programs, such as the wind profiler software. In order to execute this software, you need to check the allocation of memory between the background and the foreground, because the profiler software requires as much as 128K words of memory.

The system will respond to the RDOS 'GMEM' command with the memory allocation between the background and the foreground, such as BG: 128 FG: 65. As long as the background allocation exceeds or equals 128K, you can continue with the next section. If the background allocation is less than 128K but the total memory is at least 192K, request that your AFOS System Manager (ASM) reallocate the memory. If your total memory is less than 192K, then this software can't be executed, because 64K memory is needed in the foreground for AFOS.

B. Adding Product Identifiers to the Data Key File

Before products can be stored in the database, the data key files which point to the locations of the products in the database must be edited to allow the product storage to occur. There are two methods to accomplish this task:

1) Request that your ASM run the program PILEDIT and EDITMERGE to update the database permanently, or

2) Use the AFOS command 'WISH:ADD'.

In either case, for incoming BUFR product NMCWPDERL, you must specify multiple versions of the product to be saved. You must save at least 4 versions, which represents one hour of data, since the incoming profiler data is split into four transmissions per hour when the entire network is operational. Ideally, 24 hours of data (96 versions) should be saved to ensure that a complete set of data will always be available to the product generating software after decoding, regardless of the number of hours between software executions. We recognize that 96 versions is not a viable choice for many stations whose disks have stored data which is nearing capacity. Therefore, we suggest that you save as many versions as is practical for your system. If you normally decode profiler data each hour, eight hours of data storage (32 versions) will provide a comfortable cushion for the vast majority of times against those unusual situations, where the software is not executed at its normal time. Sixteen hours of data (64 versions) will cover almost every situation.

Refer to Appendix A and locate the identifiers for each profiler product. Add to the database key files (via PILEDIT or WISH:) all the products for those stations and pressure levels which are of interest to your office. Specify a blank map background (if you don't already have one, NMCGPHB41 can be stored as NMCGPHBxx, where 'xx' represents an available background product ID) for each time section, cross section, and hodograph product, and North American map background (NMCGPHB02) for each plan view product. You may select to store as many versions of time section and cross section products as is practical for your system. However, plan view products, especially, can be animated (i.e., several consecutive versions can be displayed in an automatic looping sequence). Therefore, several versions of plan view products should be stored, if you wish to use animation (see Fors 1987).

Finally, add the preformat products (cccMCPWPD and cccWPDxxx), the message product cccWPDMSG, the blank map background (NMCGPHB41), and the map of the station network (NMCGPHWPD) to DATAKEY0, where 'ccc' is the local AFOS node identification, and 'xxx' is the local station identifier.

C. Downloading Software into the User Directory

Before the software can be used, it must be downloaded from the starter diskettes (see your ASM) into the appropriate directories, with links established from the main directory (e.g., SYSZ) to the user directories. The three starter diskettes contain five dump files (i.e., files created by the RDOS 'DUMP' command, each of which contains one or more files), and four additional products which belong in the AFOS database.

The WP1 dump file contains overlay files which require contiguous disk space. Using the RDOS 'LOAD' command with the '/R' and '/V' switches, load the files in WP1 into your user directory. The '/R' switch will replace any previous version of these overlay files, and the '/V' switch will verify that the loading process has successfully completed. Any problems with disk space are likely to appear at this point. If disk storage problems appear, the ASM must delete the files that have been loaded, and choose a different directory or create space in the current directory.

The WP2 dump file contains the executable save files corresponding to the overlay files from WP1. Load, verify, and replace the files from WP2 into your user directory. The WP3 and WP4 dump files contain the remaining software, which should also be loaded into your user directory.

The next set of files, which are associated with the decoded data, can grow to a size of 0.6 MB (1200 RDOS blocks), so you may wish to choose a different directory. Load, verify, and replace these files from WP5.

Four products need to be stored into the database. Store NMCGPHB41 and NMCGPHWPD. Store TDLMCPWPD as cccMCPWPD, and TDLWPDTDL as cccWPDxxx, where 'ccc' is the local AFOS node identifier, and 'xxx' is the local station identifier.

From the master directory, the following files must be linked to the appropriate user directory, unless they reside in the master directory: TSPLOT.OL, TSCON.OL, TSKIN.OL, CSPLOT.OL, CSCON.OL, PVPLOT.OL, PVCON.OL, HHPLOT.OL, WPDEC.SV, PWPCF.SV, TSPLOT.SV, TSCON.SV, TSKIN.SV, CSPLOT.SV, CSCON.SV, PVPLOT.SV, PVCON.SV, HHPLOT.SV, WPCON.SV, WPSET.SV, CWPCF.SV, WPSTAT, WPMAC.MC, GENUTF.SV, WP.CF, WPDATA, and WPCF.00. We also suggest checking the appropriate user directory for the existence of these files.

Finally, from the master directory, create additional links to the small files which are generated during the runtime processing: TCMAC.MC, TKMAC.MC, CCMAC.MC, PCMAC.MC, TSPLOT.AP, TSCON.AP, TSKIN.AP, CSPLOT.AP, CSCON.AP, PVPLOT.AP, PVCON.AP, and HHPLOT.AP.

D. Executing the Software

The starter system software received on diskettes contains files in which options have already been selected. In the preformat file, some stations have been selected to produce graphic products for each of the time section, cross

section, and plan view products. The default values have been selected for each of these products (see Figs. 18 through 20). Control file WP.CF has been created to request the decoding of all the currently on-line profilers for 24 hours, using options file WPCF.00, which contains the options from the preformat selections mentioned above.

Run the interactive program WPSET at the Dasher terminal. Choose the option that allows you to change the name of the message product, and change the name to match your local AFOS node identifier (cccWPDMSG). Now you can execute the runtime macro WPMAC to generate vector products and contour products for time sections, plan views, and cross sections. Upon completion of the programs, on the ADM, type DSP:TSPLOT.AP, which will indicate the 3-character product codes of the time section vector products generated. These products can be displayed on the GDM. Returning to the ADM, type DSP:TSCON.AP, which will indicate the product codes for the contoured products, displayable on the GDM, or DSP:TSKIN.AP which contains the product codes for the kinematic parameters created from a triangle of stations. Type DSP:CSPLOT.AP to find the product codes for cross section vector products, DSP:CSCON.AP to obtain a list of the product codes for the newly created cross section contoured products, DSP:PVPLOT.AP for the plan view vector products, DSP:PVCON.AP for the plan view contoured products, and DSP:HHPLOT.AP for the hodograph products. The threshold messages can be seen on the ADM by typing WPDMSG (see Fig. 24 for an example of this message).

E. Automatic Scheduling of the Software

The profiler software consists of two components (WPDEC and WPMAC.MC) which should be scheduled to be run at your office each hour after you begin to receive profiler product NMCWPDERL on the AFOS loop. An automatic scheduling program, such as WATCHDOG should be used to initiate them. In this manner, all of the data will be decoded, and the list of products chosen for you by the preformat and stored in WPCF.00 will be created and displayed.

Beginning with version 1.02, the decoder (WPDEC), upon completion, writes the current number of decoded versions of the input product (NMCWPDERL) to file WP.CF. This feature is especially useful when the product generating programs are executed on the automatic scheduler, because occasionally the transmission of the data from the Hub or the dissemination of data to the users on the RDC is delayed. When the current number of decoded versions is zero, which only occurs when there is no new data, executing the software is non-productive and an inefficient use of computer resources. Any product generating program executed with a /Q switch on an automatic scheduler will terminate if no new data was found during the decoding, thereby freeing the computer for other uses.

4. TAILORING THE SYSTEM

This section is designed for users who have become familiar with profiler software, and are ready to tailor the system to meet their specific requirements.

A. Selecting the Options for the Decoder Program

WPSET is the program which allows the user to change certain file names from default values to user-selected values. More importantly, WPSET allows

the user to change the stations and time periods for decoding. The default values are all WPDN profiler stations, and 24 hours. WPSET has the additional function of allowing the user to specify which WPCF.nn file to use as input to the profiler programs. WPCF.nn is the file resulting from the execution of CWPCF and contains the preformatted options from the preformat screen. The output file from WPSET (WP.CF) is used as input to the decoder program WPDEC, as well as to the product generating programs. After the initial execution during the installation of the starter system, WPSET is always an optional program. The following examples illustrate situations where WPSET is especially useful.

Changing the Number of Hours to be Decoded

Suppose a satellite WSO needs to generate only plan view plots. Unlike time section plots which require multiple hours for display, there is no need to save more than a few hours of data. Therefore, the user runs WPSET from the Dasher terminal and elects to save eight hours of data in the WPDATA file. Saving as many as eight hours allows the user the flexibility of displaying a plot from a previous hour, or displaying time difference plots. Eight hours of data will also allow the user to generate a time section plot with a smaller time window than the default.

The advantages to this selection are a reduction in the size of the decoded file and a slight improvement in the execution time of the graphics generating programs, since there is less data to process. Of course, there are disadvantages to this choice. The flexibility to generate a plan view plot from more than eight previous hours has been eliminated, and the ability to generate time section plots (perhaps in an emergency for another office) with more than eight hours of data has also been eliminated.

It is expected that this selection will be executed very infrequently. If the user chooses to increase the number of hours of data to be stored in the file (e.g., from eight to 24), the file size will increase each hour until the requested number of versions has been decoded. If this process is too slow, the user may delete the existing decoded file, which will allow the decoder to create a new file from the requested start time with all the requested data. This alternate solution will result in a noticeably longer execution time the first time that the decoder is run.

Changing the Stations to be Decoded

Suppose a user who runs only time section plots using decoded data from all 30 stations, realizes that he/she is never interested in more than 10 profiler stations. Therefore, the user executes WPSET from the Dasher terminal and specifies the character codes for 10 stations. In this manner, data is stored only for those 10 stations.

As in the previous example, there is a reduction in the size of the decoded file, an improvement in the execution time of the decoder, and a slight improvement in the execution time of the processing programs, which are processing smaller files. As before, the user loses the flexibility of generating products which require any other station, such as plan views.

This selection is also expected to be executed very infrequently. An increase in the number of stations will result in a longer decoder processing

time, especially the first time the decoder is executed after the change is made.

Changing the Extension of the WPCF.nn File

Suppose a user wishes to specify which WPCF.nn file to use in order to choose the products to be generated. You may recall that WPCF.nn is the reformatted options file from the preformat. It contains all of the options for each station or pressure level for each type of product. The user can quickly review his selections via program PWPCF. If several sets of options (and therefore several WPCF.nn files) which correspond to various forecast situations have been saved, it is much more convenient to run WPSET to select the appropriate WPCF.nn file than it is to repeatedly edit preformat screens. Therefore, the user executes WPSET from either the Dasher or the ADM console and selects the file number which contains this information.

This selection may be executed quite frequently, as the forecast situation changes and the products and stations of interest change.

B. Executing Software Manually

Executing software in command line mode is practical only when the user wishes to produce a small number of products. In this mode, the preformat screen is not used. Depending on the products desired, command line mode may be a multi-step process.

In command line mode, the user does not execute the WPMAC.MC macro, containing execution commands, which was supplied with the starter software. Instead, the user must specify the programs with global and local switches, from either the Dasher or the ADM console, using the AFOS command 'RUN:' (see Section 9, Part B for each program). Of course, the user may wish to create a new macro in order to produce the same products repeatedly.

C. Selecting Preformat Options

Choosing options from the preformat file is one of the most important functions in the profiler software system. Figs. 18 through 20 show the time section, cross section, and plan view preformat screens.

Time Sections

For time sections, you need to make several choices, the most important of which include the stations you wish to examine and the products you wish to generate. The station selections are at the bottom of page 1 of the screen. You may choose up to ten stations for any single-station product, and you may indicate different combinations of stations for different products.

Each station has been identified by five characters, the last two of which represent the state location (see Fig. 25). For example, Platteville is PLTC2. The first three letters uniquely identify the profiler location, and these three letters must be placed in the STATION SELECTION field. The number corresponding to these choices (1 through 4) must be placed in the STATION column next to the profiler product requested. In this manner, you can choose the stations and products desired. For the kinematic derivations which require three stations per product, choose your three stations which comprise

the triangle in the KINEMATIC STATION SELECTION field, and place the letter or letters corresponding to your choices (W, X, Y, or Z) in the STATION field next to these products.

Each time section will, by default, represent a graph of the lowest 7,250 m (24,000 ft). In order to begin the plotting at a different lower boundary, you can specify a different value (in hundreds of meters) in the BASE HT column next to the product of interest. By default, 16 hours will be displayed for any product, unless a different total number of hours is chosen in the HOURS # column. However, 16 hours is the maximum number you can display. Similarly, the ending hour is assumed to be the current hour, unless a different value is placed in the HOURS ENDING column.

For contoured products and alert thresholds, default values are listed in the legend at the bottom of the screen. These values can be changed by placing a different value in the corresponding fields that you wish to change.

By default, all horizontal wind values will be displayed. Numerical flags indicating winds which did not pass QC criteria will also be displayed. An 'N' in the FLAGGED DATA field will suppress the display of winds which did not pass QC criteria. Three products, thermal wind, wind direction shear, and wind speed shear are computed from two levels of wind, where the interval is selected by the user in the HEIGHT INTERVAL field. The default of 4 height intervals (1,000 m) between levels represents a reasonably large interval which portrays significant wind changes within the layer. Other height intervals may be chosen within a range of one to 16 levels.

Cross Sections

The most important choices for the cross section displays are the station groups you select and the products you wish to display. Similar to the time sections, you need to indicate which stations you would like to display in the STATION SELECTIONS field. You may choose from four to eight stations for each cross section. The letters (W, X, Y, or Z) associated with each station group are then indicated in the STATION GROUPS field next to each product requested.

The default values for each product are listed in the lower left corner of the preformat screen. The default for the base height is mean sea level, which will display the lowest 7,250 m. You may change this value by indicating (in hundreds of meters) the height at which you wish to start plotting in the BASE HT field next to the requested product. Each display contains one hour of data, with the default being the last decoded hour. Any alternate hour within 24 hours prior to the last decoded hour may be chosen in the HOURS field.

The default contour interval for each contoured product is indicated on the screen. These values may be changed by choosing an alternate value in the CONTOUR INTERVAL field. The horizontal wind values will be displayed with a numerical flag indicating winds which did not pass QC criteria. The display of these winds may be suppressed by placing an 'N' in the FLAGGED DATA field. The thermal wind height interval, with a default value of four levels (1,000 m) may be chosen by indicating the number of height levels which constitute the layer for this product. Other height intervals within a range of one to 16 levels may be selected.

Plan Views

The most important choices for plan view displays are the pressure levels and the products you wish to display. The pressure levels which can be chosen are 200 (2), 300 (3), 400 (4), 500 (5), 600 (6), 700 (7), and 850 (8) mb, and 500 (A), 750 (B), 1,000 (C), and 1,250 (D) m AGL. Surface data (0) can also be chosen. You may indicate as many as eight pressure levels and four different combinations of levels by placing the number corresponding to each pressure level, or letter corresponding to each height level, within any of the four groups in the PRESSURE LEVEL SELECTIONS field of the preformat (see Fig. 20). The field number corresponding to one of these choices may then be placed in the PRESSURE LEVELS column next to the profiler product requested. Using this method, you can choose the products to create and the pressure levels at which to view them.

The default values used in the creation of each product are also indicated near the bottom portion of the screen. The default for the hour to be displayed is the current hour, but this may be changed by choosing any hour within the last 24 hours prior to the current hour in the HOUR column. You may also select the time interval to use in computing time difference values. Under default conditions, the time difference will be three hours, but any time interval may be chosen, provided that the requested hours are still accessible within the 24 hours stored in the database, by placing the interval in the # HOURS DIFF field.

Each contoured product has its own default contour value indicated by the letters A through D in the CONTOUR INTERVAL field. These letters correspond to the default values found at the lower left of the screen. The values may be changed in the CONTOUR INTERVAL field. Note that divergence and vorticity selections are multiplied by 10^{-5}.

As with time and cross sections, all horizontal wind values will be displayed with numerical flags indicating winds which did not pass QC criteria. In order to suppress the display of these winds, place an 'N' in the FLAGGED DATA field. The thermal wind interval, with a default value of 4 (1000 m), may also be changed from 1 to 16 by indicating the number of layers to use in computing the height interval for this product.

D. Saving Preformat Options

Program CWPCF allows the user to save control file WPCF.nn, by giving it a numerical extension. In this manner, multiple control files with different extensions can be saved on disk for future retrieval. Each control file can represent a different set of products and options which is typically useful under a particular weather regime. For example, under southwesterly flow, it might be desired to create some products from profilers located to the southwest. However, with northwesterly flow, a different set of products may be desired. Each of these regimes, associated with a different set of requested products, can be saved as separate control files. After CWPCF has been executed a few times, the need to reedit the preformat will be eliminated or reduced. Program WPSET allows the user to choose one of the WPCF.nn files created by the preformat and saved by CWPCF.

E. Executing Software at Alternate Locations (WSO's)

As the profiler software system expands, forecasters may discover that there is not enough time to produce all the products that they wish to examine. In response to this limitation, the software was designed in modules so that, for example, the cross sections can be run at the WSFO, while the time sections can be run at one WSO, and the plan views at another WSO. There are no restrictions to the manner in which the workload can be divided. Each system manager can decide the best method by which to distribute the workload. One advantage to storing AFOS database products is the ease with which these products can be transmitted to other offices. A local switch enables database products to be routed either on the RDC or SDC.

5. DESCRIPTION OF PRODUCTS

A. Time Sections

Time series plots of profiler wind data provide the meteorologist with a display of the vertical structure of the wind with good temporal resolution. This is unlike any display possible before the advent of the profiler.

The background format of time section products consists of a graph with height plotted on the vertical (y) axis, and time plotted along the horizontal (x) axis. The height is labeled in two different manners--actual height of the measurement above sea level (in both km and kft), and the corresponding pressure levels for a standard atmosphere. The base height which appears on the graph is user-selectable. After the user selects the base height, all the data which can fit onto the display (as much as 7,250 m (24,000 ft) above the base height) is plotted. The number of hours (from one to 16) is also user-selectable. The default selections consist of displaying the lower level of the atmosphere, starting with a sea level base height, and 16 hours of data. The station name, time, and date are also plotted from information obtained from the decoded data file in order to label the display.

Standard wind symbols representing speed and direction are plotted on a time versus height graph for each selected hour and height interval for these products: wind velocity, thermal wind, and perturbation wind.

Contours of numerical values are plotted on a time versus height graph for each selected height interval and time period for these products: wind speed; u, v, and w wind components; wind speed and direction shear; vorticity, divergence, and vertical velocity. Data which fail either of the QC checks are rejected from the analysis. Where data are missing or rejected, the acceptable values are interpolated in time, using a cubic spline method, to complete the grid. Then the data are smoothed with a 9-point filter applied to both the height and time dimensions (Shapiro 1970). Contours are drawn from this gridded data field, based on a default contour interval, which varies by product. The user can choose a replacement contour interval. However, the contouring program will override either the default or selected interval, if the number of contours is either too small or too large.

B. Cross Sections

Cross section plots of profiler wind data are designed to provide a display of wind data from stations located along a vertical plane. The resulting

display enables the meteorologist to view the wind pattern in two dimensions at a selected hour.

The background format of the cross section products is similar to that used for time sections. As before, the height is plotted on the vertical (y) axis and labeled in two different manners: actual height of the measurement above sea level (km and kft), and the corresponding pressure levels for a standard atmosphere. The horizontal axis differs from time sections by representing the horizontal distance along the vertically-oriented cross section plane. This axis does not display a distance in absolute units, but represents the relative distances between stations proportional to their projected Cartesian coordinate positions along the cross section plane.

The base height at which to begin displaying data is user-selectable, with the default being at mean sea level. When selecting a different base height, you should remember that each station is located at a different elevation, and the lowest level of measured data above sea level may vary significantly. One hour of data which is selected by the user is displayed for each station for each product. The default hour is the most recently decoded hour.

The profiler data from each station are depicted by using the standard wind symbol representing wind direction and speed. These vector symbols are plotted with height above the location of each station along the horizontal axis. This method is used for displaying the wind velocity and the horizontal wind products.

Contours of the numerical values of the parallel and perpendicular components of the wind to the plane of the cross section are plotted for each selected height interval and hour. Similarly, contours are plotted for the w component of the wind, and returned power. A grid is developed from valid data, and a cubic spline interpolation scheme (Barker 1987) is used to interpolate for missing and rejected values, and to create grid fields. Then, the data are smoothed, using the 9-point filter described in the previous section. The default contour interval which varies by product, can be replaced by a user selection. However, the contouring program will replace either of these intervals if the number of contours is too small or too large.

C. Plan Views

Plan view plots of profiler wind data provide the meteorologist with a horizontal view of the wind and related data at various standard pressure levels.

The background format of plan view products is the AFOS North American map background, a polar stereographic projection, centered at 105° W longitude. The pressure level selected by the user creates a horizontal plane depicted at a height which corresponds to the pressure-height relationship in a standard atmosphere. The wind components are then selected at the level closest to the corresponding height.

One hour of data which is selected by the user is shown for all stations, with the default being the current or most recently decoded hour. The user may optionally request any hour within the previous 24 hours. Standard wind symbols representing station wind direction and speed are plotted at their respective locations on the map background for both horizontal wind velocity

and thermal wind products. Surface data may be displayed as a horizontal wind velocity selection, but is depicted as a station plot showing symbols of wind direction and speed, as well as hourly values of pressure (mb), temperature (°F), dewpoint temperature (°F), and rainfall (in).

Contours of numerical values are plotted with the WPDN area on the map background for each selected pressure level at the requested hour for these products: wind speed; w component; vorticity; divergence; returned power; and time differences of divergence, vorticity, and u, v, and w components. The numerical values to contour are obtained from a grid field created by executing an objective analysis (OA) routine (Glahn et al. 1985) on the station data. Bergthorssen and Doos (1955), and Cressman (1959) describe objective analysis techniques upon which this scheme is based. Data which failed QC checks are rejected, but those data which did not undergo QC checks are subjected to an alternate check in this routine. As with the other types of products, contours are drawn from the field of gridded data, based on the default contour interval for each product. The user may choose a replacement interval, but the contouring program will override either the default or selected interval, if the number of contours is either too small or too large.

D. Hodographs

The hodograph is a tool which meteorologists employ to show not only the vertical structure of the horizontal winds at any given time, but also the wind shear. Hodographs are very useful in short-term severe storm forecasting (Davies 1989). The wind profiler hodograph displays were based on the software developed and described in the SHARP Workstation User's Manual (Hart and Korotky 1991).

The background format of the hodograph plot consists of a graph with the u (east-west) component of the wind speed plotted along the x-axis, and the v (north-south) component plotted on the y-axis. Both axes use the same wind speed increment and scale for a given hodograph, but a new scale is calculated for each new hodograph, based on the maximum wind components for that plot. The default hour used for each plot is the most recent hour stored in the WPDATA file. However, the user may override this default value via a local switch.

The hodograph product is produced by connecting the end points of each 250-m wind vector in the lowest 6 km of the atmosphere. Surface data are obtained from the PSOS instrumentation, if available, or from Ekman spiral calculations, based on the 1000-m profiler wind components. However, by using switches, the forecaster may override either of these two choices by specifying a surface speed and direction. In addition to the hodograph, the mean wind vector for the lowest 6 km, and the storm motion vector are plotted. The storm motion vector is calculated by the program if no switches are specified. Alternatively, the user may specify the storm motion speed and direction as input to the calculations which appear to the left of the hodograph plot. There are several calculated wind elements which appear to the left of the plot. These elements, which are valuable to severe storm forecasting (Davies-Jones and Burgess 1989), include positive and negative components of the wind shear, storm inflow vectors at selected heights and height intervals, streamwise vorticity, and, most importantly, helicity.

6. UTILITY OF PRODUCTS

A. U and V Wind Components

The u component of the wind represents the speed in the x-direction (Fig. 26), and the v component represents the speed in the y-direction (Fig. 27). These contoured time section products are useful in detecting frontal passages, especially in the vertical, and in detecting the depth of thermal layers.

B. Time Differences of the U and V Components

The time differences of the u and v components represent the changes in these components, which are displayed separately in a plan view format (Figs. 28 and 29), and computed for a selected time interval, with a default interval of three hours. A grid field, obtained by objectively analyzing the station data, is used to create the contoured product. Positive values indicate an increase in each component with time, while negative values indicate a decrease with time. The user may choose the contour interval, which has a default value of 10 kt. These products can help to locate frontal zones, jet streaks, and regions of convergence and divergence.

C. Wind Velocity

Horizontal wind velocity is computed directly from the u (east-west) and v (north-south) wind components (See Figs. 30 through 32). These plots, developed in all three formats (time section, cross section, and plan view), can be used to determine the location, passages and slopes of fronts, troughs, and ridges, and to identify jet streams and mesoscale circulations. They are useful in forecasting upslope snow events (Zamora et al. 1987), indicating the depth of the thermal layers, and in enhancing constant-level charts generated from National Meteorological Center (NMC) model output. They can also be used to detect the mature or decaying stages of a Mesoscale Convective Complex (MCC) (Maddox 1983), and in forecasting surface winds during cold air damming episodes (Dunn 1987).

Values that did not pass the QC criteria during processing at the Hub (Brewster 1989) are marked with a '1' at the base of the wind symbol. This indicates that either the vertical shear test or the median check was not performed or failed at that level. Alternatively, the user has been given the option to display only the data which passed the QC checks.

D. Wind Speed

Derived from the u and v components of the horizontal wind, these scalar contoured products, depicted either on a time section or plan view background (Figs. 33 and 34), can be used to locate jet streaks and jet streak passages, identify low-level jets, and update NMC model output. When time section contoured products are created, a message is generated for wind speeds that exceed threshold values for the most recent hour to alert the forecaster to a potentially significant event. The default value for this alert is 100 kt.

E. Streamlines

Streamlines, which represent the tangent to the instantaneous wind direction at a point, depict the direction of the wind flow independent of the speed (See Fig. 35). The u and v components are objectively analyzed on a grid associated with a North American (plan view) map background, and used to compute components normalized to a desired displacement magnitude. The components of displacement are computed by finding the ratio of the u and v components to the wind speed and multiplying by a desired displacement value. Each streamline is constructed as if it were a series of points being connected with a smooth curve in both forward and backward directions, using the displacement components (Whittaker 1977). A 16-point Bessel interpolation is used to find the next point in the line, except that quadratic and linear interpolation are also used near grid borders.

Streamlines are useful in locating centers of cyclonic and anticyclonic flow, and for finding lines of strong convergence and divergence. Streamlines can also be used in conjunction with other products to locate regions of positive vorticity advection (PVA), negative vorticity advection (NVA), thermal and moisture advection, and jet streaks.

F. Hodographs

A hodograph, which connects the end points of individual wind vectors with height, readily depicts the veering or backing of the wind (See Fig. 36). A veering wind, in the presence of other favorable meteorological conditions, is often a precursor to severe weather. Several other wind elements are also calculated and listed on the plot to the left of the hodograph: positive and negative wind shear; storm inflow vectors at selected heights and layers; streamwise vorticity; and storm-relative helicity. The wind shear is divided into positive and negative components. In severe storms forecasting, the positive shear is important because it contributes to updraft rotation. The strength of the storm inflow, which is the flow experienced by a storm as it moves through a given environment, also strongly influences updraft rotation. For a given storm motion, streamwise vorticity refers to the component of the horizontal vorticity parallel to the storm inflow. Streamwise vorticity represents the amount of vorticity available to be translated into a rotating storm updraft. Finally, storm-relative helicity is the sum of the streamwise vorticity values through the storm inflow layer. Storm-relative helicity measures the rotation realized by a storm moving through its environment.

G. Orthogonal Wind Components

The wind components parallel (Fig. 37) and perpendicular (Fig. 38) to the plane of the selected cross section are developed by rotating the east-west axis to match the direction of the cross section. These contoured products are useful in showing air mass advection, vertical depth of air masses, fronts, and locations of jet streams.

H. Wind Speed and Wind Direction Shear

Time section plots of vertical wind shear represent the difference in speed or direction from one level of the atmosphere to another. In the speed shear plots (Fig. 39), positive values indicate the normally expected increase of the wind speed with height, while negative values indicate a decrease with

height. Positive direction shear values (Fig. 40) indicate veering (change in a clockwise direction) with height, while negative direction values indicate backing (change in a counterclockwise direction) with height. Calculations are made with the assumption that the wind direction will not vary by more than 180 degrees between levels, because it is impossible to determine a direction change greater than 180 degrees. For example, a wind veering by 185 degrees has the same appearance as a wind backing by 175 degrees. These time section contoured products are calculated after the wind speeds and wind directions for each level and time are determined from the u and v components of the wind. These products are important in detecting the mature or decaying stages of an MCC, forecasting the intensity of thunderstorms, forecasting possible clear air turbulence (CAT), estimating the horizontal temperature gradient within a layer, and calculating the bulk Richardson number as an indicator for long-lived storms (Neiman 1987).

The default contour intervals are larger than for most products (10 kt and 40°), since smaller values of these measurements are probably not significant. Direction shears which exceed threshold values alert the forecasters to a potentially significant event. The default threshold value is 40°.

I. Thermal Wind

The thermal wind is the vector difference between two levels of geostrophic winds. Although profilers measure the actual wind, the ageostrophic contribution to the actual wind is generally small, allowing time section, cross section, and plan view plots of differences of the actual wind to approximate the thermal wind (Figs. 41 through 43). Winds that back with height indicate cold advection in that layer; winds that veer with height indicate warm advection. The thermal wind blows parallel to thickness lines, with cold air to the left of the direction of flow. With this information, one can obtain not only layers which are warming or cooling, but also the location of the cold or warm air.

For these three product types (time sections, cross sections, and plan views), standard wind symbols representing the thermal wind are displayed at a user-selectable height interval with the type of advection indicated at the base of the symbol.

For time sections, vertical 5-point smoothing (Neiman 1987), rather than the 9-point smoothing used by the other products, is applied to the wind measurements to filter out unwanted features. This filter is applied to the two range gates above and two range gates below the central value. The letter 'c' is plotted at the base of the wind symbol to indicate a layer of cold advection, and the letter 'w' is similarly plotted to indicate warm advection. The default time period and atmospheric depth are the same as those mentioned for the previous time section products.

J. Perturbation Wind

Time sections of the perturbation wind (Fig. 44) depict the vector departures from the prevailing mean velocity, calculated in the following manner. Measured u and v components at each height are time averaged. The number of hours which comprise this average is the maximum number of hours in the decoded file, which is normally 24. Then, these time averaged wind components are subtracted from the hourly wind components at each corresponding height.

The perturbation wind exaggerates small changes in the flow, which makes most small features readily apparent. Passages of trough and ridge axes are more obvious. The slopes of these troughs and ridges can readily be determined, while the passage of a vorticity maximum can often be seen.

In addition to the perturbation wind values, the average wind vectors are plotted on the right side of the graph. The average wind takes the place of the 16th hour. Therefore, this product's maximum number of displayable hours is 15, unlike the other time section products. The veering or backing of the mean wind indicates the average temperature advection with height.

K. Derived Absolute Vorticity

Vorticity represents the rotation of a wind field (i.e, the angular velocity of a wind particle about a local axis). Positive vorticity advection increasing with height is associated with divergence aloft and rising vertical motion through that layer. Rising vertical motion in the presence of sufficient moisture results in clouds and precipitation. For time sections, vorticity and the other parameters which define the linear kinematic properties of the wind flow field are obtained by using matrix algebra. The u and v wind components of each of three profiler stations positioned in a triangular arrangement is multiplied by a matrix containing the x and y displacements of the three stations from the centroid of the triangle. Time sections indicate quite clearly the vertical structure of vorticity (Fig. 45), which is unlike any other vorticity display currently in use. This is useful in estimating positive vorticity advection increasing with height, which often results in precipitation.

Only winds which pass all the QC checks are used in the calculations to develop the time section products. In order to contour the data, the wind field is smoothed with the 9-point smoother mentioned previously. The contour interval is user-selectable, with a default contour interval of 0.00004 s^{-1}. Although the computational program which calculates vorticity values will accept any three stations that aren't located in a straight line, for best results, the user is advised to choose three stations that approximately form an equilateral triangle. Moreover, to obtain relative vorticity values with a scale that is closest to the NMC NGM-model values, choose stations that are in very close proximity to each other.

For plan view displays, values of vorticity are calculated for each grid point in the display area by using a finite differencing scheme (Fig. 46). A finite difference operator is used to find the change in the u and v components in the x and y directions at each grid point by taking the difference between the two adjacent grid points and dividing by twice the grid length. The relative vorticity at each grid point is then computed by subtracting the change in the u component in the y direction from the v component in the x direction. The resultant contours display the spatial distribution of the vorticity field within the profiler network.

Wind component data which did not undergo one or both initial QC checks is subjected to a spatial QC check, by comparing the station data against the current grid analysis, as part of the OA routines in the plan view software. The vorticity field is smoothed with a 5-point smoother. The contour interval is user-selectable, with a default contour interval of 0.00004 s^{-1}.

Plots of vorticity can assist in identifying regions of positive and negative vorticity advection, forecasting thunderstorms and MCC's (Dunn 1986), and detecting frontal passages.

L. Derived Divergence

Divergence (convergence) represents expansion (contraction) of a wind field; i.e., the export (import) of mass within a fixed volume. Persistent lower-level convergence and upper-level divergence result in vertical motions which tend to change the stability of an air column, as well as producing or dissipating clouds. On a time section plot, divergence, like vorticity and the other parameters which define the linear kinematic properties of a wind field, are obtained by using matrix algebra. However, the calculated divergence values are adjusted according to a modified O'Brien scheme (Dallavalle 1973), so that in any given layer, divergence approximately balances convergence. Time sections and plan views of divergence, as well as vorticity, are useful in detecting frontal passages and forecasting thunderstorm and MCC development.

Only winds which pass all the QC checks are used in the calculations to develop the time section product (Fig. 47). The 9-point smoother used for some of the previous products is used in the calculations to develop the divergence field, with a contour interval selected by the user, or a default value of 0.00004 s^{-1}. As with vorticity, it is best to choose stations which define a triangle that is nearly equilateral, and are as close to each other as possible.

For plan view displays (Fig. 48), the divergence values at each grid point are computed using a finite differencing scheme similar to that used to compute vorticity. The divergence at each grid point is calculated by adding the change in the u component in the x direction to the change in the v component in the y direction. The resulting contoured grid field provides a spatial distribution of the divergence field within the profiler network.

M. Time Differences of Absolute Vorticity and Divergence

The time differences of vorticity and divergence (convergence) represent the amount of change in the vorticity and divergence field values for a given time period (See Figs. 49 and 50). These contoured plan view products are computed by using the same method as is used for computing the plan view vorticity and divergence fields, except that the time differences of the u and v components are used instead of the actual components. A positive time difference value means that the data values are changing toward a maximum or positive value (vorticity or divergence maximum), whereas a negative value indicates that the data values are changing toward a minimum or negative value (vorticity minimum or convergence). It is important to note that the values of the actual fields of both products should be considered in order to gain a proper perspective of the meaning of the changes. The user is able to choose the hour difference and the contour interval, but default values of three hours and 0.00004 s^{-1}, respectively, are provided. These products can be used to track the occurrence and rate of PVA and NVA, and for locating areas favorable for the development of rain and thunderstorm activity.

N. Derived Vertical Velocity

Using the time section computed values of horizontal divergence, which are valid for the area defined by a triangle of stations, calculations of the mean vertical velocity are obtained by integrating the divergence form of the continuity equation (Fig. 51). These vertical velocity values were also adjusted according to the modified O'Brien scheme described previously for divergence values.

Time sections of derived vertical velocity are useful in forecasting precipitation intensity and thunderstorm development. The derived vertical velocity differs from the actual measurement in that actual measurements will have imbedded velocities of all time scales, which will probably be significant considering the normal range of values and the accuracy of the instrumentation. Some of these time scales are not important to the user and tend to mask the features of interest. However, actual measurements will also indicate important motions that will not appear in the calculations (Nastrom 1984).

Contours of derived vertical velocity are displayed on a time versus height graph, with time periods and height intervals selected by the user, and default values as listed above. Calculations are based on the gridded array of divergence values. The 9-point smoother used in previous products is also used here before contouring at a default interval of 10 cm/s or other selected interval.

O. W Wind Component

The w wind component, depicted for time section, cross section, and plan view product types, represents the measured vertical velocity, with positive values indicating rising motion and negative values indicating sinking motion (Figs. 52 through 53). It is this rising motion which is central to the forecast problem of clouds and precipitation. However, this is a new product with very few guidelines at this time for interpreting the information. It is possible that small-scale (gravity wave) fluctuations in the vertical velocity will contribute significantly to the hourly average measurements, making interpretation of the data difficult on this time scale. Longer time-scale averages, however, should reveal a good correlation between vertical velocity and precipitation. Values of vertical velocity may be useful in forecasting warm frontal passages, intensity and type of precipitation, and thunderstorm development (Gage and Nastrom 1985). The transverse circulations around the jet core may become apparent from vertical velocity measurements. Moreover, one can update NMC model guidance forecasts.

P. Time Differences of the W Component

The time differrence of the w wind component represents the change in the measured vertical velocity over a given time interval (Fig. 54). Similar to other plan view contoured products, the data field is obtained by objectively analyzing the station data. Positive changes in the w component indicate that the rate of rising motion is increasing, or the rate of sinking motion is decreasing. Likewise, negative values indicate that the rate of rising motion is decreasing, or the rate of sinking motion is increasing. The user may select values for both the time and contour intervals, with default values of three hours and .00004 s^{-1}, respectively. This product can be useful for

determining cloud patterns, locating frontal zones, and forecasting the development and intensity or rain and thunderstorm activity.

Q. Returned Power

The spectral peak power represents the strength of the returned radar signal in the vertical. Since the signal will diminish with height, the data have been normalized to account for this decrease. Returned power products in all three formats (Figs. 55 through 57) are useful in detecting frontal zones and the tropopause, and forecasting warm frontal passages. They might also prove to be useful in detecting the formation and evolution of rain bands, and in predicting the beginning of vorticity and cyclogenesis.

R. Profiler Data Uses

The advent of the WPDN brings a new era in upper air wind measurements. Never before has there been such a spatial and temporal resolution of wind data available for use in weather forecasting. Because the analysis of this data is in its infancy, there are some drawbacks in addition to the obvious benefits of excellent data coverage. The data are so new that there does not exist a vast wealth of knowledge in interpreting the product output. Brady and Brewster (1989), and Jewett and Brady (1989) have written training manuals on interpreting profiler data for the warm season and the cool season, respectively. However, they were restricted to the data that were available to them from the Colorado mini-network, and many of the uses that they found may not be valid in other parts of the country. Moreover, this software produces many more profiler products than were available at the time the manuals were written. Be mindful that this document is being published during the profiler assessment period, and input from the forecasters is crucial to this assessment.

The following list was compiled to serve as a guideline for the uses of the above products, along with the displays which are most helpful. At times, the displays are most informative when used in conjunction with existing short-term model analyses or output.

1. Use: Locate troughs, ridges, fronts, and the tropopause.
   Displays: Wind velocity, perturbation wind, vertical velocity, returned power, streamlines, time difference of u and v wind components, and divergence.

2. Use: Possibly predict the development of vorticity and cyclogenesis.
   Display: Returned power, time difference of vorticity and divergence, w wind component, and streamlines.

3. Use: Indicate the depth of a cold layer.
   Display: Wind velocity.

4. Use: Locate jet streaks and jet streak passages.
   Display: Wind speed.

5. Use: Detect possible formation and evolution of precipitation bands.
   Display: Returned power, w wind component, time difference of w wind component.

6. Use: Identify depth of moist layer.
   Display: Returned power.

7. Use: Forecast cell growth of thunderstorms.
   Displays: Wind direction and speed shear, w wind component, time difference of w wind component, divergence, vorticity, time difference of divergence and vorticity, hodograph.

8. Use: Identify low-level jets to forecast conditions favorable for thunderstorms.
   Displays: Wind velocity, wind speed, streamlines, time difference of u and v components.

9. Use: Forecast upslope snow events during cold air damming episodes.
   Displays: Wind velocity, thermal wind.

10. Use: Forecast possible CAT.
    Displays: Wind direction and wind speed shear.

11. Use: Identify subsynoptic scale circulations.
    Display: Perturbation wind, streamlines.

7. CAUTIONS AND RESTRICTIONS

The user should be aware of the following limitations when using the profiler software package:

1. Most of the programs in this package use the extended memory features of the operating system. Before using this software, ensure that 28K of memory has been partitioned to the background. The RDOS 'GMEM' command will verify the partitioning of both grounds.

2. The WPCF.nn file, which contains the options from the preformat screen, also contains additional information required by the graphics generating programs, regardless of the mode in which the programs are executed. The program WPSET, which allows the user to point to the desired WPCF.nn file must contain the 'nn' extension of an existing WPCF.nn file.

3. The WP.CF file, which accompanies the starter diskettes, is set to generate alert messages to be stored in AFOS product cccWPDMSG. Using program WPSET from the Dasher terminal, change the 'ccc' to match your local AFOS node identifier.

4. The contouring programs (TSCON, TSKIN, CSCON, and PVCON) swap to program WPCON to create the contour file. These programs (and all other programs which use the RDOS swap feature) can be executed while the automatic scheduler WDOG is running, but not from the CLI level of WDOG (WDX).

5. There is not enough time to generate every product each hour. Using the time estimates in Section 9, select a variety of products for the amount of time you can afford to spend. It is also a wise practice to divide the work load among WSFO's and satellite WSO's.

6. The range of vorticity and divergence values obtained from program TSKIN is smaller than that seen from NMC model graphics, primarily because the TSKIN grid spacing is larger.

7. Choosing a value for any option which exceeds acceptable limits will result in a rejection of that value, and a return to the default value.

8. The program PVCON, which contours plan view products, requires a representative sample of profilers from the entire WPDN to yield meaningful information.

9. Try to avoid choosing a contoured product cross section with large gaps between stations, since this creates a data sparse area on the display, which renders the interpolation scheme less realistic.

8. REFERENCES

Barker, T. W., 1987: Convective cross section analysis. Western Region Computer Programs and Problems NWS WR CP No. 55, National Weather Service, NOAA, U.S. Department of Commerce, 34 pp.

Bergthorssen, P. and B. R. Doos, 1955: Numerical weather map analysis. Tellus, 7, 329-340.

Brady, R. H. and K. A. Brewster, 1989: Profiler Training Manual #3, Subjective Uses of Wind Profiler Data in Warm Season Analysis and Forecasting. Environmental Research Laboratories, NOAA, U.S. Department of Commerce, 103 pp.

Brewster, K. A., 1989: Profiler Training Manual #2, Quality Control of Wind Profiler Data. Environmental Research Laboratories, NOAA, U.S. Department of Commerce, 39 pp.

Cressman, G. P., 1959: An operational objective analysis system. Mon. Wea. Rev., 87, 367-374.

Dallavalle, J. P., 1973: Diagnostic case study of anticyclogenesis. Master's Thesis, State University of New York, Albany, NY, 128 pp.

Davies, J. M., 1989: On the use of shear magnitudes and hodographs in tornado forecasting. Preprints, 12th Conference, Weather Forecasting and Analysis, Monterey, Amer. Meteor. Soc., 219-224.

Davies-Jones, R. and D. Burgess, 1989: Test of helicity as a tornado forecast parameter. Preprints, 16th Conference, Severe Local Storms, Kananaskis Park, Alberta, Canada, Amer. Meteor. Soc., 588-592.

Davis, R. A., 1983: PMOD plotting system for AFOS. NOAA AFOS Operations Division Computer Programs NWS AOD CP 83-1, National Weather Service, NOAA, U.S. Department of Commerce, 131 pp.

Dunn, L., 1986: An example of subjective interpretation of network profiler data in real-time forecasting. Wea. Forecasting, 1, 219-225.

_____, 1987: Cold air damming by the Front Range of the Colorado Rockies and its relationship to locally heavy snows. Wea. Forecasting, 2, 177-189.

Fors, J., 1987: Animation of AFOS Graphics. Western Region Computer Programs and Problems NWS WR CP No. 27, National Weather Service, NOAA, U.S. Department of Commerce, 17 pp.

Gage, K. S. and G. D. Nastrom, 1985: Relationship of precipitation to vertical motion observed directly by a VHF wind profiler during a spring upslope storm near Denver, Colorado. Bull. Amer. Meteor. Soc., 66, 394-397.

Glahn, H. R., T. L. Chambers, W. S. Richardson, and H. P. Perrotti, 1985: Objective map analysis for the local AFOS MOS program. NOAA Technical Memorandum NWS TDL 75, National Oceanic and Atmospheric Administration, U.S. Department of Commerce, 34 pp.

Hart, J. A. and J. Korotky, 1991: The SHARP Workstation v1.50. WSFO Charleston, National Weather Service, NOAA, U.S. Department of Commerce, 62 pp.

Jewett, B. F. and R. H. Brady, 1989: Profiler Training Manual #4, Subjective Uses of Wind Profiler Data in Cool Season Analysis and Forecasting. Environmental Research Laboratories, NOAA, U.S. Department of Commerce, 92 pp.

Maddox, R. A., 1983: Large-scale meteorological conditions associated with midlatitude mesoscale convective complexes. Mon. Wea. Rev., 111, 1475-1495.

Nastrom, G. D., 1984: Detection of synoptic-scale vertical velocities using an MST radar. Geophys. Res. Lett., 11, 57-60.

Neiman, P. J., 1987: Wind profiler-derived temperature gradients and advections. Master's Thesis, The Pennsylvania State University, University Park, PA, 214 pp.

O'Brien, J. J., 1970: Alternative solutions to the classical vertical velocity problem. J. Appl. Meteor., 18, 85-91.

Schneider, W. R. and C. C. Peterson, 1988: Watchdog Program. Western Region Computer Programs and Problems NWS WR CP No. 57, National Weather Service, NOAA, U.S. Department of Commerce, 13 pp.

Shapiro, R., 1970: Smoothing, filtering, and boundary effects. Rev. Geophys. Space Phys., 8, 359-387.

Van de Kamp, D. W., 1988: Profiler Training Manual #1, Principles of Wind Profiler Operation. Environmental Research Laboratories, NOAA, U. S. Department of Commerce, 49 pp.

Whittaker, T. M., 1977: Automated streamline analysis. Mon. Wea. Rev., 105, 786-788.

WMO, 1988: Manual on Codes, Vol. 1, Part B--Binary Codes. WMO No. 306, World Meteorological Organization, Geneva, 43-173.

Zamora, R. F., M. A. Shapiro, and C. A. Doswell III, 1987: The diagnosis of upper tropospheric divergence and ageostrophic wind using profiler wind observations. Mon. Wea. Rev., 115, 871-884.

9. PROGRAM INFORMATION AND PROCEDURES FOR INSTALLATION AND EXECUTION

CREATE WIND PROFILER CONTROL FILE

PART A: PROGRAM INFORMATION and INSTALLATION PROCEDURE

PROGRAM NAME: CWPCF

AAL ID: GPH031
Revision No.: 01.04

PURPOSE: Create the wind profiler control file (WPCF). The WPCF holds information needed by the application programs developed for the wind profiler system.

PROGRAM INFORMATION:

Development Programmer:

Mark A. Leaphart

Location: Techniques Development Laboratory

Phone: 301-713-0056

Language: FORTRAN IV/Rev 5.57
Macro Assembler/Rev 6.30

Maintenance Programmer:

Gary F. Battel

Location: Techniques Development Laboratory

Phone: 301-713-0056

Type: Standard

Save file creation dates: CWPCF.SV

Original release/Rev 01.00	- January 6, 1990
First revision/Rev 01.01	- May 10, 1990
Second revision/Rev 01.02	- October 12, 1990
Third revision/Rev 01.03	- March 29, 1991
Fourth revision/Rev 01.04	- August 14, 1991

Running time: 9 seconds

Disk space:	Program files	- 47 RDOS blocks
	Data files	- 8 RDOS blocks

PROGRAM REQUIREMENTS

Program Files:

NAME

CWPCF.SV

Data files:

NAME:	Disk location	READ/WRITE	COMMENTS
WPCF.nn	User directory	W	The output wind profiler expanded options file. You can create and save multiple files. Extension 'nn' is a numerical indicator for the

NAME:	Disk location	READ/WRITE	COMMENTS
			file, which may range from '00' to '99'.

AFOS files:

ID	ACTION	COMMENTS
cccMCPWPD	Read	The preformat screen. The 'ccc' is obtained from the SKEL file.
cccWPDxxx	Stored	Holds data from the preformat screen. The ccc is obtained from the SKEL file. The xxx is set to the ccc of the SKEL unless replaced by the local '/X' switch.

LOAD LINE

RLDR CWPCF CWREV APACK BCONVRT BMOVE CAKEY CKPAR CRFILE CREC CREC2 CROSS FPAT GET GETCCC GETPF INITAR JUANDEC LJUST OCHN PLANV SEARCH SLARG TIMSEC TROUBL WMOV BG.LB UTIL.LB FORT.LB SYS.LB AFOSE.LB

PROGRAM INSTALLATION

1. Move CWPCF.SV to an applications directory. Create a link in the master directory to CWPCF.SV.

2. Create links from the master directory to the applications directory for WPCF.nn.

3. Verify that the cccWPDxxx and cccMCPWPD keys are in your database.

CREATE WIND PROFILER CONTROL FILE

PART B: PROGRAM EXECUTION and ERROR CONDITIONS

PROGRAM NAME: CWPCF

AAL ID: GPH031
Revision No.: 01.04

PROGRAM EXECUTION

1. Edit preformat cccMCPWPD to choose profiler options.

2. To run CWPCF at the ADM, enter:

   RUN:CWPCF ccc/C xxx/X ee/E

   Definition of switches:

   LOCAL

   ccc/C = Specifies the new local AFOS node identifier (ccc) of the preformat.

   xxx/X = Specifies the new local AFOS station identifier (xxx) of the preformat.

   ee/E = Specifies the new extension of the WPCF file.

   Defaults (switch not used):

   /C = The 'ccc' is read from the SKEL file.
   /X = The 'ccc' from the SKEL file is used as the 'xxx'.
   /E = The extension of the WPCF file is '00'.

3. CWPCF should not be automatically executed, since these files need not be created every day. You may create as many as needed.

ERROR CONDITIONS

DASHER MESSAGES	MEANING
1. "CAN'T FIND AFOS PRODUCT"	The key (cccWPDxxx) was not found in the database. Add the key to the wish list and edit the preformat (M:WPD).
2. "TROUBLE READING BLOCK 0"	Couldn't read block zero of the AFOS product (cccWPDxxx). Purge the AFOS product and reedit the preformat.
3. "GETTING CHANNEL - 'file'"	Couldn't get I/O channel for 'file'. Probable system or disk problem.

DASHER MESSAGES	MEANING
4. "CREATING 'file'"	Couldn't create 'file'. Check to see if 'file' exists. If so, delete it and rerun program. If problem recurs, it is probably a system or disk problem.
5. "OPENING 'file'"	Couldn't open 'file'. Program not linked to or located on same directory as 'file'. Establish appropriate links to 'file'.
6. "SETTING FILE POS"	Couldn't set file position in SKEL file to read the 'ccc'. Probable system or disk problem.
7. "READING SKEL"	Couldn't read the 'ccc' from the SKEL file. Probable system or disk problem.
8. "CAN'T FIND ETX"	Couldn't find the End-of-Text character in the AFOS product. Purge the AFOS product and reedit the preformat.
9. "TROUBLE WRITING FILE"	Couldn't write AFOS product (cccWPDxxx) to disk. Probable system or disk problem.
10. "CAN'T FIND CRLF'S"	Couldn't find the several carriage returns and line feeds that separate the sections of the preformat (Time Section, Cross Section, and Plan View). Either the preformat was stored incorrectly, or the program misread it. Purge AFOS product and reenter preformat. If problem persists, call maintenance programmer.
11. "AFOS PROD TOO BIG"	Couldn't find End-of-Text character of AFOS product. The program is trying to find the next section to process (TS, CS, or PV). Purge AFOS product and reedit preformat. If problem persists, call maintenance programmer.
12. "WRB ERROR IN CREC"	Couldn't write to WPCF.xx. Probable system or disk problem.

DASHER MESSAGES	MEANING
13. "WRB ERROR IN CREC2"	Couldn't write to WPCF.xx. Probable system or disk problem.
14. "WRB ERROR CROSS"	Couldn't write to WPCF.xx. Probable system or disk problem.
15. "WRB ERROR PLANV"	Couldn't write to WPCF.xx. Probable system or disk problem.
16. "WRB ERROR TIMSEC"	Couldn't write to WPCF.xx. Probable system or disk problem.
17. "CAN'T GET CHANNEL"	Couldn't get I/O channel to WPLOG file. Probable system or disk problem.
18. "WRITING INFO TO BLOCK 0"	Couldn't write to block 0 of WPCF.nn. Block 0 holds information about what is stored in WPCF.nn.

PRINT WIND PROFILER CONTROL FILE

PART A: PROGRAM INFORMATION and INSTALLATION PROCEDURE

PROGRAM NAME: PWPCF

AAL ID: GPH031
Revision No.: 01.01

PURPOSE: Print the information contained in any wind profiler control file (WPCF.nn). The WPCF.nn file holds information needed by the application programs developed for the wind profiler system.

PROGRAM INFORMATION:

Development Programmer:

Joel T. Moeller

Location: Techniques Development Laboratory

Phone: 301-713-0056

Maintenance Programmer:

Gary F. Battel

Location: Techniques Development Laboratory

Phone: 301-713-0056

Language: FORTRAN IV/Rev 5.57
Macro Assembler/Rev 6.30

Type: Standard

Save file creation date: PWPCF.SV
Original release/Rev 01.00 - March 13, 1991
First revision/Rev 01.01 - January 13, 1992

Running time: 9 seconds

Disk space: Program files - 25 RDOS blocks
Data files - 8 RDOS blocks

PROGRAM REQUIREMENTS

Program Files:

NAME
PWPCF.SV

Data files:

NAME:	Disk location	READ/WRITE	COMMENTS
WPCF.nn	User directory	R	The output wind profiler expanded options file. You can create and save multiple files. Extension 'nn' is a numerical indicator for the file, which may range from '00' to '99'.

LOAD LINE

RLDR PWPCF PWREV BCONVRT BMOVE IPANDEC OCHN SLARG TROUBL UTIL.LB FORT.LB

PROGRAM INSTALLATION

1. Move PWPCF.SV to an applications directory. Create a link in the master directory to PWPCF.SV.

2. Create links from the master directory to an applications directory for WPCF.nn.

PRINT WIND PROFILER CONTROL FILE

PART B: PROGRAM EXECUTION and ERROR CONDITIONS

PROGRAM NAME: PWPCF

AAL ID: GPH031
Revision No.: 01.01

PROGRAM EXECUTION

1. Edit preformat M:WPD to choose profiler options, and run CWPCF to create files WPCF.nn.

2. To run PWPCF at the ADM, enter:

   RUN:PWPCF nn/E

   Definition of switches:

   LOCAL

   nn/E = Specifies the extension of the WPCF.nn file that you wish to print.

   Defaults (switch not used):

   /E = The extension of the WPCF file is '00'.

ERROR CONDITIONS

DASHER MESSAGES	MEANING
1. "GETTING CHANNEL - 'file'"	Couldn't get I/O channel for 'file'. Probable system or disk problem.
2. "OPENING 'file'"	Couldn't open 'file'. Program not linked to or located on same directory as 'file'. Establish appropriate links to 'file'.
3. "RDB ERROR"	Couldn't read WPCF.xx. Probable system or disk problem.

UPDATE CONTROL FILE

PART A: PROGRAM INFORMATION and INSTALLATION PROCEDURES

PROGRAM NAME: WPSET

AAL ID: GPH031
Revision No.: 01.01

PURPOSE: Establish or update the file which controls some aspects of the decoding process and runtime input. WPSET allows the user to specify the name of the file which contains the options needed during run time processing, change the number of hours to store in the decoded file, specify the stations to be decoded, name the input file to be decoded, and name the output decoded file.

PROGRAM INFORMATION:

Development Programmer:

Mark A. Leaphart

Location: Techniques Development Laboratory

Phone: 301-713-0056

Maintenance Programmer:

Gary F. Battel

Location: Techniques Development Laboratory

Phone: 301-713-0056

Language: FORTRAN IV/Rev 5.57
Macro Assembler 6.30

Type: Standard

Save file creation date: WPSET.SV
Original release/Rev 01.00 - January 12, 1990
First revision/Rev 01.01 - April 22, 1991

Running time: 5 sec, if run manually; varies, if run interactively

Disk space: Program files - 30 RDOS blocks
Data files - 2 RDOS blocks

PROGRAM REQUIREMENTS

Program files:

NAME
WPSET.SV

Data files:

NAME	Disk location	READ/WRITE	COMMENTS
WP.CF	User directory	R/W	Contains information which controls the decoding of wind profiler data and selection of file containing user options.

LOAD LINE

RLDR WPSET ADDST BINIT BMOVE CEXT CHAFN CHDAN CHRST DELST GETCCC INITAR IPANDEC IREAD OCHN SEARCH TROUBL WMOV WPSREV UTIL.LB FORT.LB

PROGRAM INSTALLATION

1. Move WPSET.SV to an applications directory. Create link in the master directory to WPSET.SV.

2. Verify that WP.CF is linked to the applications directory.

UPDATE CONTROL FILE

PART B: PROGRAM EXECUTION and ERROR CONDITIONS

PROGRAM NAME: WPSET

AAL ID: GPH031
Revision No.: 01.01

PROGRAM EXECUTION

There are two modes of execution for this program. During the installation of the software, this program must be run once interactively on the Dasher to establish the default settings. After the initial run, this program may be run interactively on the Dasher to change the default settings, but this function should be required infrequently. However, there is one function of the program which may be used quite frequently--changing the name of the options file used by the run time applications. In this capacity, the program is more conveniently executed from the ADM console with a switch to indicate the extension of the name of the options file.

1. To run WPSET interactively at the Dasher, enter:

   WPSET

   On the Dasher are displayed the current settings: the extension of the options file, the number of hours to store, the name of the input file of binary data, and the name of the output file of decoded data. Following this information, a list of choices appears which allows the user to change any of the following information: extension of the options file; maximum number of hours to store for each station; names of the stations to be decoded; the input binary data file name; and the output file name.

2. Alternatively, to run WPSET manually at the ADM, enter:

   RUN:WPSET nn/E

   Running WPSET manually serves only one purpose: to change the extension of the options file. You cannot perform any other interactive function in this mode.

Definition of switches:

LOCAL

nn/E = Extension of options file WPCF.nn which the runtime programs use as input.

Defaults: (None)

ERROR CONDITIONS

DASHER MESSAGES	MEANING
1. "GETTING CHANNEL - WP.CF"	Couldn't get I/O channel for WP.CF. Probable system or disk problem.
2. "OPENING WP.CF"	Program not linked to or located in same directory as WP.CF. Establish appropriate link to WP.CF.
3. "CAN'T GET I/O CHANNEL"	Couldn't obtain I/O channel to WP.CF or couldn't open WP.CF. Possible system or disk problem, or program not linked to or located in same directory as WP.CF.
4. "COULDN'T CREATE WP.CF"	Couldn't create WP.CF. Determine if WP.CF exists. If so, delete it, and rerun program. If problem recurs, it is probably a system or disk problem.
5. "COULDN'T READ WP.CF"	Couldn't read from WP.CF. Delete WP.CF and rerun program.
6. "COULDN'T WRITE WP.CF"	Couldn't write to WP.CF. Delete WP.CF and rerun program.
7. "SETTING FILE POS"	Couldn't set file position in SKEL file to read the 'ccc'. Probable system or disk problem.
8. "READING SKEL"	Couldn't read the 'ccc' from the SKEL file. Probable system or disk problem.

DECODE WIND PROFILER DATA

PART A: PROGRAM INFORMATION and INSTALLATION PROCEDURES

PROGRAM NAME: WPDEC

AAL ID: GPH031
Revision No.: 02.01

PURPOSE: Decode data stored in binary format (BUFR) in AFOS product NMCWPDERL so that data are accessible to wind profiler applications programs.

PROGRAM INFORMATION:

Development Programmer:

Mark A. Leaphart

Location: Techniques Development Laboratory

Phone: 301-713-0056

Language: FORTRAN IV/Rev 5.57
Macro Assembler/Rev 6.30

Maintenance Programmer:

Gary F. Battel

Location: Techniques Development Laboratory

Phone: 301-713-0056

Type: Standard

Save file creation dates: WPDEC.SV

Original release/Rev 01.00	- January 5, 1990
First revision/Rev 01.01	- May 9, 1990
Second revision/Rev 01.02	- November 6, 1990
Third revision/Rev 01.03	- April 15, 1991
Fourth revision/Rev 02.00	- March 8, 1993
Fifth revision/Rev 02.01	- March 16, 1993

Running time: 75 sec for 31 stations for one version.

Extended memory - 99K (background set to 128K)

Disk space: Program files - 71 RDOS blocks
Data files - 1,141 RDOS blocks (31 stations)

PROGRAM REQUIREMENTS

Program files:

NAME
WPDEC.SV

Data files:

NAME	Disk location	READ/WRITE	COMMENTS
WPSTAT	User directory	R	File which contains latitude, longitude, and AFOS ID of each station.

NAME	Disk location	READ/WRITE	COMMENTS
WP.CF	User directory	R	File which specifies name of AFOS input product (default is NMCWPDERL), name of output file (default is WPDATA), number of hours to decode (default is 24), and stations to decode (default is all stations currently stored in input product).
WPDATA	User directory	R/W	Output file in which the decoded data are stored.

AFOS Products:

ID	ACTION	COMMENTS
NMCWPDERL	Read	Wind profiler data in coded binary format in AFOS database.

LOAD LINE

```
RLDR CKSTAT INITAR MVDATA DIGIT SLARG SWPDATA UPHRS WCOPY WPREV 2000/N
     WPDEC BCONVRT BITDEC BLZERO BMOVE BYPASS CDECK CKPAR CPYST CRFILE
     DADDI DBITS DCAP DECK EXTR JULIAN MOVER NDCODE SEARCH EXTRAC FSTID
     FSTKY FSTRE HRCHECK IPANDEC OCHN RDBLK RSTDR SSDATA TROUBL WMOV
     WPBUF WP2BUF WPDEC/S BG.LB XMEM.LB UTIL.LB FORT.LB AFOSE.LB
```

PROGRAM INSTALLATION

1. Move WPDEC.SV to an applications directory. Create links in the master directory to WPDEC.SV.

2. Verify that background memory allocation is set to 128K. The RDOS command 'GMEM' will reveal the partitioning of the two grounds, and the command 'SMEM 128' will set the grounds.

3. Verify that WPDATA, WPSTAT, and WP.CF are linked to the applications directory.

DECODE WIND PROFILER DATA

PART B: PROGRAM EXECUTION and ERROR CONDITIONS

PROGRAM NAME: WPDEC

AAL ID: GPH031
Revision No.: 02.01

PROGRAM EXECUTION

1. To run WPDEC at the ADM, enter:

   RUN:WPDEC/D hh/H

   Definition of switches:

   GLOBAL

   /D = Compute data capture statistics for each station.

   Defaults:

   /D = Do not compute data capture statistics.

   LOCAL

   hh/H = Decode 24 hours of input RDOS files, ending with hour 'hh'.

   Defaults

   /H = Decode input database messages, ending with the most recent hour.

ERROR CONDITIONS

DASHER MESSAGES	MEANING
1. "MAPDF ERROR"	Program could not set up the window for extended memory. Reload save file from starter diskette and rerun. If problem persists, call maintenance programmer.
2. "REMAP ERROR SWPDA" 3. "REMAP ERROR FSTKEY"	Couldn't map a block from extended memory into the window. Reload save file from starter diskette and rerun. If problem persists, call maintenance programmer.
4. "GETTING CHANNEL - 'file'"	Couldn't get I/O channel to 'file'. Probable system or disk problem.

DASHER MESSAGES	MEANING
5. "OPENING 'file'"	Couldn't open 'file'. Program not linked to, or located in same directory as 'file'. Establish appropriate link to 'file'.
6. "READING 'file'"	Couldn't read 'file'. Delete 'file', and recreate it.
7. "KSCRF ERROR 'NMCWPDxxx'"	The NMCWPDxxx key was not found in the AFOS database. Add NMCWPDxxx to the wish list or database.
8. "NOT ENOUGH EXTENDED MEMORY"	There is not enough extended memory for WPDEC to execute. Set background to 128K.
9. "COULDN'T OPEN 'file'"	Couldn't open 'file'. Program not linked to, or located in same directory as 'file'. Establish appropriate link to 'file'.
10. "READING KEY BLOCK" 11. "WRITING KEY BLOCK"	Couldn't read or write the key block of the data file. Delete the data file (WPDATA is the default name). OEDIT WP.CF and set locations 1 through 4 to -1 (177777K). Rerun WPDEC. If problem recurs, call maintenance programmer.
12. "WRITING FILE"	Couldn't write to the data file (WPDATA). Delete the data file. OEDIT WP.CF to set locations 1 through 4 to -1 (177777K) and rerun WPDEC. If problem recurs, call maintenance programmer.
13. "ERDB ERROR IPC,IER,ISTATE=X,Y,Z" 14. "ERWB ERROR IPC,IER,ISTATE=X,Y,Z"	WPDEC could not read/write the data from/to extended memory. Delete the data file, and OEDIT WP.CF. Set locations 1 through 4 to -1 (177777K), and rerun WPDEC. If problem recurs, call maintenance programmer. 'Y' is the FORTRAN error; 'X' is the number of RDOS blocks written/read at the time of the error; 'Z' tells where the error occurred in the program.

DISPLAY TIME SECTIONS OF HORIZONTAL WIND VECTORS

PART A: PROGRAM INFORMATION and INSTALLATION PROCEDURES

PROGRAM NAME: TSPLOT

AAL ID: GPH031
Revision No.: 02.00

PURPOSE: Create time section graphic files of horizontal wind velocity, thermal wind, and perturbation wind.

PROGRAM INFORMATION:

Development Programmer:

Mark A. Leaphart

Location: Techniques Development Laboratory

Phone: 301-713-0056

Maintenance Programmer:

Gary F. Battel

Location: Techniques Development Laboratory

Phone: 301-713-0056

Language: FORTRAN IV/Rev. 5.57
Macro Assembler/Rev. 6.30

Type: Virtual Overlay

Save file and overlay file creation dates: TSPLOT.SV and TSPLOT.OL

Original release/Rev 01.00	- January 24, 1990
First revision/Rev 01.01	- May 15, 1990
Second revision/Rev 01.02	- November 6, 1990
Third revision/Rev 01.03	- April 19, 1991
Fourth revision/Rev 02.00	- February 12, 1993

Running time: 48 seconds per station for all 3 products

Extended memory: - 16K (Background set to 128).

Disk space: Program files - 114 RDOS blocks
Data files - 1,141 RDOS blocks (31 stations)

PROGRAM REQUIREMENTS:

Program files:

NAME
TSPLOT.SV
TSPLOT.OL

Data files:

NAME	Disk location	READ/WRITE	COMMENTS
WPDATA	User directory	R	Decoded profiler data.
WPSTAT	User directory	R	Station directory.

NAME	Disk location	READ/WRITE	COMMENTS
WP.CF	User directory	R	File which contains the name of the expanded options file to use in current run.
WPCF.nn	Master directory	R	The output wind profiler expanded options file. The extension 'nn' is a numerical indicator for the file, which may range from '00' to '99'.
TSPLOT.AP	User directory	W	Holds the names of the AFOS products created on the last run. To display this file on ADM, enter: 'DSP:TSPLOT.AP'.

AFOS products:

ID	ACTION	COMMENTS
NMCGPHxxx	Stored	One plot for each station and product selected. The 'xxx' identifies the station, the product, and the product type (time sections).

LOAD LINE

RLDR BCONVRT BINIT BMOVE BSTRING FSREC GTDAY INITAR JULIAN LVCTR SDDVD SDMPY SEARCH SLARG TROUBL UVTDS TSPLOT/S [SWX CRFILE GKIDS GSINFO GTYPE IPANDEC OCHN RDBLK RSTDR TSVARDEF, DEXTER DECK DEXTR GETAREA FHOUR HRDIF SWCH, PARXT ASCDD BHPLOT CHOURS DDPERT FLAST MXRDB PHTIC RADJST RDKEY RECALC, CAP ADL COPYDB WPPROD, THERM FLROW FSTART EXPUV XPMSHR XPQC HORIZONTAL, PERTWD PERTMS PERTQC BARBS BARBMS BARBQC]/V TSPLOT COLPOS DADDI FPSMO GPREP GFMT GWIND TSPCK TSPREV UVT WMOV BG.LB XMEM.LB UTIL.LB TOP.LB FORT.LB

PROGRAM INSTALLATION

1. Move TSPLOT.SV and TSPLOT.OL to an applications directory. Create links from the master directory to TSPLOT.SV, TSPLOT.OL, and TSPLOT.AP.

2. Verify that the background has been allocated to at least 128K. The RDOS command 'GMEM' will reveal this information, and the command 'SMEM 128' will set the grounds.

3. Verify that WPDATA, WP.CF, WPCF.nn, and WPSTAT are linked to, or located in the same directory from which TSPLOT is executed.

DISPLAY TIME SECTIONS OF HORIZONTAL WIND VECTORS

PART B: PROGRAM EXECUTION and ERROR CONDITIONS

PROGRAM NAME: TSPLOT AAL ID: GPH031
Revision No.: 02.00

PROGRAM EXECUTION:

1. TSPLOT will run in control file mode only when all global product switches (i.e., /B, /P, /T) have been omitted. At the ADM, enter:

   RUN:TSPLOT/Q aaa/A

   TSPLOT will run in the command line mode only when a global product switch is specified. Enter:

   RUN:TSPLOT/Q/B/N/P/T zz/Z hh/H ll/L tt/T sss/S aaa/A

   Definition of switches:

   GLOBAL

   /Q - Skip processing (quit) if number of newly decoded input data versions is zero.
   /B - Produce horizontal wind barb plots.
   /N - Do not display any horizontal wind that did not pass both quality control checks (used only with /B).
   /P - Produce perturbation wind plots.
   /T - Produce thermal wind plots.

   Defaults:

   In command line mode, defaults are initiated whenever a switch is omitted. In control file mode, defaults are initiated whenever a preformat field entry is omitted.

   /Q - Do not skip processing, even if the decoder has not decoded new data.
   /B - Do not produce horizontal wind barb plots.
   /N - Display horizontal winds with flags to indicate which data have not passed both quality control checks.
   /P - Do not produce perturbation wind plots.
   /T - Do not produce thermal wind plots.

   LOCAL

   zz/Z - Specifies the base height for the plots. The height is in hundreds of meters, with a range from zero to 99.
   hh/H - Ending hour to plot. 'hh' may range from zero to 23.
   ll/L - Height increment (in multiples of 250 m) for which to calculate the thermal wind. 'll' can range from one to 16.
   tt/T - Time interval for this run. 'tt' may range from one to 16 (15 for perturbation wind).

sss/S = Specifies the stations to be plotted. Up to three sets of stations and switches may be specified.
aaa/A = Routing address for RDC or SDC.

Defaults:

In command line mode, defaults are initiated whenever a switch is omitted. In control file mode, defaults are initiated whenever a preformat field entry is omitted.

/Z = Base height is zero (sea level).
/H = Produce plots ending at the latest decoded hour.
/L = Height increment is four 250-m levels (1,000 m).
/T = Plot 16 hours of data (15 hours for the perturbation wind).
/S = Plot all the stations stored in the decoded file.
/A = None.

ERROR CONDITIONS

DASHER MESSAGES	MEANING
1. "GETTING CHANNEL - 'file'"	Couldn't obtain I/O channel to 'file'. Probable system or disk problem.
2. "OPENING 'file'"	Couldn't open 'file'. Program not linked to, or located in same directory as 'file'. Establish appropriate links.
3. "OVOPN ERROR"	Problem with the overlay file. Determine that the overlay file resides in the applications directory and that there is a link to it. If the problem recurs, reload the save and overlay files from the starter diskette and rerun the program. If the problem persists, call maintenance programmer.
4. "MAPDF ERROR"	Program could not set up the window for extended memory use. Reload save and overlay files from starter diskette and rerun. If problem persists, call maintenance programmer.
5. "NOT ENOUGH EXTENDED MEMORY AVAILABLE"	There is not enough extended memory available for TSPLOT to run. Set background to 128K.
6. "CREATING 'file'"	Couldn't create 'file'. Determine if 'file' exists. If so, delete it and rerun program. If

DASHER MESSAGES	MEANING
	problem persists, call maintenance programmer.
7. "READING 'file'"	Couldn't read 'file'. Delete 'file'. You may need to reload 'file' from starter diskette or recreate it.
8. "UTF ERROR - NMCGPHxxx"	This message results from either of two problems. The problem may be that there is no key in the database for NMCGPHxxx. Add NMCGPHxxx to the wish list and rerun program. The other possibility is that the area reserved for holding graphic instructions was exceeded by the current graphics plot. Call maintenance programmer.
9. "SPACE PROBLEMS"	The area reserved for holding graphics instructions was exceeded by current graphics plot. Call maintenance programmer.
10. "WRITING AP FILE" 11. "ADL WRITE"	Couldn't write to the TSPLOT.AP file. Verify that TSPLOT.AP is linked to the applications directory. Delete TSPLOT.AP from the applications directory, and rerun program.
12. "CAN'T FIND TYPE"	Couldn't find the type of record (TS, CS, or PV) in WPCF.nn. Reedit preformat, and run CWPCF. If problem persists, call maintenance programmer.
13. "READING WPCF GSINFO"	Couldn't read WPCF.nn. Determine that you are reading the correct file (nn). You may need to run WPSET to change the file extension. If not, delete WPCF.nn, reedit preformat, and run CWPCF.
14. "KEY NOT FOUND"	The type of products used by TSPLOT was not found in WPCF.nn. Reedit the preformat and rerun CWPCF. If problem persists, call maintenance programmer.

DASHER MESSAGES	MEANING
15. "DEXTER ERROR IER= X"	TSPLOT couldn't map a block from extended memory into the window. Reload save and overlay files from starter diskette and rerun. If problem persists, call maintenance programmer. 'X' is the FORTRAN error return.
16. "MXRDB ERROR IPC,IER= X,Y" 17. "READING DATA FILE NC IPC, IER= X,Y"	Couldn't read the data file from disk to extended memory. Delete the data file. OEDIT WP.CF, set locations 1 through 4 to -1 (177777K), and rerun WPDEC. If problems persist, call maintenance programmer. 'Y' is the actual FORTRAN error, and 'X' is the number of RDOS blocks transferred to extended memory.

DISPLAY TIME SECTIONS OF CONTOURED PRODUCTS

PART A: PROGRAM INFORMATION and INSTALLATION PROCEDURE

PROGRAM NAME: TSCON

AAL ID: GPH031
Revision No.: 02.00

PURPOSE: Produce time section gridpoint values of wind speed; wind direction and speed shear; u, v, and w components of the wind; and normalized returned power. Gridpoint values are contoured by swapping to WPCON. The macro TCMAC.MC must be run after TSCON to convert the Internal Plot Files (IPF's) into displayable graphics files.

PROGRAM INFORMATION:

Development Programmer:

Mark A. Leaphart

Location: Techniques Development Laboratory

Phone: 301-713-0056

Maintenance Programmer:

Gary F. Battel

Location: Techniques Development Laboratory

Phone: 301-713-0056

Language: FORTRAN IV/Rev 5.57
Macro Assembler/Rev. 6.30

Type: Overlay

Save file and overlay file creation dates: TSCON.SV and TSCON.OL

Original release/Rev 01.00	- January 24, 1990
First revision/Rev 01.01	- May 18, 1990
Second revision/Rev 01.02	- October 31, 1990
Third revision/Rev 01.03	- April 19, 1991
Fourth revision/Rev 02.00	- February 16, 1993

Running time: 33 seconds per plot. See also WPCON.

Extended memory - 23K (Background set to 128).

Disk space: Program files - 134 RDOS blocks
Data files - 1,175 RDOS blocks (31 stations)

PROGRAM REQUIREMENTS

Program files:

NAME

TSCON.SV
TSCON.OL

Data files:

NAME	Disk location	READ/WRITE	COMMENTS
WPDATA	User directory	R	Decoded profiler data.
WPSTAT	User directory	R	Station directory.
TCMAC.MC	User directory	W	Macro that converts all the IPF's into UTF displayable graphic files.
WP.CF	User directory	R/W	File which contains the name of the expanded options file to use in current run.
WPCF.nn	Master directory	R	Expanded options file. The 'nn' extension is a numerical indicator for the file, which may range from '00' to '99', with default of '00'.
MSGPRD	User directory	W	Holds the contents of the wind profiler message product. MSGPRD is deleted upon being stored in the AFOS database.
WPCD	User directory	W	Holds the gridded profiler data to be contoured.
TSCON.AP	User directory	W	Holds the names of the AFOS products created on the last run. To display TSCON.AP on ADM, enter: 'DSP:TSCON.AP'.

AFOS products:

ID	ACTION	COMMENTS
NMCGPHxxx	Stored	One plot for each station and product selected. The xxx identifies the station, the product, and the product type (time sections).
cccWPDMSG	Read/Store	Wind profiler alert message product. If any values in the data exceed threshold values, a message is written to the message product. The 'ccc' is taken from the SKEL file.

LOAD LINE

RLDR BCONVRT BMOVE COLPOS CRFILE DADDI FLROW INITAR JULIAN ROWPOS SEARCH SLARG TROUBL OCHN SDDVD WMOV 2000/N TSCON ADL IPANDEC SDDVD SDMPY

SLAB UVTDS AWRITE TSCREV 13/C TSCON/S [GTYPE COMMAND GKIDS GSINFO RDBLK RSTDR, TCREAD BINIT BSTRING DECK DEXTER DEXTR GETAREA FHOUR FLAST FSREC HRDIF MXRDB PARXT RDKEY, SEPUV CKMSHR CKQC CAP CIJMIN CIPFN RADJST RPOWER SWCH TSPCK WCOMP WPPROD WSHEAR, XSPLINE GL2SL MOVDAT MOVAR KSMOT2 KINSMO2, XBOT FLCR XHORZ INTPL XTOP UVMOV XVERTSPL FLCOL WSPEED, ALERT CALERT CMACRO MSGHDR PSWAP SSWAP] BG.LB XMEM.LB UTIL.LB TOP.LB FORT.LB SYS.LB AFOSE.LB

PROGRAM INSTALLATION

1. Move TSCON.SV and TSCON.OL to an applications directory. Create links in the master directory to TSCON.SV, TSCON.OL, TSCON.AP, TCMAC.MC, and WPCD.

2. Verify that the background has been allocated to at least 128K. The RDOS 'GMEM' command will reveal this information, and the command 'SMEM 128' will set the grounds.

3. Verify that WPDATA, WPCF.nn, WP.CF, TCMAC.MC, and WPSTAT are linked to the applications directory.

4. Ensure that WPCON has been properly installed.

DISPLAY TIME SECTIONS OF CONTOURED PRODUCTS

PART B: PROGRAM EXECUTION and ERROR CONDITIONS

PROGRAM NAME: TSCON AAL ID: GPH031
Revision No.: 02.00

PROGRAM EXECUTION

1. TSCON will run in the control file mode only when all global product switches (i.e., all global switches except /Q) are omitted. At the ADM, enter:

   RUN:TSCON/Q aaa/A

   TSCON will run in the command line mode only when a global product switch is specified. Enter:

   RUN:TSCON/Q/U/V/S/W/P/D/R zz/Z hh/H tt/T ii/I ll/L sss/S aaa/A

   Definition of switches:

   GLOBAL

   /Q = Skip processing (quit) if number of newly decoded input data versions is zero.
   /U = Produce u component contours.
   /V = Produce v component contours.
   /S = Produce wind speed contours.
   /W = Produce w component contours.
   /P = Produce normalized returned power contours.
   /D = Produce wind direction shear contours.
   /R = Produce wind speed shear contours.

   Defaults:

   In command line mode, defaults are initiated whenever a switch is omitted. In control file mode, defaults are initiated whenever a preformat field entry is omitted.

   /Q = Do not skip processing, even if the decoder has not decoded new data.
   /U = Do not produce u component contours.
   /V = Do not produce v component contours.
   /S = Do not produce wind speed contours.
   /W = Do not produce w component contours.
   /P = Do not produce normalized returned power contours.
   /D = Do not produce wind direction shear contours.
   /R = Do not produce wind speed shear contours.

   LOCAL

   zz/Z = Specifies the base height for the contours. The height is in hundreds of meters, with a range from zero to 99.
   hh/H = Ending hour to plot. 'hh' may range from zero to 23.

tt/T = Time interval for this run. 'tt' may range from eight to 16.
ii/I = Specifies the contour interval for all products, ranging from one to 99. If the selected contour interval is too low or too high, the program will override this selection.
ll/L = Height increment (in multiples of 250 m) to calculate wind shear products.
sss/S = Specifies the stations to be plotted. Up to three sets of stations and switches may be specified.
aaa/A = Routing address for RDC or SDC.

Defaults:

In command line mode, defaults are initiated whenever a switch is omitted. In control file mode, defaults are initiated whenever a preformat field entry is omitted.

/Z = Base height for plots is zero (sea level).
/H = Produce contours ending at the latest decoded hour.
/T = Plot 16 hours of data.
/I = Contour intervals: 10 kt for wind speed, u and v components, and wind speed shear; 10 cm/s for w component; 10 dB for returned power; and 40° for wind direction shear.
/L = Height increment is four levels.
/S = Plot all the stations stored in the decoded file.
/A = None.

2. Run TCMAC.MC. TCMAC.MC is a macro that generates UTF displayable products from IPF's. At the ADM, enter:

RUN:TCMAC

ERROR CONDITIONS

DASHER MESSAGES	MEANING
1. "MAPDF ERROR"	Program could not create the window for extended memory. Reload save and overlay file from diskette and rerun. If problem persists, call maintenance programmer.
2. "NOT ENOUGH EXTENDED MEMORY AVAILABLE"	There is not enough extended memory available for TSCON to execute. Set background to 128K.
3. "GETTING CHANNEL 'file'"	Couldn't get I/O channel to 'file'. Probable system or disk problem.
4. "OPENING 'file'"	Couldn't open 'file'. Program not linked to or located in same directory as 'file'. Establish appropriate links to 'file'.

DASHER MESSAGES	MEANING
5. "CREATING 'file'"	Couldn't create 'file'. Program not linked to, or located in same directory as 'file'. Establish appropriate link to 'file'.
6. "WRITING AP FILE"	Couldn't write to the TSCON.AP file. Ascertain that TSCON.AP is linked to the applications directory. Delete TSCON.AP from the applications directory and rerun program.
7. "ADL WRITE"	Couldn't write to TSCON.AP or MSGPRD. Ascertain that TSCON.AP and MSGPRD are linked to the applications directory. Delete TSCON.AP and MSGPRD from the applications directory and rerun program.
8. "CAN'T FIND TYPE"	Couldn't find the type of record (TS, CS, or PV) in WPCF.nn. Reedit the preformat and rerun CWPCF. If problem recurs, call maintenance programmer.
9. "KEY NOT FOUND"	The type of products used by TSCON was not found in WPCF.nn. Reedit the preformat and rerun CWPCF. If problem persists, call maintenance programmer.
10. "READING WPCF GSINFO"	Couldn't read WPCF.nn. Determine if you are reading the correct file (nn). You may need to run WPSET to change the extension. If not, delete WPCF.nn, reedit the preformat, and run CWPCF.
11. "READING 'file'"	Couldn't read 'file'. Delete 'file'. You may need to reload 'file' from starter diskette, or recreate it by running another program.
12. "WRITING WP.CF"	Couldn't update WP.CF before storing the message product in the database. Delete WP.CF. Rerun WPSET, WPDEC, and TSCON. If problem persists, call maintenance programmer.

DASHER MESSAGES	MEANING
13. "KSRCF ERROR cccWPDMSG"	The cccWPDMSG key was not found in the AFOS database. Add cccWPDMSG to the wish list or database and rerun TSCON.
14. "BLOCK 0 - cccWPDMSG"	Couldn't read the first block of message product. Purge cccWPDMSG and OEDIT WP.CF. Set locations 27 through 30 to -1 (177777K) and rerun TSCON. If problem persists, call maintenance programmer.
15. "CRLF - cccWPDMSG"	Couldn't find the carriage return and line feed that ends the WMO header. Purge cccWPDMSG and OEDIT WP.CF. Set locations 27 through 30 to -1 (177777K) and rerun TSCON. If problem persists, call maintenance programmer.
16. "GSMG WRITE - cccWPDMSG"	Couldn't write the alert information to the message file. Delete MSGPRD and rerun TSCON.
17. "#END# cccWPDMSG"	Couldn't find end of message product. Purge cccWPDMSG and OEDIT WP.CF. Set locations 27 through 30 to -1 (177777K) and rerun TSCON.
18. "FSTORE cccWPDMSG"	Couldn't store cccWPDMSG into the AFOS database. Add cccWPDMSG to the wish list or database and rerun TSCON.
19. "PSWAP WRB"	Couldn't write data to be contoured. Delete WPCD and rerun TSCON. If problem persists, call maintenance programmer.
20. "MAPDF - PSWAP"	Couldn't initialize the extended memory window upon returning from the contour program. Reload save and overlay files from the starter diskette and rerun. If problem persists, call maintenance programmer.
21. "WRITING WPCD"	Couldn't write the first two RDOS blocks to the contour file. Delete WPCD and rerun TSCON. If

DASHER MESSAGES	MEANING
	problem persists, call maintenance programmer.
22. "DEXTER ERROR= X"	TSCON couldn't map a block from extended memory into the window. Reload save and overlay files from diskette and rerun. If problem persists, call maintenance programmer. 'X' is the FORTRAN error return.
23. "MXRDB ERROR IPC,IER= X,Y" 24. "READING DATA FILE NC IPC, IER= X,Y"	Couldn't write the data from the data file to extended memory. Delete the data file and OEDIT WP.CF. Set locations 1 through 4 to -1 (177777K) and rerun WPDEC. If problem persists, call maintenance programmer. 'Y' is FORTRAN error code, and 'X' is number of RDOS blocks written to extended memory.

DISPLAY TIME SECTIONS OF CONTOURED KINEMATIC PRODUCTS

PART A: PROGRAM INFORMATION and INSTALLATION PROCEDURE

PROGRAM NAME: TSKIN

AAL ID: GPH031
Revision No.: 02.00

PURPOSE: Produce time section gridpoint values of derived vorticity, divergence and vertical velocity values. Contour displays are produced by swapping to program WPCON. The macro TKMAC.MC must be run after TSKIN in order to store the Internal Plot Files (IPF's) as displayable graphics products.

PROGRAM INFORMATION:

Development Programmer:

Mark A. Leaphart

Location: Techniques Development Laboratory

Phone: 301-713-0056

Maintenance Programmer:

Gary F. Battel

Location: Techniques Development Laboratory

Phone: 301-713-0056

Language: FORTRAN IV/Rev. 5.57
Macro Assembler/Rev 6.30

Type: Overlay

Save file and overlay file creation dates: TSKIN.SV and TSKIN.OL

Original release/Rev 01.00	-	January 24, 1990
First revision/Rev 01.01	-	May 17, 1990
Second revision/Rev 01.02	-	November 1, 1990
Third revision/Rev 01.03	-	April 19, 1991
Fourth revision/Rev 02.00	-	February 17, 1993

Running time: 60 seconds per station set per product. See also WPCON.

Extended memory - 36K (Background set to 128K).

Disk space: Program files - 122 RDOS blocks
Data files - 1,175 RDOS blocks (31 stations)

PROGRAM REQUIREMENTS

Program files:

NAME
TSKIN.SV
TSKIN.OL

Data files:

NAME	Disk location	READ/WRITE	COMMENTS
WPDATA	User directory	R	Decoded wind profiler data.
WPSTAT	User directory	R	Station directory.
TKMAC.MC	User directory	W	Macro that converts all the IPF's into UTF displayable graphics files.
WP.CF	User directory	R	File which contains the name of the expanded options file to use in current run.
WPCF.nn	Master directory	R	Expanded options file. The 'nn' extension is a numerical indicator for the file, which may range from '00' to '99', with default of '00'.
TSKIN.AP	User directory	W	Holds the names of the AFOS products created on the last run. To display TSKIN.AP on ADM, enter 'DSP:TSKIN.AP'.
WPCD	User directory	W	Holds the gridded profiler data to be contoured.

AFOS products:

ID	ACTION	COMMENTS
NMCGPHxxx	Stored	One plot for each station and product selected. The 'xxx' identifies the station, the product, and the product type (time sections).

LOAD LINE

```
RLDR BCONVRT BMOVE CRFILE DCOMP INITAR JULIAN OCHN SEARCH SLARG TROUBL
     WMOV ROWPOS DADDI SDDVD SDMPY 2000/N TSKIN TSKREV 13/C TSKIN/S
     [GTYPE BINIT BSTRING FLAST FSREC GKIDS GSINFO IPANDEC PARXT RCTSK
     RDBLK RSTDR, MXDEX CRSLAB DECK DEXTER DEXTR GETAREA FHOUR GSLOC
     HRDIF MXRDB, SXMAT INITRA RADJST RINVERSE SEPUV CKMSHR CKQC TSPCK,
     INTPL XBOT XTOP XHORZ XVERTSPL, FINDHT FLCR FROW KINSMO2 KSMOT2
     MOVDAT, XSPLINE CDVVT COMPVV MOVAR, CAP CIJMIN CIPFN ADL CMACRO
     PSWAP SLAB SSWAP WPPROD] AWRITE COLPOS FLCOL FLROW UTIL.LB TOP.LB
     XMEM.LB FORT.LB SYS.LB AFOSE.LB
```

PROGRAM INSTALLATION

1. Move TSKIN.SV and TSKIN.OL to an applications directory. Create links in the master directory to TSKIN.SV, TSKIN.OL, TSKIN.AP, TKMAC.MC, and WPCD.

2. Verify that background has been allocated at least to 128K. The RDOS 'GMEM' command will reveal this information, and the command 'SMEM 128' will set the grounds.

3. Verify that WPDATA, WP.CF, WPCF.nn, TKMAC.MC, WPSTAT, TSKIN.AP, and WPCD are linked to, or located in the same directory from which TSKIN is executed.

4. Ensure that WPCON has been properly installed.

DISPLAY TIME SECTIONS OF CONTOURED KINEMATIC PRODUCTS

PART B: PROGRAM EXECUTION and ERROR CONDITION

PROGRAM NAME: TSKIN AAL ID: GPH031
Revision No.: 02.00

PROGRAM EXECUTION

1. TSKIN will run in the control file mode only when all the global product switches (i.e., /D, /V, /W) are omitted. At the ADM, enter:

   RUN:TSKIN/Q aaa/A

   TSKIN will run in the command line mode only when a global product switch is specified. Enter:

   RUN:TSKIN/Q/D/V/W zz/Z ii/I hh/H tt/T sss/S aaa/A

   Definition of switches:

   GLOBAL

   /Q = Skip processing (quit) if number of newly decoded input data versions is zero.
   /D = Produce divergence contour plots.
   /V = Produce absolute vorticity contour plots.
   /W = Produce derived vertical velocity contour plots.

   Defaults:

   In command line mode, defaults are initiated whenever a switch is omitted. In control file mode, defaults are initiated whenever a preformat field entry is omitted.

   /Q = Do not skip processing, even if the decoder has not decoded new data.
   /D = Do not produce divergence contour plots.
   /V = Do not produce absolute vorticity contour plots.
   /W = Do not produce derived vertical velocity contour plots.

   LOCAL

   zz/Z = Base height of plots. The height is in hundreds of meters, with a range from zero to 99.
   ii/I = Specifies new contouring interval. Solid lines are drawn if the interval is positive, and dashed lines are drawn if the interval is negative.
   hh/H = Ending hour to plot. 'hh' may range from zero to 23.
   tt/T = Number of hours defining the time interval to use for contouring, with a range from eight to 16.
   sss/S = Specifies the stations to use in the kinematic calculations. Three stations which define a triangle must be specified.
   aaa/A = Routing address for RDC or SDC.

Defaults:

In command line mode, defaults are initiated whenever a switch is omitted. In control file mode, defaults are initiated whenever a preformat field entry is omitted.

/Z = Base height of plots is zero (mean sea level).
/I = Contour interval for divergence and vorticity is 4×10^{-5} s^{-1}. Contour interval for vertical velocity is 10 cm/s.
/H = Produce contours for the period ending at the latest decoded hour.
/T = Contour 16 hours of data.
/S = None.
/A = None.

2. TKMAC.MC is a macro that generates UTF displayable products from IPF's. To run TKMAC.MC at the ADM, enter:

RUN:TKMAC

ERROR CONDITIONS

DASHER MESSAGES	MEANING
1. "MAPDF ERROR"	Program was unable to set up the window for extended memory. Reload save and overlay files from starter diskette, and rerun. If problem persists, call maintenance programmer.
2. "REMAP #1"	Couldn't map a block from extended memory into the window. Reload save and overlay files from starter diskette and rerun. If problem persists, call maintenance programmer.
3. "GETTING CHANNEL - 'file'"	Couldn't get I/O channel to 'file'. Probable system or disk problem.
4. "OPENING 'file'"	Couldn't open 'file'. Program not linked to or located in same directory as 'file'. Establish appropriate link to 'file'.
5. "CAN'T COMPUTE INVERSE 'stat1' 'stat2' 'stat3'	Couldn't compute the inverse of the triangle of stations. Choose different stations. 'stat1', 'stat2', and 'stat3' are the station ID's used in the triangle.

DASHER MESSAGES	MEANING
6. "NOT ENOUGH EXTENDED MEMORY AVAILABLE"	There is not enough extended memory to execute TSKIN. Set background to 128K.
7. "CREATING 'file'"	Couldn't create 'file'. Determine if 'file' exists. If so, delete it, and rerun program. If problem persists, call maintenance programmer.
8. "CAN'T FIND TYPE"	Couldn't find the type record (TS, CS, or PV) in WPCF.nn. Reedit the preformat and rerun CWPCF. If problem recurs, call maintenance programmer.
9. "KEY NOT FOUND"	The type of products used by TSKIN was not found in WPCF.nn. Reedit the preformat and rerun CWPCF. If problem persists, call maintenance programmer.
10. "READING WPCF GSINFO"	Couldn't read WPCF.nn. Ascertain that you are reading the correct file (nn). You may need to run WPSET to change the extension. If not, delete WPCF.nn, reedit preformat, and run CWPCF.
11. "READING 'file'"	Couldn't read 'file'. Delete 'file'. You may need to reload 'file' from starter diskette or recreate it by running another program.
12. "WRITING AP FILE" 13. "ADL WRITE"	Couldn't write to the TSKIN.AP file. Ascertain that TSKIN.AP is linked to the applications directory. Delete TSKIN.AP from the applications directory and rerun the program.
14. "PSWAP WRB"	Couldn't write the data to be contoured. Delete WPCD and rerun TSKIN. If problem persists, call maintenance programmer.
15. "MAPDF - PSWAP"	Couldn't initialize the window upon returning from the contour program. Reload save and overlay files from starter diskette

DASHER MESSAGES	MEANING
	and rerun. If problem persists, call maintenance programmer.
16. "WRITING - WPCD"	Couldn't write the first two RDOS blocks to the contour file. Delete WPCD and rerun TSKIN. If problem persists, call maintenance programmer.
17. "DEXTER ERROR= X"	TSKIN couldn't map a block from extended memory into the window. Reload save and overlay files from starter diskette and rerun. If problem persists, call maintenance programmer. 'X' is the FORTRAN error return.
18. "MXRDB ERROR IPC,IER= X,Y"	Couldn't write the data from the data file to extended memory. Delete the data file and OEDIT WP.CF. Set locations 1 through 4 to -1 (177777K) and rerun WPDEC. If problem persists, call maintenance programmer. 'Y' is the FORTRAN error code, and 'X' is the number of RDOS blocks written to extended memory.

DISPLAY CROSS SECTIONS OF HORIZONTAL WIND VECTORS

PART A: PROGRAM INFORMATION and INSTALLATION PROCEDURES

PROGRAM NAME: CSPLOT

AAL ID: GPH031
Revision No.: 02.00

PURPOSE: Create cross section graphic products of horizontal wind velocity and thermal wind.

PROGRAM INFORMATION:

Development Programmers:

Gary F. Battel
Joel T. Moeller

Location: Techniques Development Laboratory

Phone: 301-713-0056

Maintenance Programmers:

Gary F. Battel

Location: Techniques Development Laboratory

Phone: 301-713-0056

Language: FORTRAN IV/Rev. 5.57
Macro Assembler/Rev. 6.30

Type: Virtual Overlay

Save file and overlay file creation dates: CSPLOT.SV and CSPLOT.OL
Original release/Rev 01.00 - October 26, 1990
First revision/Rev 01.01 - April 4, 1991
Second revision/Rev 02.00 - February 12, 1993

Running time: 12 seconds per cross section

Extended memory: - 16K (Background set to 128).

Disk space: Program files - 113 RDOS blocks
Data files - 1,141 RDOS blocks (31 stations)

PROGRAM REQUIREMENTS:

Program files:

NAME
CSPLOT.SV
CSPLOT.OL

Data files:

NAME	Disk location	READ/WRITE	COMMENTS
WPDATA	User directory	R	Decoded profiler data.
WPSTAT	User directory	R	Station directory.

NAME	Disk location	READ/WRITE	COMMENTS
WP.CF	User directory	R	File which contains the name of the expanded options file to use in the current run.
WPCF.nn	Master directory	R	The output wind profiler expanded options file. The extension 'nn' is a numerical indicator for the file, which may range from '00' to '99'.
CSPLOT.AP	User directory	W	Holds the names of the AFOS products created on the last run. To display this file on ADM, enter: 'DSP:CSPLOT.AP'.

AFOS products:

ID	ACTION	COMMENTS
NMCGPHxxx	Stored	One plot for each station and product selected. The 'xxx' identifies the station, the product, and the product type (cross sections).

LOAD LINE

RLDR BCONVRT BINIT BMOVE BSTRING DADDI GPREP INITAR JULIAN LVCTR COLPOS SDDVD SDMPY SEARCH TROUBL UVTDS WMOV CSPREV CSPLOT/S [CSDEXT CSLOC CSMXDEX CSXRDB DECK DEXTR FONEHR GETAREA, CRFILE GKIDS GSINFO GTYPE IPANDEC RDBLK RSTDR SVARDEF SWSET, ASCDD BHPLOT DISTANCE PHTIC PSNAM RECALC, CSTHERM CSFSTART EXPUV XPMSHR XPQC FPSMO HORIZONTAL, CSBARBS CSBBMS CSBBQC, CSPARXT CSRDKEY ADL CAP FSREC GFMT WPPROD]/V CSPLOT GWIND OCHN SLARG PVADJST FLROW AG.LB BG.LB XMEM.LB UTIL.LB TOP.LB FORT.LB AFOSE.LB

PROGRAM INSTALLATION

1. Move CSPLOT.SV and CSPLOT.OL to an applications directory. Create links from the master directory to CSPLOT.SV, CSPLOT.OL, and CSPLOT.AP.

2. Verify that the background has been allocated to at least 128K. The RDOS 'GMEM' command will reveal this information, and the command 'SMEM 128' will set the grounds.

3. Verify that WPDATA, WP.CF, WPCF.nn, and WPSTAT are linked to, or located in the same directory from which CSPLOT is executed.

DISPLAY CROSS SECTIONS OF HORIZONTAL WIND VECTORS

PART B: PROGRAM EXECUTION and ERROR CONDITIONS

PROGRAM NAME: CSPLOT AAL ID: GPH031
Revision No.: 02.00

PROGRAM EXECUTION:

1. To run CSPLOT at the ADM, enter:

   CSPLOT will run in control file mode only when all global product switches (i.e., /B, /T) are omitted. At the ADM, enter:

   RUN:CSPLOT/Q aaa/A

   CSPLOT will run in the command line mode only when a global product switch is specified. Enter:

   RUN:CSPLOT/Q/B/N/T zz/Z hh/H ll/L sss/S aaa/A

   Definition of switches:

   GLOBAL

   /Q = Skip processing (quit) if number of newly decoded input data versions is zero.
   /B = Produce horizontal wind barb plots.
   /N = Do not display any horizontal wind that did not pass both quality control checks (used only with /B).
   /T = Produce thermal wind plots.

   Defaults:

   In command line mode, defaults are initiated whenever a switch is omitted. In control file mode, defaults are initiated whenever a preformat field entry is omitted.

   /Q = Do not skip processing, even if the decoder has not decoded new data.
   /B = Do not produce horizontal wind barb plots.
   /N = Display horizontal winds with flags to indicate which data have not passed both quality control checks.
   /T = Do not produce thermal wind plots.

   LOCAL

   zz/Z = Specifies the base height for the plots. The height is in hundreds of meters, with a range from zero to 99.
   hh/H = Ending hour to plot. 'hh' may range from zero to 23.
   ll/L = Height increment (in multiples of 250 m) for which to calculate the thermal wind. 'll' can range from one to 16.
   sss/S = Specifies the stations to plot. As many as eight stations and switches may be specified.
   aaa/A = Routing address for RDC or SDC.

Defaults:

In command line mode, defaults are initiated whenever a switch is omitted. In control file mode, defaults are initiated whenever a preformat field entry is omitted.

/Z = Base height is zero (sea level).
/H = Plot the most recently decoded hour.
/L = Height increment is four 250-m levels (1,000 m).
/S = None.
/A = None.

ERROR CONDITIONS

DASHER MESSAGES	MEANING
1. "GETTING CHANNEL - 'file'"	Couldn't obtain I/O channel to 'file'. Probable system or disk problem.
2. "OPENING 'file'"	Couldn't open 'file'. Program not linked to, or located in same directory as 'file'. Establish appropriate links.
3. "OVOPN ERROR"	Problem with the overlay file. Determine that the overlay file resides in the applications directory and that there is a link to it. If the problem recurs, reload the save and overlay files from the starter diskette and rerun the program. If the problem persists, call maintenance programmer.
4. "MAPDF ERROR"	Program could not set up the window for extended memory use. Reload save and overlay files from starter diskette and rerun. If problem persists, call maintenance programmer.
5. "NOT ENOUGH EXTENDED MEMORY AVAILABLE"	There is not enough extended memory available for CSPLOT to execute. Set background to 128K.
6. "CREATING 'file'"	Couldn't create 'file'. Determine if 'file' exists. If so, delete it, and rerun program. If problem persists, call maintenance programmer.

DASHER MESSAGES	MEANING
7. "READING 'file'"	Couldn't read 'file'. Delete 'file'. You may need to reload 'file' from starter diskette or recreate it.
8. "UTF ERROR - NMCGPHxxx"	This message results from either of two problems. The problem may be that there is no key in the database for NMCGPHxxx. Add NMCGPHxxx to the wish list and rerun program. The other possibility is that the area reserved for holding graphic instructions was exceeded by the current graphics plot. Call maintenance programmer.
9. "SPACE PROBLEMS"	The area reserved for holding graphics instructions was exceeded by current graphics plot. Call maintenance programmer.
10. "WRITING AP FILE" 11. "ADL WRITE"	Couldn't write to the CSPLOT.AP file. Verify that CSPLOT.AP is linked to the applications directory. Delete CSPLOT.AP from the applications directory, and rerun program.
12. "CAN'T FIND TYPE"	Couldn't find the type of record (TS, CS, or PV) in WPCF.nn. Reedit preformat, and run CWPCF. If problem persists, call maintenance programmer.
13. "READING WPCF GSINFO"	Couldn't read WPCF.nn. Verify that you are reading the correct file (nn). You may need to run WPSET to change file extension. If not, delete WPCF.nn, reedit preformat, and run CWPCF.
14. "KEY NOT FOUND"	The type of products used by CSPLOT was not found in WPCF.nn. Reedit the preformat and rerun CWPCF. If problem persists, call maintenance programmer.
15. "DEXTER ERROR IER= X"	CSPLOT couldn't map a block from extended memory into the window. Reload save and overlay files from starter diskette and rerun. If problem persists, call

DASHER MESSAGES	MEANING
	maintenance programmer. 'X' is the FORTRAN error return.
16. "MXRDB ERROR IPC,IER= X,Y" 17. "READING DATA FILE NC IPC, IER= X,Y"	Couldn't read the data file from disk to extended memory. Delete the data file. OEDIT WP.CF, set locations 1 through 4 to -1 (177777K), and rerun WPDEC. If problems persist, call maintenance programmer. 'Y' is the actual FORTRAN error, and 'X' is the number of RDOS blocks transferred to extended memory.

DISPLAY CROSS SECTIONS OF CONTOURED PRODUCTS

PART A: PROGRAM INFORMATION and INSTALLATION PROCEDURE

PROGRAM NAME: CSCON

AAL ID: GPH031
Revision No.: 02.00

PURPOSE: Produce cross section gridpoint values of the components of the wind parallel and perpendicular to the plane of the cross section, the w component of the wind, and normalized returned power. Contour displays are produced by swapping to WPCON. The macro CCMAC.MC must be run after CSCON to put the Internal Plot Files (IPF's) into displayable graphic files.

PROGRAM INFORMATION:

Development Programmers:

Joel T. Moeller
Gary F. Battel

Location: Techniques Development Laboratory

Phone: 302-713-0056

Maintenance Programmer:

Gary F. Battel

Location: Techniques Development Laboratory

Phone: 301-713-0056

Language: FORTRAN IV/Rev 5.57
Macro Assembler/Rev. 6.30

Type: Overlay

Save file and overlay file creation date: CSCON.SV and CSCON.OL
Original release/Rev 01.00 - April 18, 1991
First Revision/Rev 02.00 - February 22, 1993

Running time: 11 seconds per plot. See also WPCON.

Extended memory - 23K (Background set to 128).

Disk space: Program files - 124 RDOS blocks
Data files - 1,175 RDOS blocks (31 stations)

PROGRAM REQUIREMENTS

Program files:

NAME
CSCON.SV
CSCON.OL

Data files:

NAME	Disk location	READ/WRITE	COMMENTS
WPDATA	User directory	R	Decoded profiler data.
WPSTAT	User directory	R	Station directory.

NAME	Disk location	READ/WRITE	COMMENTS
CCMAC.MC	User directory	W	Macro that converts all the IPF's into UTF displayable graphic files.
WP.CF	User directory	R/W	File which contains the name of the expanded options file to use in current run.
WPCF.nn	Master directory	R	Expanded options file. The 'nn' extension is a numerical indicator for the file, which may range from '00' to '99' with default of '00'.
WPCD	User directory	W	Holds the profiler data to be contoured.
CSCON.AP	User directory	W	Holds the names of the AFOS products created on the last run. To display CSCON.AP on ADM, enter: 'DSP:CSCON.AP'.

AFOS products:

ID	ACTION	COMMENTS
NMCGPHxxx	Stored	One plot for each station and product selected. The 'xxx' identifies the station, the product, and the product type (cross sections).

LOAD LINE

```
RLDR BCONVRT BINIT BSTRING DADDI DECK FLROW INITAR IPANDEC JULIAN SDMPY
     SEARCH SLARG TROUBL SDDVD WMOV 2000/N CSCON BMOVE COLPOS OCHN AWRITE
     CRFILE CSCREV 13/C CSCON/S [GTYPE CSLOC CSPARXT CSRDKEY CSSWCH
     CSSWSET FSREC GKIDS GSINFO RDBLK RSTDR, CSMXDEX CSDEXT CSXRDB DEXTR
     FONEHR GETAREA PVADJST, CSSEPUV CKMSHR CKQC CSRPOWER CSWCOMP
     DISTANCE FLCOL FL2ROW ORTHOG UVMOV, INTRPCOL CSGL2SL FMXCOL
     HORIZONTAL MOVDAT2 SPLINE VERTSPL, ADL CAP CIJMIN CIPFN CMACRO PSWAP
     WPPROD SLAB SMOOTH SSWAP] AG.LB BG.LB XMEM.LB UTIL.LB TOP.LB FORT.LB
     SYS.LB AFOSE.LB
```

PROGRAM INSTALLATION

1. Move CSCON.SV and CSCON.OL to an applications directory. Create links in the master directory to CSCON.SV, CSCON.OL, CSCON.AP, CCMAC.MC, and WPCD.

2. Verify that the background has been allocated to at least 128K. The RDOS 'GMEM' command will reveal this information, and the command 'SMEM 128' will set the grounds.

3. Verify that WPDATA, WPCF.nn, WP.CF, CCMAC.MC, and WPSTAT are linked to the applications directory.

4. Ensure that WPCON has been properly installed.

DISPLAY CROSS SECTIONS OF CONTOURED PRODUCTS

PART B: PROGRAM EXECUTION and ERROR CONDITIONS

PROGRAM NAME: CSCON AAL ID: GPH031
Revision No.: 02.00

PROGRAM EXECUTION

1. CSCON will run in the control file mode only when all global product switches (i.e., /L, /R, /W, /P) are omitted. At the ADM, enter:

   RUN:CSCON/Q aaa/A

   CSCON will run in the command line mode only when a global product switch is specified. Enter:

   RUN:CSCON/Q/L/R/W/P zz/Z hh/H ii/I sss/S aaa/A

   Definition of switches:

   GLOBAL

   /Q - Skip processing (quit) if number of newly decoded input data versions is zero.
   /L - Produce contours of the wind component parallel to the plane of the cross section.
   /R - Produce contours of the wind component perpendicular to the plane of the cross section.
   /W - Produce w component contours.
   /P - Produce normalized returned power contours.

   Defaults:

   In command line mode, defaults are initiated whenever a switch is omitted. In control file mode, defaults are initiated whenever a preformat field entry is omitted.

   /Q - Do not skip processing, even if the decoder has not decoded new data.
   /L - Do not produce contours of the wind component parallel to the plane of the cross section.
   /R - Do not produce contours of the wind component perpendicular to the plane of the cross section.
   /W - Do not produce w component contours.
   /P - Do not produce normalized returned power contours.

   LOCAL

   zz/Z - Specifies the base height for the contours. The height is in hundreds of meters with a range from zero to 99.
   hh/H - Hour to plot. 'hh' may range from zero to 23.
   ii/I - Specifies the contour interval for all products, ranging from one to 99. If the selected contour interval is too low or too high, the program will override this selection.

sss/S = Specifies the stations to be plotted. Up to eight sets of stations and switches may be specified.
aaa/A = Routing address for RDC or SDC.

Defaults:

In command line mode, defaults are initiated whenever a switch is omitted. In control file mode, defaults are initiated whenever a preformat field entry is omitted.

/Z = Base height for plots is zero (sea level).
/H = Produce contours from the latest decoded hour.
/I = Contour intervals: 10 kt for parallel and perpendicular components; 10 cm/s for w component; and 10 dB for returned power.
/S = None.
/A = None.

2. Run CCMAC.MC. CCMAC.MC is a macro that generates UTF displayable products from IPF's. At the ADM, enter:

RUN:CCMAC

ERROR CONDITIONS

DASHER MESSAGES	MEANING
1. "MAPDF ERROR"	Program could not create the window for extended memory. Reload save and overlay file from diskette and rerun. If problem persists, call maintenance programmer.
2. "NOT ENOUGH EXTENDED MEMORY AVAILABLE"	There is not enough extended memory available for CSCON to execute. Set background to 128K.
3. "GETTING CHANNEL 'file'"	Couldn't get I/O channel to 'file'. Probable system or disk problem.
4. "OPENING 'file'"	Couldn't open 'file'. Program not linked to or located in same directory as 'file'. Establish appropriate links to 'file'.
5. "CREATING 'file'"	Couldn't create 'file'. Program not linked to, or located in same directory as 'file'. Establish appropriate link to 'file'.

DASHER MESSAGES	MEANING
6. "WRITING AP FILE"	Couldn't write to the CSCON.AP file. Ascertain that CSCON.AP is linked to the applications directory. Delete CSCON.AP from the applications directory and rerun program.
7. "ADL WRITE"	Couldn't write to CSCON.AP. Ascertain that CSCON.AP is linked to the applications directory. Delete CSCON.AP from the applications directory and rerun program.
8. "CAN'T FIND TYPE"	Couldn't find the type of record (TS, CS, or PV) in WPCF.nn. Reedit the preformat and rerun CWPCF. If problem recurs, call maintenance programmer.
9. "KEY NOT FOUND"	The type of products used by CSCON was not found in WPCF.nn. Reedit the preformat and rerun CWPCF. If problem persists, call maintenance programmer.
10. "READING WPCF GSINFO"	Couldn't read WPCF.nn. Determine if you are reading the correct file (nn). You may need to run WPSET to change the extension. If not, delete WPCF.nn, reedit the preformat, and run CWPCF.
11. "READING 'file'"	Couldn't read 'file'. Delete 'file'. You may need to reload 'file' from starter diskette, or recreate it by running another program.
12. "WRITING WP.CF"	Couldn't update WP.CF before storing the message product in the database. Delete WP.CF. Rerun WPSET, WPDEC, and CSCON. If problem persists, call maintenance programmer.
13. "PSWAP WRB"	Couldn't write the data to be contoured. Delete WPCD and rerun CSCON. If problem persists, call maintenance programmer.

DASHER MESSAGES	MEANING
14. "MAPDF - PSWAP"	Couldn't initialize the extended memory window upon returning from the contour program. Reload save and overlay files from the starter diskette and rerun. If problem persists, call maintenance programmer.
15. "WRITING WPCD"	Couldn't write the first two RDOS blocks to the contour file. Delete WPCD and rerun CSCON. If problem persists, call maintenance programmer.
16. "DEXTER ERROR= X"	CSCON couldn't map a block from extended memory into the window. Reload save and overlay files from diskette and rerun. If problem persists, call maintenance programmer. 'X' is the FORTRAN error return.
17. "MXRDB ERROR IPC,IER= X,Y" 18. "READING DATA FILE NC IPC, IER= X,Y"	Couldn't write the data from the data file to extended memory. Delete the data file and OEDIT WP.CF. Set locations 1 through 4 to -1 (177777K) and rerun WPDEC. If problem persists, call maintenance programmer. 'Y' is FORTRAN error code, and 'X' is number of RDOS blocks written to extended memory.

DISPLAY PLAN VIEWS OF HORIZONTAL WIND VECTORS

PART A: PROGRAM INFORMATION and INSTALLATION PROCEDURES

PROGRAM NAME: PVPLOT

AAL ID: GPH031
Revision No.: 02.00

PURPOSE: Create plan view plots of horizontal wind velocity and thermal wind.

PROGRAM INFORMATION:

Development Programmer:

Joel T. Moeller

Location: Techniques Development Laboratory

Phone: 301-713-0056

Maintenance Programmer:

Gary F. Battel

Location: Techniques Development Laboratory

Phone: 301-713-0056

Language: FORTRAN IV/Rev. 5.57
Macro Assembler/Rev. 6.30

Type: Virtual Overlay

Save file and overlay file creation dates: PVPLOT.SV and PVPLOT.OL
Original release/Rev 01.00 - November 6, 1990
First revision/Rev 01.01 - April 4, 1991
Second revision/Rev 02.00 - February 12, 1993

Running time: 45 seconds for all pressure levels for both products

Extended memory: - 16K (Background set to 128).

Disk space: Program files - 105 RDOS blocks
Data files - 1,141 RDOS blocks (31 stations)

PROGRAM REQUIREMENTS:

Program files:

NAME
PVPLOT.SV
PVPLOT.OL

Data files:

NAME	Disk location	READ/WRITE	COMMENTS
WPDATA	User directory	R	Decoded profiler data.
WPSTAT	User directory	R	Station directory.
WP.CF	User directory	R	File which contains the name of the expanded options file to use in current run.

NAME	Disk location	READ/WRITE	COMMENTS
WPCF.nn	Master directory	R	The output wind profiler expanded options file. The 'nn' extension is a numerical indicator for the file, which may range from '00' to '99'.
PVPLOT.AP	User directory	W	Holds names of the AFOS products created on the last run. To display this file on the ADM, enter: 'DSP:PVPLOT.AP'.

AFOS products:

ID	ACTION	COMMENTS
NMCGPHxxx	Stored	One plot for each station and product selected. The 'xxx' identifies the station, the product, and the product type (plan views).

LOAD LINE

```
RLDR BCONVRT BMOVE BSTRING INITAR IPANDEC JULIAN LVCTR OCHN SEARCH TROUBL
     UVTDS WMOV PVPREV PVPLOT/S [DECK GETAREA FONEHR PVADJST PVDEXT2 XRDB
     XTRAC, CRFILE GKIDS GPREP GTYPE PVINFO RDBLK RSTDR, ADL CAP FREC
     GFMT PARX PVLEG WPPROD, ASCDD PVBARB PVBBMS PVBBQC SFC, COLPOS DADDI
     PVXPUV XPMSHR XPQC FLROW FPSMO HORIZONTAL PVTHERM SDDVD SDMPY]/V
     PVPLOT GWIND BINIT SLARG AG.LB BG.LB XMEM.LB UTIL.LB TOP.LB
     THERMO.LB FORT.LB AFOSE.LB
```

PROGRAM INSTALLATION

1. Move PVPLOT.SV and PVPLOT.OL to an applications directory. Create links from the master directory to PVPLOT.SV, PVPLOT.OL, and PVPLOT.AP.

2. Verify that the background has been allocated to at least 128K. The RDOS 'GMEM' command will reveal this information, and the command 'SMEM 128' will set the grounds.

3. Verify that WPDATA, WP.CF, WPCF.nn, and WPSTAT are linked to, or located in the same directory from which PVPLOT is executed.

DISPLAY PLAN VIEWS OF HORIZONTAL WIND VECTORS

PART B: PROGRAM EXECUTION and ERROR CONDITIONS

PROGRAM NAME: PVPLOT

AAL ID: GPH031
Revision No.: 02.00

PROGRAM EXECUTION:

1. PVPLOT will run in the control file mode only when all global product switches (i.e., /B, /T) are omitted. At the ADM, enter:

   RUN:PVPLOT/Q aaa/A

   PVPLOT will run in the command line mode only when a global product switch is specified.

   RUN:PVPLOT/Q/B/N/T hh/H ll/L p/P aaa/A

   Definition of switches:

   GLOBAL

   /Q = Skip processing (quit) if number of newly decoded input data versions is zero.
   /B = Produce horizontal wind barb plots.
   /N = Do not display any horizontal wind that did not pass both quality control checks (used only with /B).
   /T = Produce thermal wind plots.

   Defaults:

   In command line mode, defaults are initiated whenever a switch is omitted. In control file mode, defaults are initiated whenever a preformat field entry is omitted.

   /Q = Do not skip processing, even if the decoder has not decoded new data.
   /B = Do not produce horizontal wind barb plots.
   /N = Display horizontal winds with flags that indicate which quality control check the data have failed, if any.
   /T = Do not produce thermal wind plots.

   LOCAL

   hh/H = Hour to plot for this run. Any hour (zero to 23) within 24 hours prior to the last decoded hour may be requested.
   ll/L = Height increment (in multiples of 250 m) for which to calculate the thermal wind. 'll' can range from one to 16.
   p/P = Pressure levels for this run. Use the first number of pressure to specify levels: 200, 300, 400, 500, 600, 700, 850, 900. 0 specifies surface data, and a, b, c, d specify the lowest four range gates. You may specify as many pressure levels as needed.
   aaa/A = Routing address for RDC or SDC.

Defaults:

In command line mode, defaults are initiated whenever a switch is omitted. In control file mode, defaults are initiated whenever a preformat field entry is omitted.

/H = Plot the last decoded hour.
/L = Height increment is four 250-m levels (1,000 m).
/P = Plots are created for all levels.
/A = None.

ERROR CONDITIONS

DASHER MESSAGES	MEANING
1. "GETTING CHANNEL - 'file'"	Couldn't obtain I/O channel to 'file'. Probable system or disk problem.
2. "OPENING 'file'"	Couldn't open 'file'. Program not linked to, or located in same directory as 'file'. Establish appropriate links.
3. "OVOPN ERROR"	Problem with the overlay file. Determine that the overlay file resides in the applications directory and that there is a link to it. If the problem recurs, reload the save and overlay files from the starter diskette and rerun the program. If the problem persists, call maintenance programmer.
4. "MAPDF ERROR"	Program could not set up the window for extended memory use. Reload save and overlay files from starter diskette and rerun. If problem persists, call maintenance programmer.
5. "NOT ENOUGH EXTENDED MEMORY AVAILABLE"	There is not enough extended memory available for PVPLOT to execute. Set background to 128K.
6. "CREATING 'file'"	Couldn't create 'file'. Determine if 'file' exists. If so, delete it and rerun program. If problem persists, call maintenance programmer.
7. "READING 'file'"	Couldn't read 'file'. Delete 'file'. You may need to reload

DASHER MESSAGES	MEANING
	'file' from starter diskette or recreate it.
8. "UTF ERROR - NMCGPHxxx"	This message results from either of two problems. The problem may be that there is no key in the database for NMCGPHxxx. Add NMCGPHxxx to the wish list of the database, and rerun program. The other possibility is that the area reserved for holding instructions was exceeded by the current graphics plot. Call maintenance programmer.
9. "SPACE PROBLEMS"	The area reserved for holding graphics instructions was exceeded by the graphics plot. Call maintenance programmer.
10. "WRITING AP FILE" 11. "ADL WRITE"	Couldn't write to the PVPLOT.AP file. Verify that PVPLOT.AP is linked to the applications directory. Delete PVPLOT.AP from the applications directory, and rerun program.
12. "CAN'T FIND TYPE"	Couldn't find the type of record (TS, CS, or PV) in WPCF.nn. Reedit preformat, and run CWPCF. If problem persists, call maintenance programmer.
13. "READING WPCF PVINFO"	Couldn't read WPCF.nn. Determine that you are reading the correct file (nn). You may need to run WPSET to change the file extension. If not, delete WPCF.nn, reedit preformat, and run CWPCF.
14. "KEY NOT FOUND"	The type of products used by PVPLOT was not found in WPCF.nn. Reedit the preformat and rerun CWPCF. If problem persists, call maintenance programmer.
15. "DEXTER ERROR IER= X"	PVPLOT couldn't map a block from extended memory into the window. Reload save and overlay files from starter diskette and rerun. If problem persists, call

DASHER MESSAGES	MEANING
	maintenance programmer. 'X' is the FORTRAN error return.
16. "MXRDB ERROR IPC,IER= X,Y" 17. "READING DATA FILE NC IPC, IER= X,Y"	Couldn't read the data file from disk to extended memory. Delete the data file, OEDIT WP.CF, set locations 1 through 4 to -1 (177777K), and rerun WPDEC. If problems persist, call maintenance programmer. 'Y' is the actual FORTRAN error, and 'X' is the number of RDOS blocks transferred to extended memory.
18. "LAT-LON COORD ERROR"	The latitude or longitude for a station was not within the domain of the North American map background. Probable BUFR input data error.

DISPLAY PLAN VIEWS OF CONTOURED PRODUCTS

PART A: PROGRAM INFORMATION and INSTALLATION PROCEDURE

PROGRAM NAME: PVCON

AAL ID: GPH031
Revision No.: 02.00

PURPOSE: Produce plan view gridpoint values of the u, v, and w components of the wind; wind speed; streamlines; derived divergence and vorticity; normalized returned power; and time differences of the u, v, and w components; and divergence and vorticity. Contoured displays are produced by swapping to WPCON. The macro PCMAC.MC must be run after PVCON to put the Internal Plot Files (IPF's) into displayable graphics files.

PROGRAM INFORMATION:

Development Programmers:

Joel T. Moeller
Gary F. Battel

Location: Techniques Development Laboratory

Phone: 301-713-0056

Maintenance Programmer:

Gary F. Battel

Location: Techniques Development Laboratory

Phone: 301-713-0056

Language: FORTRAN IV/Rev 5.57
Macro Assembler/Rev. 6.30

Type: Overlay

Save file and overlay file creation date: PVCON.SV and PVCON.OL
Original release/Rev 01.00 - April 17, 1991
First revision/Rev 02.00 - February 18, 1993

Running time: 12 seconds per plot. See also WPCON.

Extended memory - 26K (Background set to 128).

Disk space: Program files - 110 RDOS blocks
Data files - 1,175 RDOS blocks (31 stations)

PROGRAM REQUIREMENTS

Program files:

NAME
PVCON.SV
PVCON.OL

Data files:

NAME	Disk location	READ/WRITE	COMMENTS
WPDATA	User directory	R	Decoded profiler data.
WPSTAT	User directory	R	Station directory.
PCMAC.MC	User directory	W	Macro that converts all the IPF's into UTF displayable graphic files.
WP.CF	User directory	R/W	File which contains the name of the expanded options file to use in current run.
WPCF.nn	Master directory	R	Expanded options file. The extension 'nn' is a numerical indicator for the file, which may range from '00' to '99'.
WPCD	User directory	W	Holds the gridded profiler data to be contoured.
PVCON.AP	User directory	W	Holds the names of the AFOS products created on the last run. To display PVCON.AP on ADM, enter: 'DSP:PVCON.AP'.

AFOS products:

ID	ACTION	COMMENTS
NMCGPHxxx	Stored	One plot for each station and product selected. The 'xxx' identifies the station, the product, and the product type (plan views).

LOAD LINE

RLDR BCONVRT BMOVE CKPAR INITAR IPANDEC JULIAN OCHN PVADJST SEARCH SLARG TROUBL CRFILE PVCREV WMOV 2000/N PVCON PVCON/S 13/C [BINIT BSTRING COMLINE FPREC GKIDS GTYPE PVGSINFO PVPARX RDBLK RI RSTDRC PREP, DECK ELLIJ FHOUR2 TAG1 TAG2 GETAREA HOURDIF MXRDB2 OAST PVDEXT3 PVEXTR3 QC QC2 TDIF UVTDS, CALCEC CALTRP CRCT FGUESS ITRP SMOTH SPUVW WCHK1 WFSTG, ADL PVCAP PVCIPFN CLAT COMPDV PLANSWAP PROD PSWAP PVCMACRO SLAB] BCDW FJPL AWRITE BG.LB XMEM.LB UTIL.LB TOP.LB FORT.LB AFOSE.LB

PROGRAM INSTALLATION

1. Move PVCON.SV and PVCON.OL to an applications directory. Create links in the master directory to PVCON.SV, PVCON.OL, PVCON.AP, PCMAC.MC, and WPCD.

2. Verify that background has been allocated to at least 128K. The RDOS command 'GMEM' will reveal this information, and the command 'SMEM 128' will set the grounds.

3. Verify that WPDATA, WPCF.nn, WP.CF, PCMAC.MC, and WPSTAT are linked to the applications directory.

4. Ensure that WPCON has been properly installed.

DISPLAY PLAN VIEWS OF CONTOURED PRODUCTS

PART B: PROGRAM EXECUTION and ERROR CONDITIONS

PROGRAM NAME: PVCON AAL ID: GPH031
Revision No.: 02.00

PROGRAM EXECUTION

1. PVCON will run in the control file mode only when all global product switches (i.e., all global switches except /Q) are omitted. At the ADM, enter:

   RUN:PVCON/Q aaa/A

   PVCON will run in the command line mode only when a global product switch is specified. Enter:

   RUN:PVCON/Q/S/L/W/P/D/V/A/B/C/X/Y p/P hh/H ii/I aaa/A

   Definition of switches:

   GLOBAL

   /Q - Skip processing (quit) if number of newly decoded input data versions is zero.
   /S - Produce wind speed contours.
   /L - Produce streamlines.
   /W - Produce w component contours.
   /P - Produce normalized returned power contours.
   /D - Produce derived divergence contours.
   /V - Produce derived absolute vorticity contours.
   /A - Produce contours of the time difference of the u component values.
   /B - Produce contours of the time difference of the v component values.
   /C - Produce contours of the time difference of the w component values.
   /X - Produce contours of the time difference of derived divergence values.
   /Y - Produce contours of the time difference of derived absolute vorticity values.

   Defaults:

   In command line mode, defaults are initiated whenever a switch is omitted. In control file mode, defaults are initiated whenever a preformat field entry is omitted.

   /Q - Do not skip processing, even if the decoder has not decoded new data.
   /S - Do not produce wind speed contours.
   /L - Do not produce streamlines.
   /W - Do not produce w component contours.
   /P - Do not produce normalized returned power contours.

/D = Do not produce derived divergence contours.
/V = Do not produce derived absolute vorticity contours.
/A = Do not produce contours of the time difference of the u component values.
/B = Do not produce contours of the time difference of the v component values.
/C = Do not produce contours of the time difference of the w component values.
/X = Do not produce contours of the time difference of derived divergence values.
/Y = Do not produce contours of the time difference of derived absolute vorticity values.

LOCAL

hh/H = Hour to plot for this run. Any hour (zero to 23) within 24 hours prior to the last decoded hour may be requested.
p/P = Pressure levels for this run. You may specify as many as needed. Use the first number of pressure to specify levels: 200, 300, 400, 500, 600, 700, 850, 900. 0 specifies surface data, and a, b, c, d specify the lowest four range gates.
aaa/A = Routing address for RDC or SDC.
ii/I = Specifies the contour interval for all products, ranging from one to 99. If the selected contour interval is too low or too high, the program will override this selection.
dd/D = Number of hours from which to compute the time difference products. 'dd' may range from one to 23.

Defaults:

In command line mode, defaults are initiated whenever a switch is omitted. In control file mode, defaults are initiated whenever a preformat field entry is omitted.

/H = Plot the last decoded hour.
/P = Plots are created for all levels.
/I = Contour intervals: 10 kt for wind speed, and time difference of u and v component values; 10 cm/s for w component and time difference of w component values; 10 dB for returned power; and .00004 s^{-1} for derived divergence, derived absolute vorticity, and time difference of derived divergence and absolute vorticity values.
/A = None.
/D = Three hours time difference.

2. Run PCMAC.MC. PCMAC.MC is a macro that generates UTF displayable products from IPF's. At the ADM, enter:

RUN:PCMAC

ERROR CONDITIONS

DASHER MESSAGES	MEANING
1. "MAPDF ERROR"	Program could not create the window for extended memory. Reload save and overlay file from diskette and rerun. If problem persists, call maintenance programmer.
2. "NOT ENOUGH EXTENDED MEMORY AVAILABLE"	There is not enough extended memory available for PVCON to execute. Set background to 128K.
3. "GETTING CHANNEL 'file'"	Couldn't get I/O channel to 'file'. Probable system or disk problem.
4. "OPENING 'file'"	Couldn't open 'file'. Program not linked to or located in same directory as 'file'. Establish appropriate links to 'file'.
5. "CREATING 'file'"	Couldn't create 'file'. Program not linked to, or located in same directory as 'file'. Establish appropriate link to 'file'.
6. "WRITING AP FILE"	Couldn't write to the PVON.AP file. Ascertain that PVCON.AP is linked to the applications directory. Delete PVCON.AP from the applications directory and rerun program.
7. "ADL WRITE"	Couldn't write to PVCON.AP. Ascertain that PVCON.AP is linked to the applications directory. Delete PVCON.AP from the applications directory and rerun program.
8. "CAN'T FIND TYPE"	Couldn't find the type of record (TS, CS, or PV) in WPCF.nn. Reedit the preformat and rerun CWPCF. If problem recurs, call maintenance programmer.
9. "KEY NOT FOUND"	The type of products used by PVCON was not found in WPCF.nn. Reedit the preformat and rerun

DASHER MESSAGES	MEANING
	CWPCF. If problem persists, call maintenance programmer.
10. "READING WPCF GSINFO"	Couldn't read WPCF.nn. Determine if you are reading the correct file (nn). You may need to run WPSET to change the extension. If not, delete WPCF.nn, reedit the preformat, and run CWPCF.
11. "READING 'file'"	Couldn't read 'file'. Delete 'file'. You may need to reload 'file' from starter diskette, or recreate it by running another program.
12. "WRITING WP.CF"	Couldn't update WP.CF before storing the message product in the database. Delete WP.CF. Rerun WPSET, WPDEC, and PVCON. If problem persists, call maintenance programmer.
13. "PSWAP WRB"	Couldn't write the data to be contoured. Delete WPCD and rerun PVCON. If problem persists, call maintenance programmer.
14. "MAPDF - PSWAP"	Couldn't initialize the extended memory window upon returning from the contour program. Reload save and overlay files from the starter diskette and rerun. If problem persists, call maintenance programmer.
15. "WRITING WPCD"	Couldn't write the first two RDOS blocks to the contour file. Delete WPCD and rerun PVCON. If problem persists, call maintenance programmer.
16. "DEXTER ERROR= X"	PVCON couldn't map a block from extended memory into the window. Reload save and overlay files from diskette and rerun. If problem persists, call maintenance programmer. 'X' is the FORTRAN error return.

DASHER MESSAGES	MEANING
17. "MXRDB ERROR IPC,IER= X,Y" 18. "READING DATA FILE NC IPC, IER= X,Y"	Couldn't write data from data file to extended memory. Delete the data file and OEDIT WP.CF. Set locations 1 through 4 to -1 (177777K) and rerun WPDEC. If problem persists, call maintenance programmer. 'Y' is the FORTRAN error code, and 'X' is the number of RDOS blocks written to extended memory.

DISPLAY HODOGRAPHS OF HORIZONTAL WIND VECTORS

PART A: PROGRAM INFORMATION and INSTALLATION PROCEDURES

PROGRAM NAME: HHPLOT

AAL ID: GPH031
Revision No.: 01.00

PURPOSE: Create hodograph plots of horizontal wind velocity, and numerical summaries of potential storm-relative wind components: mean wind, storm motion, wind shear, storm inflow, streamwise vorticity, and helicity.

PROGRAM INFORMATION:

Development Programmers:

Michael A. Petrie
Gary F. Battel

Location: Techniques Development Laboratory

Phone: 301-713-0056

Maintenance Programmer:

Gary F. Battel

Location: Techniques Development Laboratory

Phone: 301-713-0056

Language: FORTRAN IV/Rev. 5.57
Macro Assembler/Rev. 6.30

Type: Virtual Overlay

Save file and overlay file creation dates: HHPLOT.SV and HHPLOT.OL
Original release/Rev 01.00 - February 19, 1993

Running time: 8 seconds per station

Extended memory: - 16K (Background set to 128).

Disk space: Program files - 125 RDOS blocks
Data files - 1,141 RDOS blocks (31 stations)

PROGRAM REQUIREMENTS:

Program files:

NAME
HHPLOT.SV
HHPLOT.OL

Data files:

NAME	Disk location	READ/WRITE	COMMENTS
WPDATA	User directory	R	Decoded profiler data.
WPSTAT	User directory	R	Station directory.

NAME	Disk location	READ/WRITE	COMMENTS
WP.CF	User directory	R	File which contains the name of the expanded options file to use in current run.
WPCF.nn	Master directory	R	The output wind profiler expanded options file. The 'nn' extension is a numerical indicator for the file, which may range from '00' to '99'.
HHPLOT.AP	User directory	W	Holds the names of the AFOS products created on the last run. To display this file on ADM, enter: 'DSP:HHPLOT.AP'.

AFOS products:

ID	ACTION	COMMENTS
NMCGPHxxx	Stored	One plot for each station and product selected. The 'xxx' identifies the station, the product, and the product type (hodographs).

LOAD LINE

RLDR BCONVRT BINIT BMOVE INITAR JULIAN SEARCH SLARG TROUBL UVTDS HHPLOT/S [SWXH CRFILE GKIDS GSINFO GTYPE IPANDEC OCHN RDBLK RSTDR VARDEF, DEXTER DECK DEXTR GETAREA FHOUR HRDIF ASCDD HPLOT RADJST RDKEY, HELICITY INFLOW, HGRAPH CHARS, UVCOMP VERTSPL MSHEAR HHQC, CAP ADL CONV COPYDB DISGRAPH WPPROD]/V HHPLOT AWRITE GPREP GFMT HHREV UVT WMOV BG.LB XMEM.LB UTIL.LB TOP.LB FORT.LB

PROGRAM INSTALLATION

1. Move HHPLOT.SV and HHPLOT.OL to an applications directory. Create links from the master directory to HHPLOT.SV, HHPLOT.OL, and HHPLOT.AP.

2. Verify that the background has been allocated at least to 128K. The RDOS command 'GMEM' will reveal this information, and the command 'SMEM 128' will set the grounds.

3. Verify that WPDATA, WP.CF, WPCF.nn, and WPSTAT are linked to, or located in the same directory from which HHPLOT is executed.

DISPLAY PLAN VIEWS OF HORIZONTAL WIND VECTORS

PART B: PROGRAM EXECUTION and ERROR CONDITIONS

PROGRAM NAME: HHPLOT AAL ID: GPH031
Revision No.: 01.00

PROGRAM EXECUTION:

1. HHPLOT runs only in the command line mode. At the ADM, enter:

   RUN:HHPLOT/Q hh/H sss/S ddd/D ff/F aaa/A yyy/Y zz/Z

   Definition of switches:

   GLOBAL

   /Q - Skip processing (quit) if number of newly decoded input data versions is zero.

   Defaults:

   Defaults are initiated whenever a switch is omitted.

   /Q - Do not skip processing, even if the decoder has not decoded new data.

   LOCAL

   hh/H - Hour to plot for this run. Any hour (zero to 23) within 24 hours prior to the last decoded hour may be requested.
   sss/S - Specifies the stations to be plotted. Up to three sets of stations and switches may be specified.
   ddd/D - Storm motion direction in degrees. Different storm motion directions may be used for each of the three stations.
   ff/F - Storm motion speed in knots. Different storm motion speeds may be used for each of the three stations.
   aaa/A - Routing address for RDC or SDC.
   yyy/Y - Surface wind direction in degrees. Different wind directions may be used for each of the three stations.
   zz/Z - Surface wind speed in knots. Different wind speeds may be used for each of the three stations.

   Defaults:

   Defaults are initiated whenever a switch is omitted.

   /H - Plot the last decoded hour.
   /S - Plot all the stations stored in the decoded file.
   /D - Storm motion direction is 30° to the right of the mean wind in the 0 to 6 km layer.
   /F - Storm motion speed is 75% of the mean wind in the 0 to 6 km layer.
   /A - None.

/Y - Surface wind direction is obtained from the PSOS instrumentation, if available, or from Ekman spiral calculations, based on the 1000-m level.

/Z - Surface wind speed is obtained from the PSOS instrumentation, if available, or from Ekman spiral calculations, based on the 1000-m level.

ERROR CONDITIONS

DASHER MESSAGES	MEANING
1. "GETTING CHANNEL - 'file'"	Couldn't obtain I/O channel to 'file'. Probable system or disk problem.
2. "OPENING 'file'"	Couldn't open 'file'. Program not linked to, or located in same directory as 'file'. Establish appropriate links.
3. "OVOPN ERROR"	Problem with the overlay file. Determine that the overlay file resides in the applications directory and that there is a link to it. If problem recurs, reload the save and overlay files from the starter diskette and rerun the program. If the problem persists, call maintenance programmer.
4. "MAPDF ERROR"	Program could not set up the window for extended memory use. Reload save and overlay files from starter diskette and rerun. If problem persists, call maintenance programmer.
5. "NOT ENOUGH EXTENDED MEMORY AVAILABLE"	There is not enough extended memory available for HHPLOT to execute. Set background to 128K.
6. "CREATING 'file'"	Couldn't create 'file'. Determine if 'file' exists. If so, delete it and rerun program. If problem persists, call maintenance programmer.
7. "READING 'file'"	Couldn't read 'file'. Delete 'file'. You may need to reload 'file' from starter diskette or recreate it.

DASHER MESSAGES	MEANING
8. "UTF ERROR - NMCGPHxxx"	This message results from either of two problems. The problem may be that there is no key in the database for NMCGPHxxx. Add NMCGPHxxx to the wish list of the database, and rerun program. The other possibility is that the area reserved for holding graphic instructions was exceeded by the current graphics plot. Call maintenance programmer.
9. "SPACE PROBLEMS"	The area reserved for holding graphics instructions was exceeded by current graphics plot. Call maintenance programmer.
10. "WRITING AP FILE" 11. "ADL WRITE"	Couldn't write to the HHPLOT.AP file. Verify that HHPLOT.AP is linked to the applications directory. Delete HHPLOT.AP from the applications directory, and rerun program.
12. "CAN'T FIND TYPE"	Couldn't find the type of record (TS, CS, PV, or HH) in WPCF.nn. Reedit preformat, and run CWPCF. If problem persists, call maintenance programmer.
13. "READING WPCF PVINFO"	Couldn't read WPCF.nn. Determine that you are reading the correct file (nn). You may need to run WPSET to change the file extension. If not, delete WPCF.nn, reedit preformat, and run CWPCF.
14. "KEY NOT FOUND"	The type of products used by HHPLOT was not found in WPCF.nn. Reedit the preformat and rerun CWPCF. If problem persists, call maintenance programmer.
15. "DEXTER ERROR IER= X"	HHPLOT couldn't map a block from extended memory into the window. Reload save and overlay files from starter diskette and rerun. If problem persists, call maintenance programmer. 'X' is the FORTRAN error return.

DASHER MESSAGES	MEANING
16. "MXRDB ERROR IPC,IER= X,Y" 17. "READING DATA FILE NC IPC, IER= X,Y"	Couldn't read the data file from disk to extended memory. Delete the data file. OEDIT WP.CF, set locations 1 through 4 to -1 (177777K), and rerun WPDEC. If problems persist, call maintenance programmer. Y is the actual FORTRAN error, and X is the number of RDOS blocks transferred to extended memory.

CONTOUR PROFILER DATA

PART A: PROGRAM INFORMATION and INSTALLATION PROCEDURES

PROGRAM NAME: WPCON

AAL ID: GPH031
Revision No.: 01.03

PURPOSE: Contour time section, cross section, and plan view wind profiler data.

PROGRAM INFORMATION:

Development Programmer:

Mark A. Leaphart

Location: Techniques Development Laboratory

Phone: 301-713-0056

Maintenance Programmers:

Gary F. Battel

Location: Techniques Development Laboratory

Phone: 301-713-0056

Language: FORTRAN IV/Rev 5.57
Macro Assembler/Rev 6.30

Type: Swapped

Save file creation dates: WPCON.SV

Original release/Rev 01.00	- January 12, 1990
First revision/Rev 01.01	- May 15, 1990
Second revision/Rev 01.02	- November 1, 1990
Third revision/Rev 01.03	- April 18, 1991

Running time: 18 sec per product. See also the swapping programs (TSCON, TSKIN, CSCON, and PVCON).

Disk space:	Program files	- 58 RDOS blocks
	Data files	- 34 RDOS blocks (5 products)

PROGRAM REQUIREMENTS

Program files:

NAME
WPCON.SV

Data files:

NAME	Disk location	READ/WRITE	COMMENTS
WPCD	User directory	R	Holds the profiler data to be contoured.
TCPLOTnn	Master directory	W	The created Internal Plot Files (IPF). The nn is a numerical indicator for each IPF.
TKPLOTnn	Master directory	W	
CCPLOTnn	Master directory	W	
PCPLOTnn	Master directory	W	

LOAD LINE

```
RLDR WPCON ADJINT ASCDD BCONVRT BINIT BMOVE BPLOT CRDDHH CSTAT GTDAY
     INITAR LLAB MANM MBITS NOCON OCHN PUNIT RCFILE SCALE SEARCH SLARG
     TROUBL WMOV WPCREV UGG.LB UTIL.LB TOP.LB FORT.LB AFOSE.LB
```

PROGRAM INSTALLATION

1. Move WPCON.SV to an applications directory. Create a link in the master directory to WPCON.SV.

2. Verify that WPCD is linked to the applications directory.

CONTOUR PROFILER DATA

PART B: PROGRAM EXECUTION and ERROR CONDITIONS

PROGRAM NAME: WPCON

AAL ID: GPH031
Revision No.: 01.03

PROGRAM EXECUTION

Program cannot be executed as a stand alone program. Every contouring program (TSCON, TSKIN, CSCON, and PVCON) swaps to this program.

ERROR CONDITIONS

DASHER MESSAGES	MEANING
1. "GETTING CHANNEL - WPCD"	Couldn't get I/O channel for WPCD. Probable system or disk problem.
2. "OPENING WPCD"	Couldn't open WPCD. Program not linked to or located in same directory as WPCD. Establish appropriate links.
3. "READING WPCD"	Couldn't read the contour file. Delete WPCD and rerun applications program. If problem recurs, reload applications program from starter diskette and rerun. If problem persists, contact maintenance programmer.
4. "FATAL RUNTIME ERROR 32 AT LOC. xxxxxx CALLED FROM LOC. yyyyyy"	Master directory ran out of disk space. Delete any unnecessary files from SYSZ and rerun applications program.
5. "WPCON IS NOT A STAND ALONE PROGRAM. WPCON MUST BE SWAPPED TO"	This message is caused by one of two possible errors. Trying to run this program as a stand alone program will generate this message. This message will also appear when an incorrect message is passed to WPCON by the applications program. Reload applications program from starter diskette and rerun. If problem persists, call maintenance programmer.

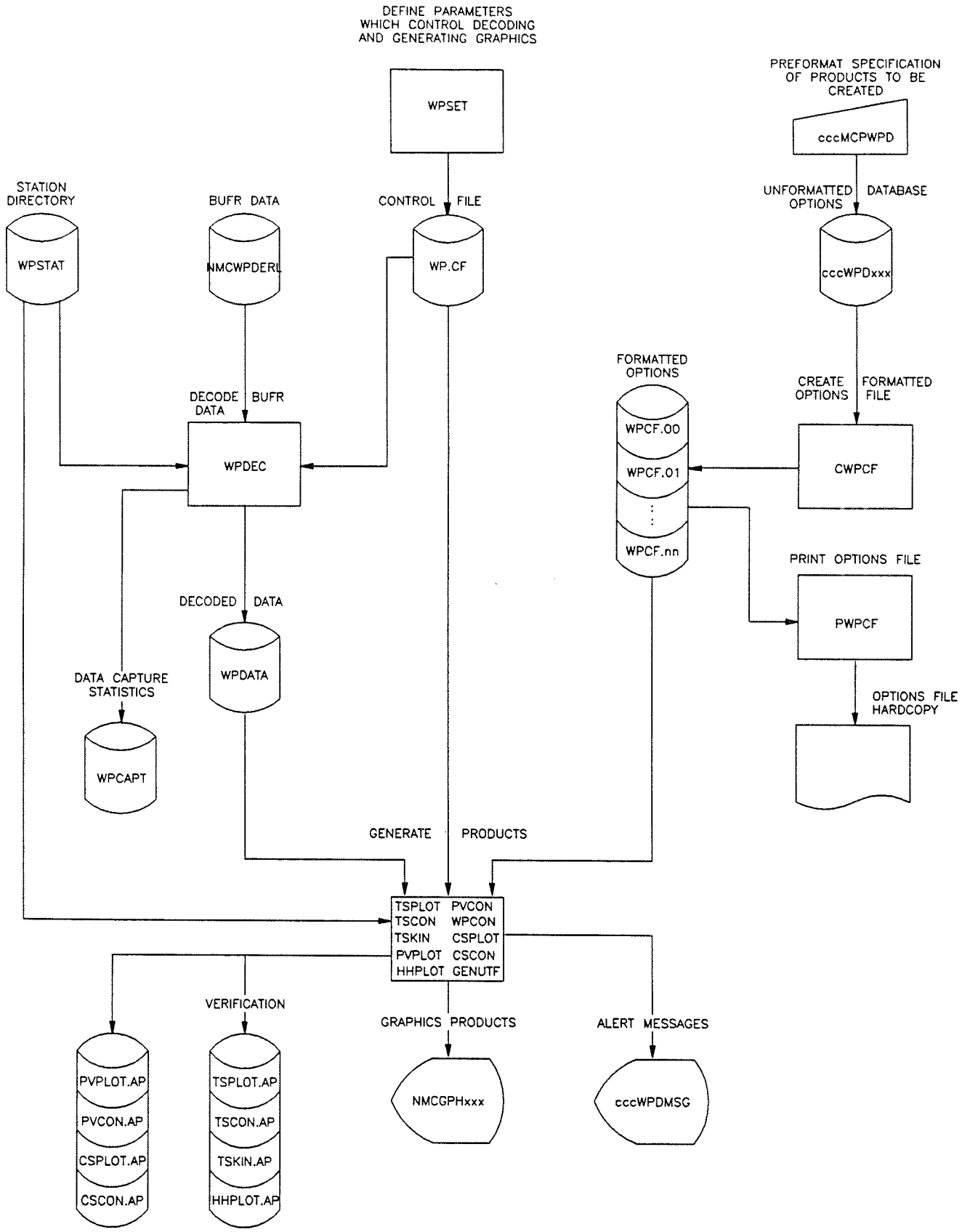

Figure 1. Height coverage, atmospheric sampling heights, and height resolution of the network wind profilers.

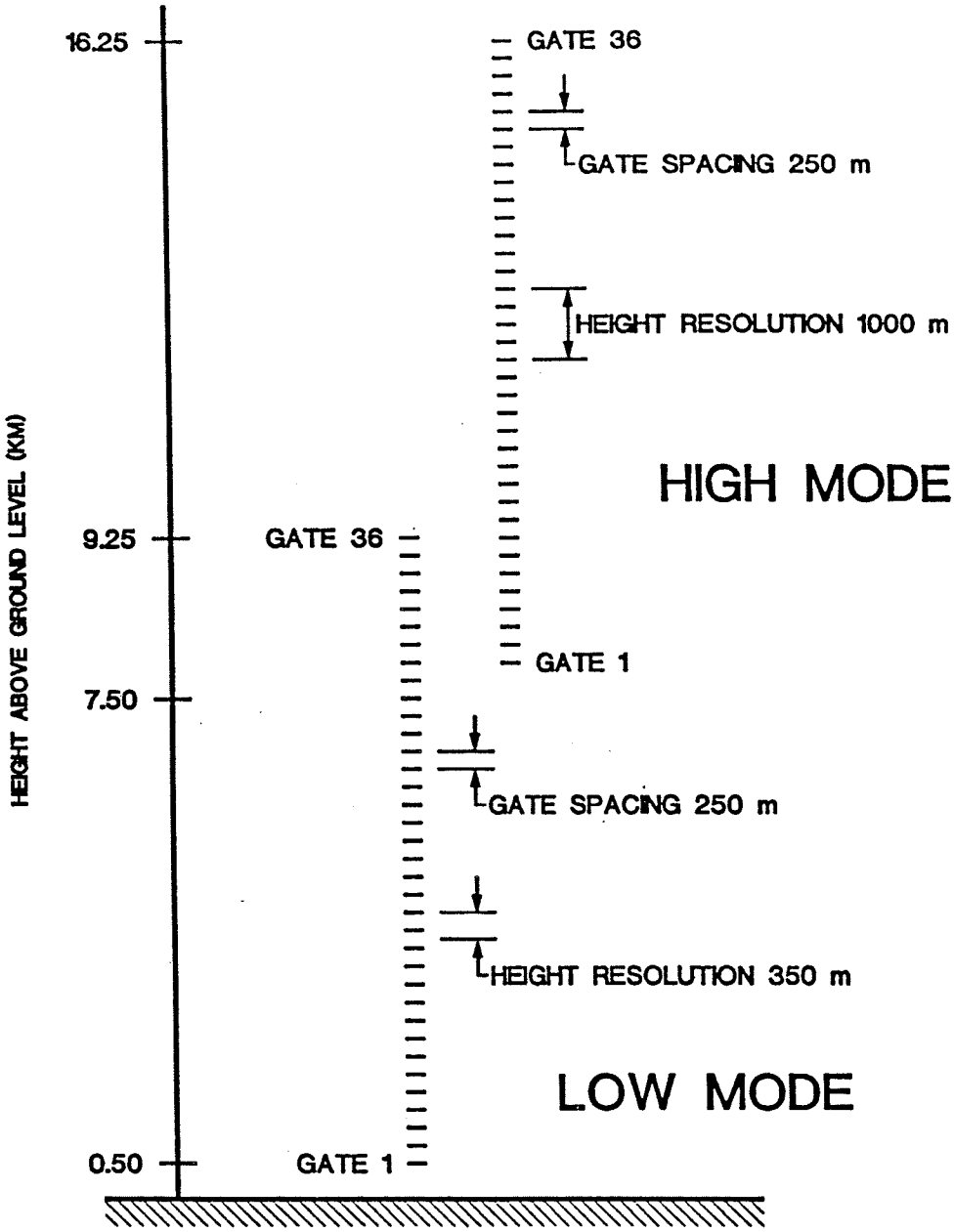

Figure 2. Program flow for the wind profiler software.

```
TSPLOT/Q
TSCON/Q
TCMAC
TSKIN/Q
TKMAC
CSPLOT/Q
CSCON/Q
CCMAC
PVPLOT/Q
PVCON/Q
PCMAC
HHPLOT/Q
```

Figure 3. Runtime macro (WPMAC.MC) for wind profiler software execution.

```
GENUTF TCPLOT00 NMCGPHZI0;DELETE TCPLOT00
GENUTF TCPLOT01 NMCGPHZJ0;DELETE TCPLOT01
GENUTF TCPLOT02 NMCGPHZY0;DELETE TCPLOT02

GENUTF TKPLOT00 NMCGPHYD1;DELETE TKPLOT00
GENUTF TKPLOT01 NMCGPHYV1;DELETE TKPLOT01
GENUTF TKPLOT02 NMCGPHYR1;DELETE TKPLOT02

GENUTF CCPLOT00 NMCGPHXN0;DELETE CCPLOT00
GENUTF CCPLOT01 NMCGPHXM0;DELETE CCPLOT01
GENUTF CCPLOT02 NMCGPHXW0;DELETE CCPLOT02
GENUTF CCPLOT03 NMCGPHXZ0;DELETE CCPLOT03

GENUTF PVCON5A NMCGPH5MA;DELETE PVCON5A
GENUTF PVCON7A NMCGPH7MY;DELETE PVCON7A
```

Figure 4. Sample of runtime macros which generate graphics products from Internal Plot Files created during execution of contour programs TSCON, TSKIN, CSCON, and PVCON.

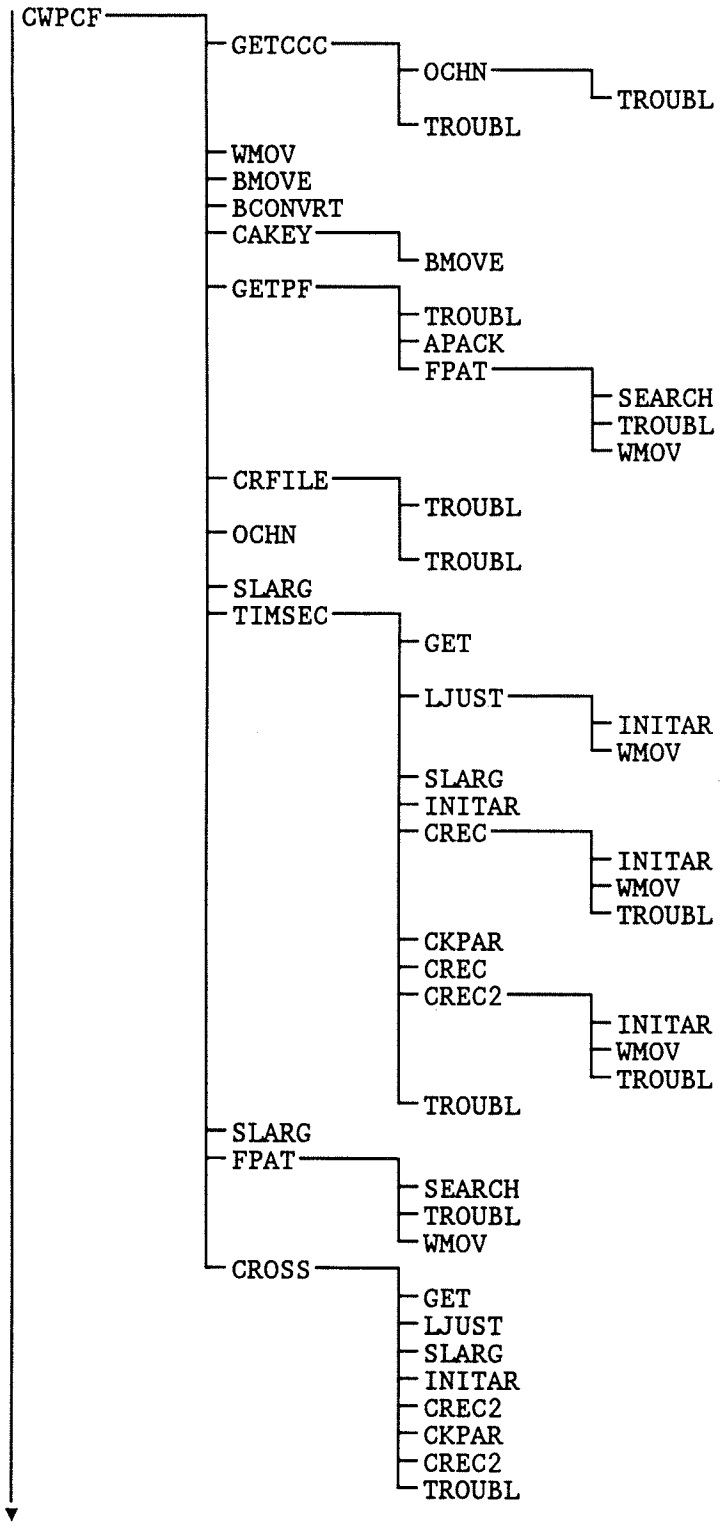

Figure 5. Structure flow diagram for program CWPCF.

```
▼
| CWPCF ──────┐
| (cont.)     ├─ SLARG
|             ├─ FPAT ──────┐
|             |             ├─ SEARCH
|             |             ├─ TROUBL
|             |             └─ WMOV
|             ├─ PLANV ─────┐
|             |             ├─ GET
|             |             ├─ LJUST
|             |             ├─ CREC
|             |             ├─ CKPAR
|             |             ├─ CREC
|             |             ├─ SLARG
|             |             ├─ CREC
|             |             └─ TROUBL
|             ├─ SLARG
|             └─ TROUBL
▼
(end of module CWPCF)
```

Figure 5. Structure flow diagram for program CWPCF (cont.)

```
PWPCF ──────┐
            ├─ BMOVE
            ├─ BCONVRT
            ├─ OCHN ──────┐
            |             └─ TROUBL
            ├─ SLARG
            └─ BMOVE
```

Figure 6. Structure flow diagram for program PWPCF.

```
WPSET ──┬─ INITAR
        ├─ TROUBL
        ├─ WMOV
        ├─ GETCCC ──┬─ OCHN ──┬─ TROUBL
        │           │         │
        │           └─ TROUBL
        ├─ WMOV
        ├─ BMOVE
        ├─ TROUBL
        ├─ CEXT
        ├─ CHRST
        ├─ ADDST ──┬─ BMOVE
        ├─ DELST ──┬─ SEARCH
        │          ├─ BMOVE
        │          └─ BINIT
        ├─ CHAFN ──┬─ SEARCH
        │          ├─ INITAR
        │          └─ BMOVE
        ├─ CHDAN ──┬─ SEARCH
        │          ├─ INITAR
        │          └─ BMOVE
        ├─ INITAR
        ├─ WMOV
        └─ TROUBL
```

Figure 7. Structure flow diagram for program WPSET.

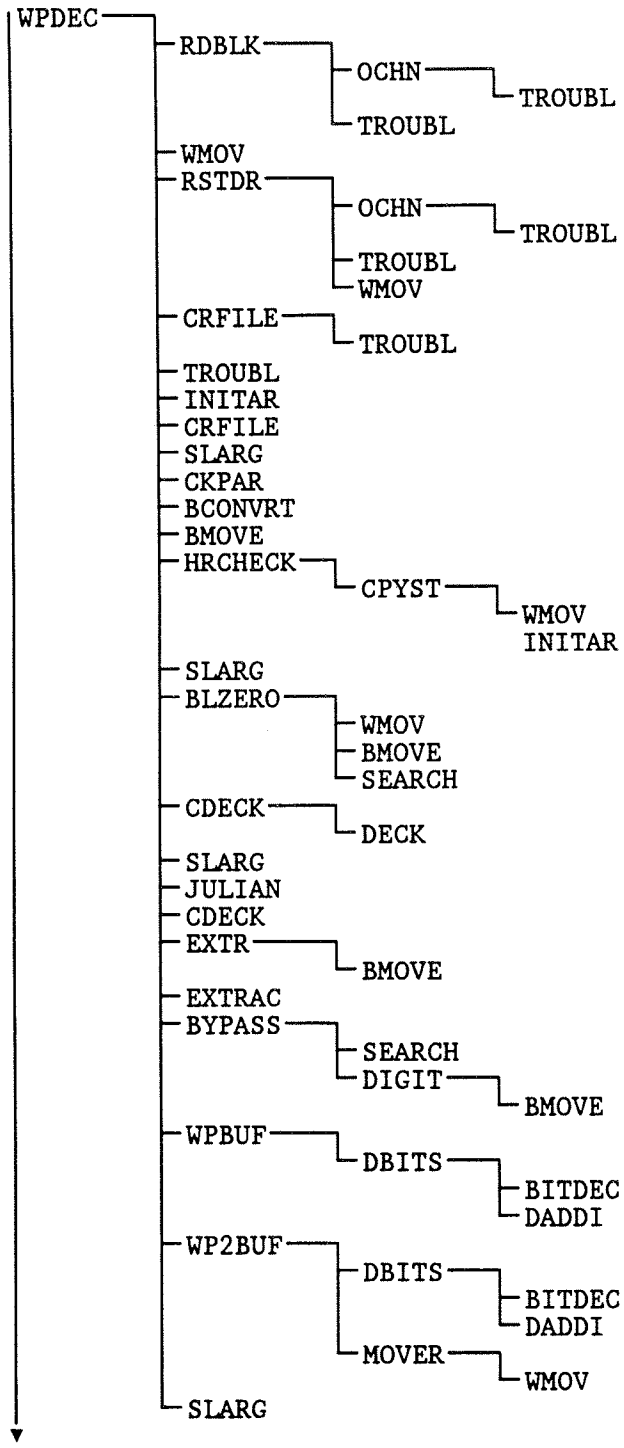

Figure 8. Structure flow diagram for program WPDEC.

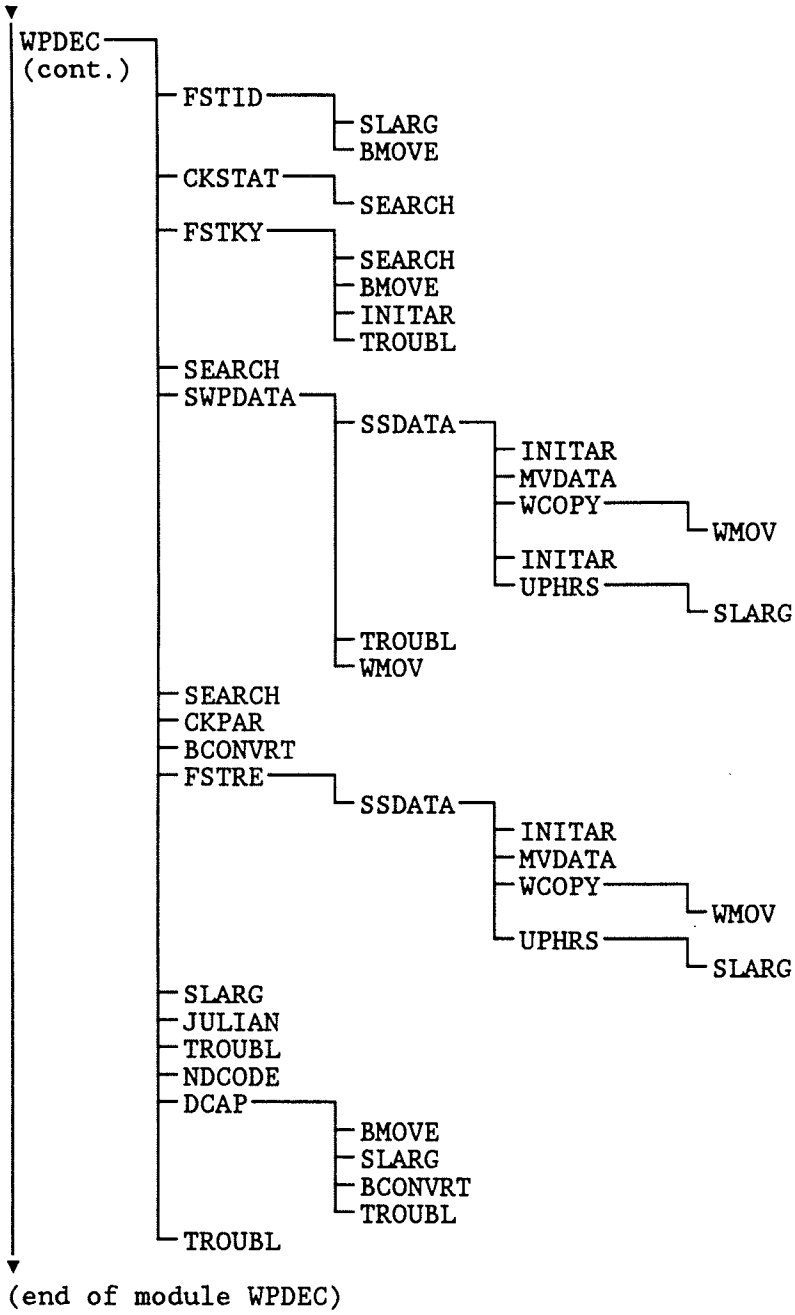

Figure 8. Structure flow diagram for program WPDEC (cont.)

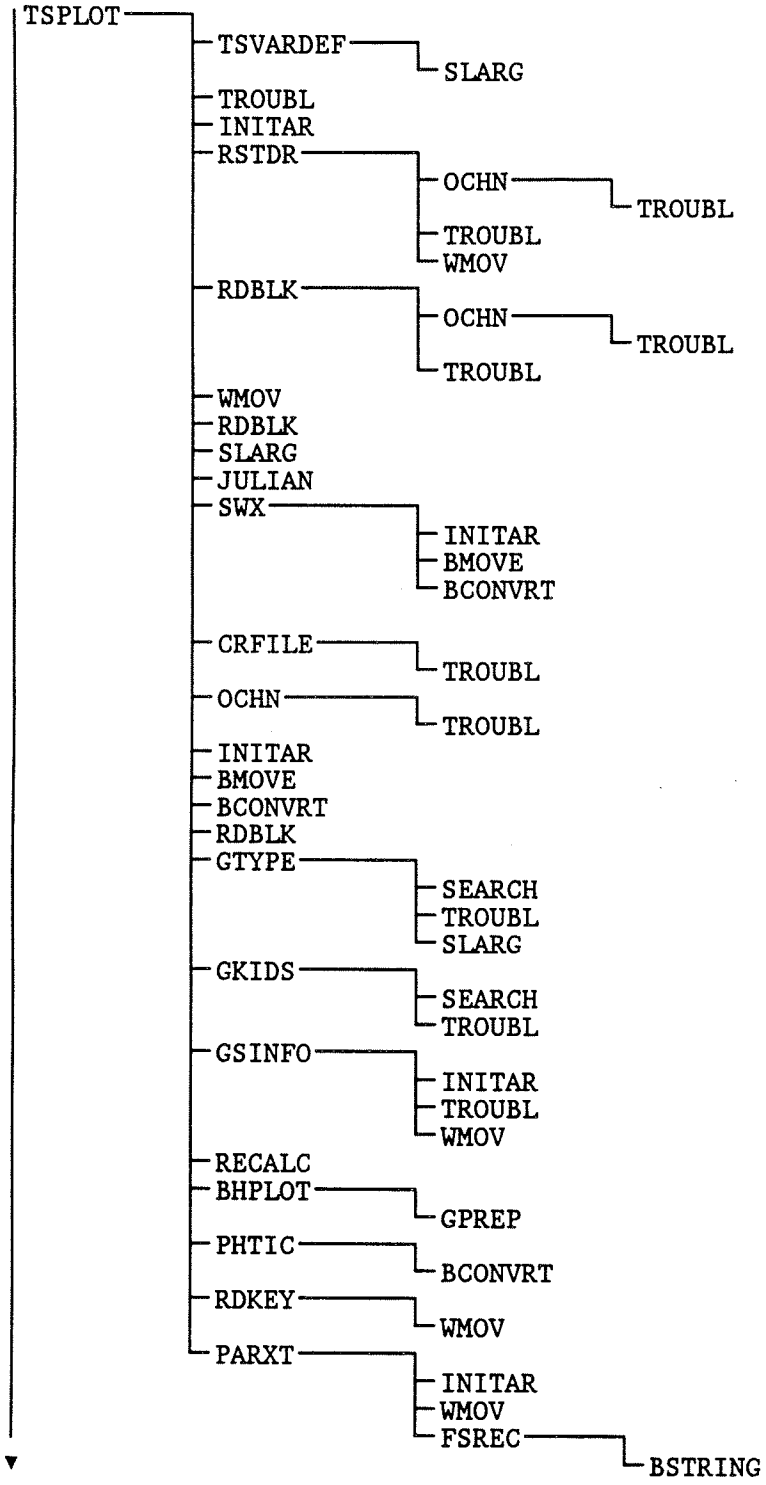

Figure 9. Structure flow diagram for program TSPLOT.

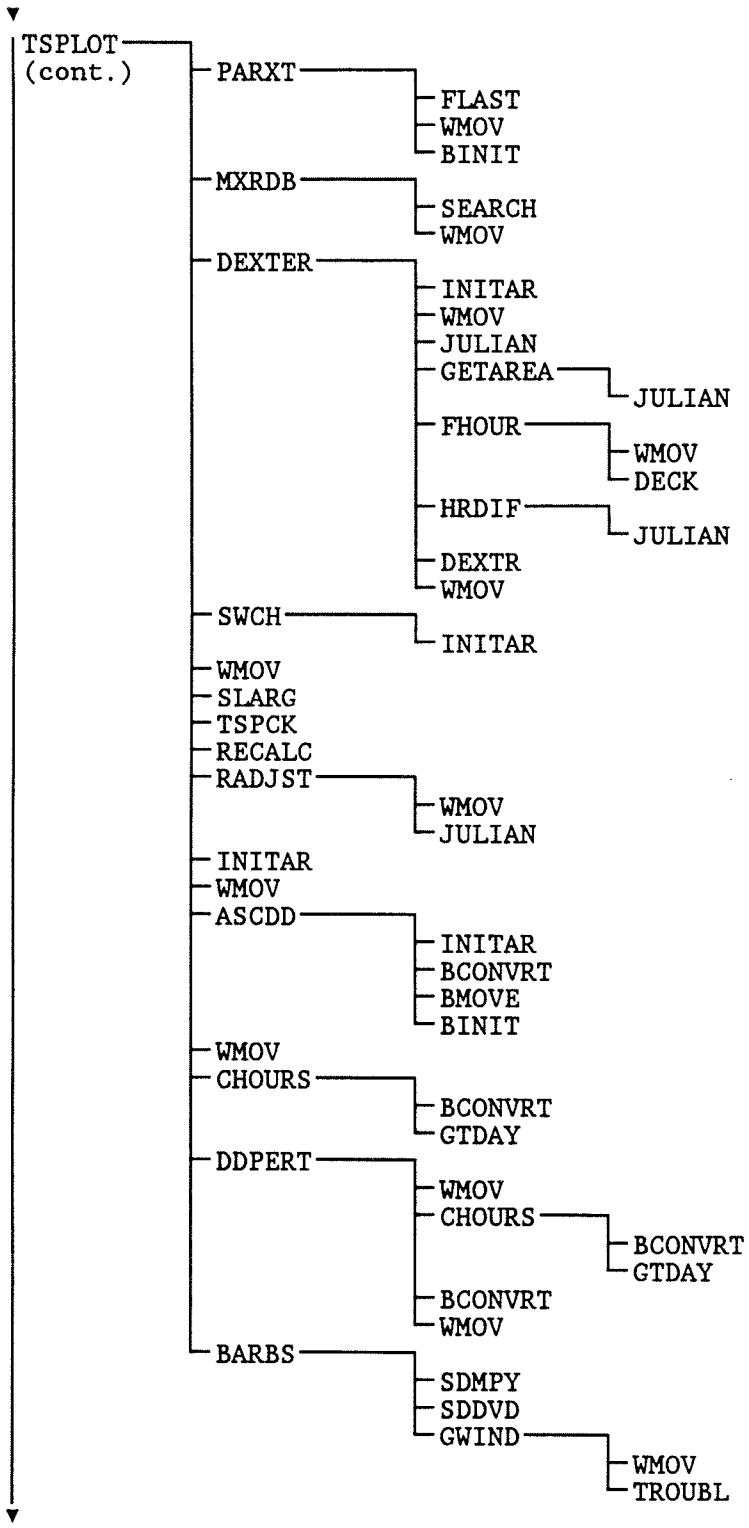

Figure 9. Structure flow diagram for program TSPLOT (cont.)

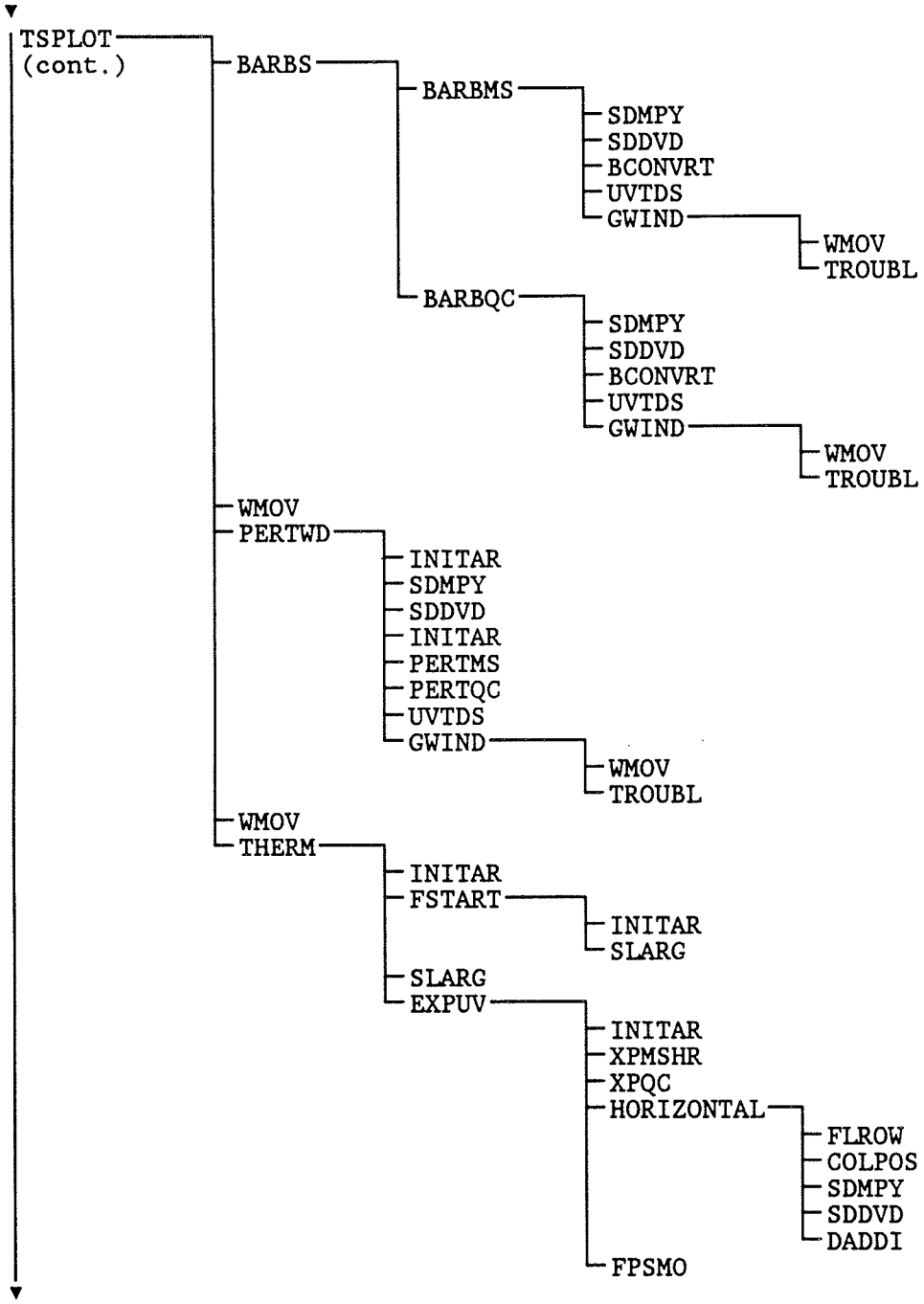

Figure 9. Structure flow diagram for program TSPLOT (cont.)

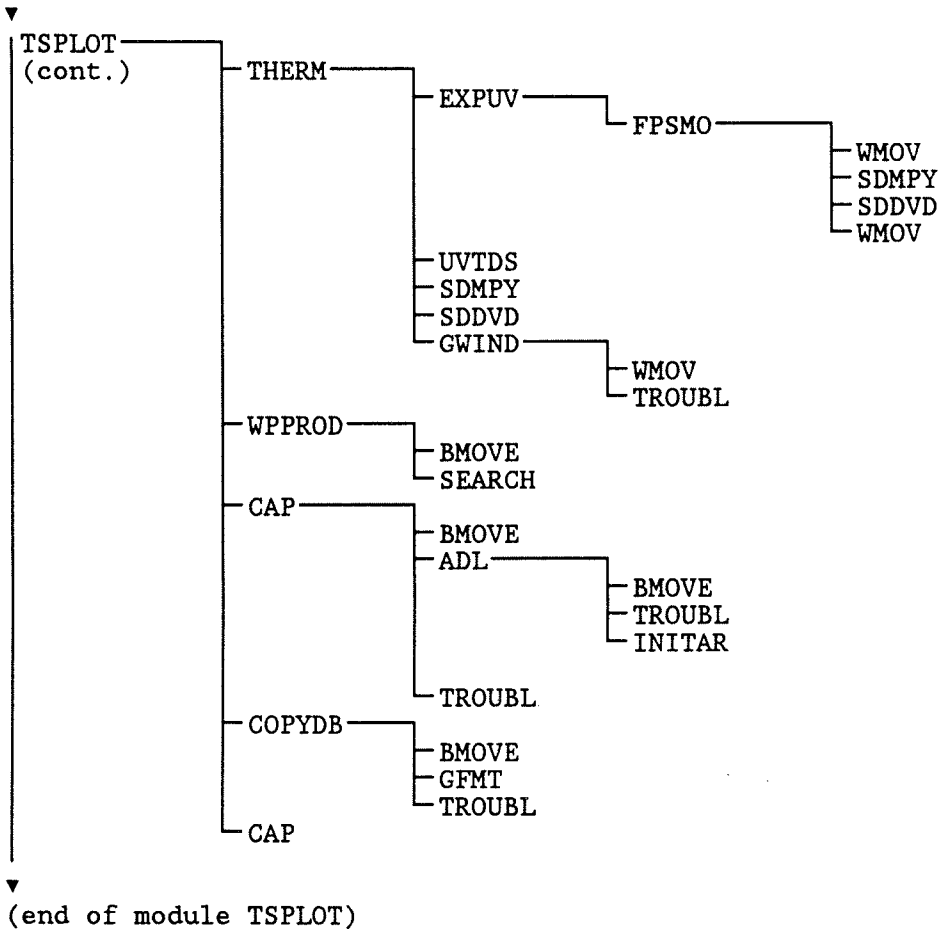

Figure 9. Structure flow diagram for program TSPLOT (cont.)

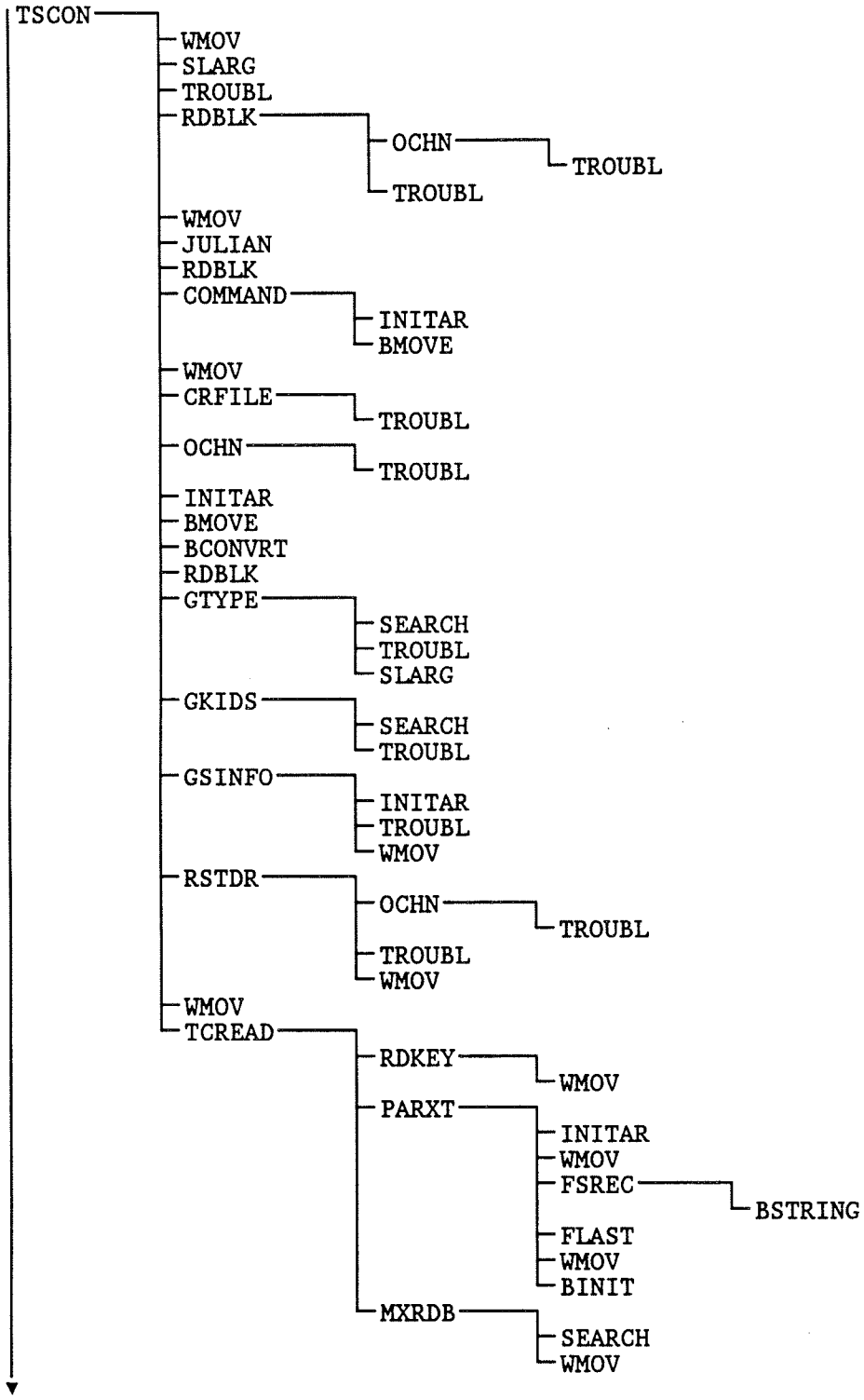

Figure 10. Structure flow diagram for program TSCON.

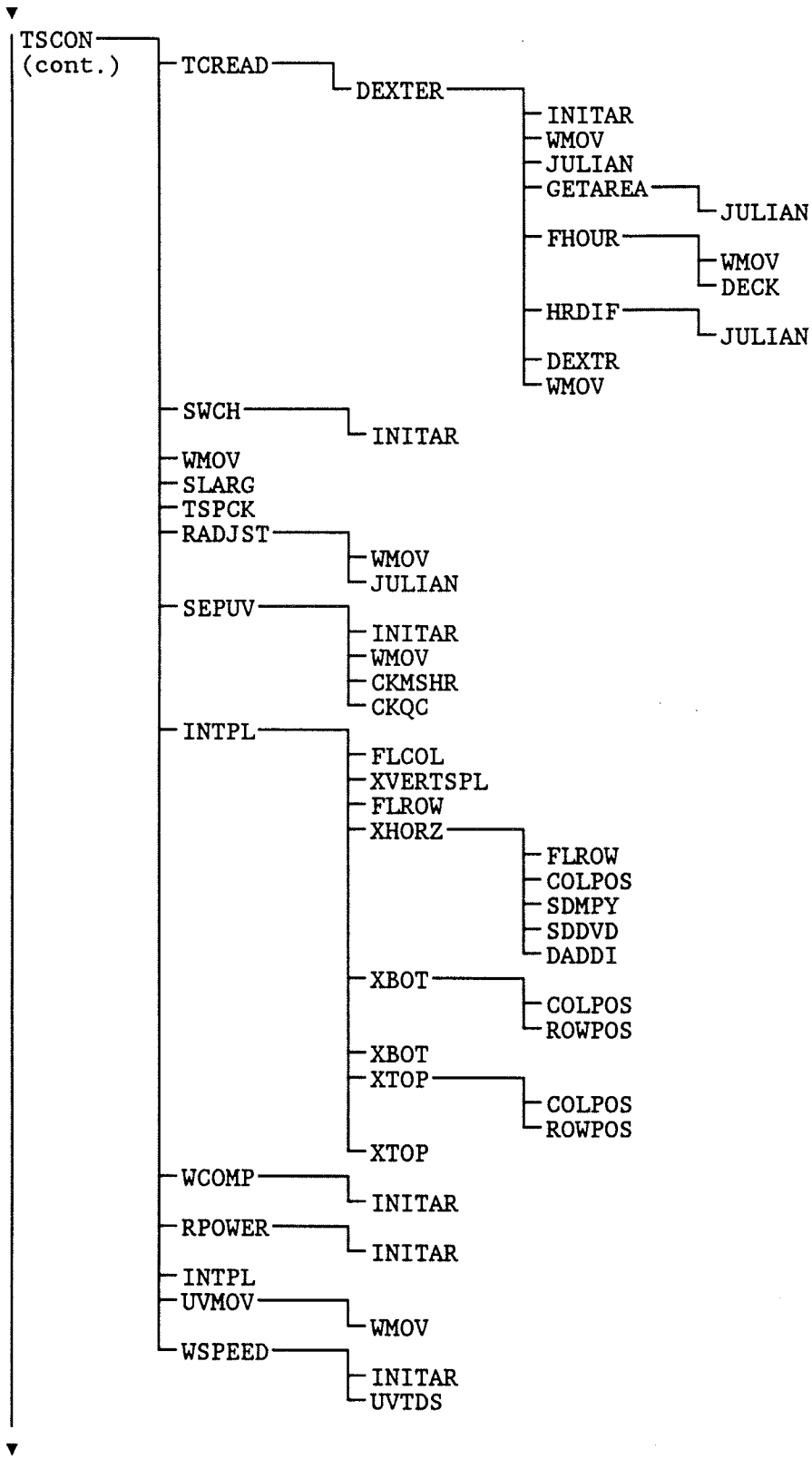

Figure 10. Structure flow diagram for program TSCON (cont.)

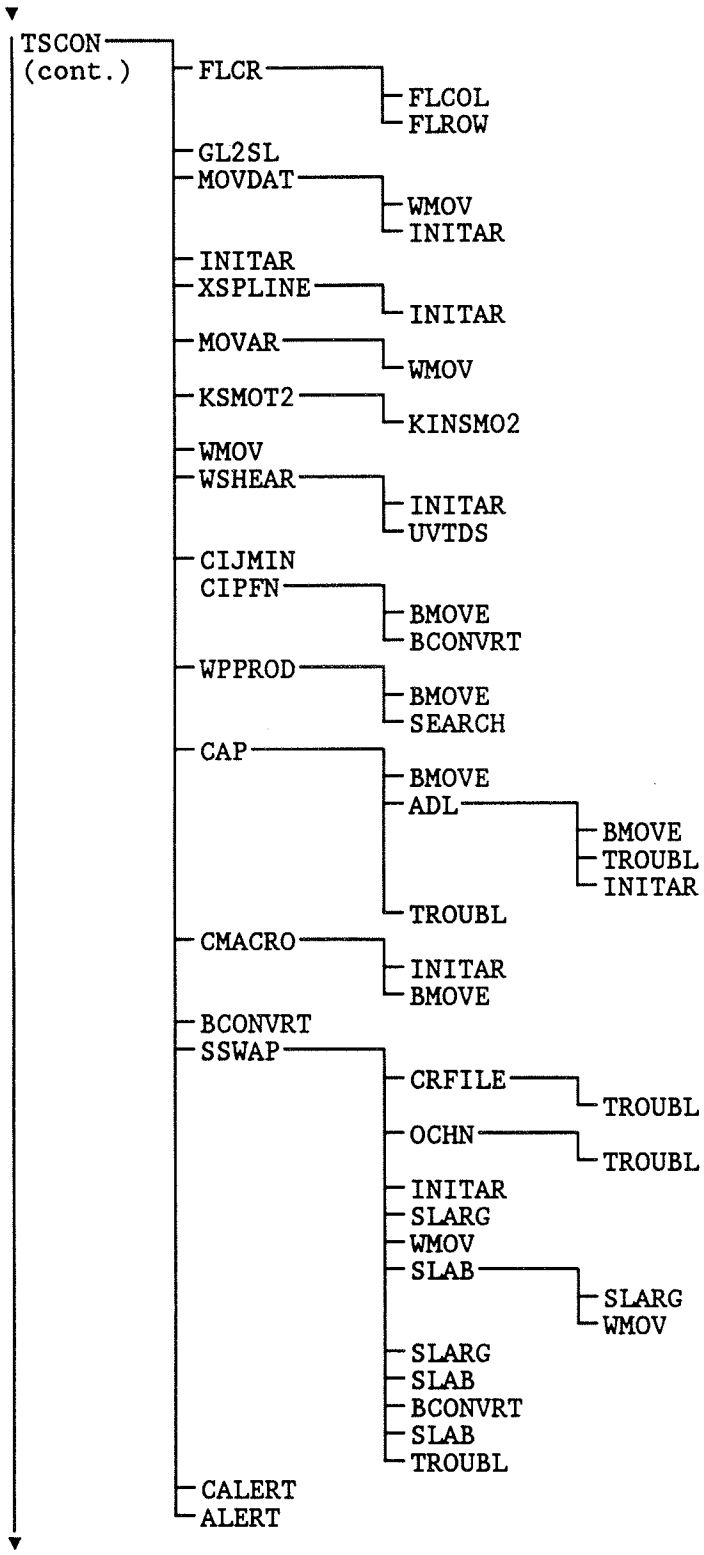

Figure 10. Structure flow diagram for program TSCON (cont.)

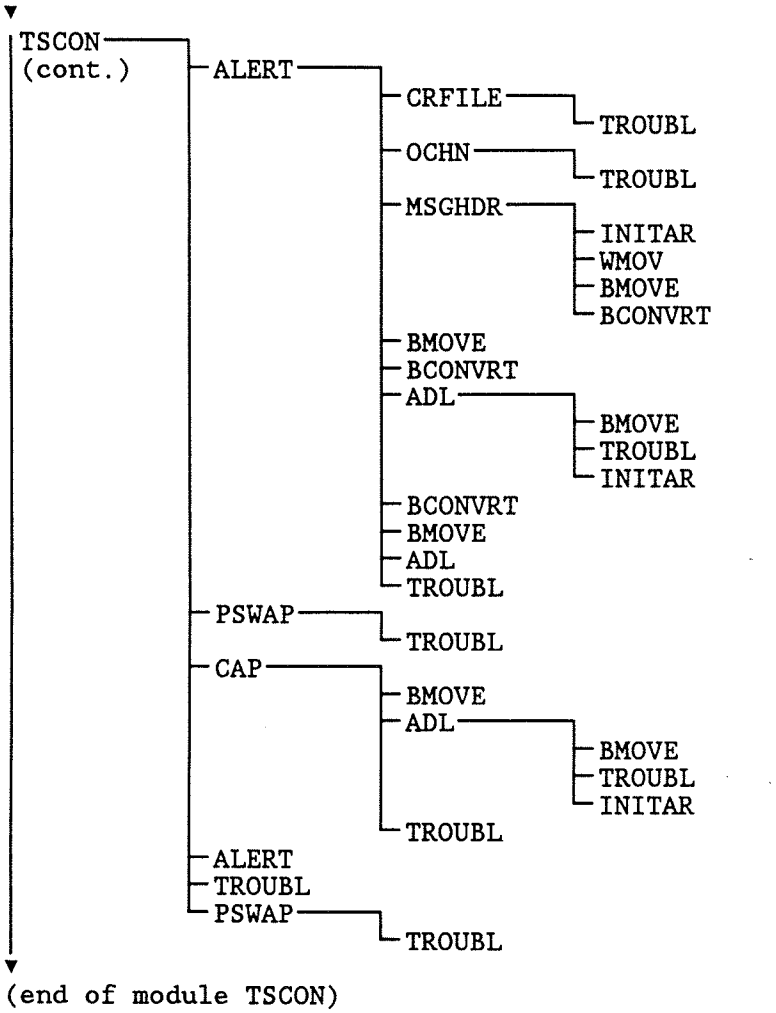

Figure 10. Structure flow diagram for program TSCON (cont.)

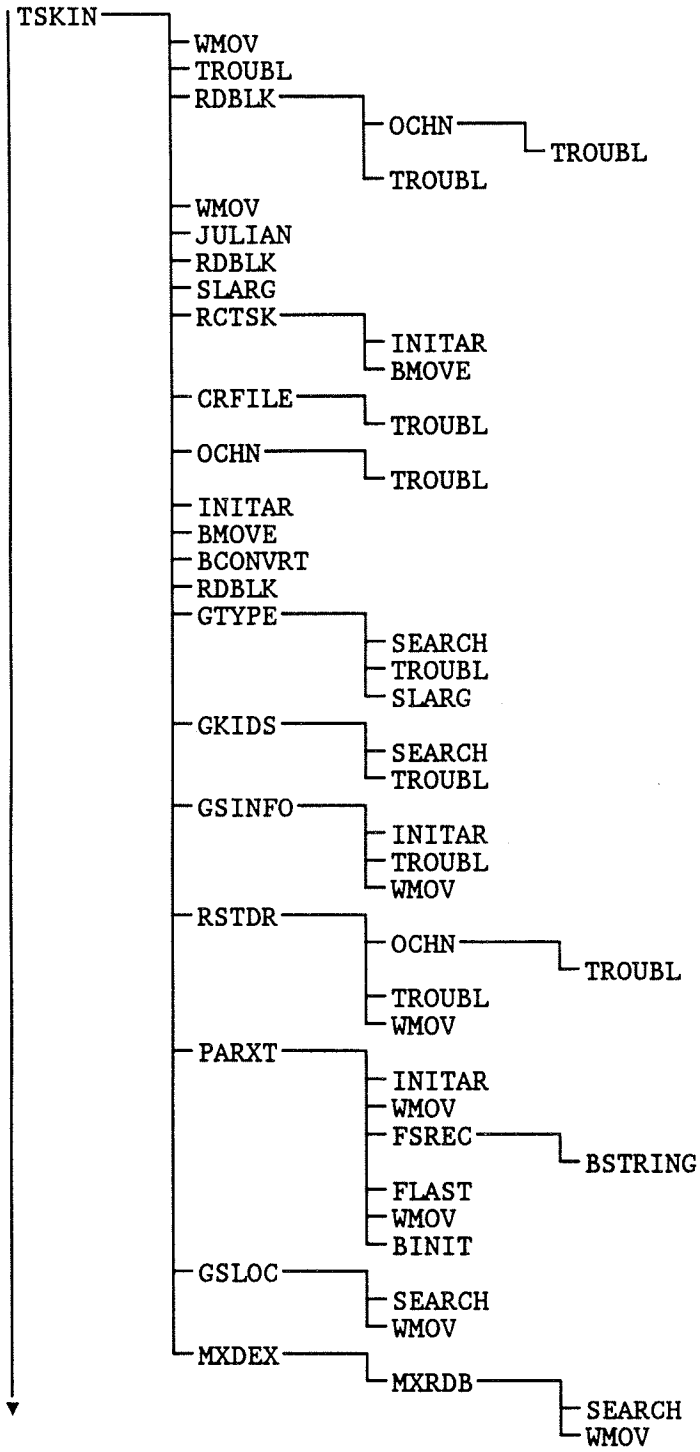

Figure 11. Structure flow diagram for program TSKIN.

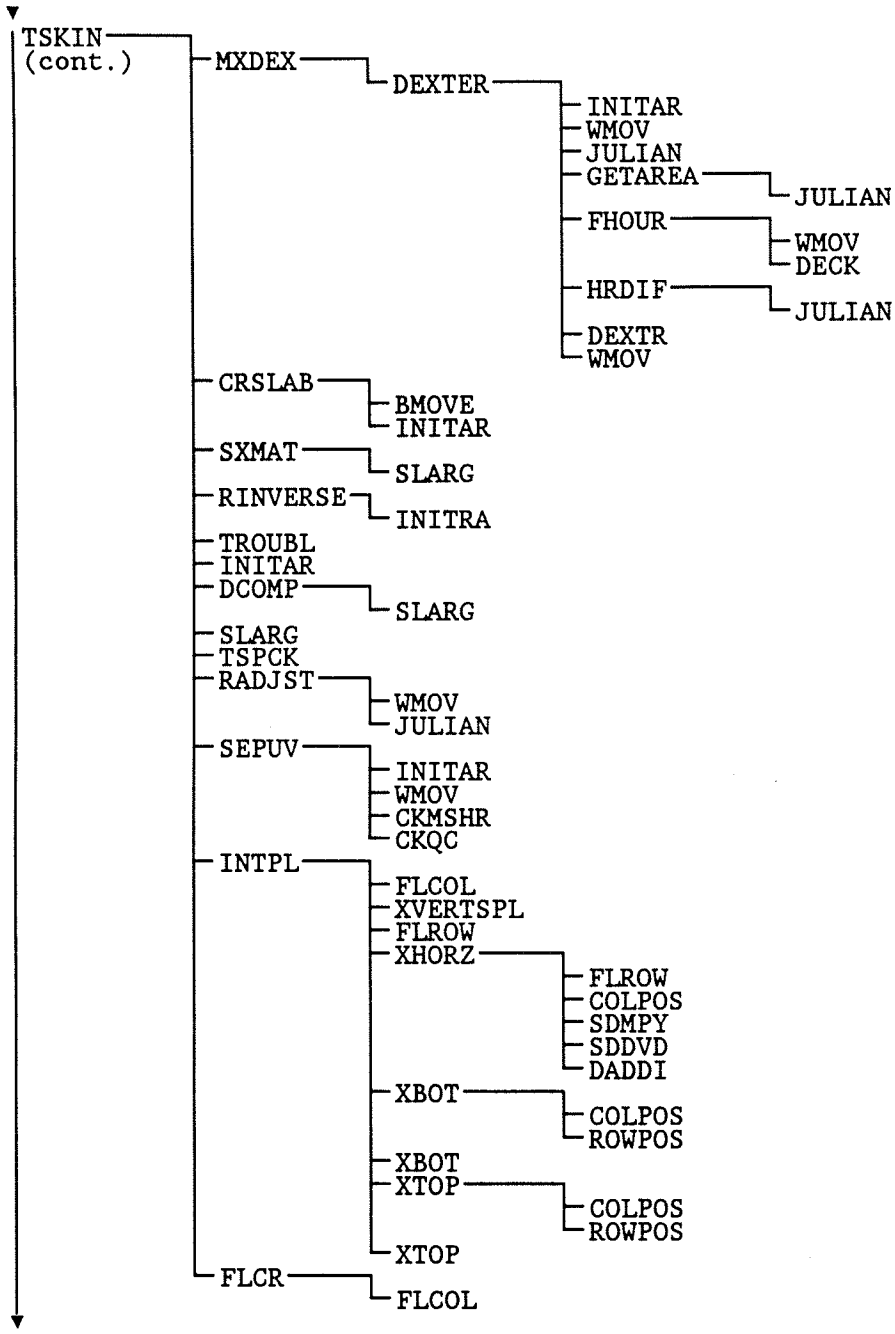

Figure 11. Structure flow diagram for program TSKIN (cont.)

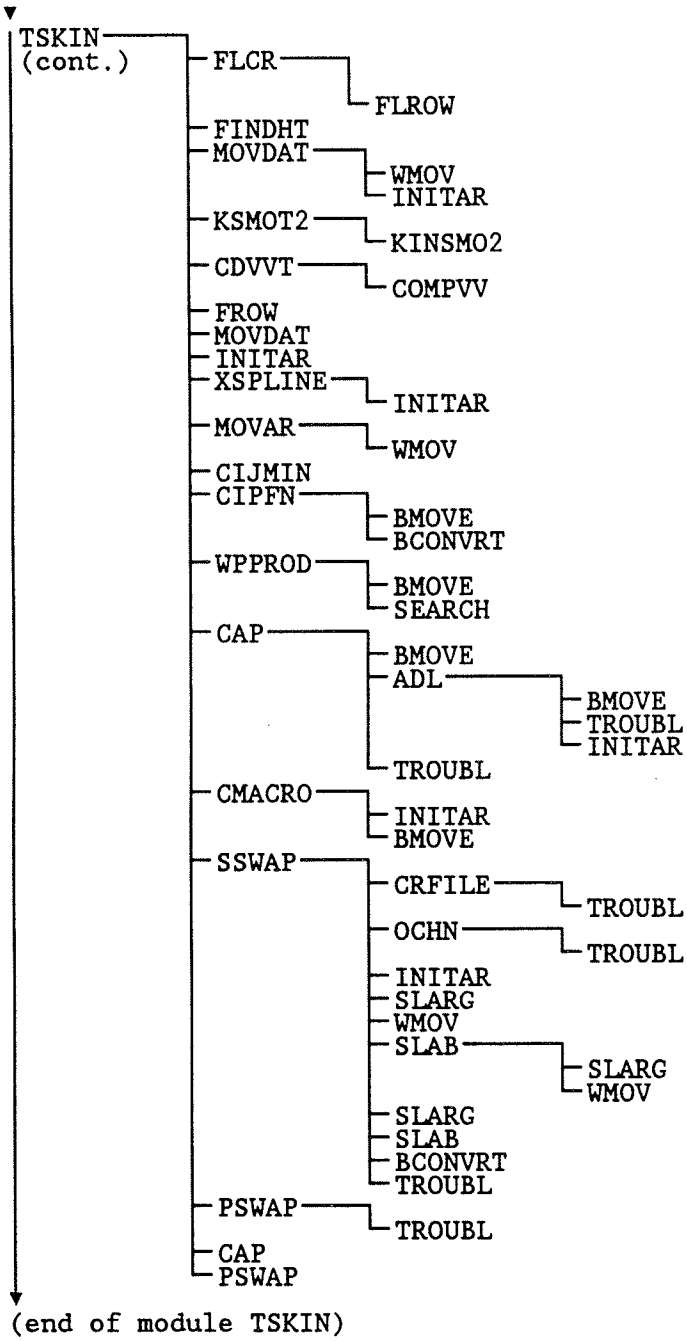

Figure 11. Structure flow diagram for program TSKIN (cont.)

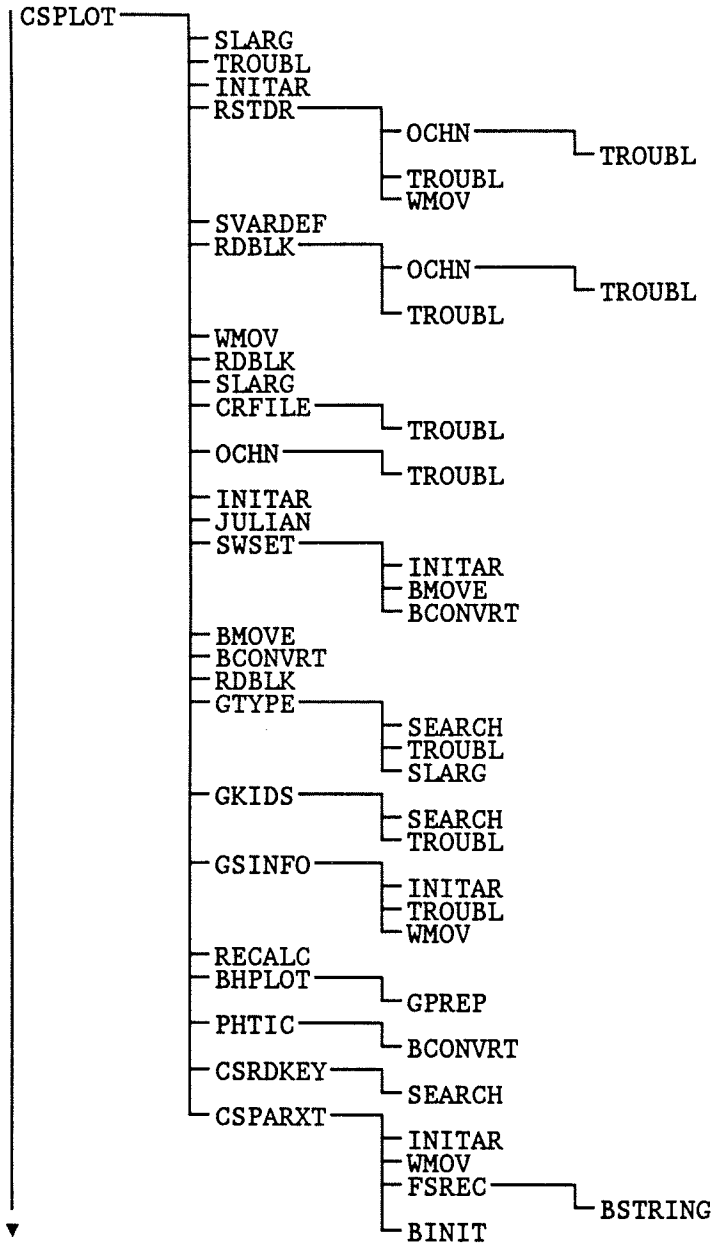

Figure 12. Structure flow diagram for program CSPLOT.

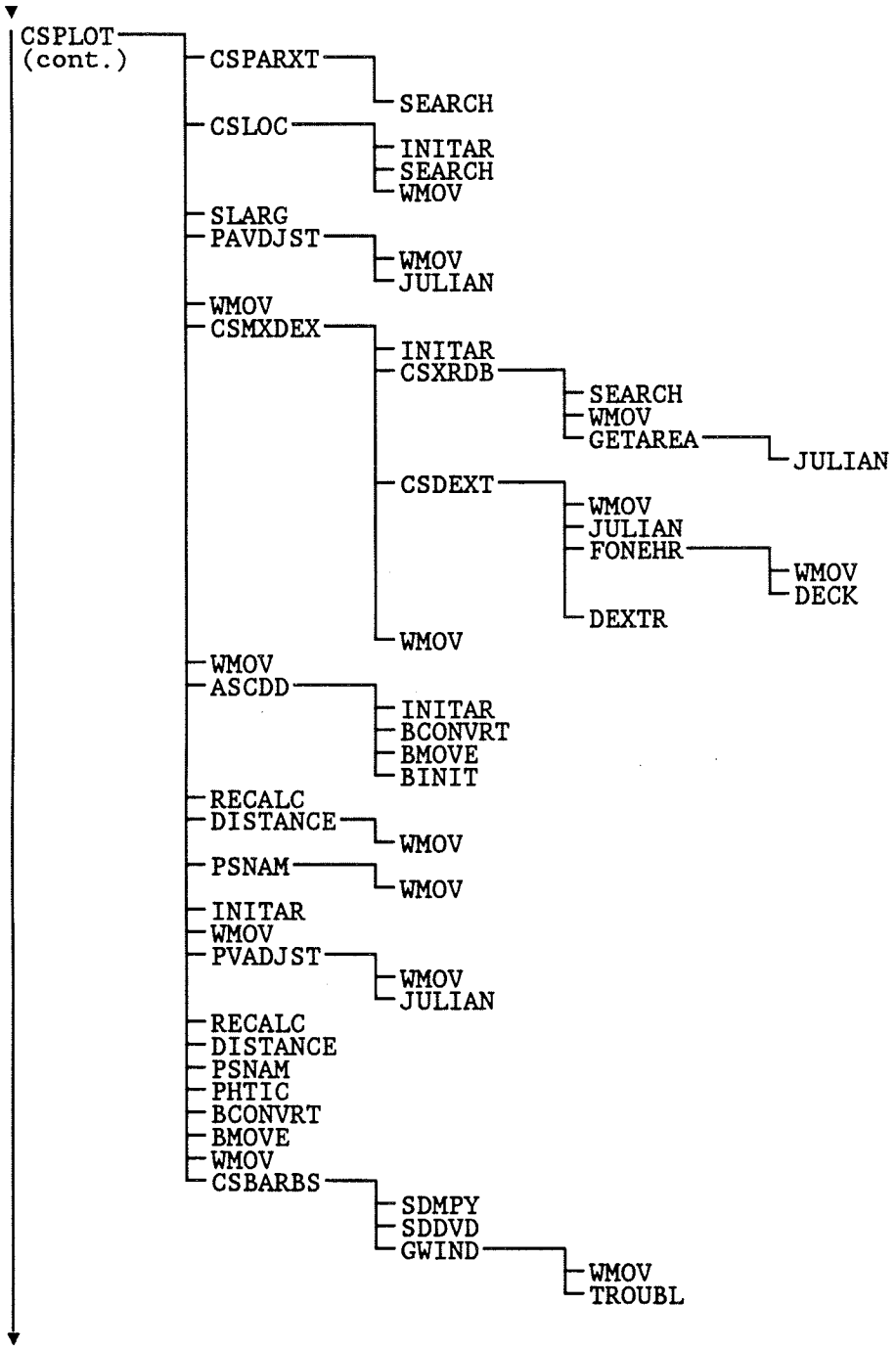

Figure 12. Structure flow diagram for program CSPLOT (cont.)

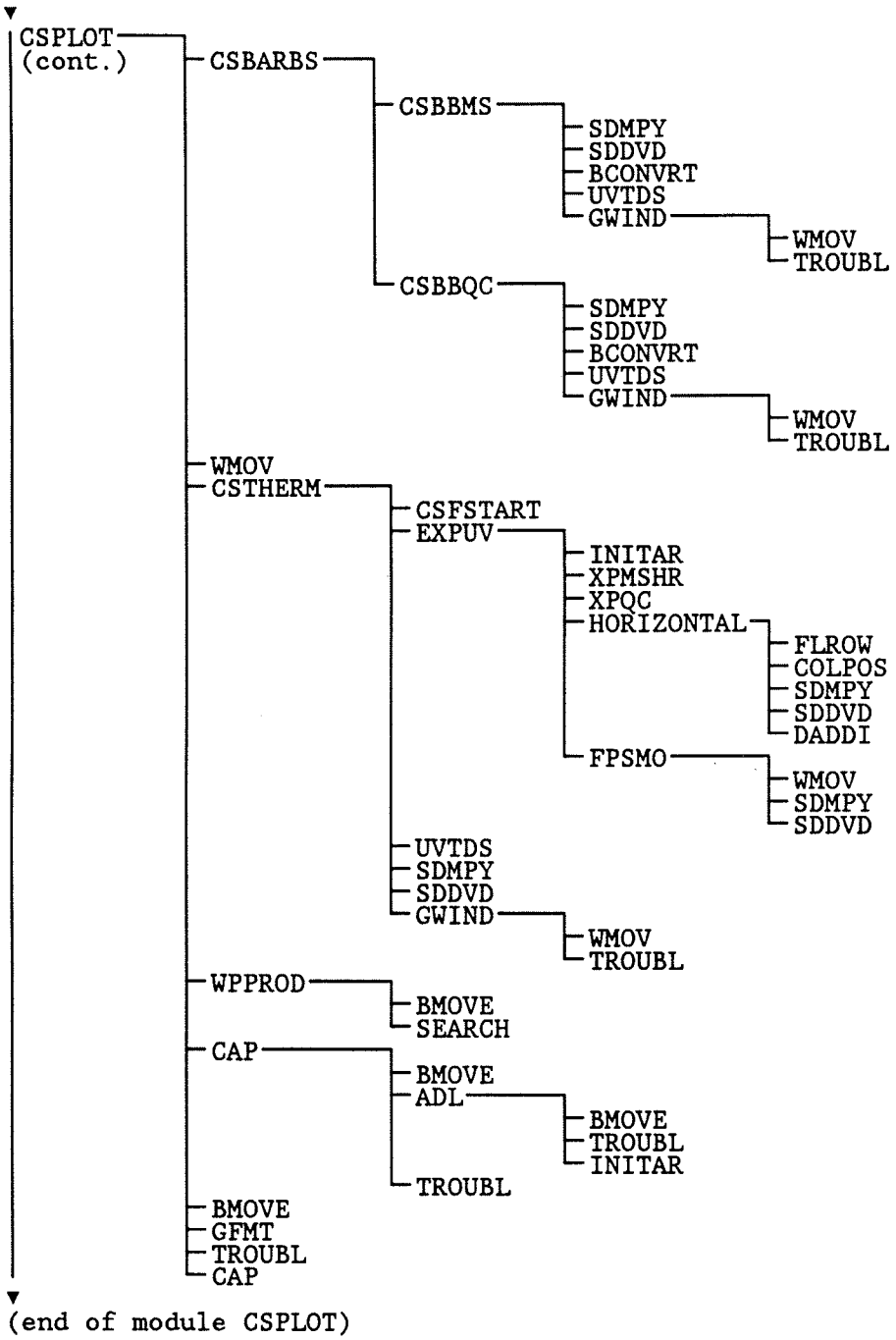

Figure 12. Structure flow diagram for program CSPLOT (cont.)

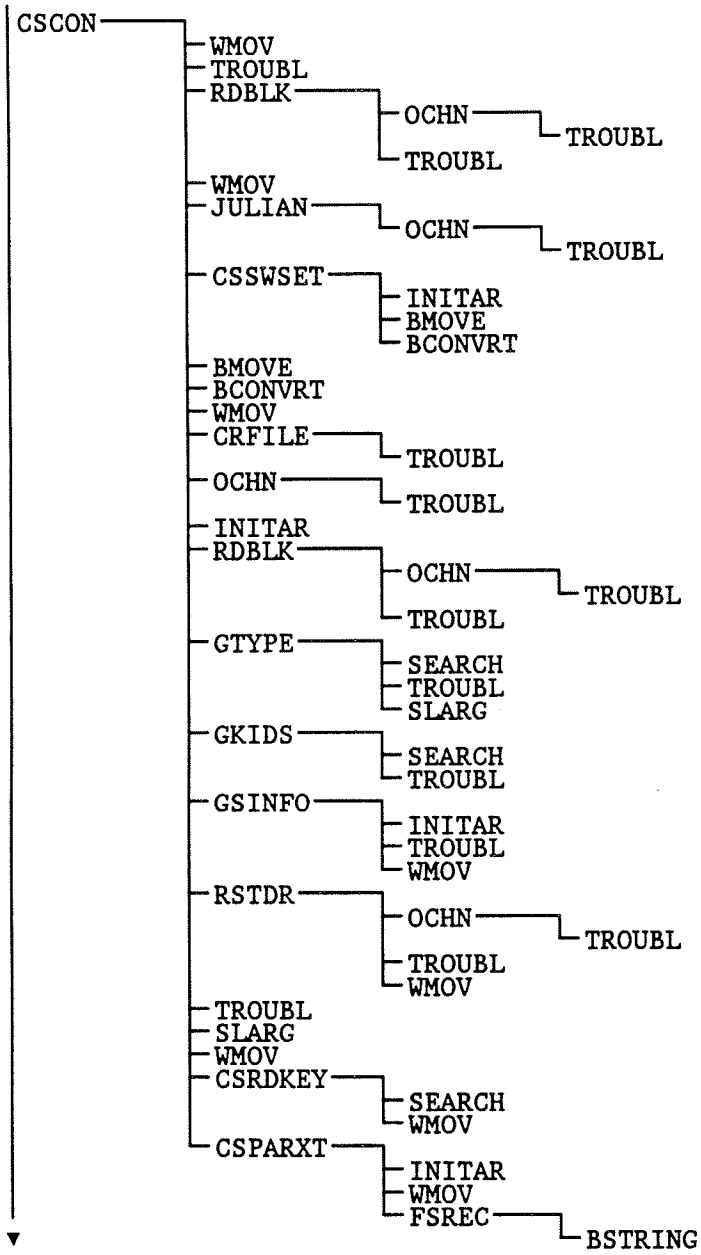

Figure 13. Structure flow diagram for program CSCON.

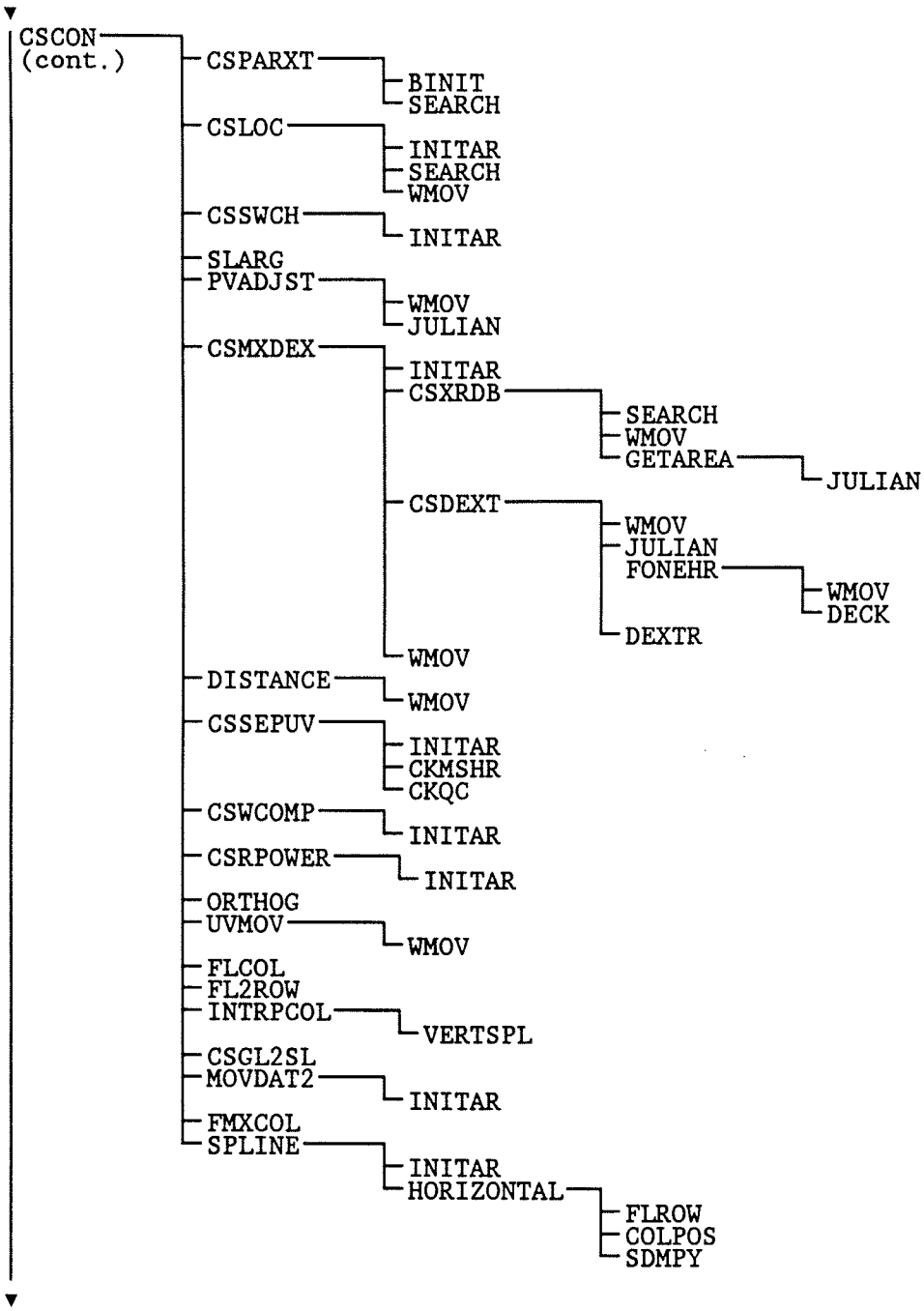

Figure 13. Structure flow diagram for program CSCON (cont.)

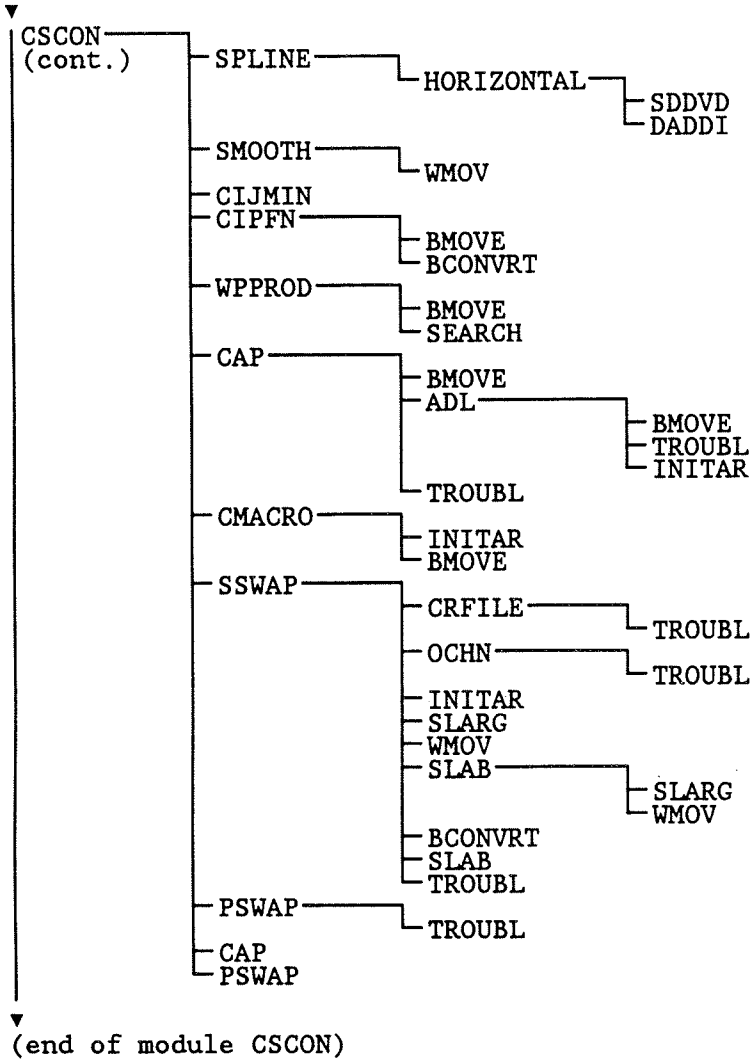

Figure 13. Structure flow diagram for program CSCON (cont.)

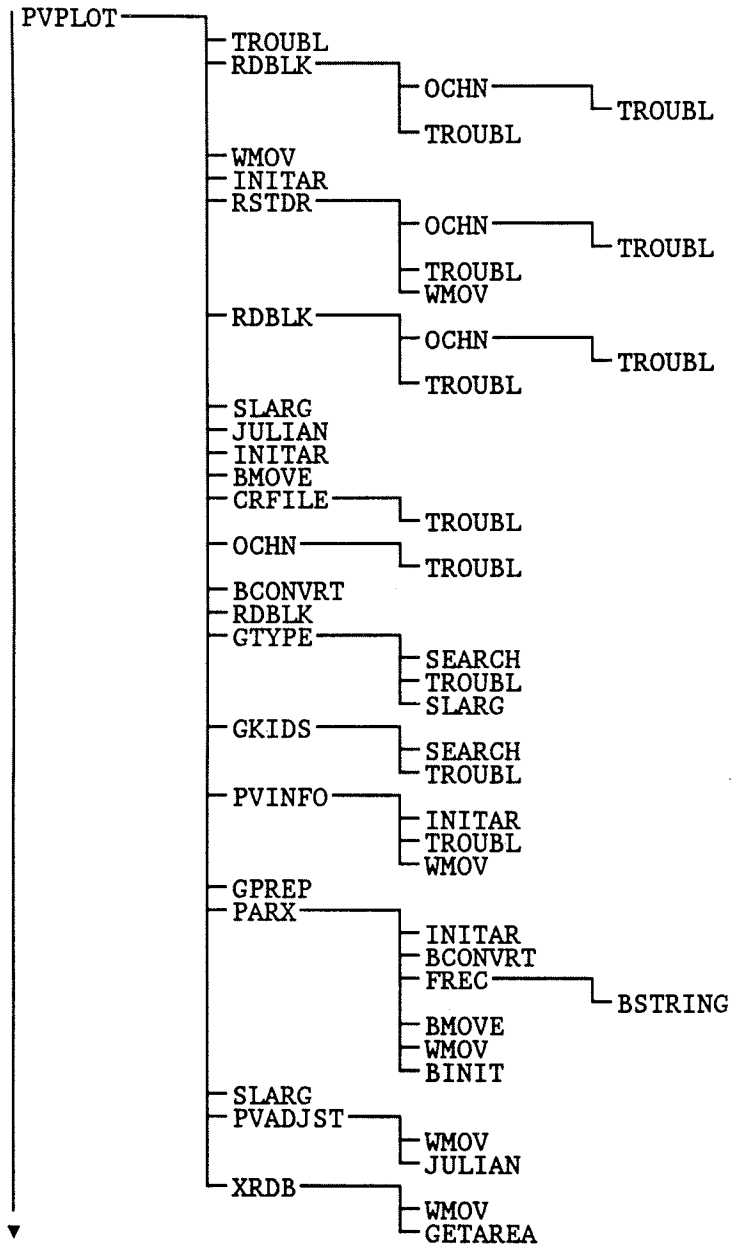

Figure 14. Structure flow diagram for program PVPLOT.

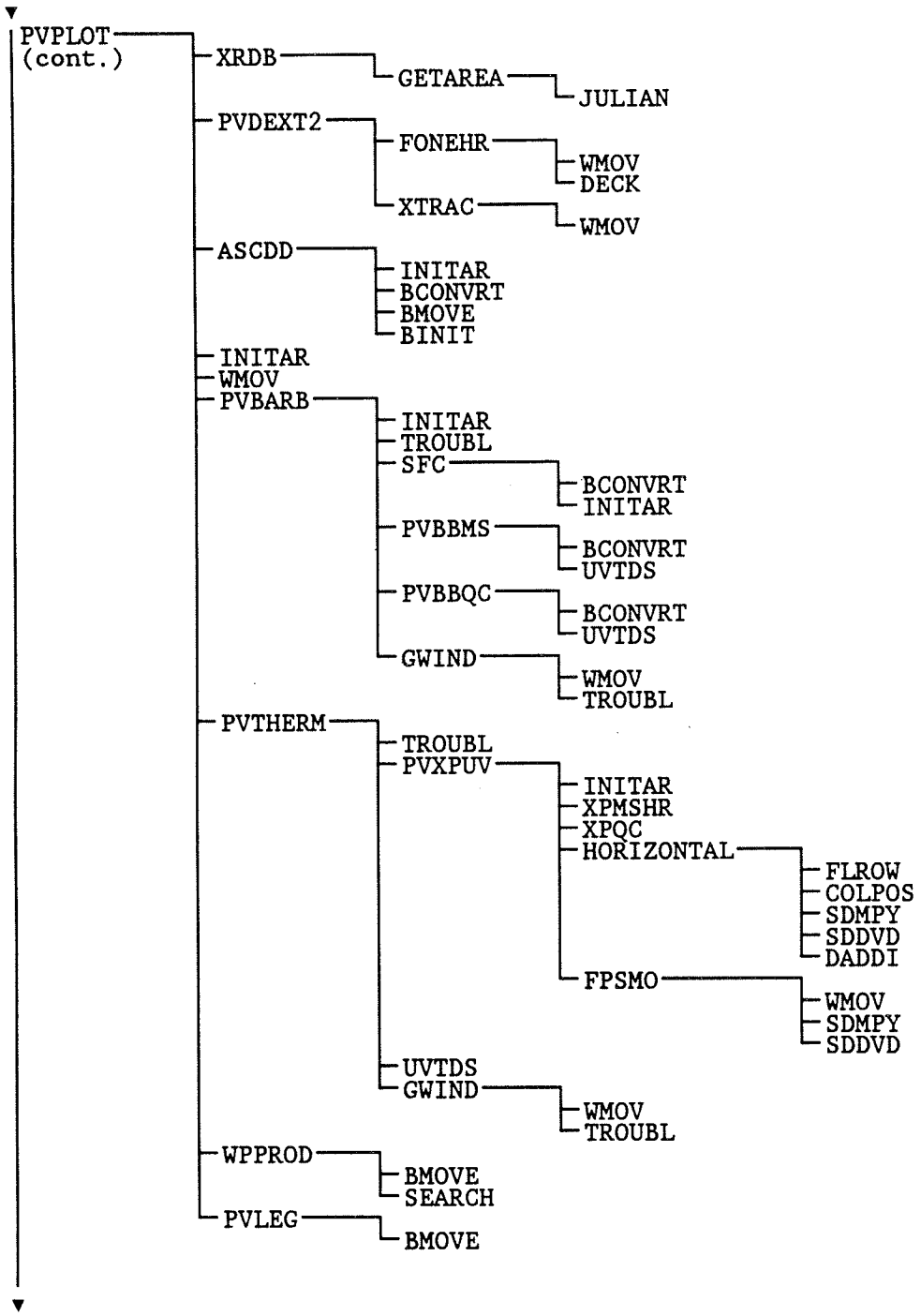

Figure 14. Structure flow diagram for program PVPLOT (cont.)

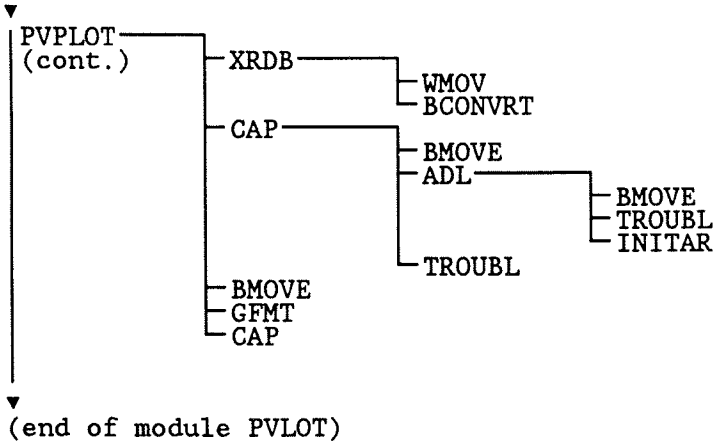

Figure 14. Structure flow diagram for program PVPLOT (cont.)

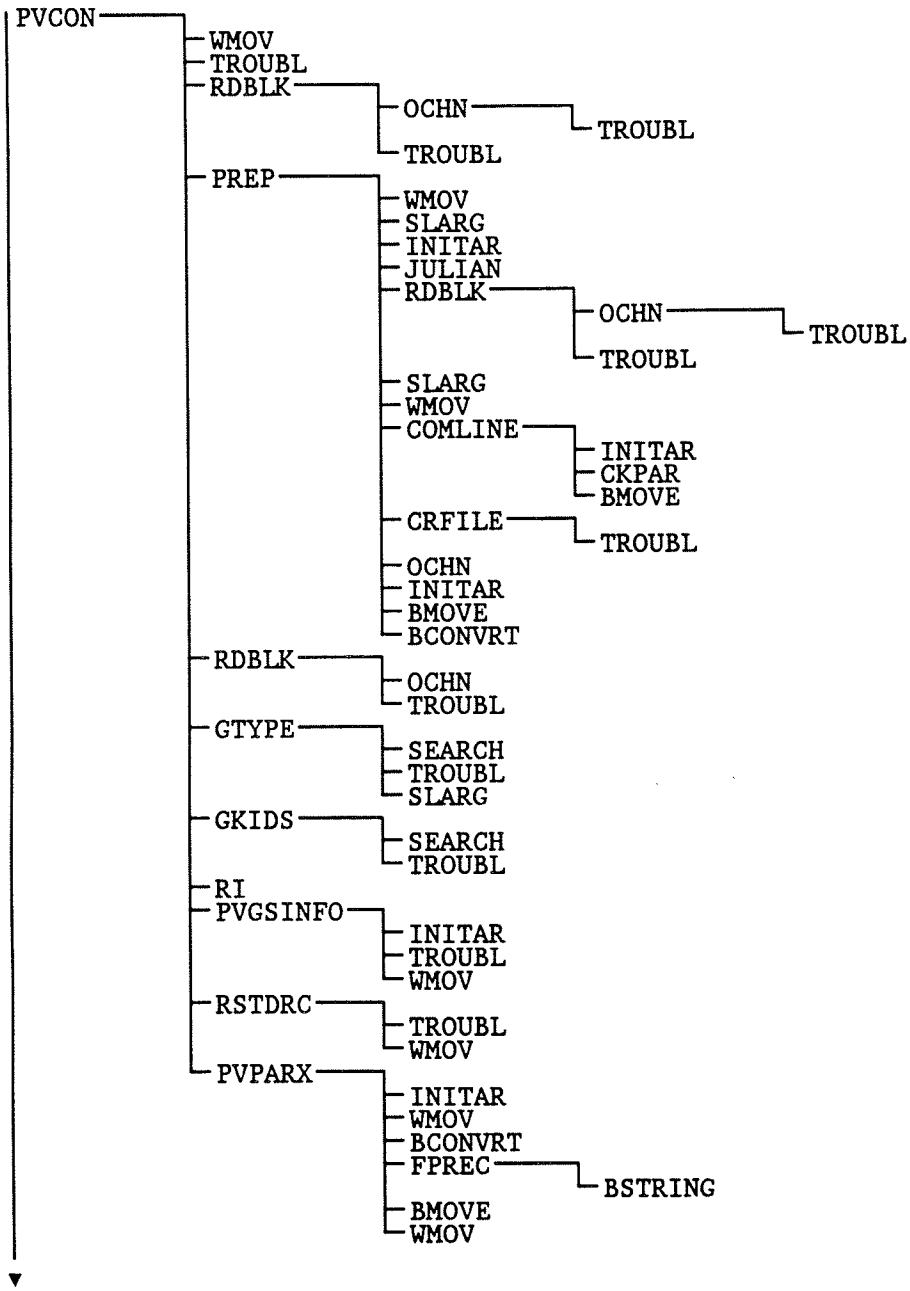

Figure 15. Structure flow diagram for program PVCON.

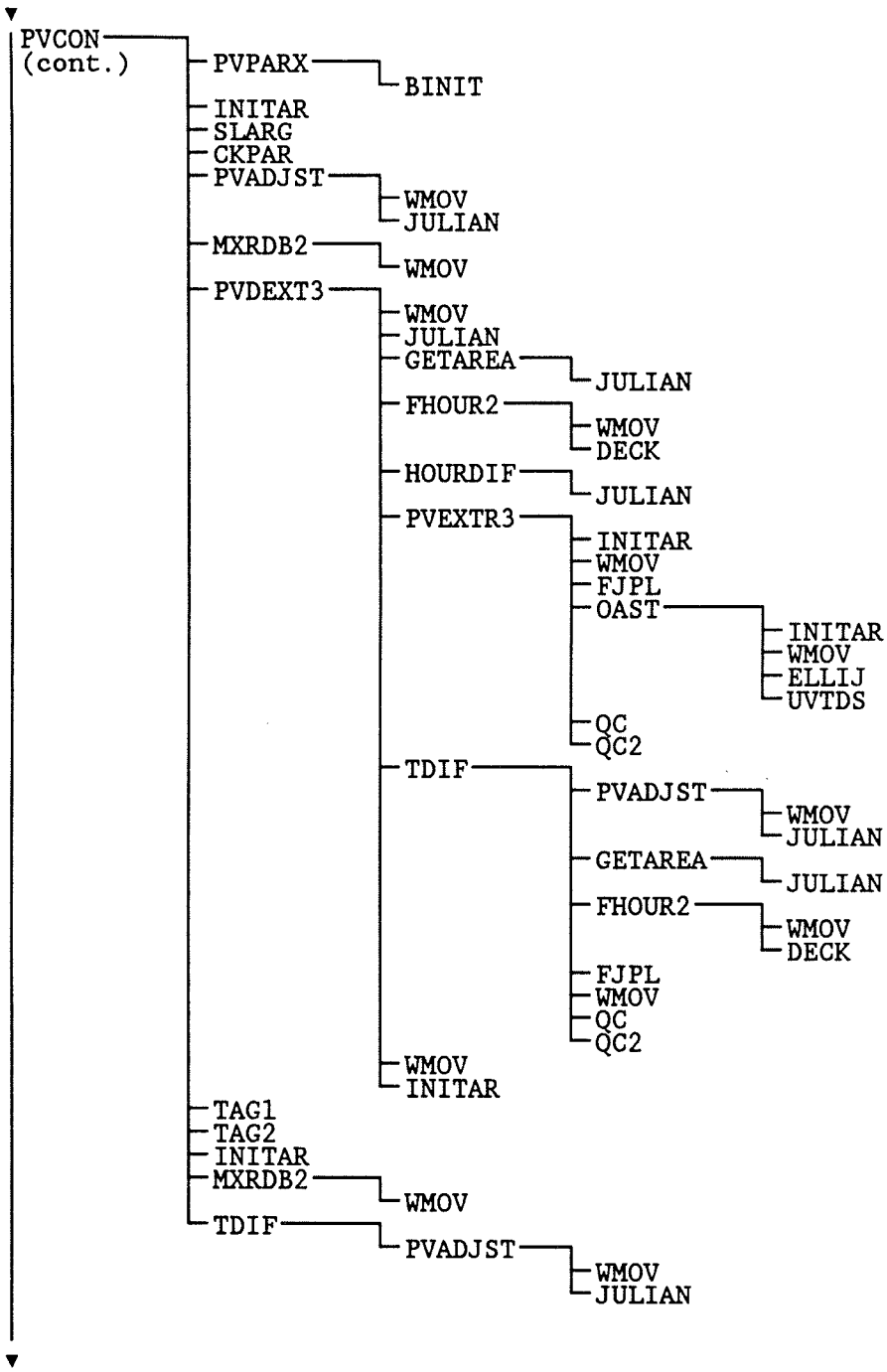

Figure 15. structure flow diagram for program PVCON (cont.)

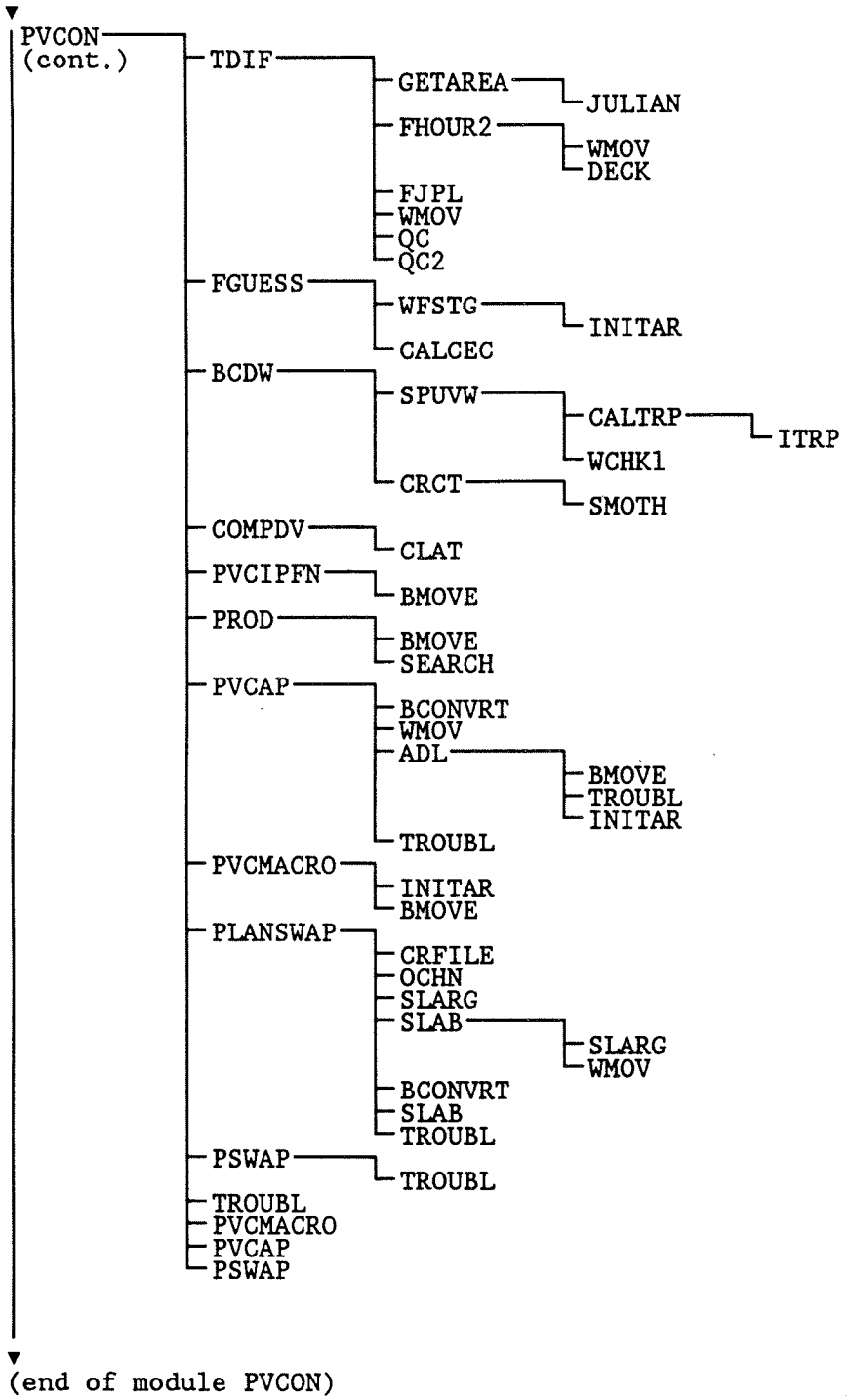

Figure 15. Structure flow diagram for program PVCON (cont.)

```
HHPLOT
  ├─VARDEF
  ├─TROUBL
  ├─INITAR
  ├─RSTDR
  │   ├─OCHN
  │   │   └─TROUBL
  │   ├─TROUBL
  │   └─WMOV
  ├─RDBLK
  │   ├─OCHN
  │   │   └─TROUBL
  │   └─TROUBL
  ├─WMOV
  ├─RDBLK
  ├─SLARG
  ├─JULIAN
  ├─SWXH
  │   ├─INITAR
  │   └─BMOVE
  ├─CRFILE
  │   └─TROUBL
  ├─OCHN
  │   └─TROUBL
  ├─INITAR
  ├─BMOVE
  ├─BCONVRT
  ├─RDBLK
  ├─GTYPE
  │   ├─SEARCH
  │   ├─TROUBL
  │   └─SLARG
  ├─GKIDS
  │   ├─SEARCH
  │   └─TROUBL
  ├─RDKEY
  │   └─WMOV
  ├─WMOV
  ├─DEXTER
  │   ├─INITAR
  │   ├─WMOV
  │   ├─JULIAN
  │   ├─GETAREA
  │   │   └─JULIAN
  │   ├─FHOUR
  │   │   ├─WMOV
  │   │   └─DECK
  │   ├─HRDIF
  │   │   └─JULIAN
  │   ├─DEXTR
  │   └─WMOV
  ├─WMOV
  └─RADJST
      └─WMOV
▼
```

Figure 16. Structure flow diagram for program HHPLOT.

```
▼
HHPLOT ──┐
(cont.)  ├─ RADJST ──┐
         │           └─ JULIAN
         ├─ INITAR
         ├─ WMOV
         ├─ HPLOT ──┐
         │          └─ GPREP
         ├─ ASCDD ──┐
         │          ├─ INITAR
         │          ├─ BCONVRT
         │          └─ BMOVE
         ├─ WMOV
         ├─ UVCOMP ──┐
         │           ├─ INITAR
         │           ├─ MSHEAR
         │           ├─ HHQC
         │           └─ VERTSPL
         ├─ HELICITY ──┐
         │             ├─ INITAR
         │             ├─ INFLOW ──┐
         │             │            └─ BCONVRT
         │             ├─ UVTDS
         │             ├─ UVT
         │             └─ INFLOW
         ├─ DISGRAPH ──┐
         │             └─ CONV ──┐
         │                       └─ BCONVRT
         ├─ HGRAPH ──┐
         │           ├─ INITAR
         │           ├─ BCONVRT
         │           └─ CHARS
         ├─ WPPROD ──┐
         │           ├─ BMOVE
         │           └─ SEARCH
         ├─ CAP ──┐
         │        ├─ BMOVE
         │        ├─ ADL ──┐
         │        │        ├─ BMOVE
         │        │        ├─ TROUBL
         │        │        └─ INITAR
         │        └─ TROUBL
         ├─ COPYDB ──┐
         │           ├─ BMOVE
         │           ├─ GFMT
         │           └─ TROUBL
         └─ CAP
▼
(end of module HHPLOT)
```

Figure 16. Structure flow diagram for program HHPLOT (cont.)

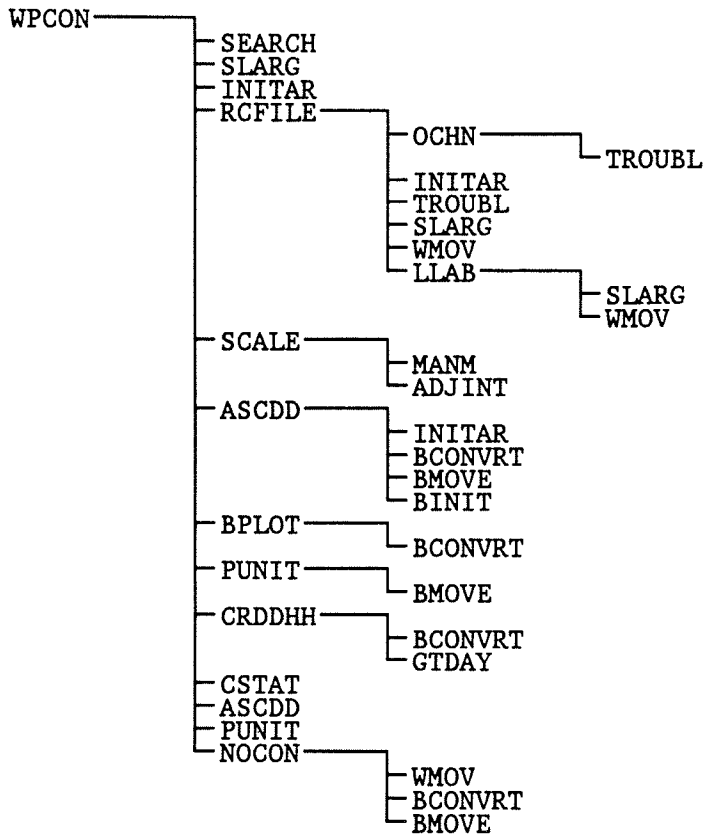

Figure 17. Structure flow diagram for program WPCON.

```
TDLMCPWPD
TTAA00 KTDL 171719
                    TIME SECTION AND WIND ALERT THRESHOLD MENU
PRODUCTS              STA   BASE HT  HOURS   CONTOUR  ALERT    FLAGGED  HEIGHT
                            (M*100) #   END  INTERVAL THRESHOLD DATA?  INTERVAL
HORIZONTAL WIND      [ ]    [  ]  [  ]  [  ]                     [ ]   (M*250)
HORIZONTAL SPEED     [ ]    [  ]  [  ]  [  ]  [  ]A  [   ]G
THERMAL WIND         [ ]    [  ]  [  ]  [  ]                            [   ]E
WIND SPEED SHEAR     [ ]    [  ]  [  ]  [  ]  [  ]A  [   ]D             [   ]E
WIND DIRECTION SHEAR [ ]    [  ]  [  ]  [  ]  [  ]I                     [   ]E
U/V-WIND COMPONENTS  [ ]    [  ]  [  ]  [  ]  [  ]A          KINEMATIC STATION
W-WIND COMPONENT     [ ]    [  ]  [  ]  [  ]  [  ]H  [   ]B    SELECTIONS
PERTURBATION WIND    [ ]    [  ]  [  ]  [  ]
RETURNED POWER       [ ]    [  ]  [  ]  [  ]  [  ]F          [W]=[   ,   ,   ]
DERIVED DIVERGENCE   [    ] [  ]  [  ]  [  ]  [  ]C          [X]=[   ,   ,   ]
DERIVED VERT. VEL.   [    ] [  ]  [  ]  [  ]  [  ]H          [Y]=[   ,   ,   ]
DERIVED VORTICITY    [    ] [  ]  [  ]  [  ]  [  ]C          [Z]=[   ,   ,   ]
 DEFAULTS: STA - NONE; HEIGHTS - MSL; HOURS - 16 TO PRESENT; FLAGGED DATA? - Y
A - 10 KT        F - 10 DB                 STATION SELECTIONS
B - 30 CM/S      G - 100 KT  [1]=[   ,   ,   ,   ,   ,   ,   ,   ,   ,   ]
C - .00004 RAD/S H - 10 CM/S [2]=[   ,   ,   ,   ,   ,   ,   ,   ,   ,   ]
D - 25 KT/250 M  I - 40 DEG  [3]=[   ,   ,   ,   ,   ,   ,   ,   ,   ,   ]
E - 1000 M BETWEEN LAYERS    [4]=[   ,   ,   ,   ,   ,   ,   ,   ,   ,   ] [ ]
```

Figure 18. First page of preformat cccMCPWPD which may be edited prior to running the time section subsystem of the wind profiler software. User options include stations, base heights, number of hours, ending hours, contour intervals, alert thresholds, flagged data, and height intervals.

```
                          CROSS SECTION MENU
PRODUCTS              STATION   BASE HT  HOUR   CONTOUR   FLAGGED    HEIGHT
                       GROUPS   (M*100)         INTERVAL   DATA?    INTERVAL
HORIZONTAL WIND       [     ]   [  ]    [  ]                [ ]     (M*250)
ORTHOGONAL COMPONENTS [     ]   [  ]    [  ]    [  ]A
W-WIND COMPONENT      [     ]   [  ]    [  ]    [  ]B
THERMAL WIND          [     ]   [  ]    [  ]                        [   ]C
RETURNED POWER        [     ]   [  ]    [  ]    [  ]D
 DEFAULTS: STATIONS - NONE; BASE HT - MSL; HOUR - CURRENT; FLAGGED DATA? - Y
 A - 10 KT                          STATION SELECTIONS
 B - 10 CM/S                 [W]=[   ,   ,   ,   ,   ,   ,   ,   ]
 C - 1000 M BETWEEN LAYERS   [X]=[   ,   ,   ,   ,   ,   ,   ,   ]
 D - 5 DB                    [Y]=[   ,   ,   ,   ,   ,   ,   ,   ]
                             [Z]=[   ,   ,   ,   ,   ,   ,   ,   ]
                                                                  [ ]
```

Figure 19. Second page of preformat cccMCPWPD which may be edited prior to running the cross section subsystem of the wind profiler software. User options include stations, base heights, hours, contour intervals, flagged data, and height intervals.

```
                                PLAN VIEW MENU
PRODUCTS              PRESSURE  HOUR     #HOURS    CONTOUR   FLAGGED  HEIGHT
                       LEVELS            DIFF     INTERVAL   DATA?  INTERVAL
HORIZONTAL WIND        [  ]     [  ]                          [ ]    (M*250)
HORIZONTAL SPEED       [  ]     [  ]               [  ]A
W-WIND COMPONENT       [  ]     [  ]               [  ]B
STREAMLINES            [  ]     [  ]
DERIVED VORTICITY      [  ]     [  ]               [  ]D
DERIVED DIVERGENCE     [  ]     [  ]               [  ]D
THERMAL WIND           [  ]     [  ]                                   [   ]E
TIME DIFF OF U-WIND    [  ]     [  ]     [  ]      [  ]A
TIME DIFF OF V-WIND    [  ]     [  ]     [  ]      [  ]A
TIME DIFF OF W-WIND    [  ]     [  ]     [  ]      [  ]B
TIME DIFF OF DIV.      [  ]     [  ]     [  ]      [  ]D
TIME DIFF OF VORT.     [  ]     [  ]     [  ]      [  ]D
RETURNED POWER         [  ]     [  ]               [  ]C
  DEFAULTS: HEIGHT - STD; HOUR - CURRENT; #HOURS DIFF - 3; FLAGGED DATA? - Y
A - 10 KT                          PRESSURE LEVEL SELECTIONS
B - 10 CM/S                  [1]=[ , , , , , , , ]
C - 5 DB                     [2]=[ , , , , , , , ]
D - .00004 RAD/S             [3]=[ , , , , , , , ]
E - 1000 M BETWEEN LAYERS    [4]=[ , , , , , , , ]
                                                                        [ ]
```

Figure 20. Third page of preformat cccMCPWPD which may be edited prior to running the plan view subsystem of the wind profiler software. User options include pressure levels, hours, hour intervals, contour intervals, flagged data, and height intervals.

```
WPSET

      CURRENT SETTINGS

EXTENSION OF CONTROL FILE:        0

NUMBER OF HOURS TO STORE:         24

AFOS NAME OF BUFR PRODUCT:        NMCWPDERL

AFOS NAME OF MESSAGE PRODUCT:     TDLWPDMSG

DATA FILE OF DECODED DATA:        WPDATA

STATIONS:  PLT LTH WDL CNW VCI PRC HVL
STATIONS:  BLM WSM WNC FBY BLR NLG DQU
STATIONS:  LMN

  1) CHANGE EXTENSION OF CONTROL FILE.
  2) CHANGE MAXIMUM NUMBER OF HOURS TO STORE FOR EACH STATION.
  3) ADD STATION NAME TO LIST
  4) DELETE STATION NAME FROM LIST.
  5) CHANGE NAME OF AFOS BUFR PRODUCT.
  6) CHANGE NAME OF DATA FILE.
  7) CHANGE NAME OF AFOS MESSAGE PRODUCT.
  8) EXIT

CHOICE:
```

Figure 21. Sample interactive session printout from program WPSET which creates or changes control file WP.CF. The user selects the numerical extension of the options file, the number of decoded hours to store in the decoded file, the name of the incoming BUFR product, the name of the decoded file, and the name of the message product.

```
PROFILER DATA CAPTURE STATS FROM 2/12/93   1Z TO 4/12/93  0Z
PLT   99.0%                    LTH   99.3%
FBY   67.4%                    HBR   99.3%
WSM   95.9%                    HVL   99.4%
NDS   84.6%                    LMN   96.5%
VCI   94.4%                    HKL   98.3%
PRC   98.7%                    CNW   96.5%
SLA   98.3%                    NLG   95.2%
WNC   99.5%                    BLR   99.4%
WLC    0.0%                    BLM   97.9%
VBG    0.0%                    WDL   95.6%
DQU   68.7%                    OKO   77.4%
WNF   74.7%                    PAT   87.2%
JTN   99.1%                    TCU    0.0%
GDA   97.4%                    RWD   95.2%
MRR   88.7%                    MBW   90.5%
AZC   81.7%
PERCENTAGES BASED ON 1182 OF THE POSSIBLE 1416 HOURS
```

Figure 22. Sample data capture statistics, which identify the percentage of data received for each station. The data capture statistics ignore those hours when no data is received, because it is assumed that those hours represent computer downtime.

```
ZA0 PLT HORIZONTAL WIND
ZP0 PLT PERTURBATION WIND
ZA2 FBY HORIZONTAL WIND
ZT2 FBY THERMAL WIND
```

Figure 23. Sample output from file TSPLOT.AP which verifies the creation of products from program TSPLOT. Ouput from files TSCON.AP, TSKIN.AP, CSPLOT.AP, CSCON.AP, PVPLOT.AP, PVCON.AP, and HHPLOT.AP is similar.

```
TDLWPDMSG
TTAA00 KTDL 271032

THE W-WIND COMPONENT EXCEEDED 30cm/s AT PLT AT 10Z:

 2000m  2250m  2500m  2750m  3000m  3250m  3500m  3750m  4000m  4250m
 4500m  4750m  5000m  5250m  5500m  5750m  6000m  6250m  6500m  7000m

THE W-WIND COMPONENT EXCEEDED 30cm/s AT SBY AT 10Z:

 7000m  7250M

#END#
```

Figure 24. Sample output from file cccWPDMSG which contains alert messages indicating values which exceeded preselected thresholds.

Figure 25. Five-character station identification for wind profilers in the Wind Profiler Demonstration Network (WPDN). Note that the profiler for Wolcott, IN was moved to Homer, AK. Although not part of the WPDN, the Sudbury, MA profiler data had been available to users until it was moved to Vandenberg AFB in 1992.

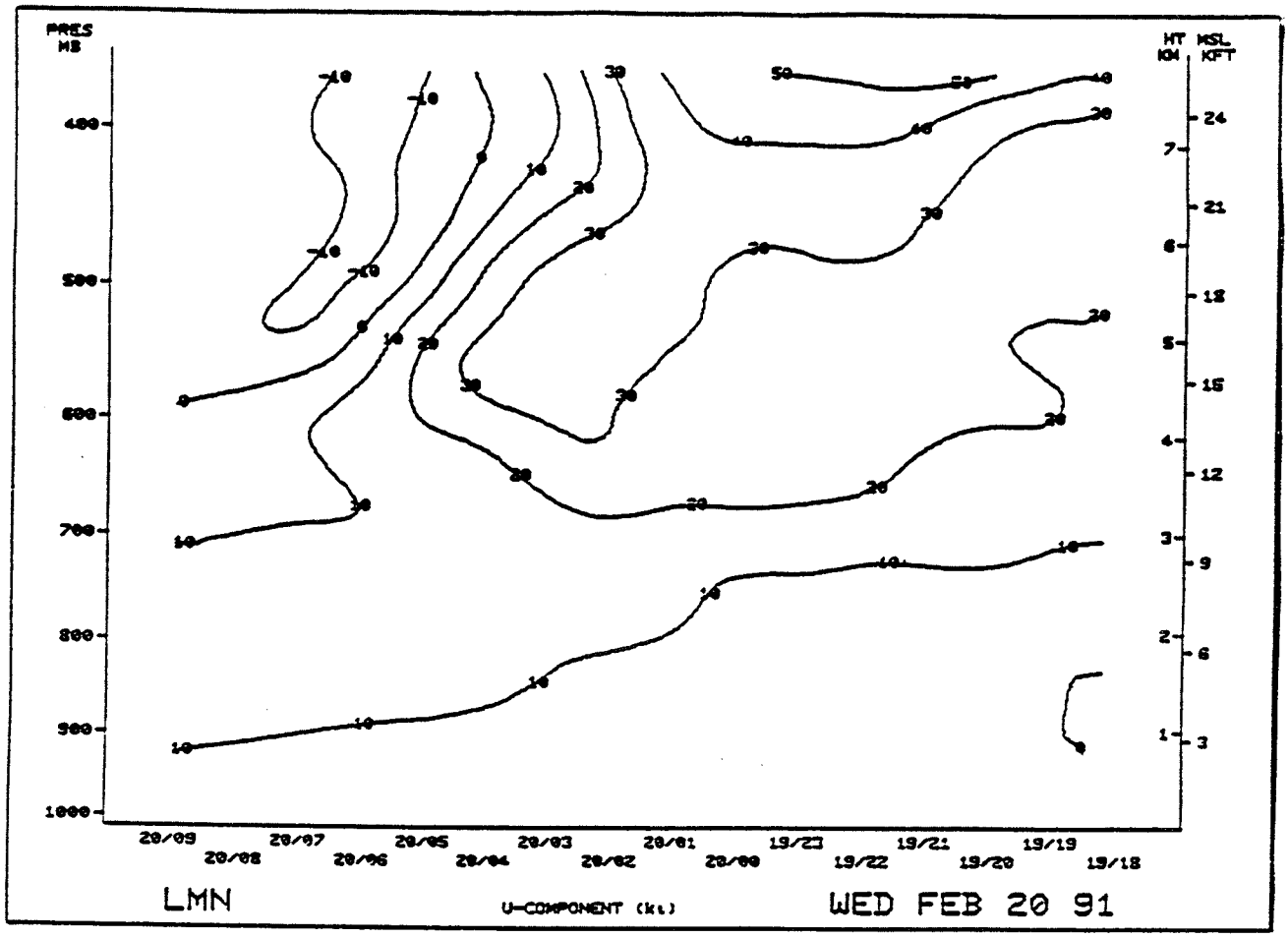

Figure 26. Sample time section display of the u-component of the wind from Lamont, OK. Other options include a base height of MSL, 16 hours of data ending at 0900 UTC, and a contour interval of 10 kt. In this example, the westerly component of the wind increased with height early in the 16-hour period, while late in the period, the westerly component near the surface gave way to an easterly component at the higher elevations.

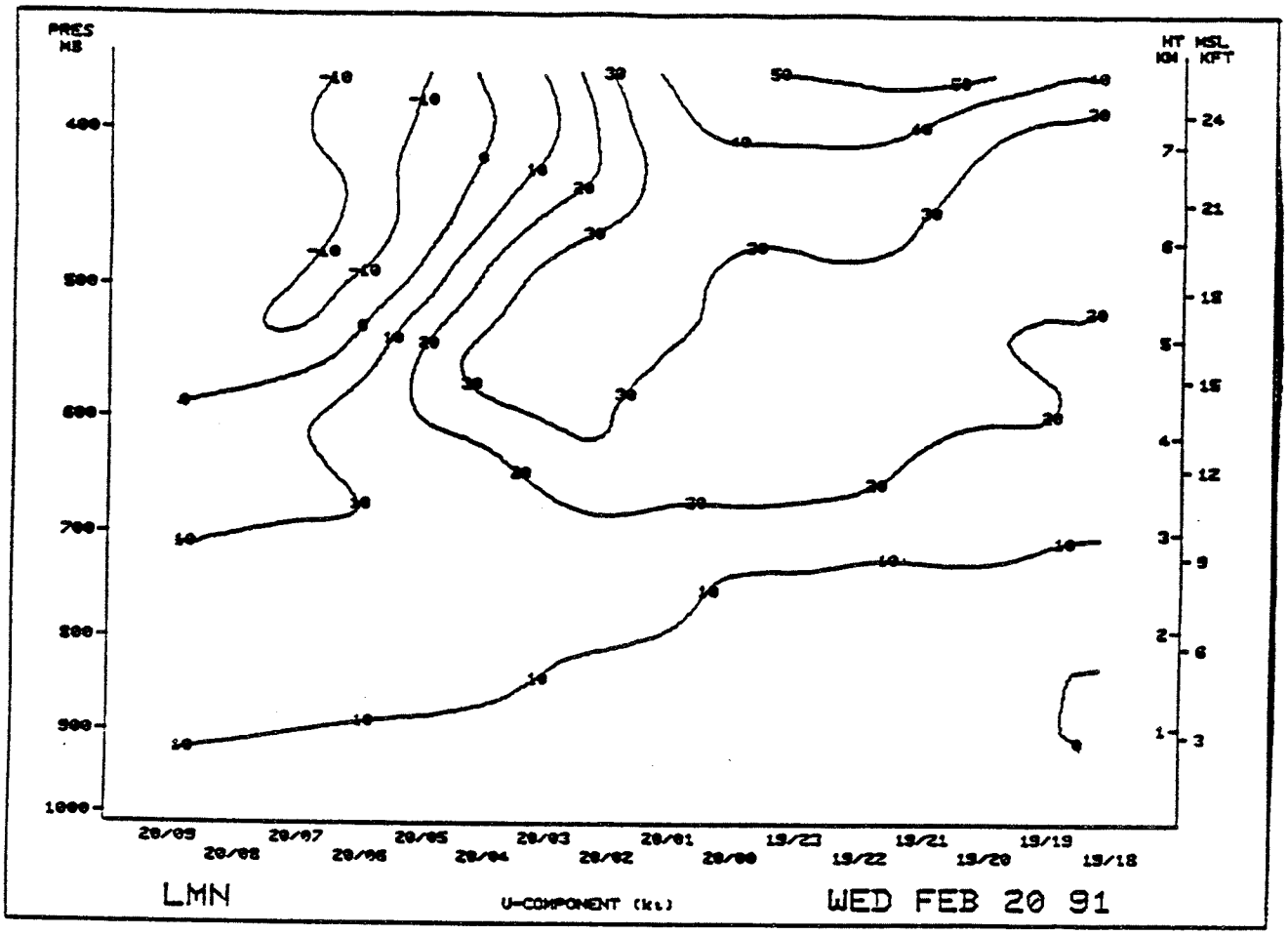

Figure 27. Sample time section display of the v-component of the wind from Lathrop, MO. Other options include a base height of 2200 m above MSL, 8 hours of data, ending at 1000 UTC, and a contour interval of 10 kt. In this example, the northerly component of the wind near the surface diminished with height, and became southerly in the higher elevations early in the period. Later in the period, a weak southerly component near the surface strengthened slightly with height.

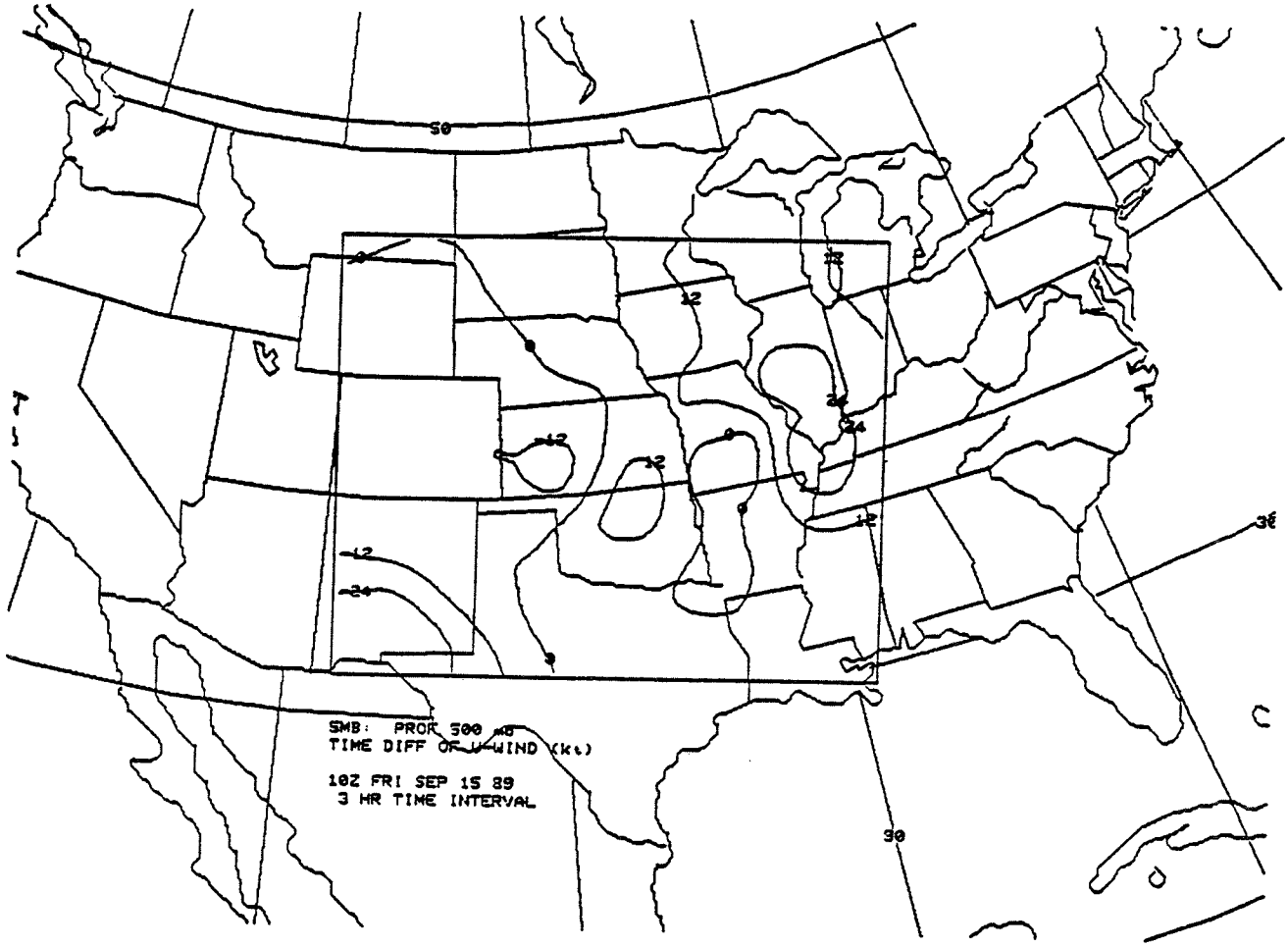

Figure 28. Sample plan view display of the time difference of the u-component of the wind at the 500 mb level. Other options include a 3-hour time interval ending at 1000 UTC, and a 12 kt contour interval. In this example, the westerly component of the wind increased during the period in the eastern portion of the network, but decreased in the western portion.

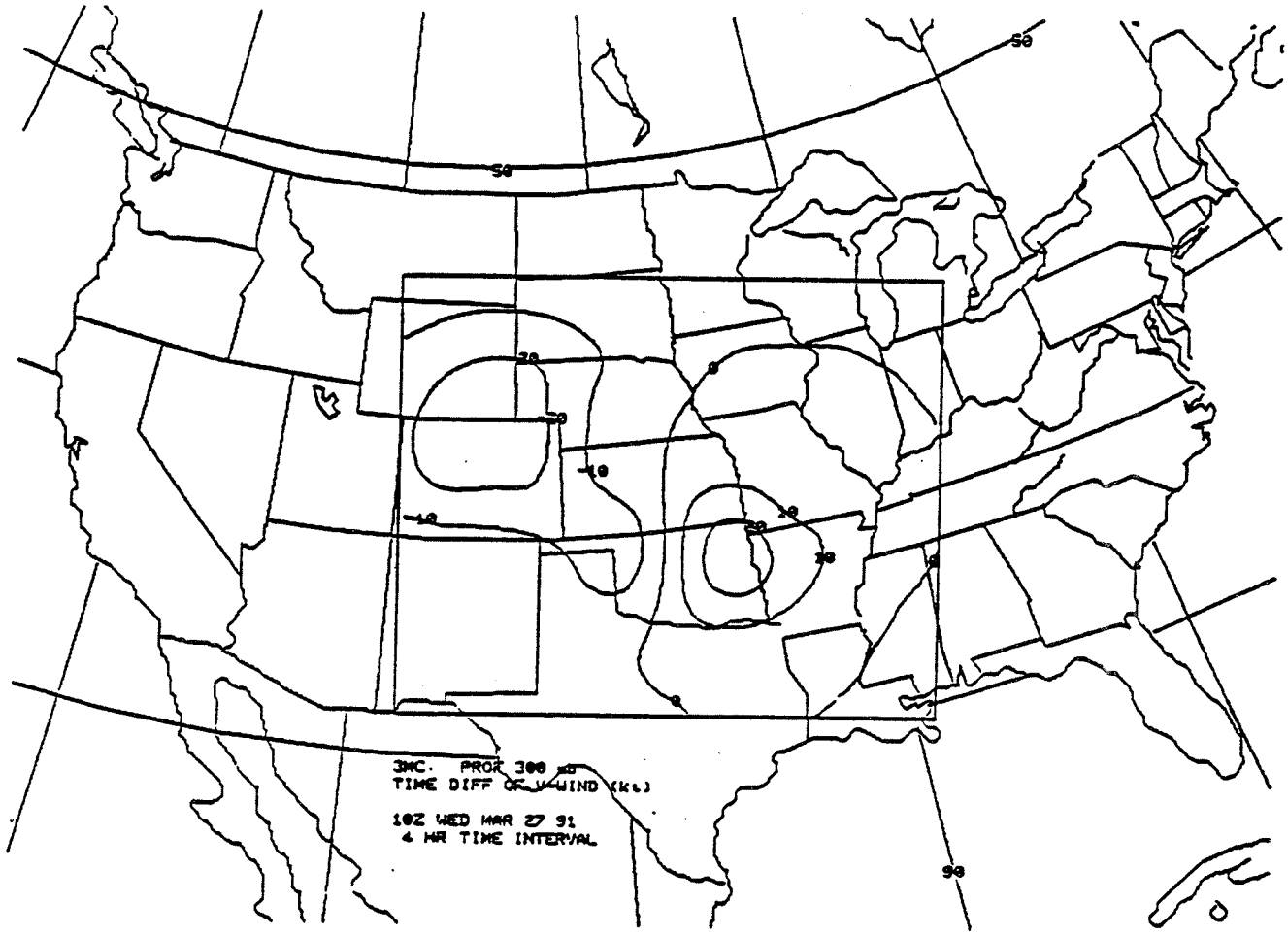

Figure 29. Sample plan view display of the time difference of the v-component of the wind at the 300 mb level. Other options include a 4-hour time interval, ending at 1000 UTC, and a 10 kt contour interval. In this example, the southerly component of the wind increased in intensity in the eastern portion of the network, but decreased in intensity in the western portion.

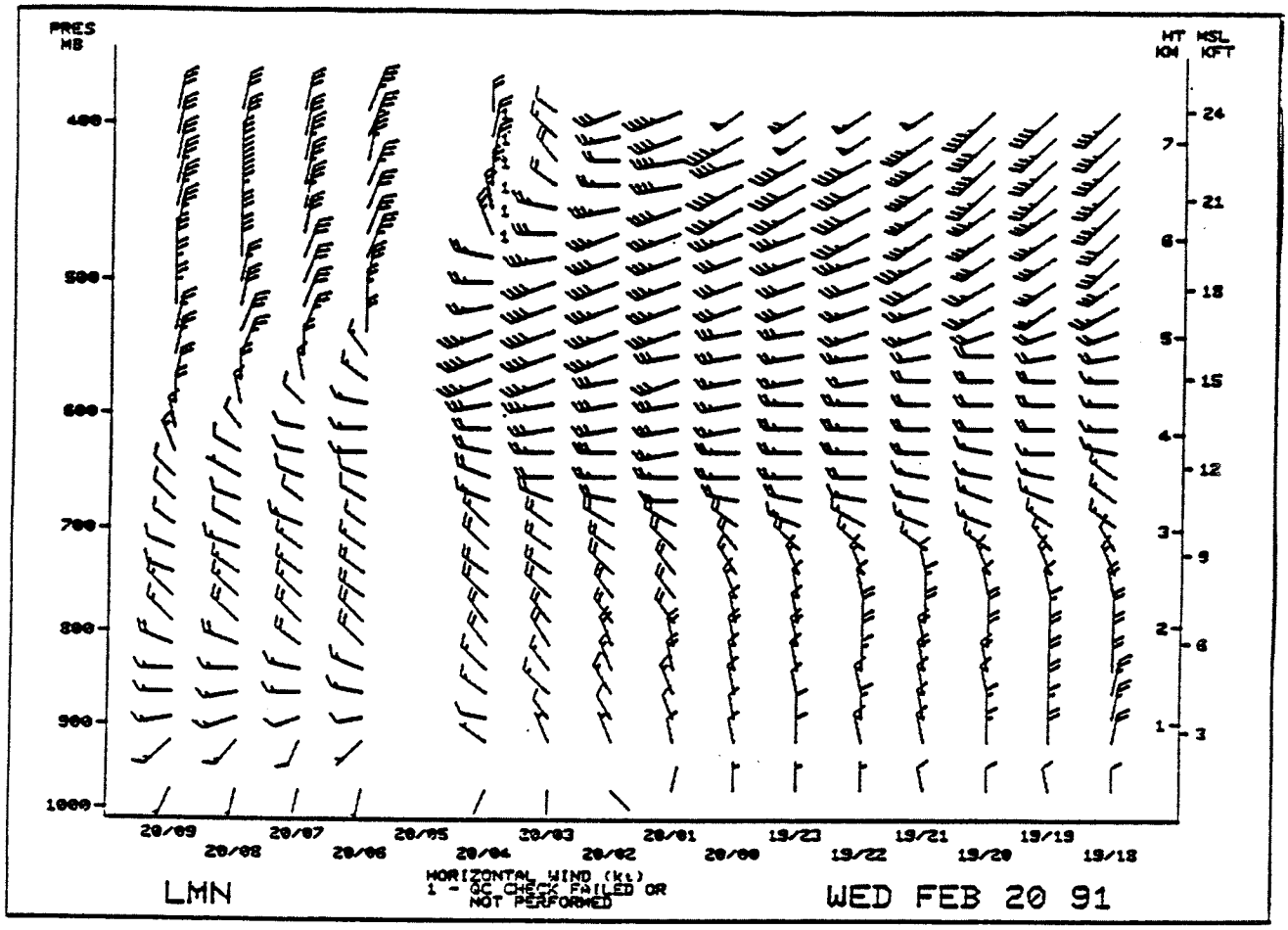

Figure 30. Sample time section display of the wind velocity from Lamont, OK. Other options include a base height of MSL, 16 hours of data, ending at 0900 UTC, with flagged data displayed. In the lower levels, northerly winds near the surface gave way to southwesterly flow, suggesting the passage of a surface high, while in the higher elevations, southwesterly flow eventually became northerly, suggesting the passage of an upper trough.

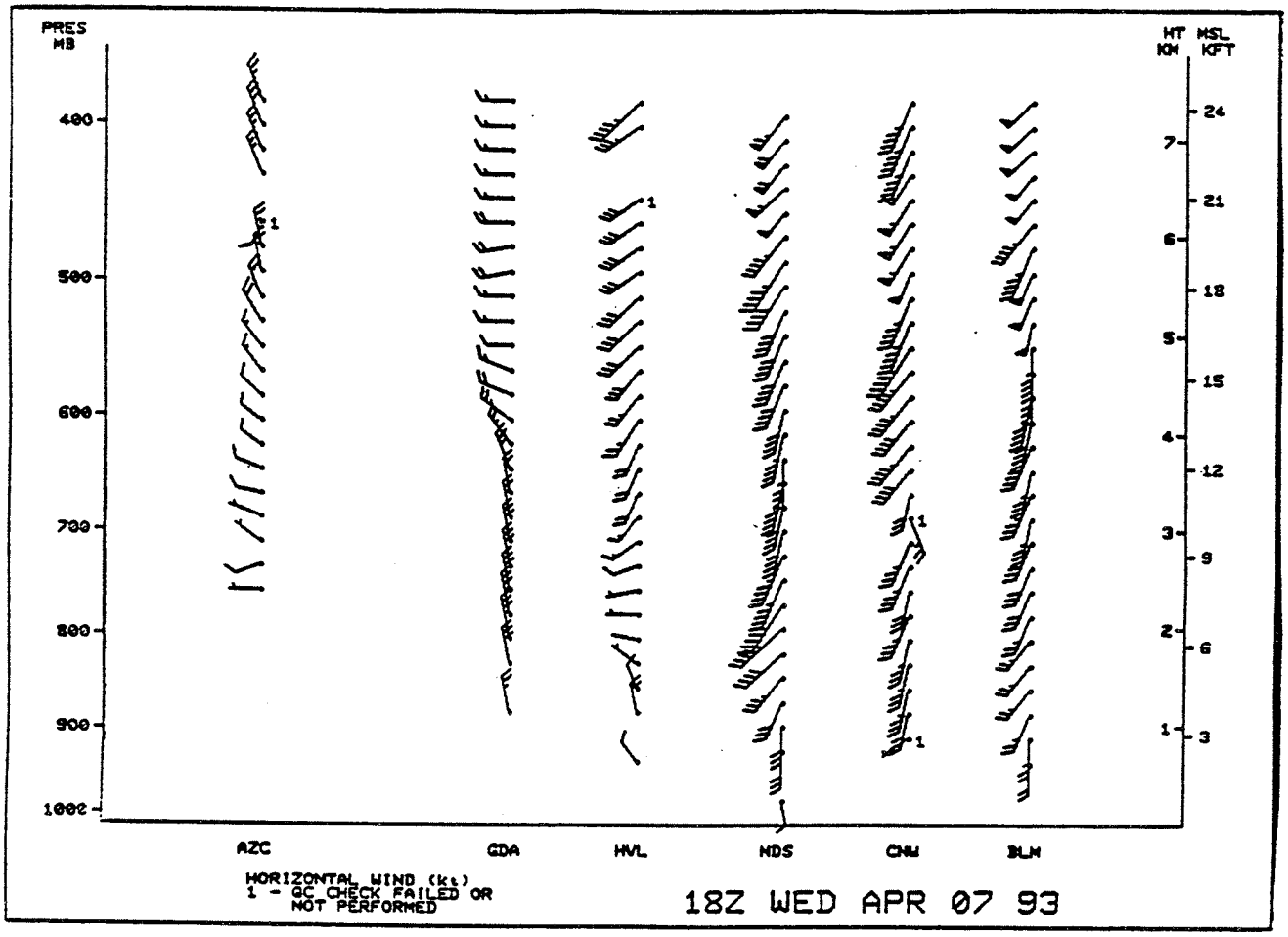

Figure 31. Sample cross section display of the wind velocity from Aztec, NM, Grenada, CO, Haviland, KS, Neodesha, KS, Conway, MO, and Bloomfield, MO. Other options include a base height of MSL at 1800 UTC, with flagged data displayed. In this example, a surface cold front was located between Haviland and Neodesha. The front tilted westward with height, and was near Grenada at the higher levels.

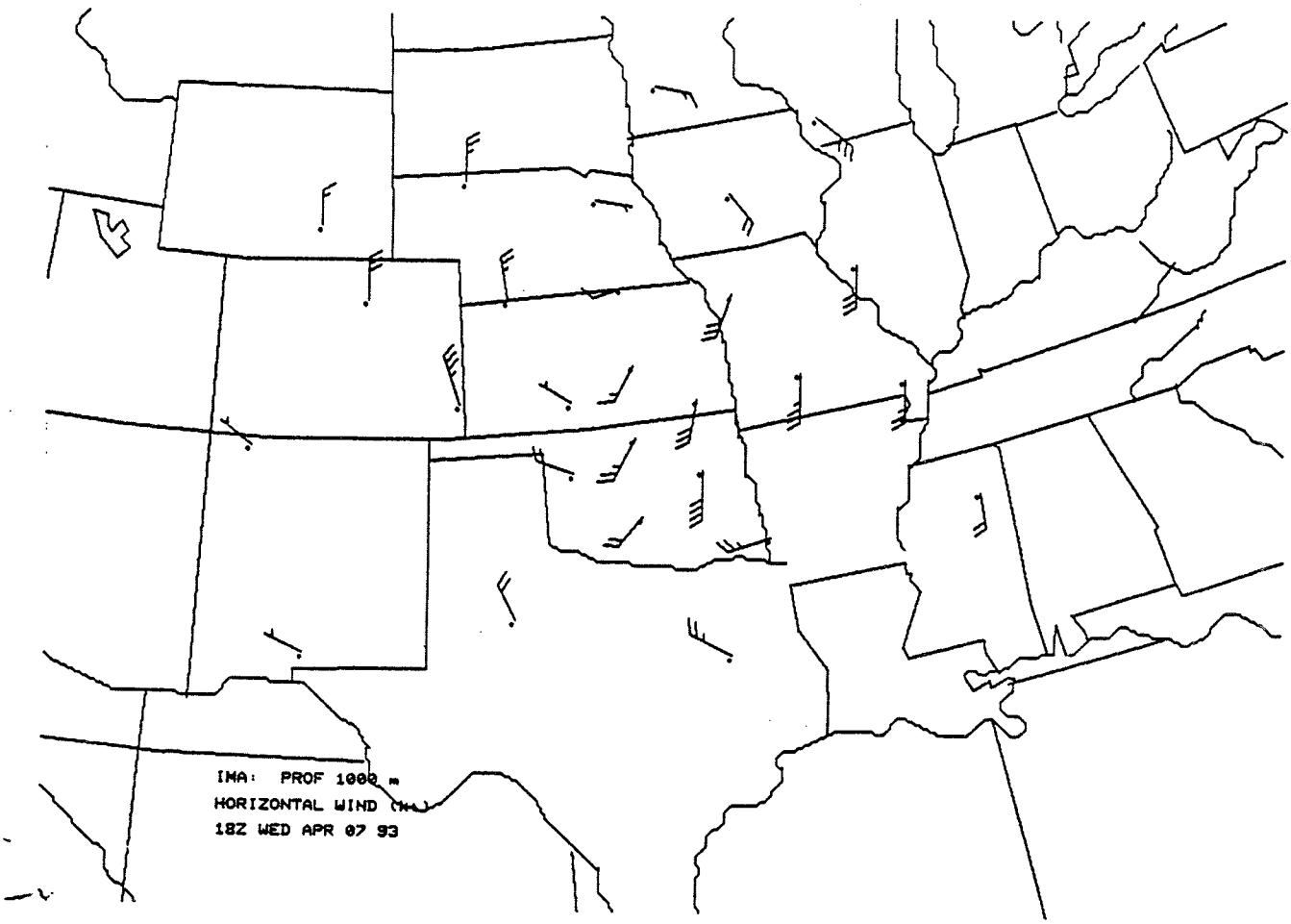

Figure 32. Sample plan view display of the wind velocity at the 1000 m level at 1800 UTC. The circulation of the entire network was influence by a low pressure system located in eastern Nebraska, with a cold front cutting through the Southern Plains.

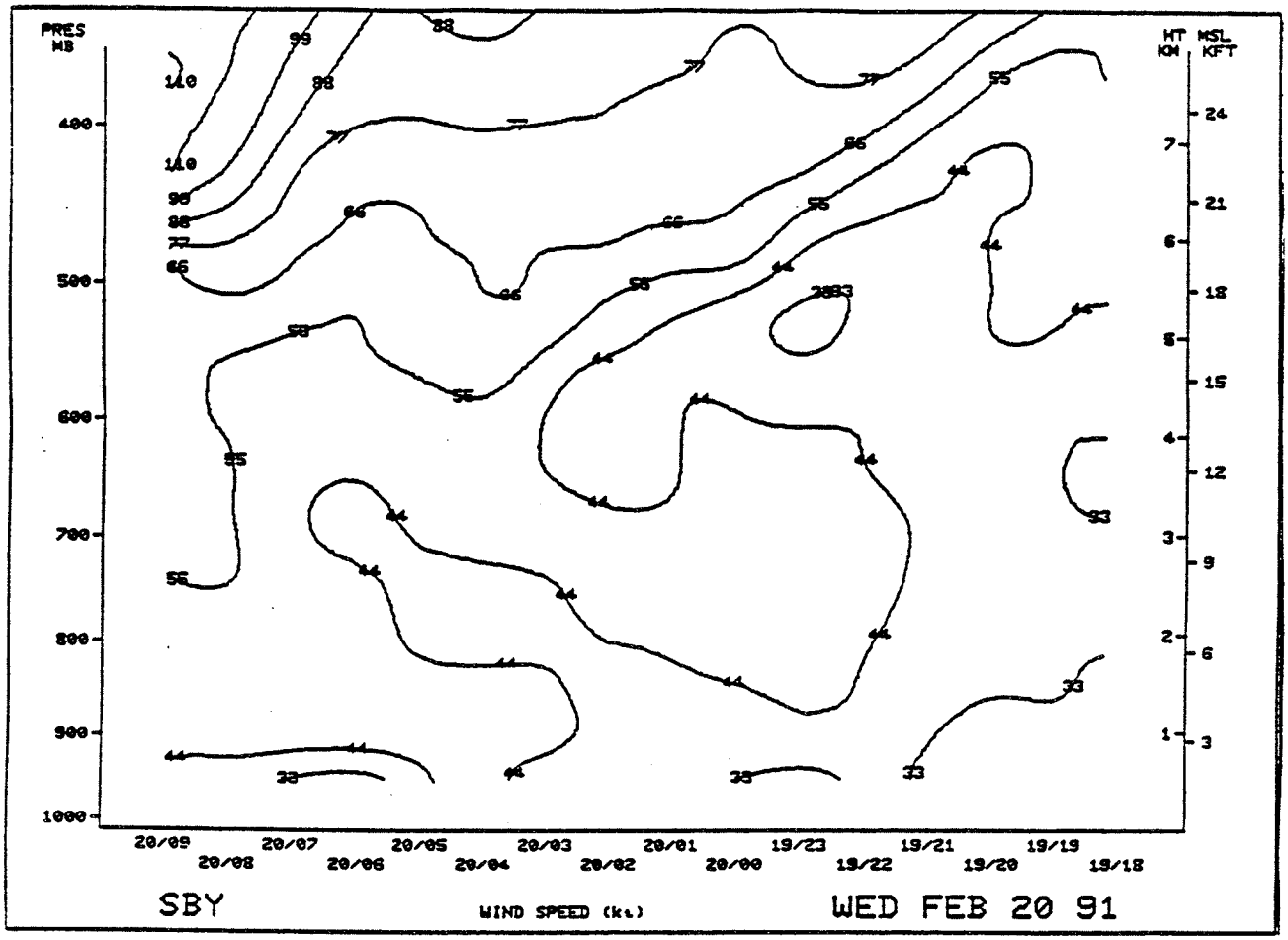

Figure 33. Sample time section display of wind speed from Sudbury, MA. Other options include a base height of MSL, 16 hours of data ending at 0900 UTC, and a contour interval of 11 kt. In this example, the wind speed increased dramatically with time at the higher levels, indicating the approach of a jet stream maximum.

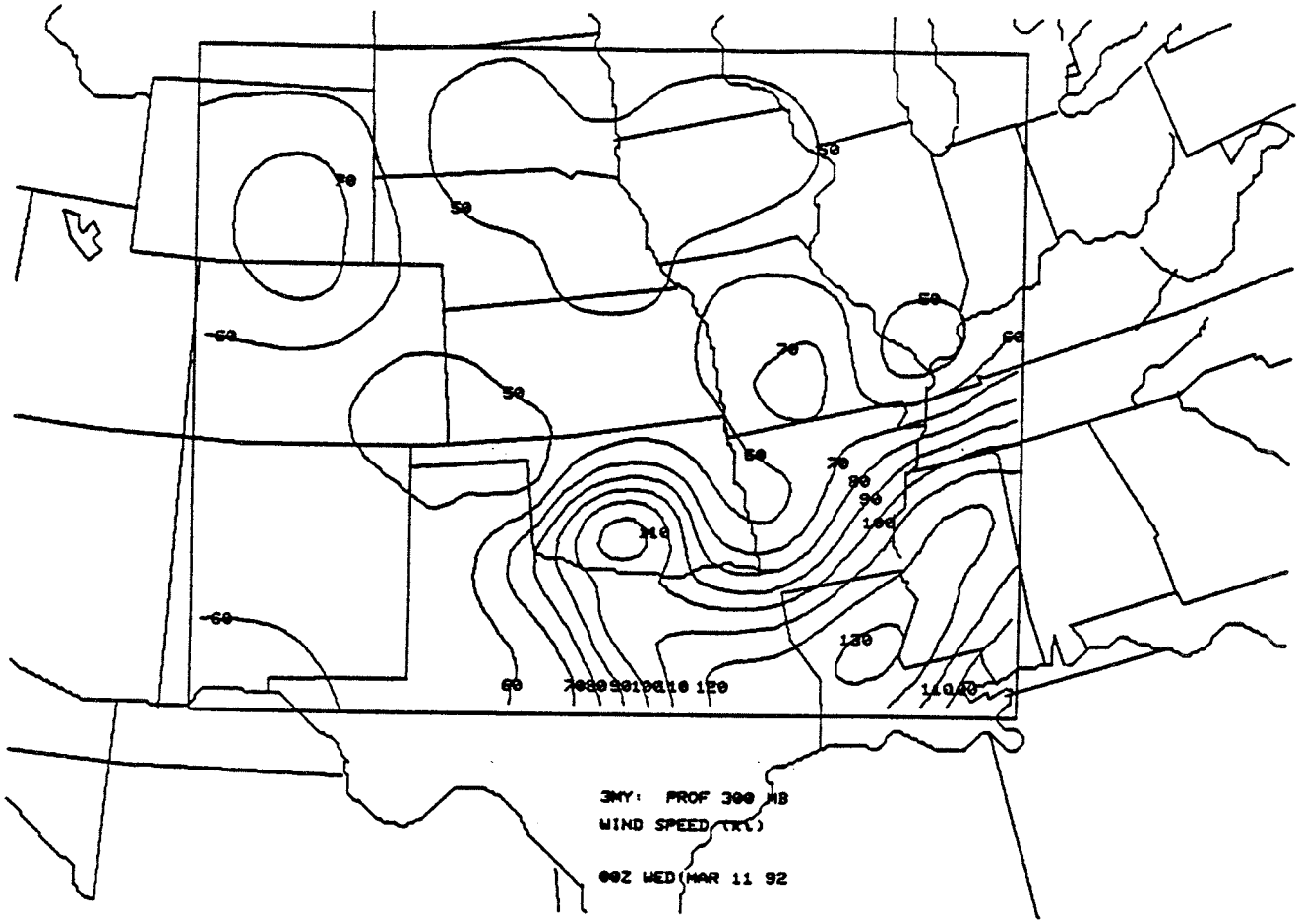

Figure 34. Sample plan view display of the wind speed at the 300 mb level at 0000 UTC. A 10 kt contour interval was selected. This example shows a 110 to 130 kt jet maximum near the base of a trough in the southeastern portion of the network.

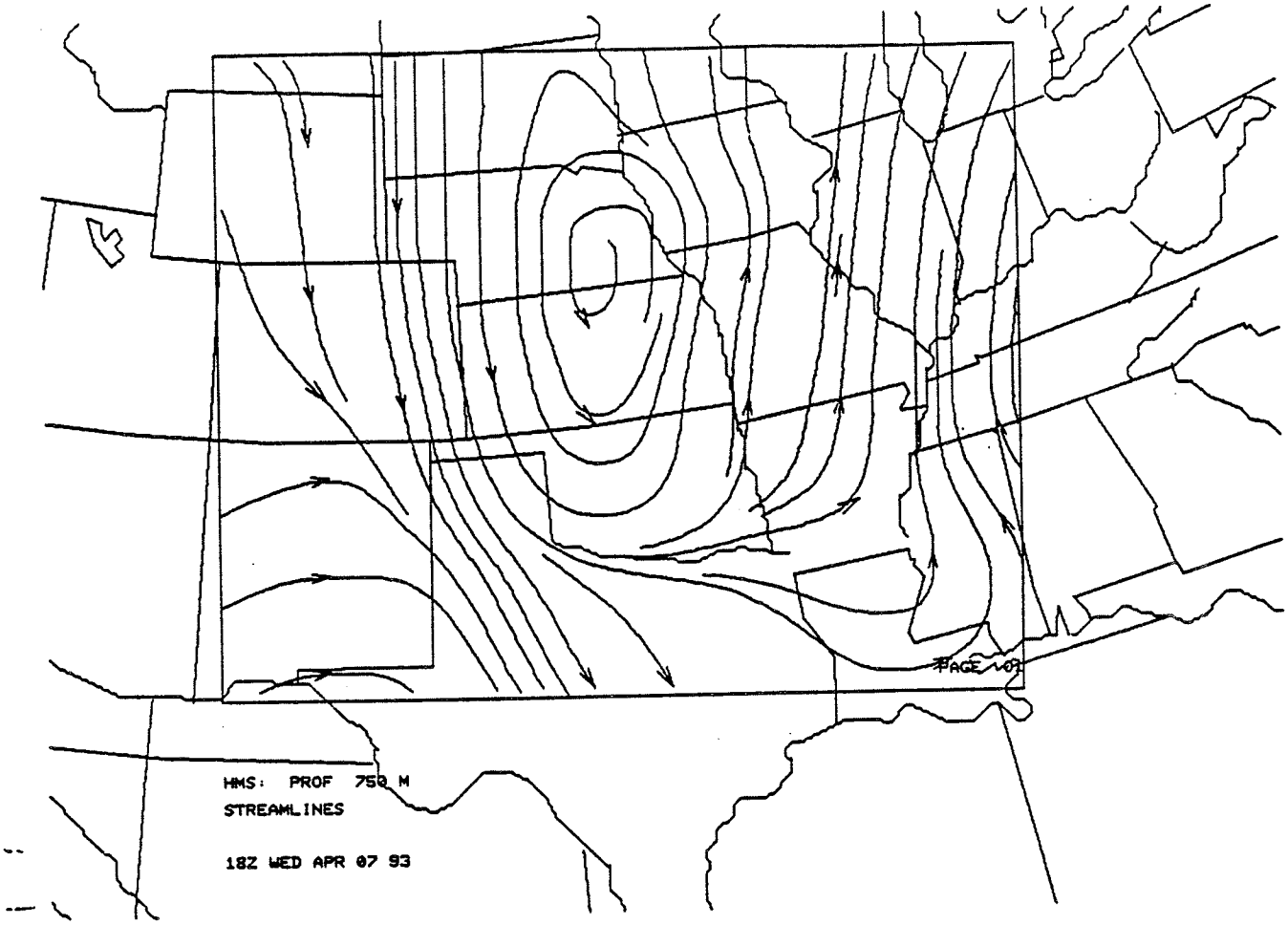

Figure 35. Sample plan view display of streamlines at the 750 m level at 1800 UTC. The streamline pattern indicates the circulation around a closed low in southeastern Nebraska.

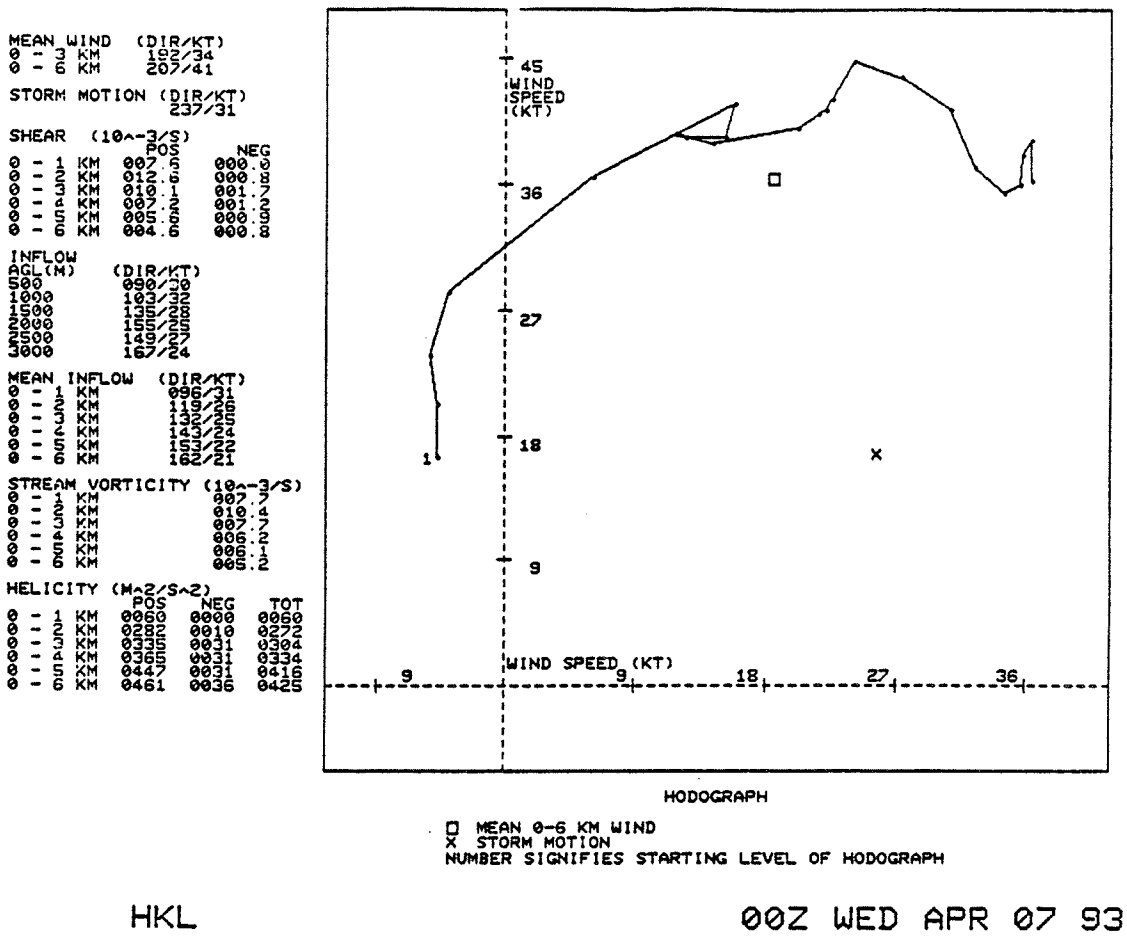

Figure 36. Sample hodograph display for Haskell, OK, at 0000 UTC. The hodograph pattern indicates that the winds generally veered and increased with height in the lower portion of the atmosphere. The storm motion was calculated by default at 75% of the mean speed of this layer, and 30° to the right. The very high helicity values, which exceeded 300 m^2/s^2 at 3 km and above indicate that in the presence of favorable thermodynamics, the atmospheric dynamics support convective development capable of producing severe weather, including tornadoes.

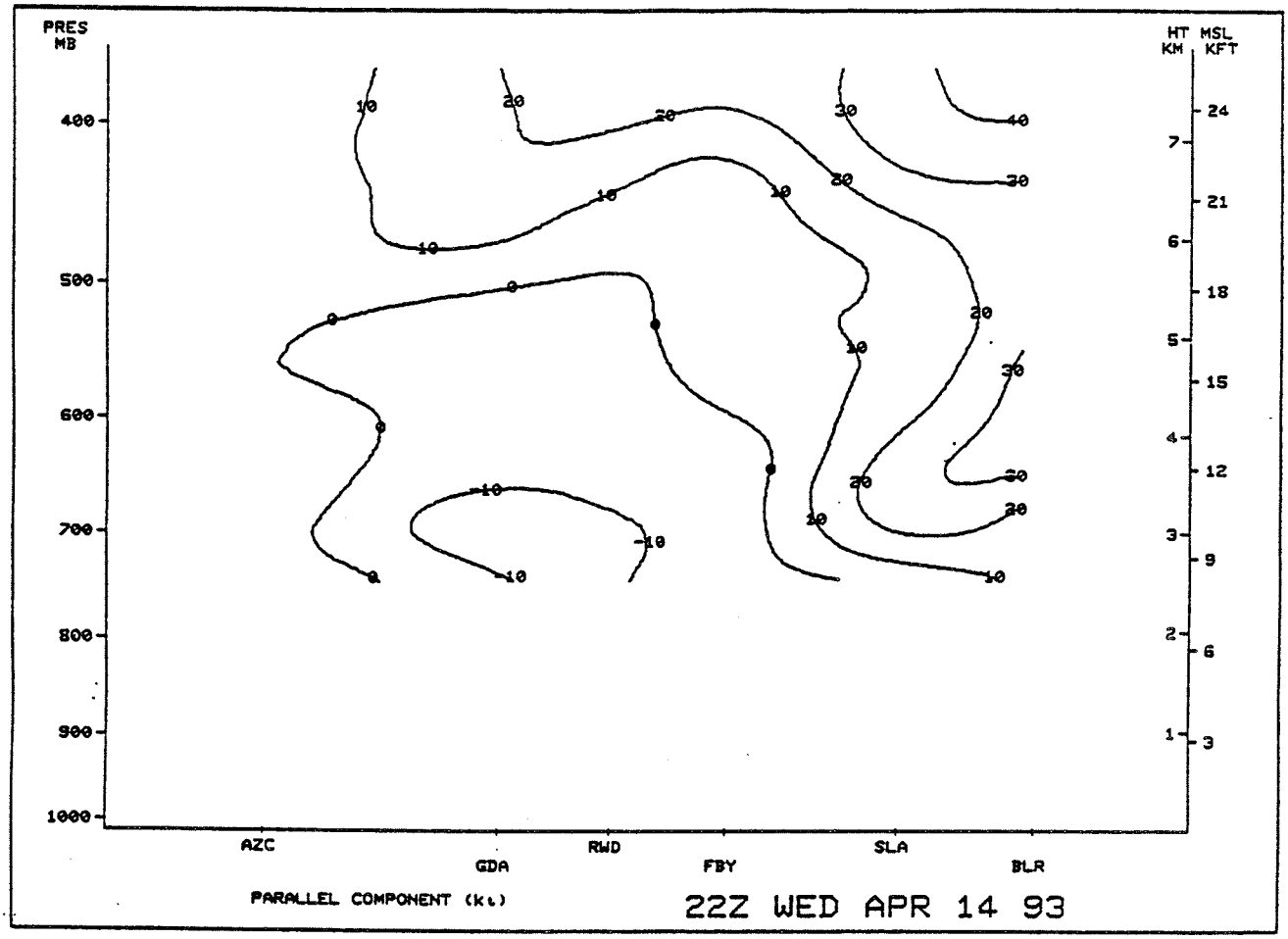

Figure 37. Sample cross section display of the wind component parallel to the plane of the cross section for Aztec, NM, Grenada, CO, McCook, NE, Fairbury, NE, Slater, IA, and Blue River, WI at 2200 UTC. Other options include a base height of MSL, and a contour interval of 10 kt. This example shows that the strongest component of the winds parallel (from the southwest) to the plane of this southwest-to-northeast cross section were found at the higher levels and in the northeasterly portion of the network. In the lowest levels in the southwesterly portion of the cross section, the wind component parallel to the plane of the cross section was weak and from the opposite direction (northeast).

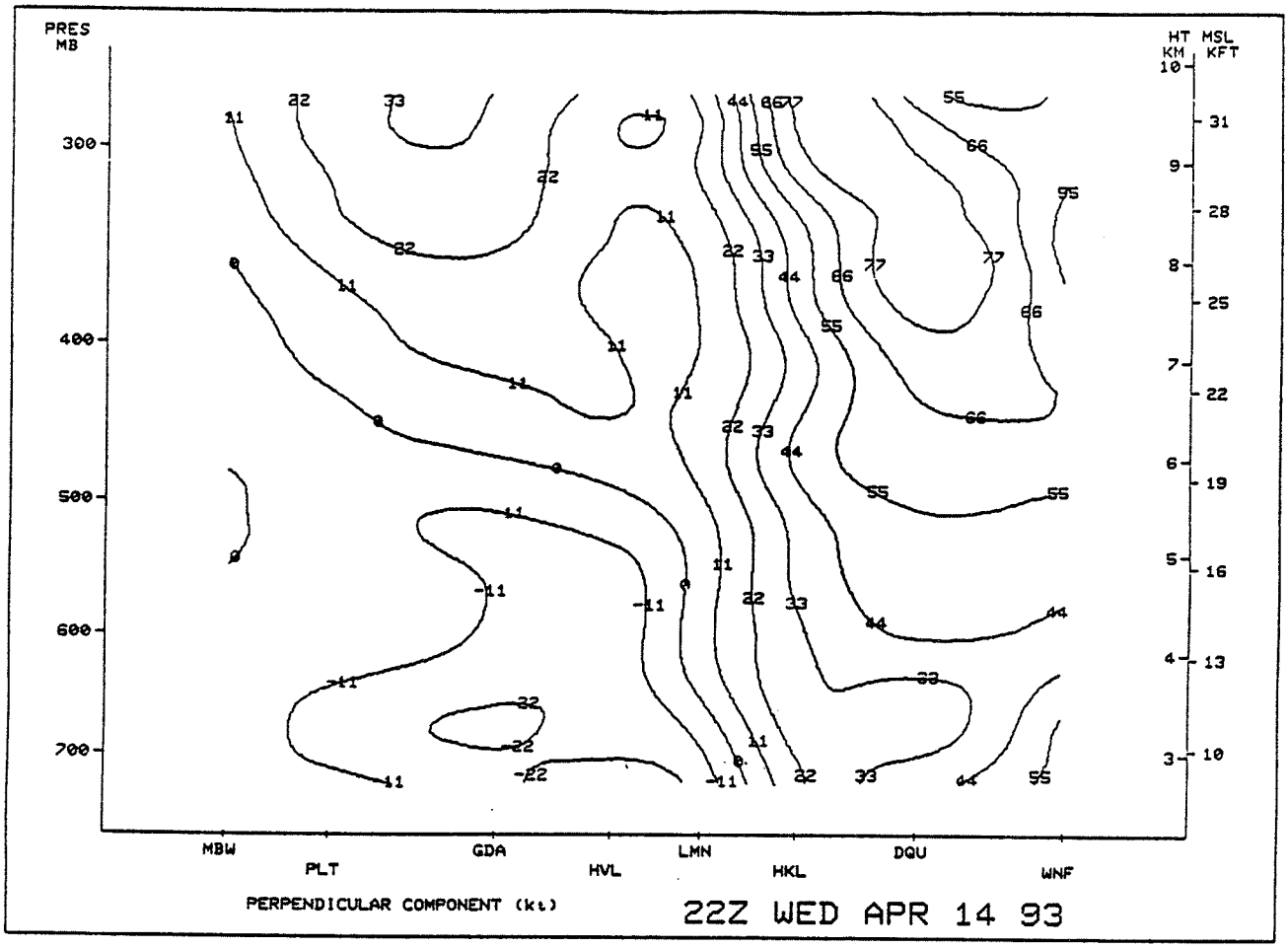

Figure 38. Sample cross section display of the wind component perpendicular to the plane of the cross section for Medicine Bow, WY, Platteville, CO, Grenada, CO, Haviland, KS, Lamont, OK, Haskell, OK, DeQueen, AR, and Winnfield, LA. Other options include a base height of 2200 m, and a contour interval of 11 kt. Since the cross section is aligned from northwest to southeast, this example shows a strong southwestly component, expecially at higher levels, across the plane of the cross section at the southeastern sites. Much weaker northeasterly flow exists at lower levels at the northwestern sites.

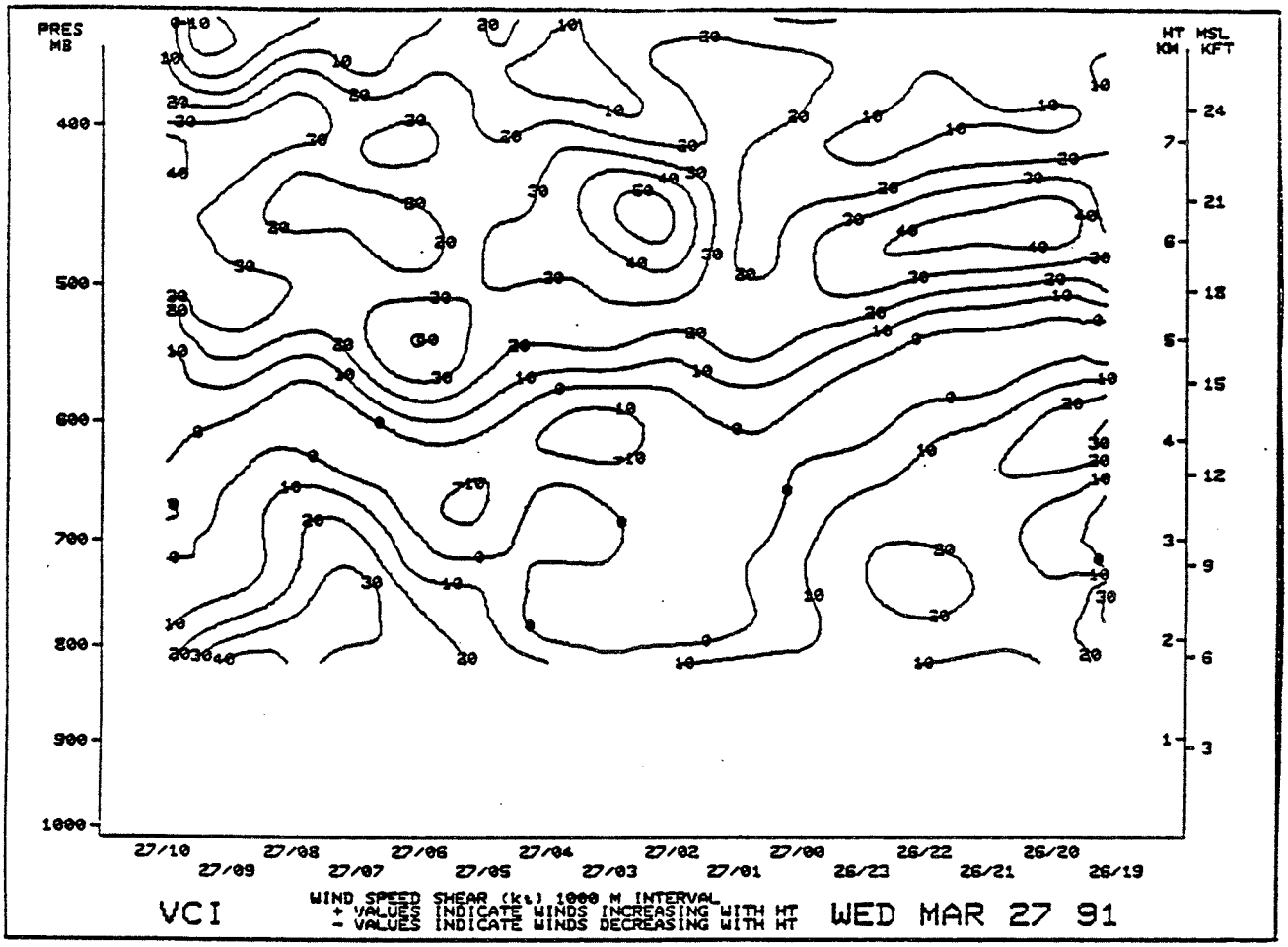

Figure 39. Sample time section display of the wind speed shear from Vici, OK. Other options include a base height of MSL, 16 hours of data, ending at 1000 UTC, a contour interval of 10 kt, and a height interval of 1000 m. In this example, notice that at around 0300 UTC, there was very little change in speed with height in the lower atmosphere. However, in the higher layers, the wind increased rapidly with height.

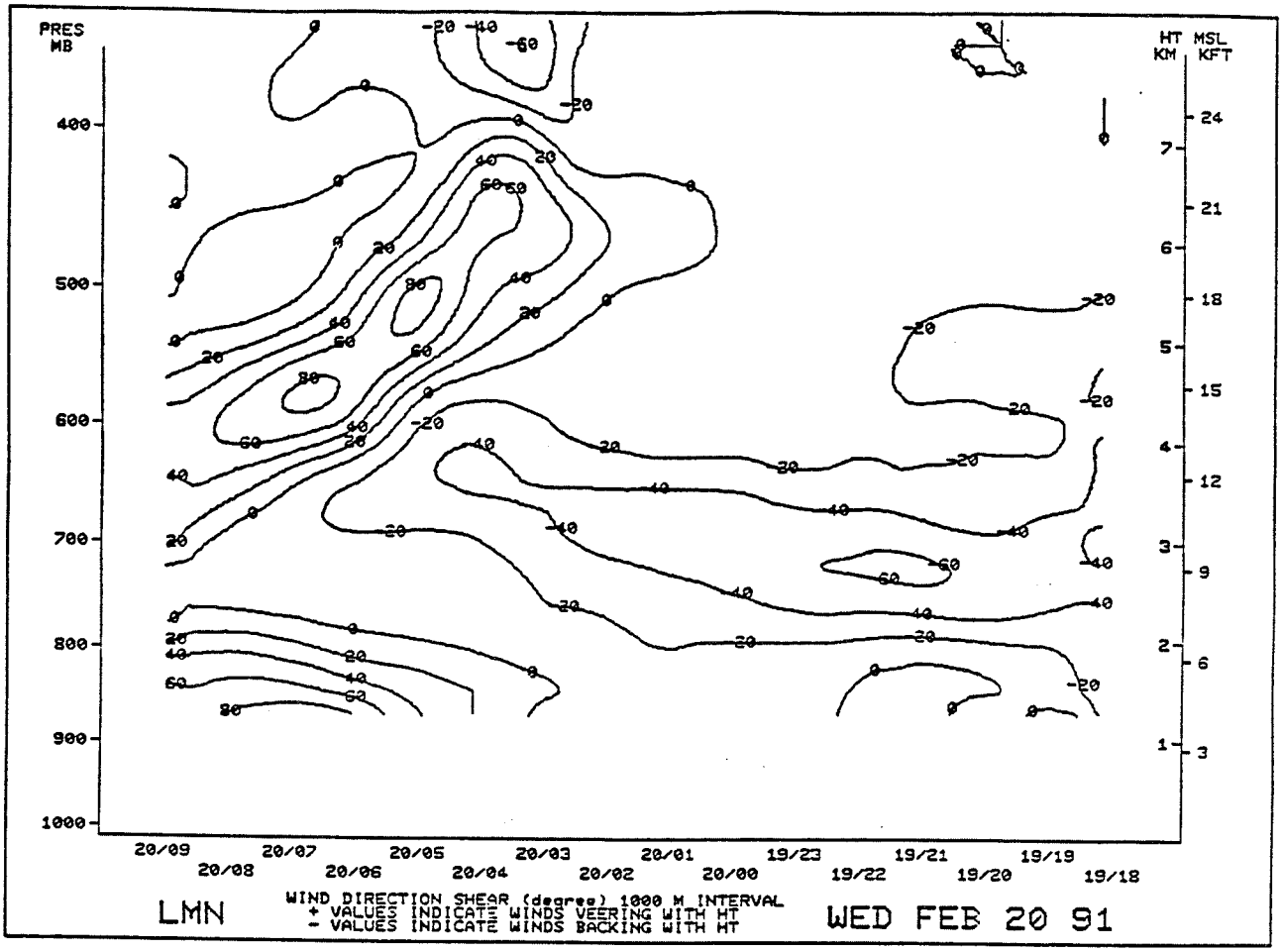

Figure 40. Sample time section display of the wind direction shear from Lamont, OK. Other options include a base height of MSL, 16 hours of data, ending at 0900 UTC, a contour interval of 20°, and a height interval of 1000 m. Notice that in this example, the winds were backing with height early in the period, but later in the period, the winds were veering with height, and in some layers, the veering was quite strong.

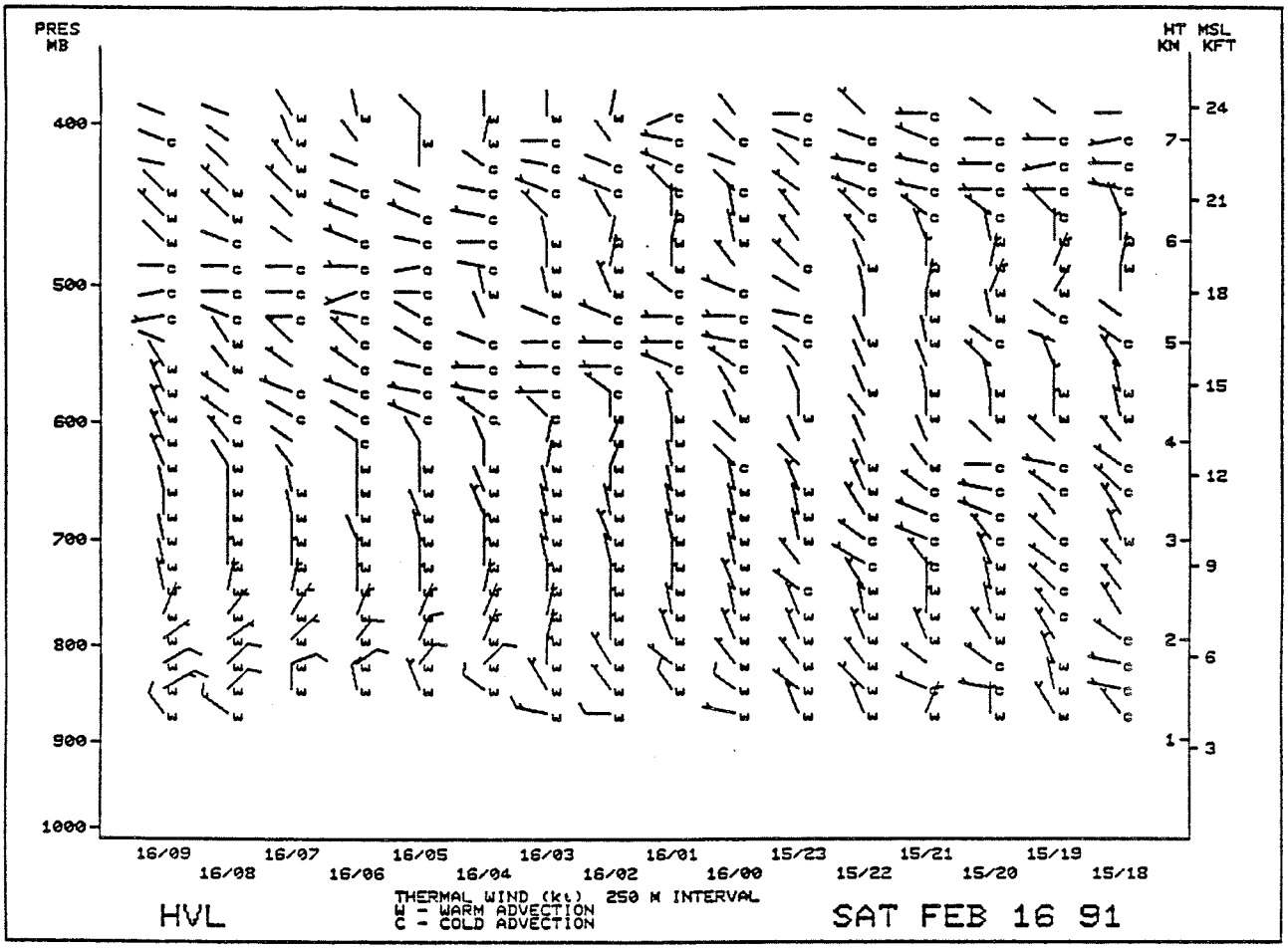

Figure 41. Sample time section display of the thermal wind for Haviland, KS. Other options include a base height of MSL, 16 hours of data, ending at 0900 UTC, and a height interval of 250 m. In general, the lower layers below 600 mb were marked by warm advection, with cold advection above. This combination of advections destabilizes the atmosphere.

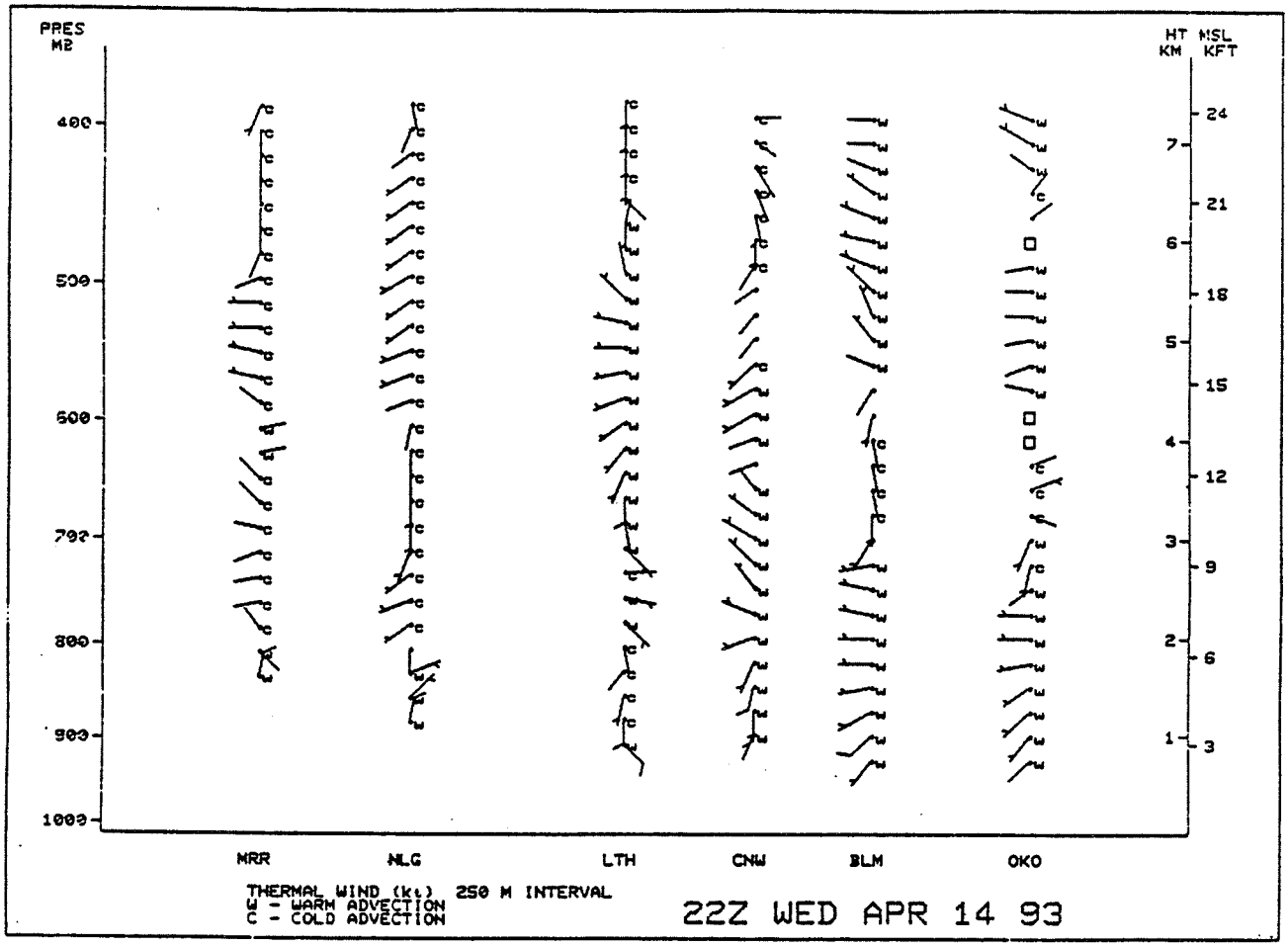

Figure 42. Sample cross section display of the thermal wind for Merriman, NE, Neligh, NE, Lathrop, MO, Conway, MO, Bloomfield, MO, and Okolona, MS at 2200 UTC. Other options include a base height of MSL, and a height interval of 250 m. This cross section cuts through two different air masses, with a front positioned between Neligh and Lathrop. Cold advection dominates the two sites to the northwest, while warm advection dominates the sites to the southeast.

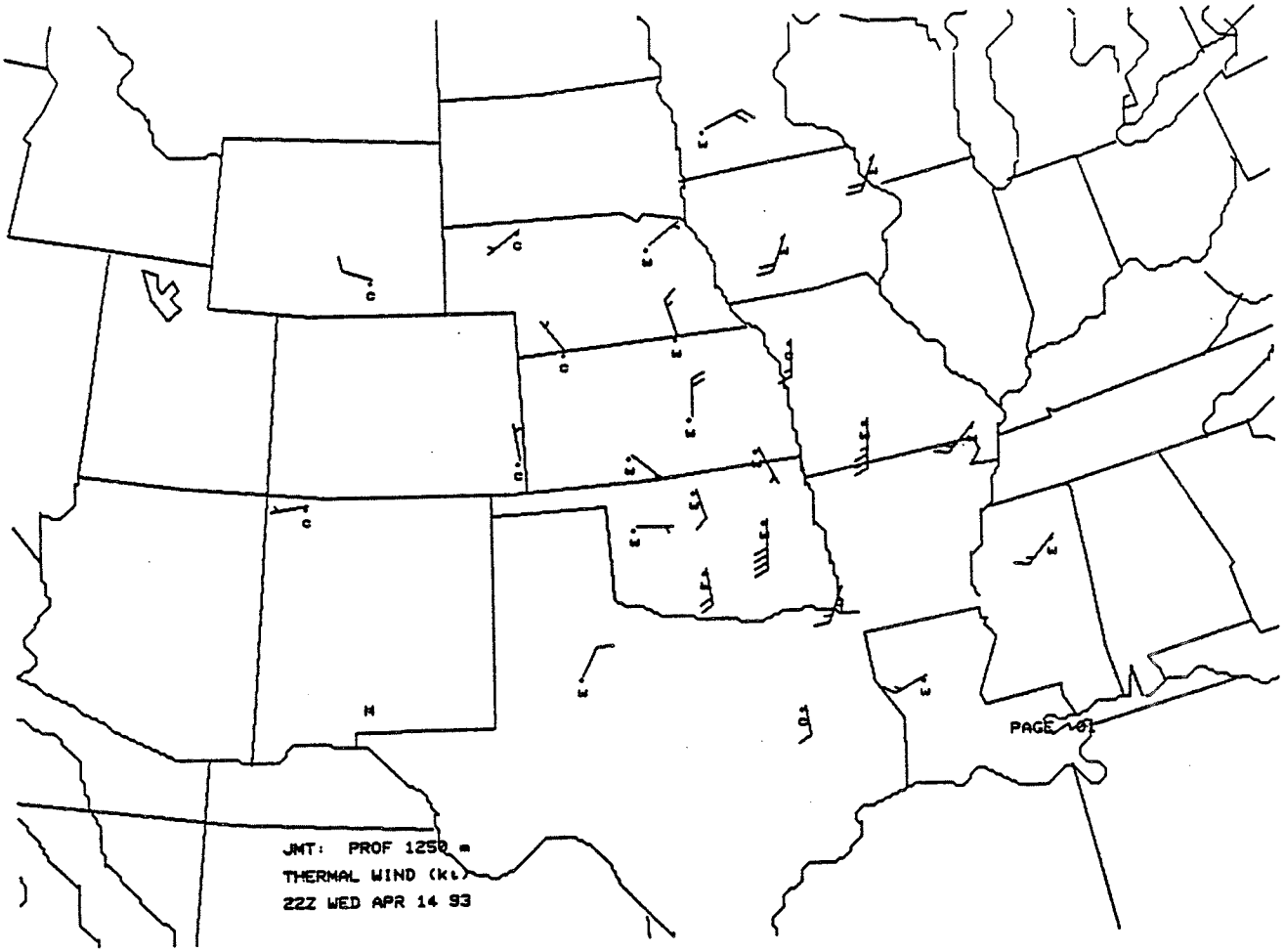

Figure 43. Sample plan view display of the thermal wind at the 1250 m level at 2200 UTC. A height interval of 1000 m was selected. Warm advection dominated the eastern portion of the network, with cold advection in the west.

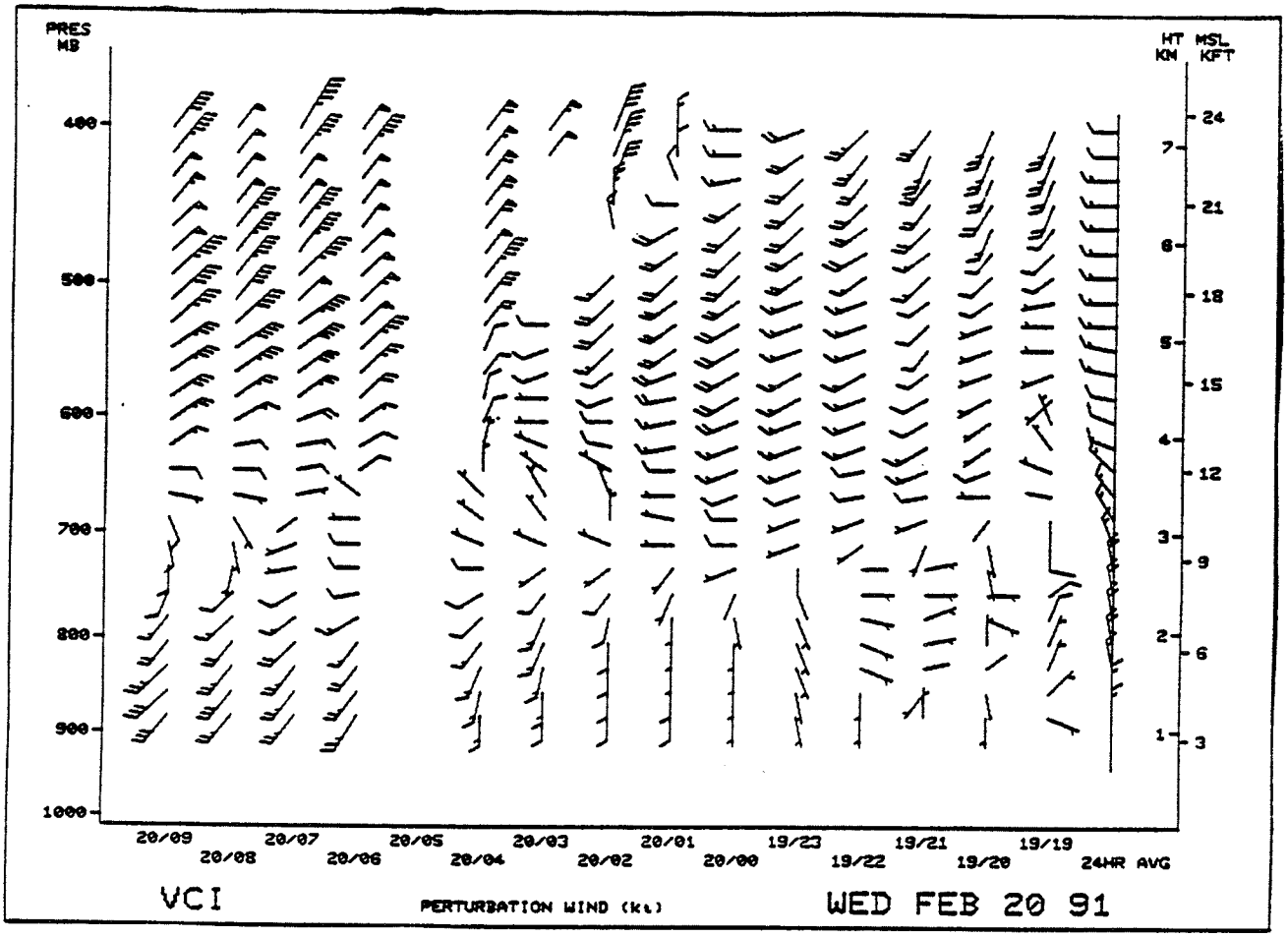

Figure 44. Sample time section display of the perturbation wind for Vici, OK. Other options include a base height of MSL, and 15 hours of data, ending at 0900 UTC. A strong northeasterly perturbation, signaling a change in air mass, first appeared at the highest levels by the middle of the period, and deepened to the lower layers by the end of the period.

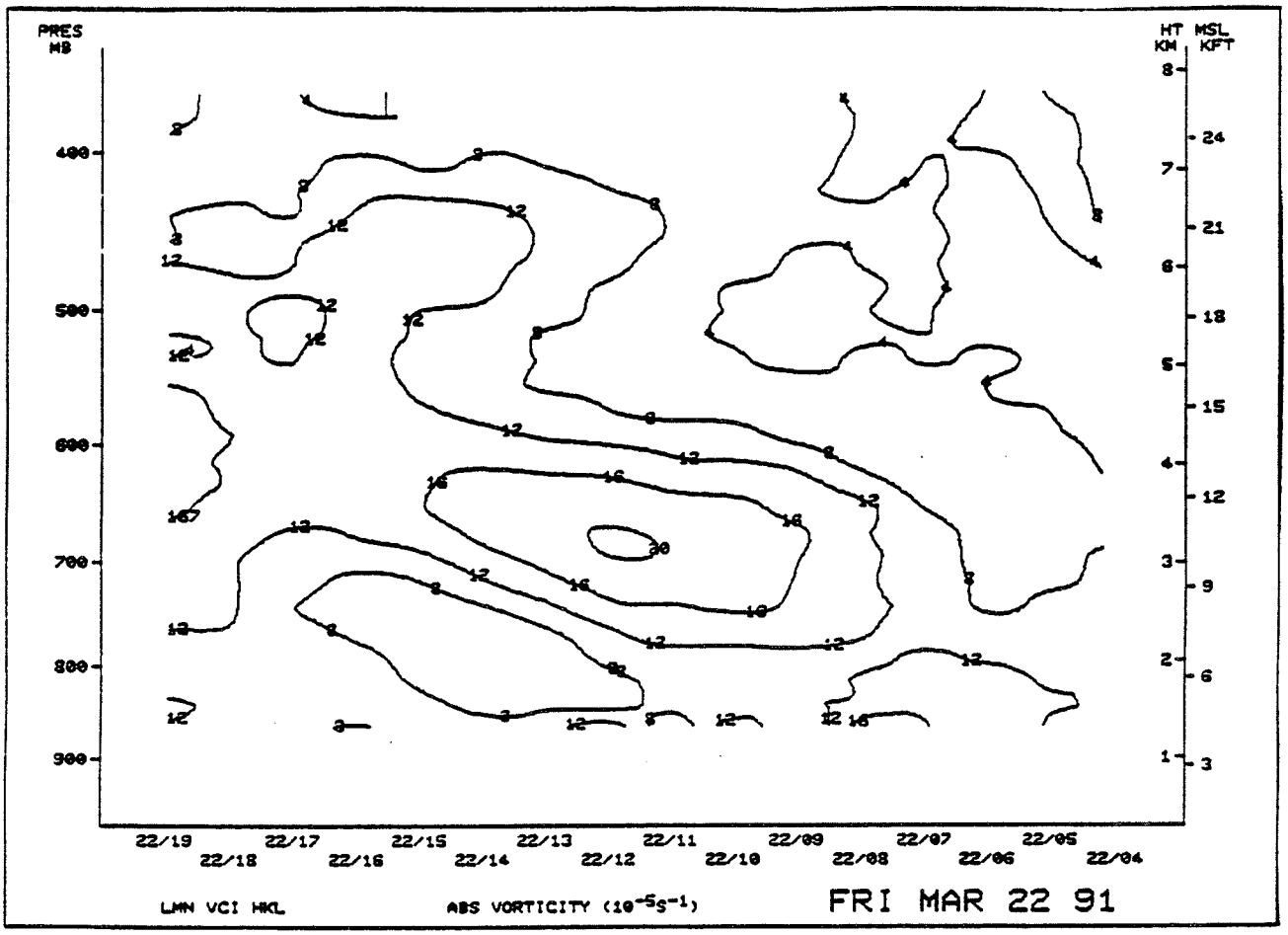

Figure 45. Sample time section display of absolute vorticity calculated from the centroid of the triangle defined by Lamont, OK, Vici, OK, and Haviland, KS. Other options include a base height of MSL, 16 hours of data ending at 1900 UTC, and a contour interval of .00004 s^{-1}. A 20-unit vorticity maximum moved into and out of the area during this period. This display shows positive vorticity advection, increasing with height. These conditions produce upward motion, which may result in precipitation, if sufficient moisture is present.

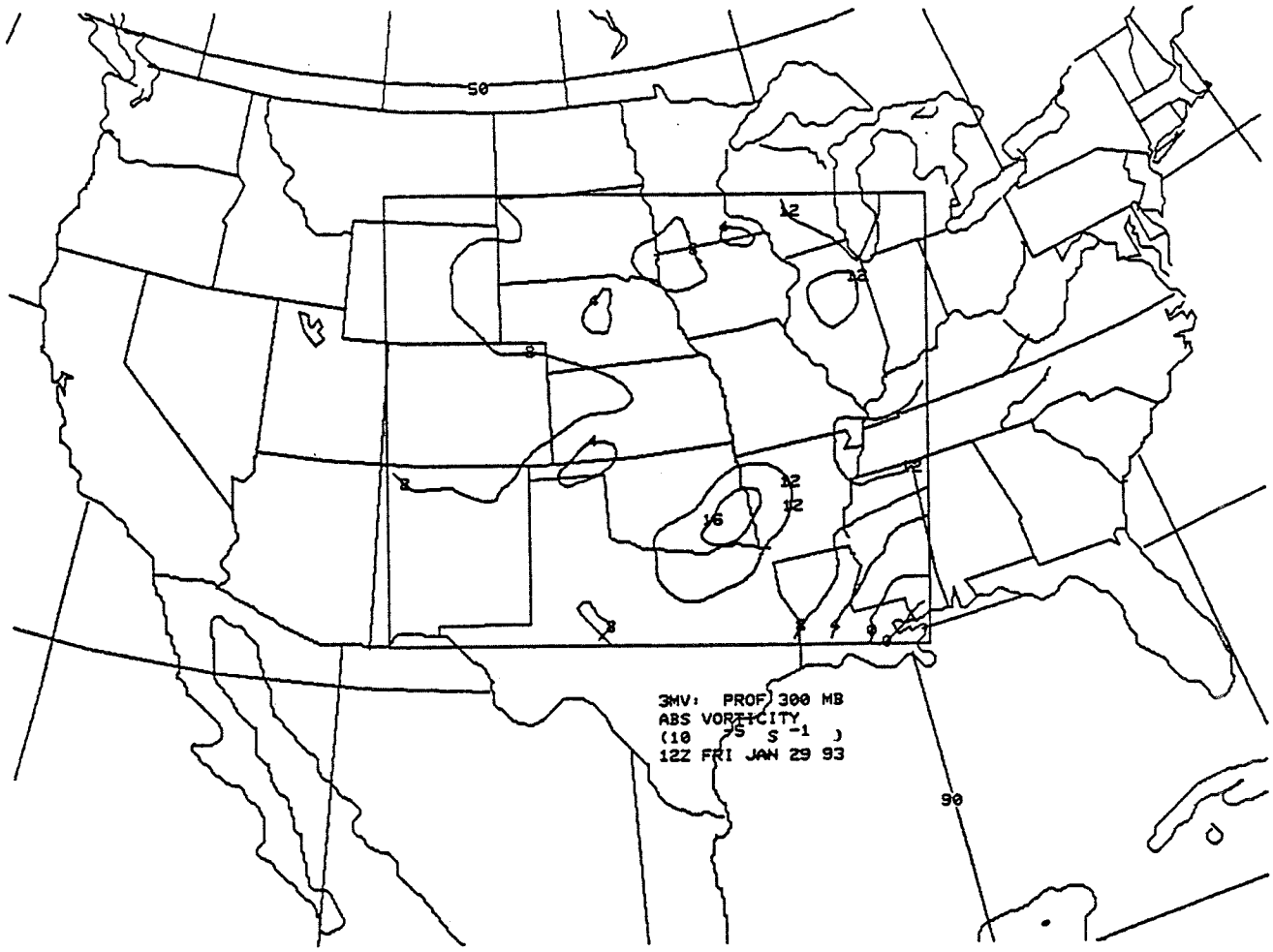

Figure 46. Sample plan view display of absolute vorticity at the 300 mb level at 1200 UTC. A .00004 s^{-1} contour interval was selected. This example shows a vorticity maximum located in southeastern Oklahoma.

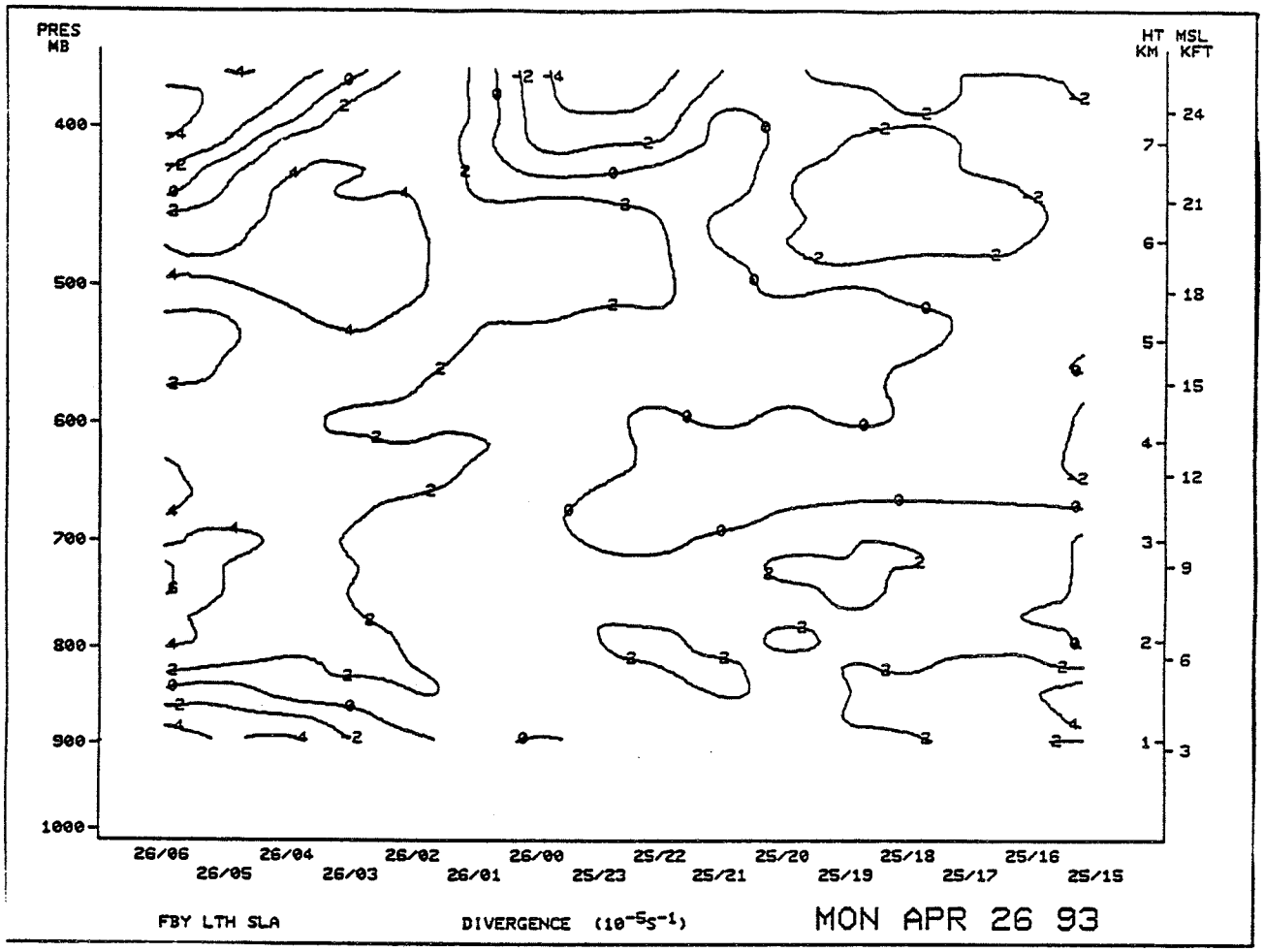

Figure 47. Sample time section display of divergence from the centroid of the triangle defined by Fairbury, NE, Lathrop, MO, and Slater, IA. Other options include a base height of MSL, 16 hours of data ending at 0600 UTC, and a contour interval of .00002 s^{-1}. In this example, convergence was indicated at the highest levels during the time period, while divergence was generally present in the lowest layers. This combination is unfavorable for precipitation.

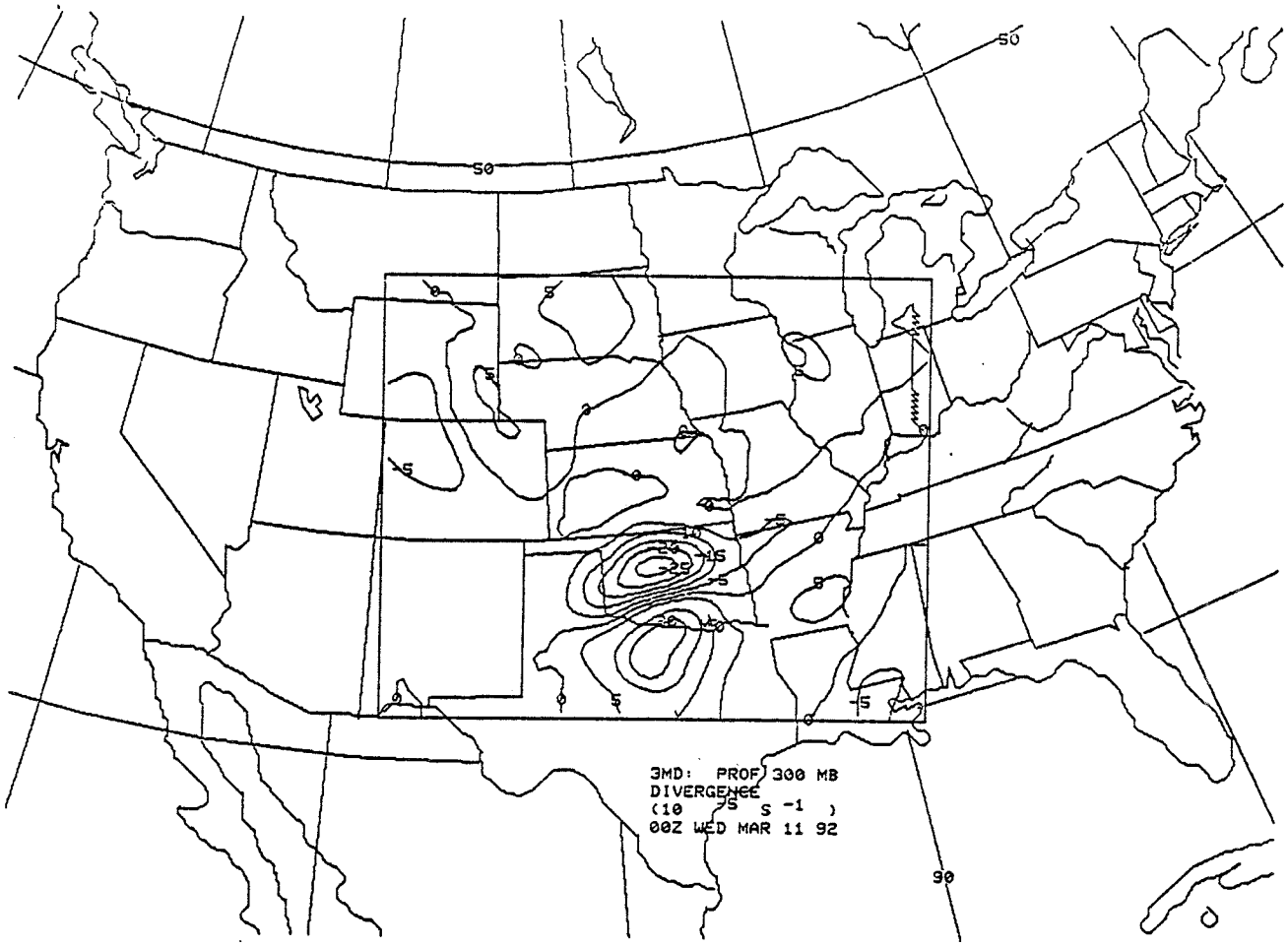

Figure 48. Sample plan view display of divergence at the 300 mb level at 0000 UTC. A .00005 s^{-1} contour interval was selected. The display shows a strong convergent area in central Oklahoma and a strong divergent area in north central Texas. The convergent area was located in the left entrance region of a jet streak maximum located in south central Oklahoma, and the divergent area was located in the right entrance region. Strong convergence at 300 mb produces downward motion, and strong divergence at this level produces upward motion, conducive to precipitation.

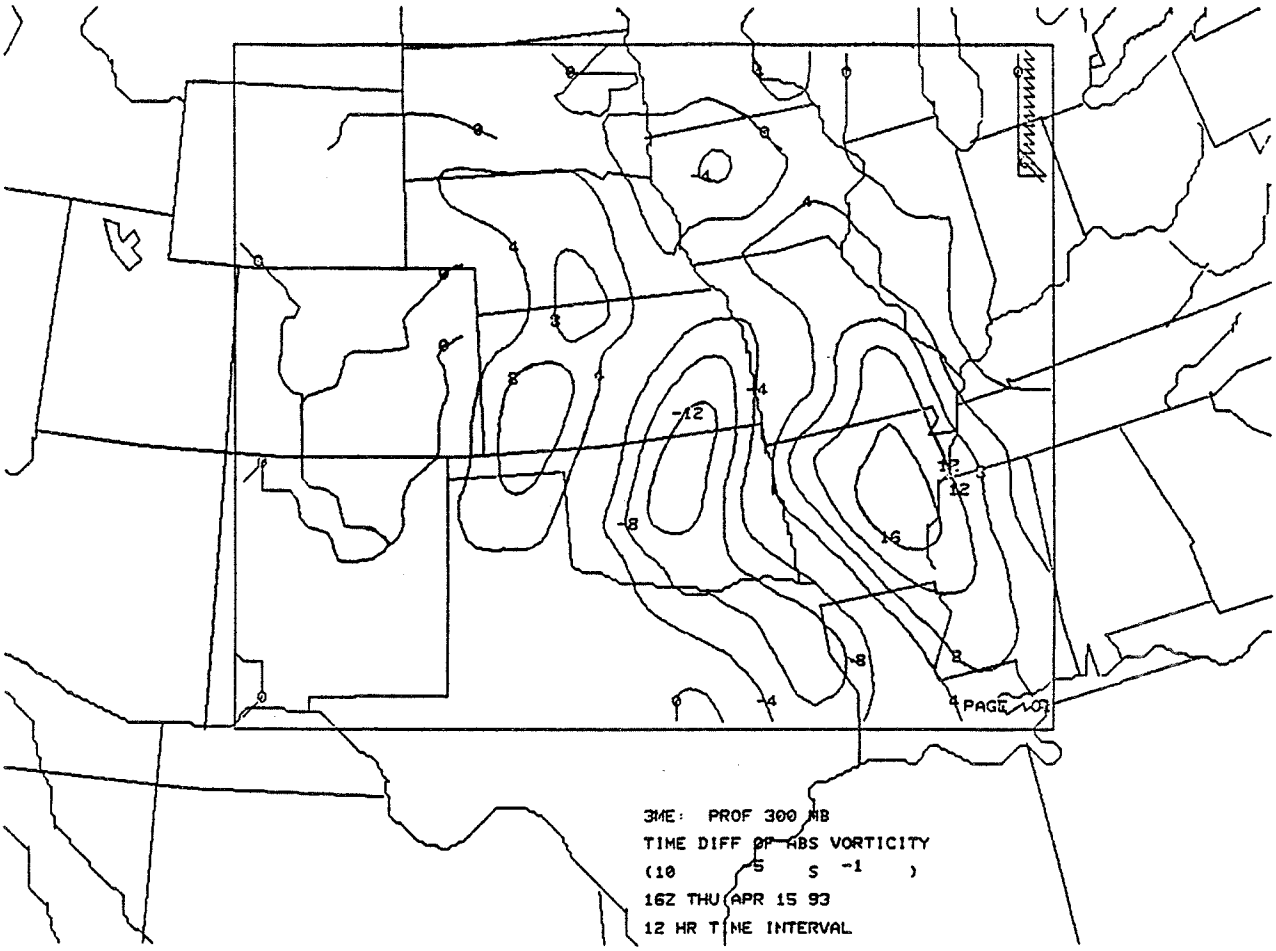

Figure 49. Sample plan view display of the time difference of absolute vorticity at the 300 mb level at 1600 UTC. A .00004 s^{-1} contour interval was selected, with a time difference of 12 hours. An increase in absolute vorticity in Arkansas, and a decrease in Oklahoma was calculated from the wind field, as an upper level trough moved eastward.

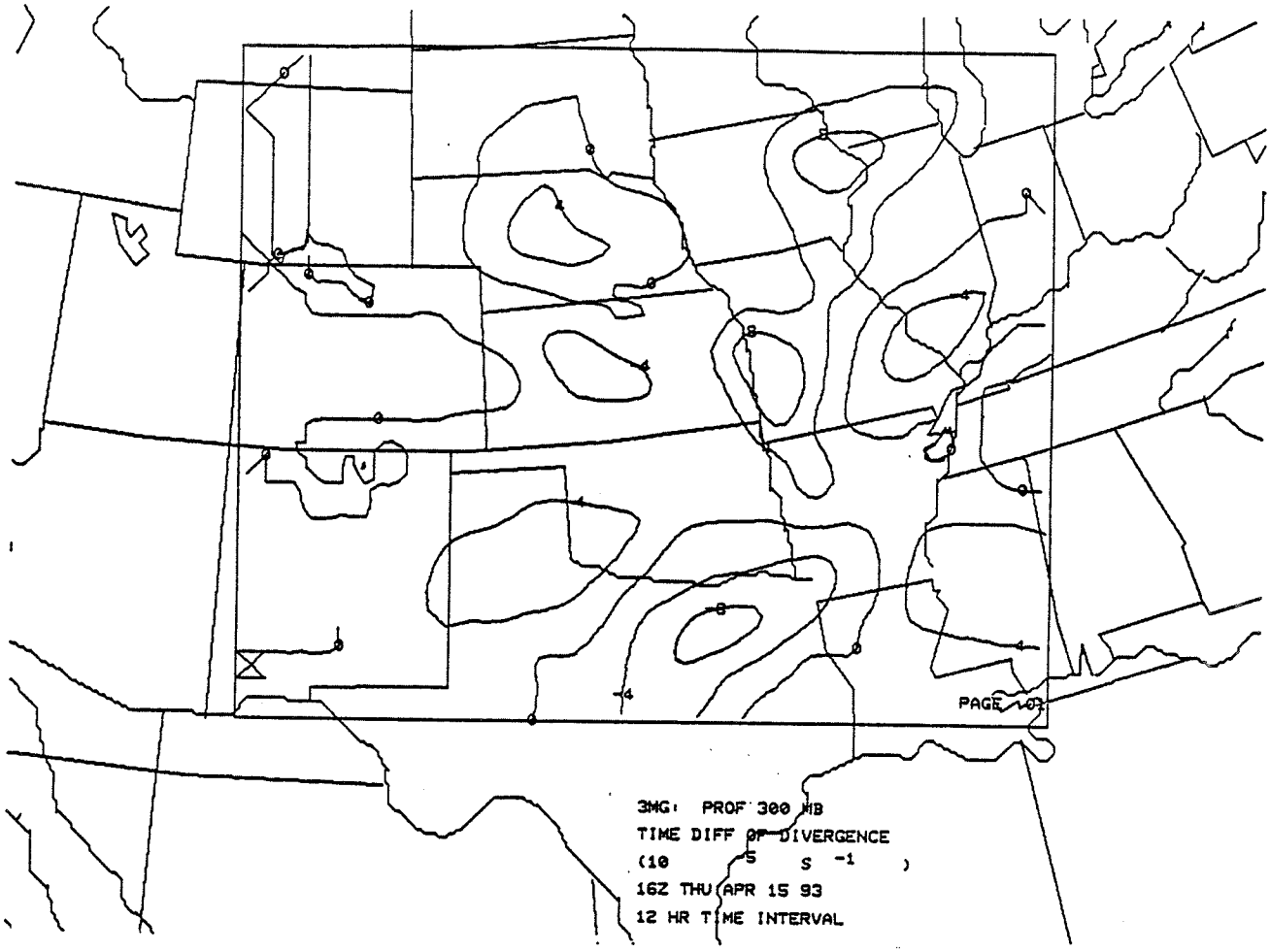

Figure 50. Sample plan view display of the time difference of divergence at the 300 mb level at 1600 UTC. A .00004 s^{-1} contour interval, and a 12-hour time interval was selected. This example shows that during the 12-hour period, convergence increased over northeastern Texas, while divergence increased from southwestern Wisconsin to southwestern Missouri. In the increasingly convergent area, precipitation was being suppressed, while in the divergent area, upward motion and possibly precipitation was being enhanced.

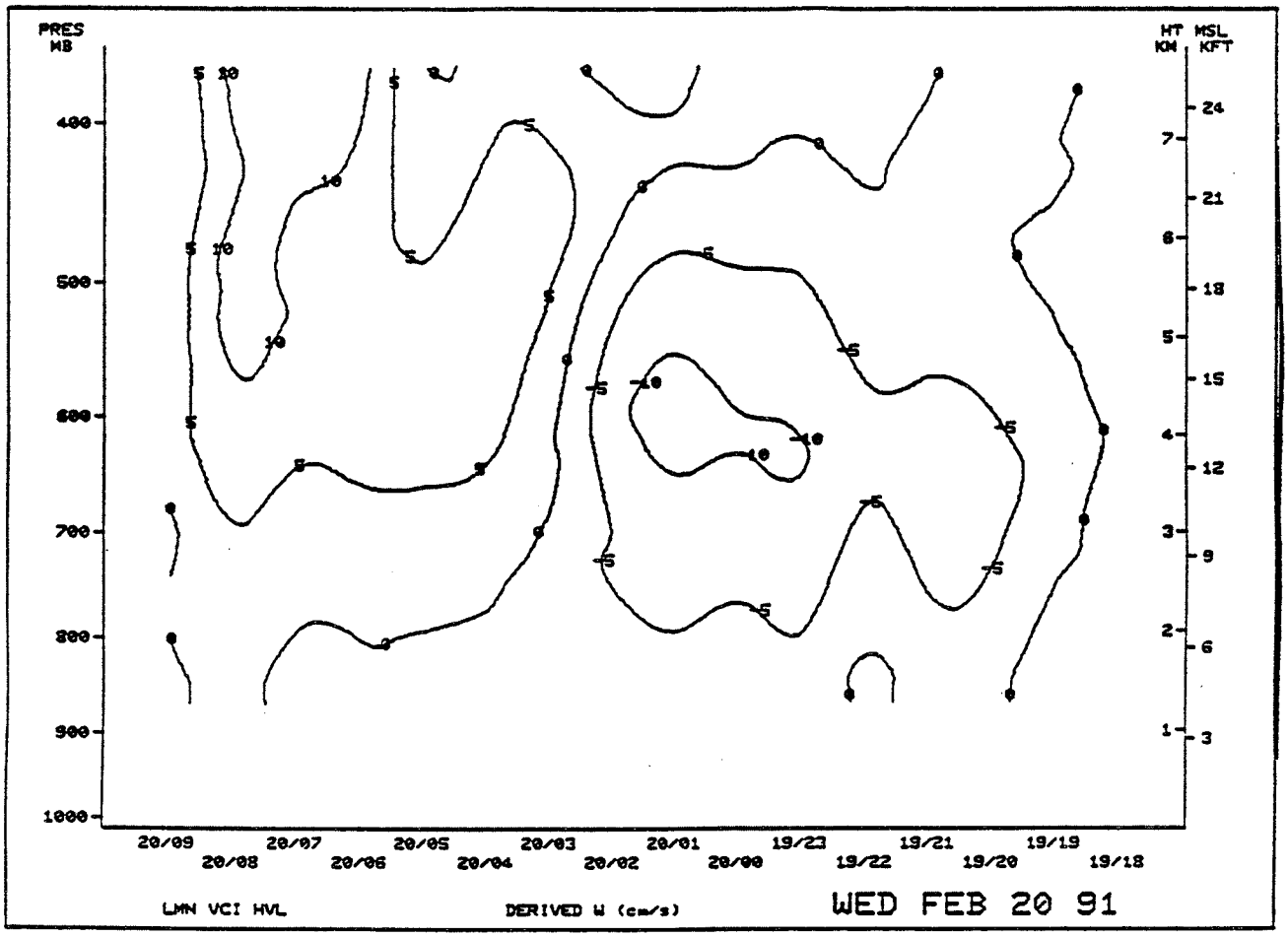

Figure 51. Sample time section display of the derived w-component of the wind from the centroid of the triangle defined by Lamont, OK, Vici, OK, and Haviland, KS. Other options include a base height of MSL, 16 hours of data ending at 0900 UTC, and a contour interval of 5 cm/s. Notice that sinking motion early in the period gave way to rising motion later in the period. Rising motion is favorable for precipitation.

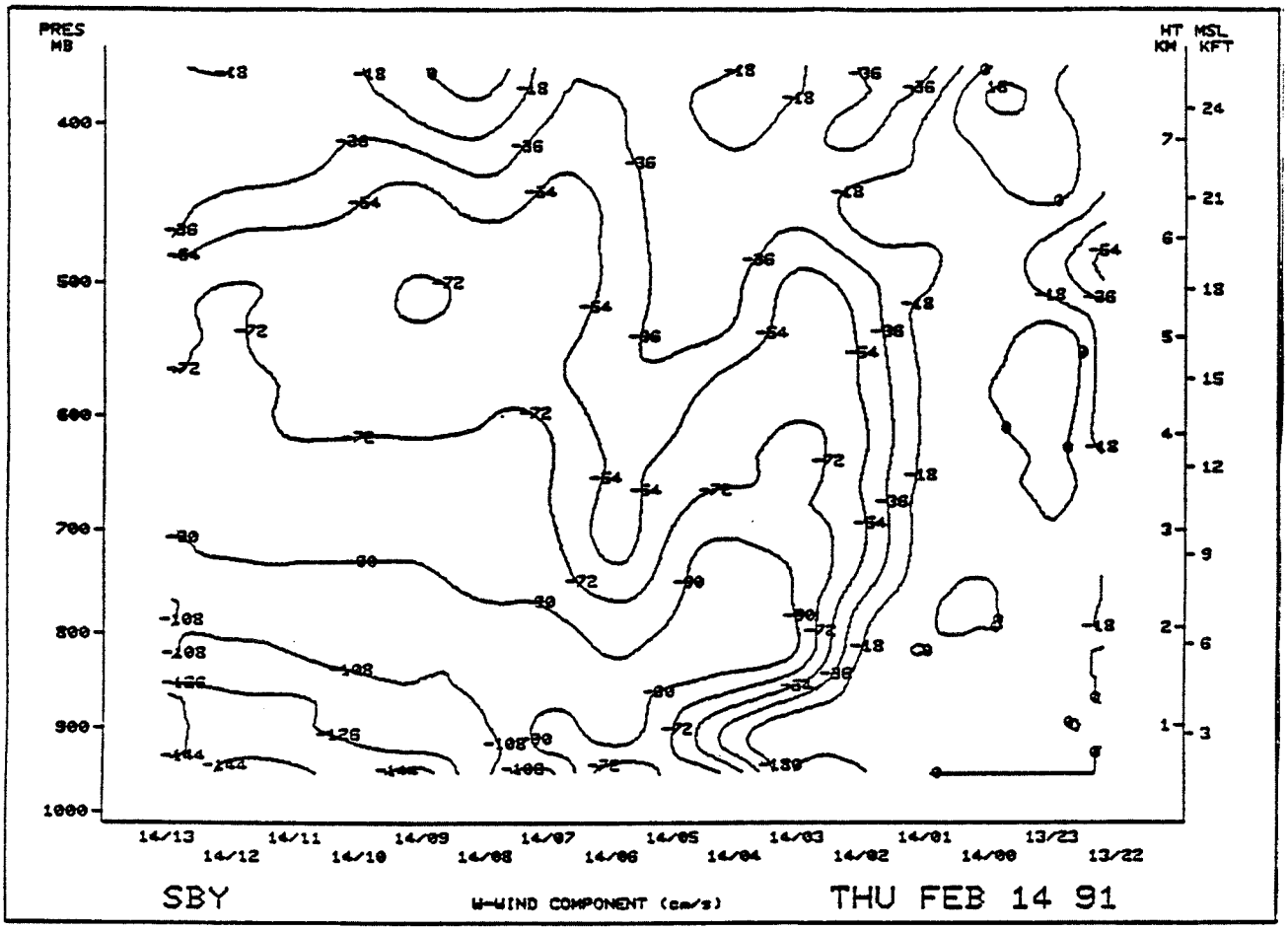

Figure 52. Sample time section display of the w-component of the wind from Sudbury, MA. Other options include a base height of MSL, 16 hours of data ending at 1300 UTC, and a contour interval of 18 cm/s. Additional meteorological information was necessary to interpret this display. Precipitation contaminated the upward motion, and appears as negative values on this display. Snow, which began aloft at around 0100 UTC, reached the surface at around 0300 UTC. The atmosphere was warmed, and by 0700 UTC, the snow melted near the surface. Since rain falls faster than snow, rain appears on the plot as larger negative values. In time, the melting occurred at increasingly higher levels.

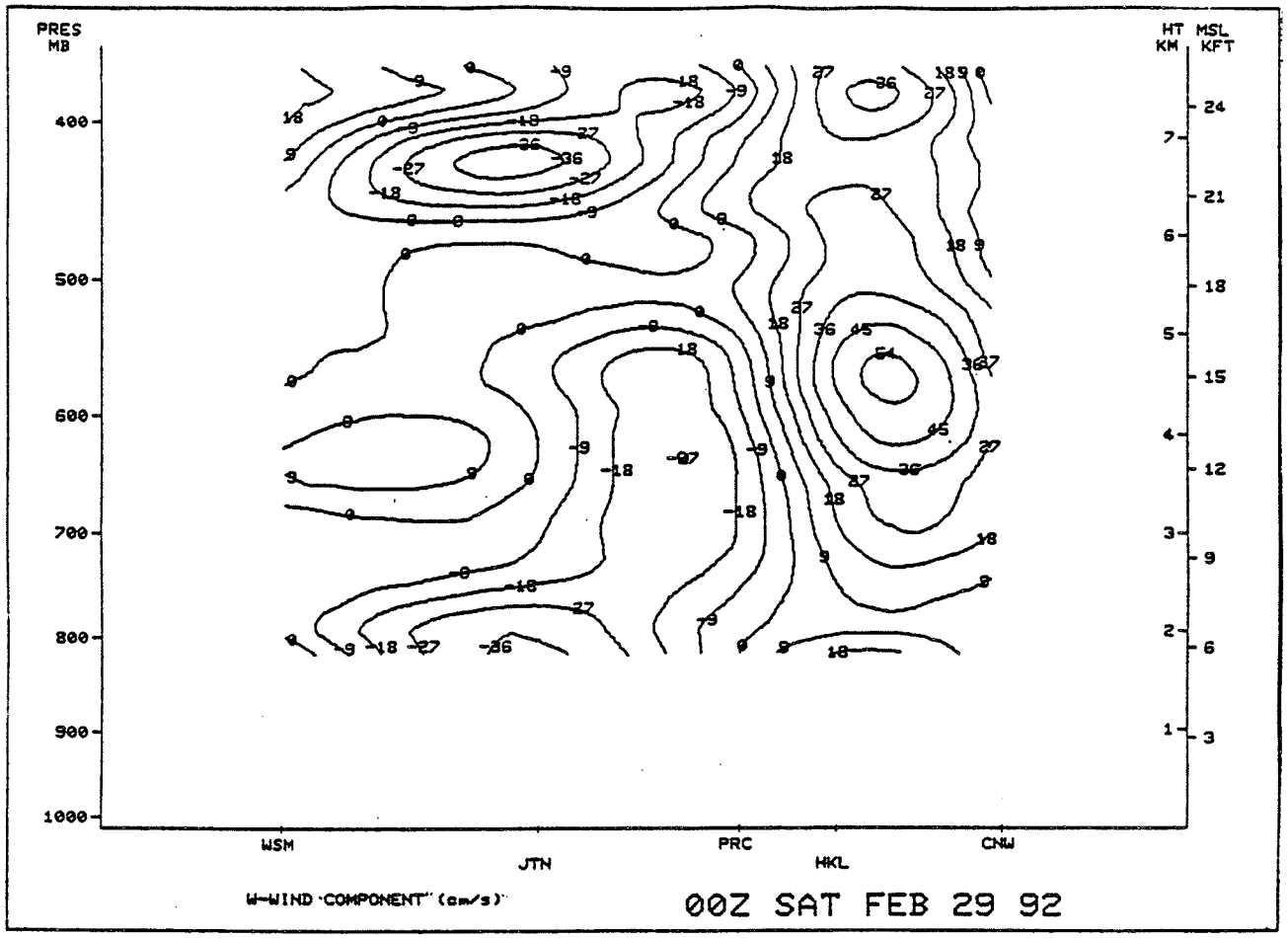

Figure 53. Sample cross section display of the w-component of the wind from White Sands, NM, Jayton, TX, Purcell, OK, Haskell, OK, and Conway, MO at 0000 UTC. Other options include a base height of MSL, and a contour interval of 9 cm/s. Upward vertical motion was present in the eastern portion of the region, with downward motion in the western portion.

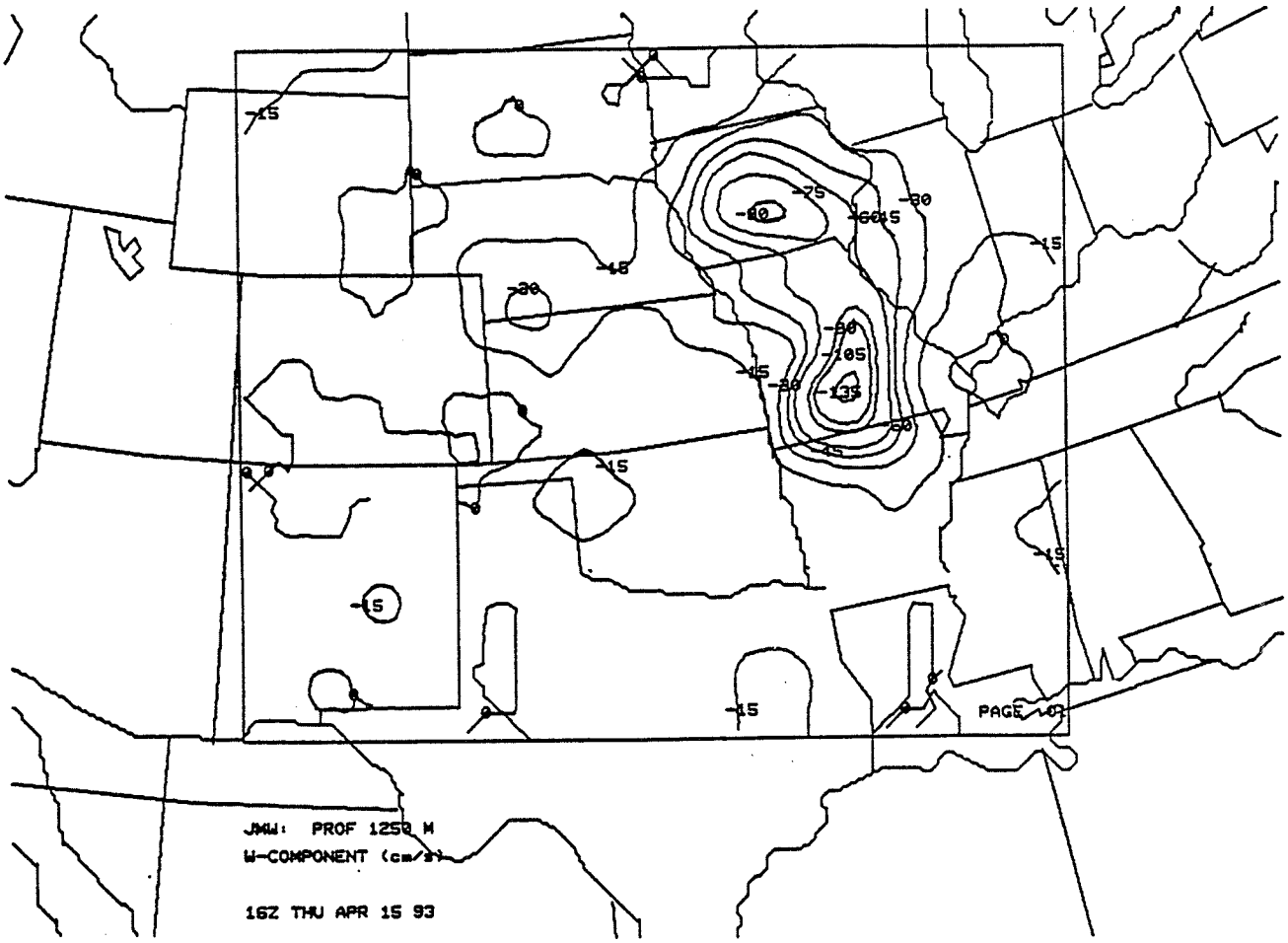

Figure 54. Sample plan view display of the w-component of the wind at the 1250 m level at 1600 UTC. A 15 cm/s contour interval was selected. Downward vertical motion was present throughout most of the profiler network, but the downward motion was strongest in Missouri and Iowa.

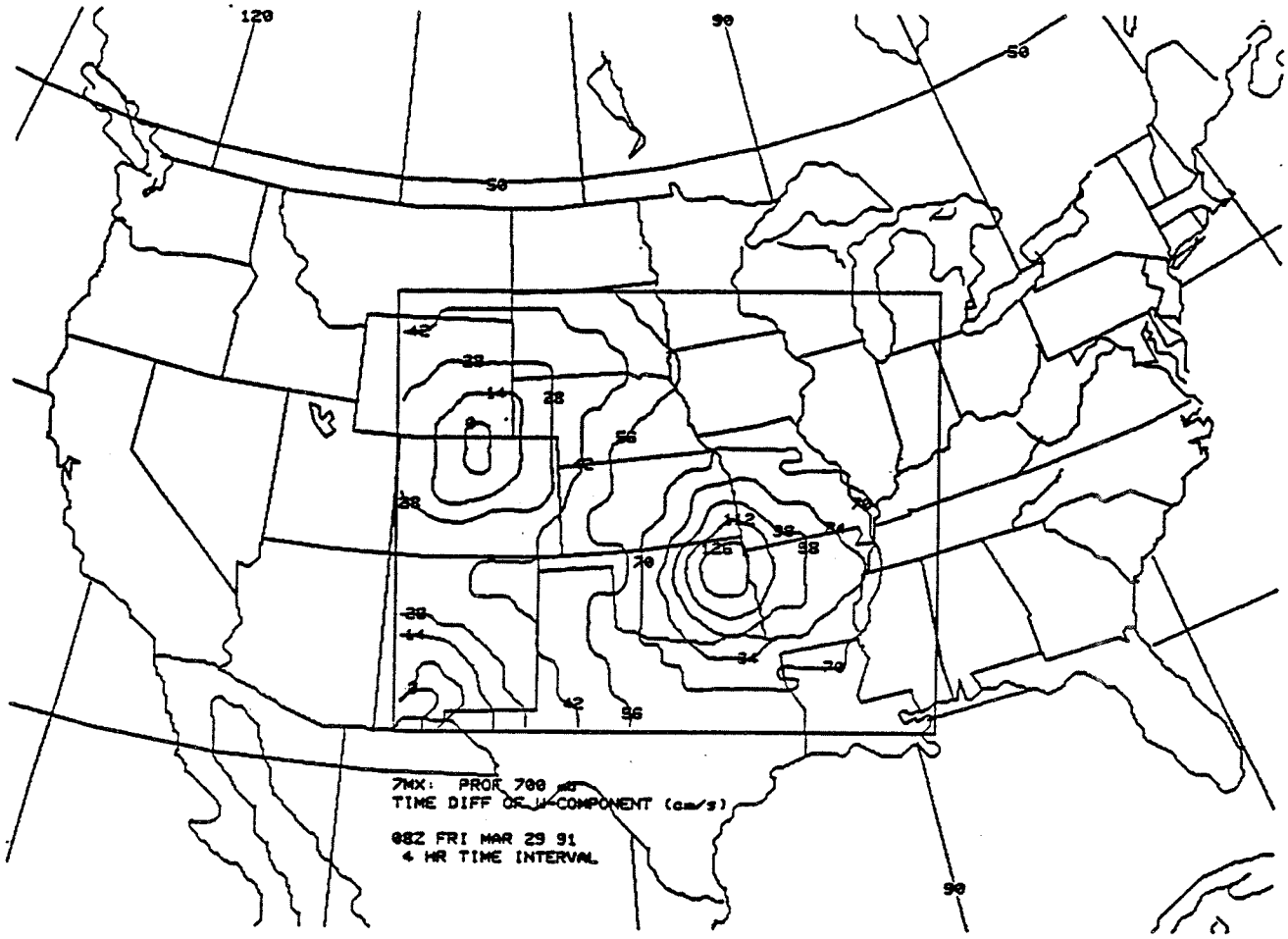

Figure 55. Sample plan view display of the time difference of the w-component of the wind at the 700 mb level at 0800 UTC. A 14 cm/s contour interval was selected. Throughout most of the network, the upward component of the wind increased during the 4-hour period.

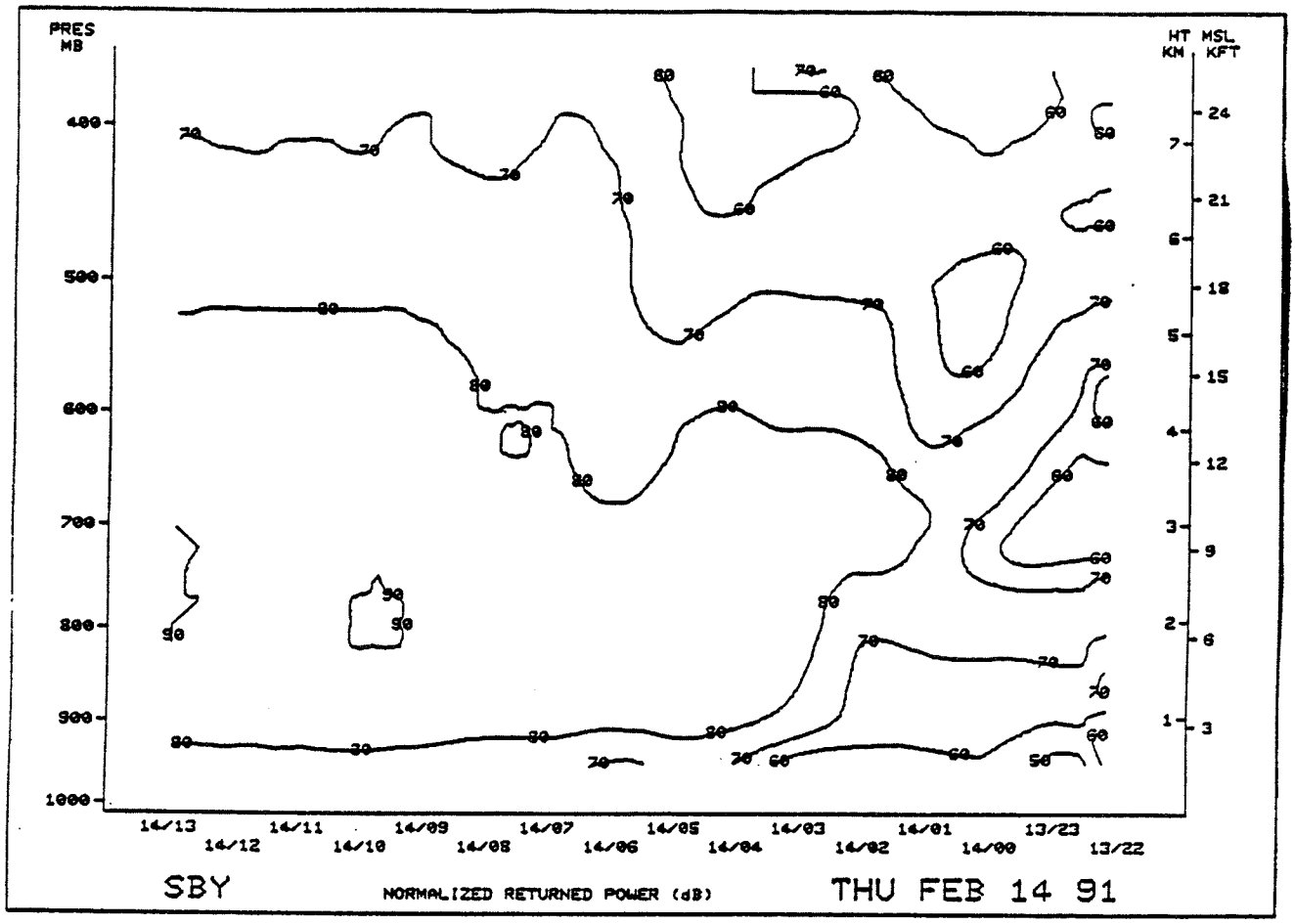

Figure 56. Sample time section display of normalized returned power from Sudbury, MA. Other options include a base height of MSL, 16 hours of data ending at 1300 UTC, and a contour interval of 10 dB. An increase in a profiler returned power signal indicates an increase in turbulence or moisture. In this case, the 80 dB returns indicated that precipitation was aloft at around 0100 UTC, foreshadowing the precipitation which was observed at the surface at around 0300 UTC.

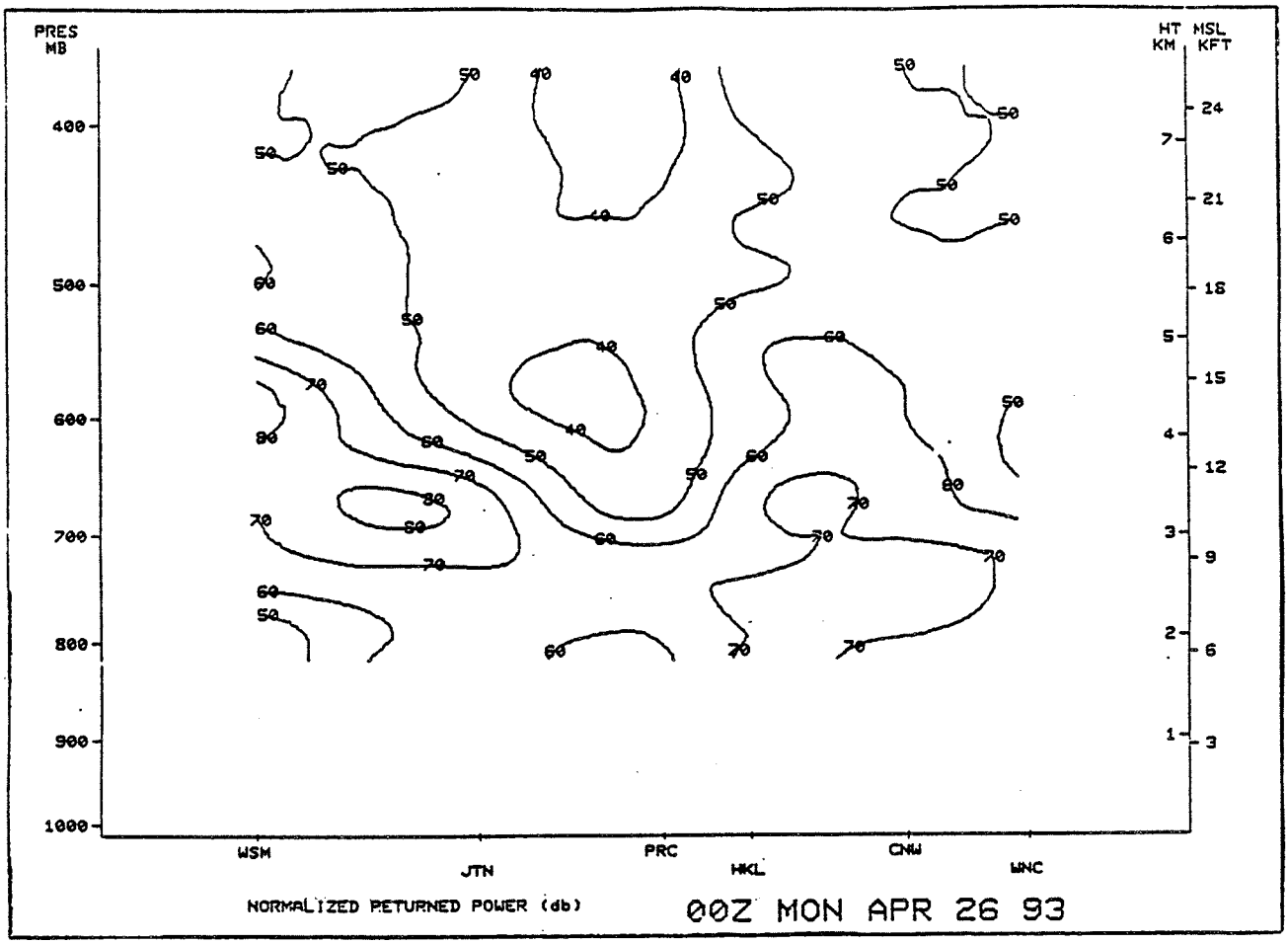

Figure 57. Sample cross section display of normalized returned power from White Sands, NM, Jayton, TX, Purcell, OK, Haskell, OK, Conway, MO, and Winchester, IL at 0000 UTC. Other options include a base height of MSL, and a contour interval of 10 dB. The returned power signal was weakest near the midpoint of the cross section, with stronger values on either side.

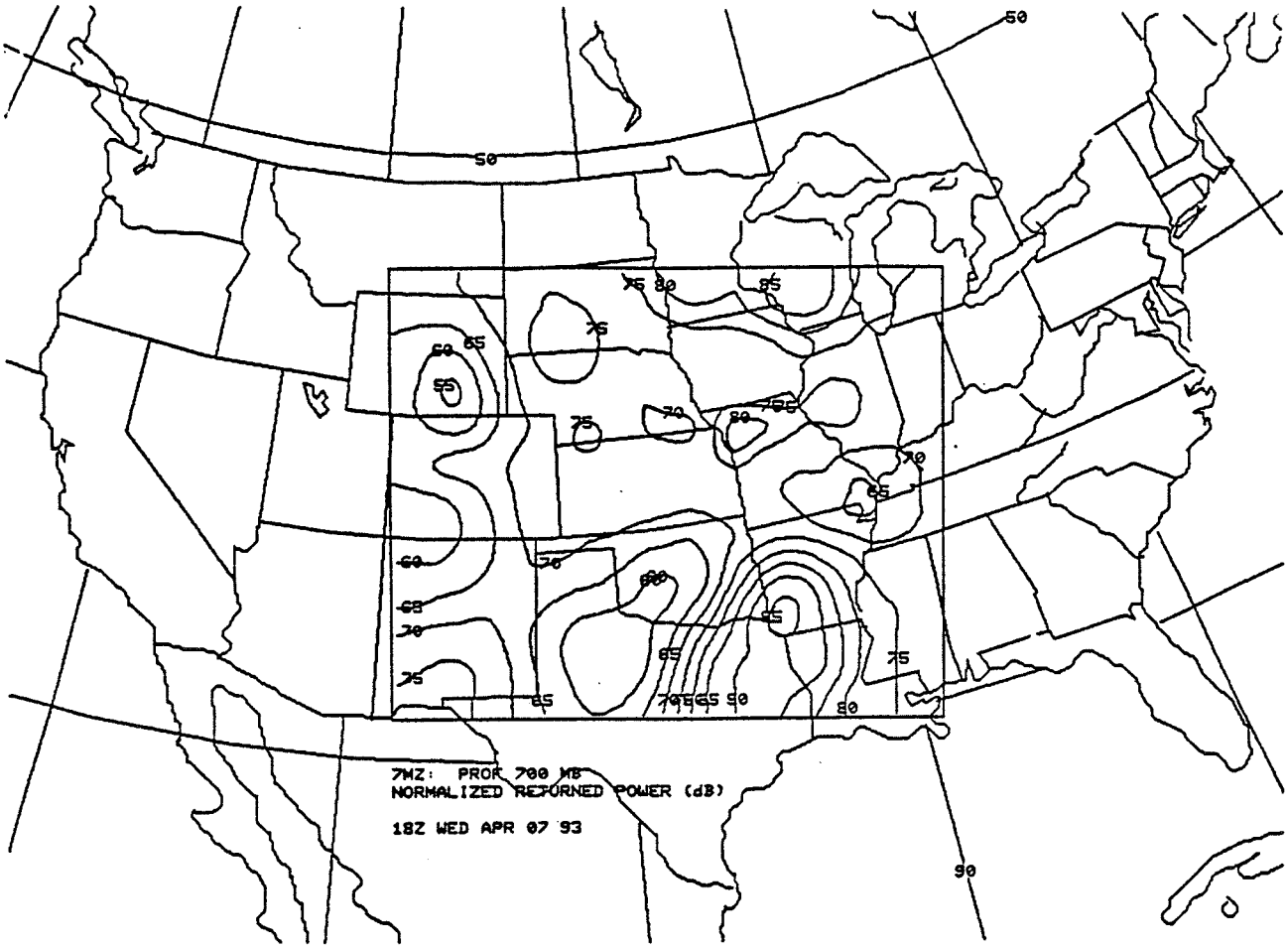

Figure 58. Sample plan view display of normalized returned power at the 700 mb level at 1800 UTC. A 5 dB contour interval was selected. The returned power signal was strongest in the moist air in the southeastern part of the network, and weakest in the drier air to the northwest.

10. APPENDIX - PRODUCT INVENTORY LIST

A. TIME SECTION PRODUCTS

Code	Description	Station
NMCGPHZA0	plotted winds	
NMCGPHZI0	u component of wind	
NMCGPHZJ0	v component of wind	
NMCGPHZK0	directional shear	
NMCGPHZL0	speed shear	
NMCGPHZP0	perturbation wind	Platteville
NMCGPHZT0	thermal wind	
NMCGPHZW0	measured vertical motion	
NMCGPHZY0	isotachs	
NMCGPHZZ0	returned power	
NMCGPHZA1	plotted winds	
NMCGPHZI1	u component of wind	
NMCGPHZJ1	v component of wind	
NMCGPHZK1	directional shear	
NMCGPHZL1	speed shear	
NMCGPHZP1	perturbation wind	Lathrop
NMCGPHZT1	thermal wind	
NMCGPHZW1	measured vertical motion	
NMCGPHZY1	isotachs	
NMCGPHZZ1	returned power	
NMCGPHZA2	plotted winds	
NMCGPHZI2	u component of wind	
NMCGPHZJ2	v component of wind	
NMCGPHZK2	directional shear	
NMCGPHZL2	speed shear	
NMCGPHZP2	perturbation wind	Fairbury
NMCGPHZT2	thermal wind	
NMCGPHZW2	measured vertical motion	
NMCGPHZY2	isotachs	
NMCGPHZZ2	returned power	
NMCGPHZA3	plotted winds	
NMCGPHZI3	u component of wind	
NMCGPHZJ3	v component of wind	
NMCGPHZK3	directional shear	
NMCGPHZL3	speed shear	
NMCGPHZP3	perturbation wind	Hillsboro
NMCGPHZT3	thermal wind	
NMCGPHZW3	measured vertical motion	
NMCGPHZY3	isotachs	
NMCGPHZZ3	returned power	
NMCGPHZA4	plotted winds	
NMCGPHZI4	u component of wind	
NMCGPHZJ4	v component of wind	White Sands
NMCGPHZK4	directional shear	
NMCGPHZL4	speed shear	

Code	Description	Station
NMCGPHZP4	perturbation wind	
NMCGPHZT4	thermal wind	
NMCGPHZW4	measured vertical motion	White Sands
NMCGPHZY4	isotachs	
NMCGPHZZ4	returned power	
NMCGPHZA5	plotted winds	
NMCGPHZI5	u component of wind	
NMCGPHZJ5	v component of wind	
NMCGPHZK5	directional shear	
NMCGPHZL5	speed shear	
NMCGPHZP5	perturbation wind	Haviland
NMCGPHZT5	thermal wind	
NMCGPHZW5	measured vertical motion	
NMCGPHZY5	isotachs	
NMCGPHZZ5	returned power	
NMCGPHZA6	plotted winds	
NMCGPHZI6	u component of wind	
NMCGPHZJ6	v component of wind	
NMCGPHZK6	directional shear	
NMCGPHZL6	speed shear	
NMCGPHZP6	perturbation wind	Neodesha
NMCGPHZT6	thermal wind	
NMCGPHZW6	measured vertical motion	
NMCGPHZY6	isotachs	
NMCGPHZZ6	returned power	
NMCGPHZA7	plotted winds	
NMCGPHZI7	u component of wind	
NMCGPHZJ7	v component of wind	
NMCGPHZK7	directional shear	
NMCGPHZL7	speed shear	
NMCGPHZP7	perturbation wind	Lamont
NMCGPHZT7	thermal wind	
NMCGPHZW7	measured vertical motion	
NMCGPHZY7	isotachs	
NMCGPHZZ7	returned power	
NMCGPHZA8	plotted winds	
NMCGPHZI8	u component of wind	
NMCGPHZJ8	v component of wind	
NMCGPHZK8	directional shear	
NMCGPHZL8	speed shear	
NMCGPHZP8	perturbation wind	Vici
NMCGPHZT8	thermal wind	
NMCGPHZW8	measured vertical motion	
NMCGPHZY8	isotachs	
NMCGPHZZ8	returned power	
NMCGPHZA9	plotted winds	
NMCGPHZI9	u component of wind	Haskell
NMCGPHZJ9	v component of wind	

Code	Description	Station
NMCGPHZK9	directional shear	
NMCGPHZL9	speed shear	
NMCGPHZP9	perturbation wind	
NMCGPHZT9	thermal wind	Haskell
NMCGPHZW9	measured vertical motion	
NMCGPHZY9	isotachs	
NMCGPHZZ9	returned power	
NMCGPHZAA	plotted winds	
NMCGPHZIA	u component of wind	
NMCGPHZJA	v component of wind	
NMCGPHZKA	directional shear	
NMCGPHZLA	speed shear	
NMCGPHZPA	perturbation wind	Purcell
NMCGPHZTA	thermal wind	
NMCGPHZWA	measured vertical motion	
NMCGPHZYA	isotachs	
NMCGPHZZA	returned power	
NMCGPHZAB	plotted winds	
NMCGPHZIB	u component of wind	
NMCGPHZJB	v component of wind	
NMCGPHZKB	directional shear	
NMCGPHZLB	speed shear	
NMCGPHZPB	perturbation wind	Conway
NMCGPHZTB	thermal wind	
NMCGPHZWB	measured vert motion	
NMCGPHZYB	isotachs	
NMCGPHZZB	returned power	
NMCGPHZAC	plotted winds	
NMCGPHZIC	u component of wind	
NMCGPHZJC	v component of wind	
NMCGPHZKC	directional shear	
NMCGPHZLC	speed shear	
NMCGPHZPC	perturbation wind	Slater
NMCGPHZTC	thermal wind	
NMCGPHZWC	measured vertical motion	
NMCGPHZYC	isotachs	
NMCGPHZZC	returned power	
NMCGPHZAD	plotted winds	
NMCGPHZID	u component of wind	
NMCGPHZJD	v component of wind	
NMCGPHZKD	directional shear	
NMCGPHZLD	speed shear	
NMCGPHZPD	perturbation wind	Neligh
NMCGPHZTD	thermal wind	
NMCGPHZWD	measured vertical motion	
NMCGPHZYD	isotachs	
NMCGPHZZD	returned power	

Code	Description	Station
NMCGPHZAE	plotted winds	
NMCGPHZIE	u component of wind	
NMCGPHZJE	v component of wind	
NMCGPHZKE	directional shear	
NMCGPHZLE	speed shear	
NMCGPHZPE	perturbation wind	Winchester
NMCGPHZTE	thermal wind	
NMCGPHZWE	measured vertical motion	
NMCGPHZYE	isotachs	
NMCGPHZZE	spectral power	
NMCGPHZAF	plotted winds	
NMCGPHZIF	u component of wind	
NMCGPHZJF	v component of wind	
NMCGPHZKF	directional shear	
NMCGPHZLF	speed shear	
NMCGPHZPF	perturbation wind	Blue River
NMCGPHZTF	thermal wind	
NMCGPHZWF	measured vertical motion	
NMCGPHZYF	isotachs	
NMCGPHZZF	returned power	
NMCGPHZAG	plotted winds	
NMCGPHZIG	u component of wind	
NMCGPHZJG	v component of wind	
NMCGPHZKG	directional shear	
NMCGPHZLG	speed shear	
NMCGPHZPG	perturbation wind	Wolcott
NMCGPHZTG	thermal wind	
NMCGPHZWG	measured vertical motion	
NMCGPHZYG	isotachs	
NMCGPHZZG	returned power	
NMCGPHZAH	plotted winds	
NMCGPHZIH	u component of wind	
NMCGPHZJH	v component of wind	
NMCGPHZKH	directional shear	
NMCGPHZLH	speed shear	
NMCGPHZPH	perturbation wind	Bloomfield
NMCGPHZTH	thermal wind	
NMCGPHZWH	measured vertical motion	
NMCGPHZYH	isotachs	
NMCGPHZZH	returned power	
NMCGPHZAI	plotted winds	
NMCGPHZII	u component of wind	
NMCGPHZJI	v component of wind	
NMCGPHZKI	directional shear	Vandenberg AFB
NMCGPHZLI	speed shear	(formerly Sudbury)
NMCGPHZPI	perturbation wind	
NMCGPHZTI	thermal wind	
NMCGPHZWI	measured vertical motion	

Code	Description	Station
NMCGPHZYI	isotachs	Vandenberg AFB
NMCGPHZZI	returned power	(formerly Sudbury)
NMCGPHZAJ	plotted winds	
NMCGPHZIJ	u component of wind	
NMCGPHZJJ	v component of wind	
NMCGPHZKJ	directional shear	
NMCGPHZLJ	speed shear	
NMCGPHZPJ	perturbation wind	Wood Lake
NMCGPHZTJ	thermal wind	
NMCGPHZWJ	measured vertical motion	
NMCGPHZYJ	isotachs	
NMCGPHZZJ	returned power	
NMCGPHZAK	plotted winds	
NMCGPHZIK	u component of wind	
NMCGPHZJK	v component of wind	
NMCGPHZKK	directional shear	
NMCGPHZLK	speed shear	
NMCGPHZPK	perturbation wind	DeQueen
NMCGPHZTK	thermal wind	
NMCGPHZWK	measured vertical motion	
NMCGPHZYK	isotachs	
NMCGPHZZK	returned power	
NMCGPHZAL	plotted winds	
NMCGPHZIL	u component of wind	
NMCGPHZJL	v component of wind	
NMCGPHZKL	directional shear	
NMCGPHZLL	speed shear	
NMCGPHZPL	perturbation wind	Okolona
NMCGPHZTL	thermal wind	
NMCGPHZWL	measured vertical motion	
NMCGPHZYL	isotachs	
NMCGPHZZL	returned power	
NMCGPHZAM	plotted winds	
NMCGPHZIM	u component of wind	
NMCGPHZJM	v component of wind	
NMCGPHZKM	directional shear	
NMCGPHZLM	speed shear	
NMCGPHZPM	perturbation wind	Winnfield
NMCGPHZTM	thermal wind	
NMCGPHZWM	measured vertical motion	
NMCGPHZYM	isotachs	
NMCGPHZZM	returned power	
NMCGPHZAN	plotted winds	
NMCGPHZIN	u component of wind	
NMCGPHZJN	v component of wind	
NMCGPHZKN	directional shear	Palestine
NMCGPHZLN	speed shear	
NMCGPHZPN	perturbation wind	

Code	Description	Station
NMCGPHZTN	thermal wind	
NMCGPHZWN	measured vertical motion	
NMCGPHZYN	isotachs	Palestine
NMCGPHZZN	returned power	
NMCGPHZAO	plotted winds	
NMCGPHZIO	u component of wind	
NMCGPHZJO	v component of wind	
NMCGPHZKO	directional shear	
NMCGPHZLO	speed shear	
NMCGPHZPO	perturbation wind	Jayton
NMCGPHZTO	thermal wind	
NMCGPHZWO	measured vertical motion	
NMCGPHZYO	isotachs	
NMCGPHZZO	returned power	
NMCGPHZAP	plotted winds	
NMCGPHZIP	u component of wind	
NMCGPHZJP	v component of wind	
NMCGPHZKP	directional shear	
NMCGPHZLP	speed shear	
NMCGPHZPP	perturbation wind	Tucumcari
NMCGPHZTP	thermal wind	
NMCGPHZWP	measured vertical motion	
NMCGPHZYP	isotachs	
NMCGPHZZP	returned power	
NMCGPHZAQ	plotted winds	
NMCGPHZIQ	u component of wind	
NMCGPHZJQ	v component of wind	
NMCGPHZKQ	directional shear	
NMCGPHZLQ	speed shear	
NMCGPHZPQ	perturbation wind	Granada
NMCGPHZTQ	thermal wind	
NMCGPHZWQ	measured vertical motion	
NMCGPHZYQ	isotachs	
NMCGPHZZQ	returned power	
NMCGPHZAR	plotted winds	
NMCGPHZIR	component of wind	
NMCGPHZJR	v component of wind	
NMCGPHZKR	directional shear	
NMCGPHZLR	speed shear	
NMCGPHZPR	perturbation wind	McCook
NMCGPHZTR	thermal wind	
NMCGPHZWR	measured vertical motion	
NMCGPHZYR	isotachs	
NMCGPHZZR	returned power	
NMCGPHZAS	plotted winds	
NMCGPHZIS	u component of wind	
NMCGPHZJS	v component of wind	Merriman
NMCGPHZKS	directional shear	

Code	Description	Station
NMCGPHZLS	speed shear	
NMCGPHZPS	perturbation wind	
NMCGPHZTS	thermal wind	
NMCGPHZWS	measured vertical motion	Merriman
NMCGPHZYS	isotachs	
NMCGPHZZS	returned power	
NMCGPHZAT	plotted winds	
NMCGPHZIT	u component of wind	
NMCGPHZJT	v component of wind	
NMCGPHZKT	directional shear	
NMCGPHZLT	speed shear	
NMCGPHZPT	perturbation wind	Medicine Bow
NMCGPHZTT	thermal wind	
NMCGPHZWT	measured vertical motion	
NMCGPHZYT	isotachs	
NMCGPHZZT	returned power	
NMCGPHZAU	plotted winds	
NMCGPHZIU	u component of wind	
NMCGPHZJU	v component of wind	
NMCGPHZKU	directional shear	
NMCGPHZLU	speed shear	
NMCGPHZPU	perturbation wind	Aztec
NMCGPHZTU	thermal wind	
NMCGPHZWU	measured vertical motion	
NMCGPHZYU	isotachs	
NMCGPHZZU	returned power	
NMCGPHYD0	divergence	
NMCGPHYR0	derived vertical motion	
NMCGPHYV0	vorticity	
NMCGPHYD1	divergence	
NMCGPHYR1	derived vertical motion	
NMCGPHYV1	vorticity	locally defined
NMCGPHYD2	divergence	triangle of stations
NMCGPHYR2	derived vert motion	
NMCGPHYV2	vorticity	
NMCGPHYD3	divergence	
NMCGPHYR3	derived vertical motion	
NMCGPHYV3	vorticity	

B. CROSS SECTION PRODUCTS

Code	Description	Station
NMCGPHXA0	plotted winds	
NMCGPHXM0	parallel component	
NMCGPHXN0	perpendicular component	locally defined
NMCGPHXW0	measured vertical motion	set of stations
NMCGPHXT0	thermal wind	
NMCGPHXZ0	returned power	

Code	Description	Station
NMCGPHXA1	plotted winds	
NMCGPHXM1	parallel component	
NMCGPHXN1	perpendicular component	locally defined
NMCGPHXW1	measured vertical motion	set of stations
NMCGPHXT1	thermal wind	
NMCGPHXZ1	returned power	
NMCGPHXA2	plotted winds	
NMCGPHXM2	parallel component	
NMCGPHXN2	perpendicular component	locally defined
NMCGPHXW2	measured vertical motion	set of stations
NMCGPHXT2	thermal wind	
NMCGPHXZ2	returned power	
NMCGPHXA3	plotted winds	
NMCGPHXM3	parallel component	
NMCGPHXN3	perpendicular component	locally defined
NMCGPHXW3	measured vertical motion	set of stations
NMCGPHXT3	thermal wind	
NMCGPHXZ3	returned power	

C. PLAN VIEW PRODUCTS

Code	Level	Description
NMCGPHAMA	500 m	
NMCGPHBMA	750 m	
NMCGPHCMA	1000 m	
NMCGPHDMA	1250 m	
NMCGPH9MA	900 mb	
NMCGPH8MA	850 mb	
NMCGPH7MA	700 mb	plotted winds
NMCGPH6MA	600 mb	
NMCGPH5MA	500 mb	
NMCGPH4MA	400 mb	
NMCGPH3MA	300 mb	
NMCGPH2MA	200 mb	
NMCGPH0MA	sfc	
NMCGPHAMB	500 m	
NMCGPHBMB	750 m	
NMCGPHCMB	1000 m	
NMCGPHDMB	1250 m	
NMCGPH9MB	900 mb	
NMCGPH8MB	850 mb	
NMCGPH7MB	700 mb	time change of u component
NMCGPH6MB	600 mb	
NMCGPH5MB	500 mb	
NMCGPH4MB	400 mb	
NMCGPH3MB	300 mb	
NMCGPH2MB	200 mb	

Code	Level	Description
NMCGPHAMC	500 m	
NMCGPHBMC	750 m	
NMCGPHCMC	1000 m	
NMCGPHDMC	1250 m	
NMCGPH9MC	900 mb	
NMCGPH8MC	850 mb	
NMCGPH7MC	700 mb	time change of v component
NMCGPH6MC	600 mb	
NMCGPH5MC	500 mb	
NMCGPH4MC	400 mb	
NMCGPH3MC	300 mb	
NMCGPH2MC	200 mb	
NMCGPHAMD	500 m	
NMCGPHBMD	750 m	
NMCGPHCMD	1000 m	
NMCGPHDMD	1250 m	
NMCGPH9MD	900 mb	
NMCGPH8MD	850 mb	
NMCGPH7MD	700 mb	divergence
NMCGPH6MD	600 mb	
NMCGPH5MD	500 mb	
NMCGPH4MD	400 mb	
NMCGPH3MD	300 mb	
NMCGPH2MD	200 mb	
NMCGPHAME	500 m	
NMCGPHBME	750 m	
NMCGPHCME	1000 m	
NMCGPHDME	1250 m	
NMCGPH9ME	900 mb	
NMCGPH8ME	850 mb	
NMCGPH7ME	700 mb	time change of vorticity
NMCGPH6ME	600 mb	
NMCGPH5ME	500 mb	
NMCGPH4ME	400 mb	
NMCGPH3ME	300 mb	
NMCGPH2ME	200 mb	
NMCGPHAMG	500 m	
NMCGPHBMG	750 m	
NMCGPHCMG	1000 m	
NMCGPHDMG	1250 m	
NMCGPH9MG	900 mb	
NMCGPH8MG	850 mb	
NMCGPH7MG	700 mb	time change of divergence
NMCGPH6MG	600 mb	
NMCGPH5MG	500 mb	
NMCGPH4MG	400 mb	
NMCGPH3MG	300 mb	
NMCGPH2MG	200 mb	

Code	Level	Description
NMCGPHAMS	500 m	
NMCGPHBMS	750 m	
NMCGPHCMS	1000 m	
NMCGPHDMS	1250 m	
NMCGPH9MS	900 mb	
NMCGPH8MS	850 mb	
NMCGPH7MS	700 mb	streamlines
NMCGPH6MS	600 mb	
NMCGPH5MS	500 mb	
NMCGPH4MS	400 mb	
NMCGPH3MS	300 mb	
NMCGPH2MS	200 mb	
NMCGPHAMT	500 m	
NMCGPHBMT	750 m	
NMCGPHCMT	1000 m	
NMCGPHDMT	1250 m	
NMCGPH9MT	900 mb	
NMCGPH8MT	850 mb	
NMCGPH7MT	700 mb	thermal wind
NMCGPH6MT	600 mb	
NMCGPH5MT	500 mb	
NMCGPH4MT	400 mb	
NMCGPH3MT	300 mb	
NMCGPH2MT	200 mb	
NMCGPHAMV	500 m	
NMCGPHBMV	750 m	
NMCGPHCMV	1000 m	
NMCGPHDMV	1250 m	
NMCGPH9MV	900 mb	
NMCGPH8MV	850 mb	
NMCGPH7MV	700 mb	vorticity
NMCGPH6MV	600 mb	
NMCGPH5MV	500 mb	
NMCGPH4MV	400 mb	
NMCGPH3MV	300 mb	
NMCGPH2MV	200 mb	
NMCGPHAMW	500 m	
NMCGPHBMW	750 m	
NMCGPHCMW	1000 m	
NMCGPHDMW	1250 m	
NMCGPH9MW	900 mb	
NMCGPH8MW	850 mb	
NMCGPH7MW	700 mb	vertical velocity
NMCGPH6MW	600 mb	
NMCGPH5MW	500 mb	
NMCGPH4MW	400 mb	
NMCGPH3MW	300 mb	
NMCGPH2MW	200 mb	

Code	Level	Description
NMCGPHAMX	500 m	
NMCGPHBMX	750 m	
NMCGPHCMX	1000 m	
NMCGPHDMX	1250 m	
NMCGPH9MX	900 mb	
NMCGPH8MX	850 mb	
NMCGPH7MX	700 mb	time change of vertical velocity
NMCGPH6MX	600 mb	
NMCGPH5MX	500 mb	
NMCGPH4MX	400 mb	
NMCGPH3MX	300 mb	
NMCGPH2MX	200 mb	
NMCGPHAMY	500 m	
NMCGPHBMY	750 m	
NMCGPHCMY	1000 m	
NMCGPHDMY	1250 m	
NMCGPH9MY	900 mb	
NMCGPH8MY	850 mb	
NMCGPH7MY	700 mb	isotachs
NMCGPH6MY	600 mb	
NMCGPH5MY	500 mb	
NMCGPH4MY	400 mb	
NMCGPH3MY	300 mb	
NMCGPH2MY	200 mb	
NMCGPHAMZ	500 m	
NMCGPHBMZ	750 m	
NMCGPHCMZ	1000 m	
NMCGPHDMZ	1250 m	
NMCGPH9MZ	900 mb	
NMCGPH8MZ	850 mb	
NMCGPH7MZ	700 mb	returned power
NMCGPH6MZ	600 mb	
NMCGPH5MZ	500 mb	
NMCGPH4MZ	400 mb	
NMCGPH3MZ	300 mb	
NMCGPH2MZ	200 mb	

D. HODOGRAPH PRODUCTS

Code	Station
NMCGPHZH0	Platteville
NMCGPHZH1	Lathrop
NMCGPHZH2	Fairbury
NMCGPHZH3	Hillsboro
NMCGPHZH4	White Sands
NMCGPHZH5	Haviland
NMCGPHZH6	Neodesha
NMCGPHZH7	Lamont
NMCGPHZH8	Vici
NMCGPHZH9	Haskell

Code	Station
NMCGPHZHA	Purcell
NMCGPHZHB	Conway
NMCGPHZHC	Slater
NMCGPHZHD	Neligh
NMCGPHZHE	Winchester
NMCGPHZHF	Blue River
NMCGPHZHG	Wolcott
NMCGPHZHH	Bloomfield
NMCGPHZHI	Vandenberg AFB
NMCGPHZHJ	Wood Lake
NMCGPHZHK	DeQueen
NMCGPHZHL	Okolona
NMCGPHZHM	Winnfield
NMCGPHZHN	Palestine
NMCGPHZHO	Jayton
NMCGPHZHP	Tucumcari
NMCGPHZHQ	Granada
NMCGPHZHR	McCook
NMCGPHZHS	Merriman
NMCGPHZHT	Medicine Bow
NMCGPHZHU	Aztec

E. MISCELLANEOUS PRODUCTS

Code	Description
NMCGPHB41	Blank map background for time sections
NMCWPDERL	Input BUFR product
NMCGPHWPD	WPDN map
cccWPDMSG	Message product
cccMCPWPD	Profiler preformat
cccWPDxxx	Profiler preformat