U.S. DEPARTMENT OF COMMERCE
NATIONAL OCEANIC AND ATMOSPHERIC ADMINISTRATION
NATIONAL WEATHER SERVICE
OFFICE OF SYSTEMS DEVELOPMENT
TECHNIQUES DEVELOPMENT LABORATORY

TDL OFFICE NOTE 85-5

TECHNIQUES USED IN THE COMPUTER WORDED FORECAST PROGRAM FOR ZONES: INTERPOLATION AND COMBINATION

Robert L. Miller and Harry R. Glahn

February 1985

TECHNIQUES USED IN THE COMPUTER WORDED FORECAST PROGRAM FOR ZONES: INTERPOLATION AND COMBINATION

Robert L. Miller and Harry R. Glahn

1. INTRODUCTION

Computer worded forecasts (CWF's) have been developed by the Techniques Development Laboratory (TDL) (Glahn, 1978 and 1979; Heffernan and Glahn, 1979; Bermowitz et al., 1980; Bermowitz and Miller, 1984) and are produced in real time for both stations and National Weather Service (NWS) public zones. The forecasts are generated centrally at the National Meteorological Center (NMC) and transmitted via the Automation of Field Operations and Services (AFOS) system to Weather Service Forecast Offices (WSFO's) within the contiguous United States. CWF's are currently available for 111 stations and zones of 22 WSFO's twice daily, based on the 0000 and 1200 GMT cycles.

The CWF software uses the numerical forecasts of Model Output Statistics (MOS) as input from which to construct the phraseology. The software also utilizes the temperature climatology of the stations and zones for determining modifying words such as "seasonable temperatures." Meteorologists at each WSFO can specify criteria which the software uses to customize the CWF for their WSFO. For example, they can set the complexity of word phrases for each of four weather elements: temperature, precipitation, wind, and clouds.

CWF's which are produced for public zones require two major computational steps in addition to the steps taken in the CWF's for stations. First, since MOS guidance and temperature climatology are available for stations only and values are needed at zone centers, a technique has been developed which is used to interpolate these values to the centers of zones from surrounding stations. Second, the CWF software combines zones with similar MOS forecasts into a single worded forecast. While combinations are based on forecasters' preferred zone combinations, the program allows the flexibility to vary zone combinations depending on the meteorological situation as predicted by MOS.

The purpose of this paper is to document these two techniques which are used in the CWF program for zones: interpolation and combination.

2. INTERPOLATION

CWF's are produced from MOS guidance; MOS forecasts have been developed for 230 NWS stations, but not for public zones. Similarly, temperature climatology is available for NWS stations but not for zones. Therefore, in order to generate CWF's for zones, a technique has been devised which interpolates MOS guidance and temperature climatology from NWS stations to zone centers. It is these interpolated values that are used by the CWF algorithms to generate the worded forecasts.

The interpolation is performed to the center of a zone; the center is located subjectively and defined in units of latitude and longitude. From one to five stations can be used in the interpolation. If only one station is used for a zone, then the climatology and MOS forecasts of the zone are identical to those of the station.

If two stations are chosen for a zone, then linear interpolation is performed from the stations to the center of the zone. Fig. 1 and the following description illustrate the technique which is used. A line defined by the two stations is drawn. Another line is extended from the center of the zone so that it intersects the first line perpendicularly. This second line must intersect the first line between the two stations; if it does not, then another selection of stations must be made. Values of weather elements (climatology and MOS guidance) are derived at the intersection point by linear interpolation from the points of the two stations. The derived values are applied directly to the zone center without change. Therefore, the zone center should be as near to the intersection point as possible in order to optimize this technique. In other words, the zone center should be as close as possible to the line connecting the two stations.

Linear interpolation is also performed for the case of selecting three stations. Fig. 2 and the following graphical description should help the reader understand this case. Points are plotted in 3-dimensional space corresponding to a weather element's value at each station. The x and y-axes are used to denote a station's geographical location, and the value of the weather element at each station is marked in the z-axis. A unique plane is formed which passes through the three points in space. The zone center's geographical position is also plotted on the x-y plane, and a vertical line is extended from this point until it intersects the unique plane. The value in the z-axis at this intersection point is the interpolated value of the weather element for the zone center. The intersection point must lie within the triangle of the three points which form the unique plane; if it does not, then another choice of stations is required. Note that if the intersection point is very near one side of the triangle, then the station which forms the opposite point of the triangle exerts very little influence on the interpolation, and this three-station situation degenerates to the two-station technique described above. This condition may be undesirable, especially if that station is the closest one to the zone center, which usually implies that it should have considerable influence during interpolation.

A least squares fit is used to determine the value of weather elements if four or five stations are selected. The zone center must lie within the area enclosed by the points denoting the four or five stations; otherwise, another group of stations is needed.

The number and relative locations of stations which are chosen for a particular zone are dependent upon several factors. A major factor is proximity of a station to the center of a zone. As a rule of thumb, a station should be within 150 miles of the center. Elevation is an important consideration, especially in mountainous regions. It is often difficult to select representative stations for a mountainous zone, since nearby stations are frequently at much lower elevations. Also, the relative position of a station with respect to a mountain range (e.g., windward or leeward side) should be as similar as possible to the zone's relative position. Another factor concerns distance and orientation of a station from a large body of water; a station which is selected should correspond as nearly as possible with the zone's distance and orientation. Stations in urban areas should be scrutinized carefully before being chosen for use with a zone not in an urban area.

It is often difficult to choose the number of stations to be used with a zone; for example, should only stations A and B be selected, or should C be included, also? As a rule of thumb, if station C is representative enough of the zone to contribute positively (even if it exerts only a slight influence), then it should also be included. A judicious choice of stations should ensure that the resulting interpolation is as representative as possible.

Occasionally, stations are selected which result in an interpolation that requires "fine tuning" because the relative weightings given to the stations are not quite right. In this case, corrective action can be taken by subjectively specifying the zone center at a location which gives the desired weighting of stations. Fine tuning should be performed only when absolutely necessary, since interpolation is applied to all weather elements, and timing of events for the zone CWF depends on the position specified for the zone center.

Two groups of stations are selected for each zone, each group consisting of one to five stations. The first group is chosen from the 230 NWS stations for which MOS forecasts have been developed. The second group is chosen from the combined set of 230 NWS stations and 180 United States military stations for which MOS forecasts are made. The second group is preferable since the greater density of stations in the combined set often results in a better selection for interpolation. Unfortunately, the second group cannot be used for all weather elements. MOS forecasts of weather elements produced from single station equations are not available for military stations (except winds at Navy stations); only MOS forecasts of weather elements produced from generalized operator equations are available. (A generalized operator equation is one which is developed and applied over a region which is considered homogeneous.) Therefore, the second group of stations is used with all weather elements available for military stations, and the first group is used for remaining elements. The first group is also used to compute the temperature climatology for a zone by means of interpolation. Table 1 contains a complete listing of weather elements which belong in each group.

Note that the stations which are in the first group do not have to be in the second group, and vice versa. It is possible for the groups to be mutually exclusive. Stations should be selected based on the best combination of available stations for that group. If the choice is not clear for one group, then continuity between the two groups of stations is desirable.

3. COMBINATION

The CWF software has the capability to combine zones with similar MOS forecasts into a single worded forecast. The objective of the code is to group zones in the same way a WSFO forecaster would for the same meteorological conditions. Because complex code is required to combine zones, the subroutines which are used are mentioned by name to familiarize the reader with the code. Fig. 3 depicts the software structure for the applicable subroutines. The process which decides the order in which zones are checked for combining is contained within subroutine COMBNE. COMBNE calls subroutine COMB which in turn calls subroutine CHECK to perform the actual check to determine if a particular group of zones is permitted to combine. Subroutine COMB1, also called

Table 1. Weather elements categorized according to interpolation group.

Group 1 (230 NWS Stations)	Group 2 (230 NWS Stations and 180 U.S. Military Stations)
Max/min temperature	Ceiling
3-h temperature	Visibility
Dewpoint temperature	Snow amount
Probability of frozen precipitation	12-h probability of precipitation
Probability of freezing precipitation	6-h probability of precipitation
Precipitation type	Quantitative precipitation forecast
Probability of liquid precipitation type	Cloud amount
Probability of thunderstorms	Obstructions to vision
Probability of severe thunderstorms	
Wind direction and speed	
Temperature climatology	

by COMBNE, combines weather elements of zones which are being grouped into a single set. Finally, COMBNE calls subroutine ZNEOUT which restructures the single set of weather elements into a combined zone matrix.

Subroutine COMBNE utilizes two lists of zones from which groups of zones are selected to check for combining: the "A list" and the "B list." Each zone of a WSFO is placed on one of the lists. The goal of the zone lists is to provide a mechanism for selecting groups of zones for the CWF which reflect the forecasters' choices of zone combinations. The software allows the number and combination of zones within each group to change from day to day as meteorological conditions change; however, the structure of the zone lists does not permit all possible combinations of zones. Therefore, it is important to formulate zone lists which optimize zone groupings at each WSFO. A judicious choice of zone lists should result in a computer selection process which can nearly match the zone combinations which are commonly used by forecasters.

The first step in accomplishing the optimization is to write down the forecasters' preferred combinations of zones. These are obtained by asking the WSFO forecasters directly and by monitoring the locally prepared zone forecast products (ZFP's) on AFOS. The preferred combinations should start with the most common and run in order of decreasing frequency of occurrence.

The next step involves deciding which zone list each zone belongs on, either the A list or the B list. The A list restricts zone combination more than the B list. Each list contains subgroups of zones; zones in the same subgroup are contained on the same line of the list. See the lists in Fig. 4 for an example. Zones on the A list are only allowed to combine with other zones on the same line of the A list, not other lines of the A list or any of the B list. Therefore, a zone which is by itself on a line of the A list can never combine with any other zones. Zones on the B list can combine not only with other zones on the same line, but also with zones on other lines of the B list. However, zones on the same line form a preferred combination; they combine with each other more often than with zones on other lines. Note that

in order for two zones on the B list to combine, whether on the same line or different lines, all zones placed in the B list between the two must also combine with them. Zones on the same line do not have to combine; they form a preferred combination, not a required combination. An important rule concerning combining of the B list is that zones which are combining may be composed of an unlimited number of adjoining entire lines, but only one partial line can be included with the complete lines. Two partial lines can never combine.

After each zone has been selected for the A or B list, the number of lines and order of zones within the lines must be chosen for each of the two lists. At this step in the process, the forecasters' preferred combinations of zones are very useful. The lists should be ordered in such a manner to include as many of the preferred combinations as possible, especially the common ones since, in many cases, all combinations cannot be permitted.

Within a given line of the A list or throughout the B list, zones which are placed next to each other should be geographically adjacent. This rule ensures that the zones which combine with each other are contiguous. A graphical analogy of this rule is to construct a curve for each line of the A list and one curve throughout the B list. See Fig. 4 for an example. The curves must pass from one zone to an adjoining zone so that each zone contains exactly one curve.

Subroutine COMBNE examines the A list first. Fig. 5 displays a detailed flow chart of the decisions which are guided by the A list. COMBNE initially determines the number of lines in the A list. If there are no lines, then the code skips to the section dealing with the B list. Otherwise, the number of zones on the first line of the A list is determined. The first call to COMB checks the entire line for combining; if all the zones can combine together, then COMB1 and ZNEOUT are called to output the first line of zones in the form of a single combined zone matrix. The program then proceeds to the second line of the A list.

If all zones on the first line do not combine, that line is split into halves. Splitting a line with an odd number of zones results in the first half having one less zone than the second half. If zones in each of the first and second halves combine, subroutines COMB1 and ZNEOUT are each called twice to output each half of the first line; the code then examines the second line of the A list. If either of the two halves does not combine, COMBNE looks at segments of the first line. COMB is called to check the first two zones for combining. If combining is allowed, then the third zone is also included with the first two zones and COMB checks all 3 zones for combining. This process of adding the next zone in the line and checking the group continues until one of two events occurs: 1) the group does not combine, or 2) the first through next to last zones in the line have combined (since the entire line failed to combine, there is no need to check the last zone). If the first event occurs, then the last zone just added is dropped from the group, and the remaining zones in the group are combined and output in matrix form. The zone which was dropped becomes the first zone to be checked with following zones in the line with use of the same loop as before. The process continues with as many iterations as necessary until all zones in the line have been checked. If the groupings result in all zones being output except the final zone in the line,

then that last zone is immediately output by itself. If the second event occurs, COMB1 and ZNEOUT are each called twice to output the combination of the first through next to last zones in the line and to output the last zone in the line by itself. This entire procedure is repeated for all lines of the A list.

Subroutine COMBNE then examines the B list. Fig. 6 depicts the corresponding flow chart of decisions which are guided by the B list. COMBNE initially calculates the number of lines which the B list contains. If it is void of lines, then the code skips to the RETURN message. Otherwise, COMBNE checks each entire line for combining by calling COMB; a key keeps track of which complete lines combine. Zones which are listed on the same line of the B list form a preferred combination; they combine with each other more often than with zones on other lines. The primary reason is due to this initial checking of each entire line for combining and setting the corresponding key. Once a line is found to combine, it is <u>never</u> split later in the code.

After the key has been set for all lines, the program returns to the first line. If the key indicates that zones on the first line combine, then the second line is examined; if its zones combine, too, then COMB is called to check the combination of both lines. As long as the combination passes the check and the next line's key denotes that its zones combine, that next line is added to the group of lines and COMB is called. When a line whose zones combine does not combine with the previous line or lines, then COMB1 and ZNEOUT are called to output the previous line or lines in the form of a single combined zone matrix. The line which did not combine with the others is then grouped with the following line, provided the key indicates that zones on the following line combine, and COMB is again called to check the combination of these two lines. Thus, the process described for the first set of lines is repeated for other sets of lines throughout the B list. The important point to note is that this loop requires each line of zones to have combined, as detected by the key. When the key for a line indicates zones in that line did not combine, the following methodology is used regardless of whether the line is first, last, or in between.

Similar to the procedure used in the A list, if all zones on a line of the B list do not combine, the line is split into halves. If zones in both the first and second halves combine, the program attempts to combine the first half with previous adjacent complete lines, if any, which have combined but not been output and to combine the second half with subsequent adjacent complete lines, if any. If the first half of a line combines with previous full lines but the second half does not combine with subsequent lines, then zones from the second half are added one-by-one to the first half group (includes previous line(s)) and COMB is called until the group fails to combine. Then the remaining zones from the second half, including the zone which would not combine with the modified first half group are tested for combining with the subsequent full lines. If this group combines, then COMB1 and ZNEOUT are called twice, once to output this group and a second time to output the modified first half group including previous full lines. If this group fails to combine, then the first half of the line and the previous full lines are output as one group, and the second half of the line is output alone as another group.

If either the first or second half of a line does not combine, then the program starts with the first zone in the line and attempts to combine it with previous complete lines, if any, which have combined but not been output. If the attempt is successful, then the second zone in the line is added to the group and checked for combining. This process is repeated until the combination is rejected; the last successful combination is output, then the line is checked again starting with the zone which caused the rejection. An additional zone is added with each check until either the combination fails or the end of the line is reached. If the former condition occurs, then the last successful combination (or single zone if no combination) is output and checks are again started on the remainder of the line; if the latter condition occurs, then the program attempts to combine the final portion of the line (which could be one zone) with subsequent full lines, if any.

The following example should clarify the concept of the A and B lists. Assume that a given WSFO has 18 zones. Let's place them on the lists as follows:

A List	B List
1, 2	7, 8
3	9
4, 5, 6	10, 11, 12, 13
	14, 15
	16, 17, 18

Note that the zone numbers are in numerical order for this example, but are unlikely to be so in an actual case. On the A list, in this case, zone 3 is always by itself. Zones 1 and 2 may combine with each other, but not with any other zones. The same holds true for zones 4, 5, and 6. If the entire line (zones 4, 5, and 6) does not combine, then it is broken into halves: zone 4 is the first half, and zones 5 and 6 are the second half. Obviously zone 4 can go by itself, and if zones 5 and 6 combine, then the two halves are output. Otherwise, zones 4 and 5 are checked for combining. If they combine, then they are output and zone 6 is output by itself. If they don't combine, then zones 4, 5, and 6 are output individually.

The first step involving the B list is to check the zones of each entire line for combining and set keys corresponding to which lines can combine. In this example, let's say zones of the following lines can combine: line 7, 8; line 9; and line 14, 15. Next, a check is made to see if zones 7, 8, and 9 combine since the zones are on adjoining lines, both of which can combine. Let's assume that zones 7, 8, and 9 do not combine; then zones 7 and 8 are output as a group.

Zones 10, 11, 12, and 13 on the third line are known to not combine. Checks are made to see if the first half (zones 10 and 11) and the second half (zones 12 and 13) can combine. Let's say that both halves can. Next, a check is made to see if zones 9, 10, and 11 can combine. Assume they can. A check is performed to see if zones 12, 13, 14, and 15 can combine (zones 14 and 15 are known to combine already). Let's say they do not combine. A combining

check is then made for zones 9, 10, 11, and 12. Assume they combine. The next check is made for zones 13, 14, and 15. Let's assume that they combine also. As a result, zones 9, 10, 11, and 12 are output as one group, and zones 13, 14, and 15 are output as another group.

The line remaining consists of zones 16, 17, and 18 which are known to not combine. Splitting the line into halves and checking combinations, it is obvious that zone 16 can go by itself. Let's say that zones 17 and 18 do not combine. A combining check is then made for zones 16 and 17. Assume they combine. Consequently, zones 16 and 17 are output as a group and zone 18 is output by itself. To summarize, in this example, zones on the B list would result in the following groupings:

7, 8
9, 10, 11, 12
13, 14, 15
16, 17
18

As mentioned earlier, subroutine COMB calls CHECK to perform the actual check to decide if a group of zones is allowed to combine. Immediately prior to this call, COMB calls subroutine COMBU to determine the maximum and minimum values for each projection of each weather element contained within the group of zones being considered for combining. For example, if three zones are being checked with forecast values of first period maximum temperature of 69, 70, and 75, COMBU returns a maximum value of 75 and a minimum value of 69 for the group's first period maximum temperature. This procedure is followed regardless of the number of zones.

CHECK then calculates the difference (6 in this case) and compares it to three preset critical values. Table 2 contains the matrix of critical values. Note the differences are categorized according to weather element and forecast period. The three values within each category correspond to allowable large, medium, and small differences, respectively. For many elements, the diferences permitted become greater with time. If a difference exceeds the smallest critical value, then it is counted as a small difference. If the middle critical value is also surpassed, then the difference is also counted as a medium difference, and a difference in excess of the largest critical value is tabulated as a large difference, also. In the above example, the difference of 6 exceeds the small and medium critical values so it is counted as both a small and medium difference.

CHECK sums the number of critical differences exceeded for the complete set of projections of weather elements, keeping small, medium, and large differences separate. If the number of counts for any one of the three differences equals or exceeds preset critical flags, then the zones are prevented from combining. As Table 3 illustrates, these flags can vary from WSFO to WSFO. The three values at each WSFO represent flags for counts of large, medium, and small differences, respectively. In this example, PIT zones with one large difference can combine, but WBC, ALB, and PHL zones with one large difference cannot combine.

Table 2. Critical differences permitted in weather elements during zone combination.

1st Period			2nd Period			3rd Period			Weather Element
6	5	4	7	6	5	8	7	6	1 MAX TEMP
6	5	4	7	6	5	8	7	6	2 MIN TEMP
25	20	15	25	20	15	30	25	20	3 12-H POP
30	25	20	30	25	20	40	35	30	4 6-H POP
15	10	8	15	10	8	20	15	12	5 POZR
30	20	10	30	20	10	35	25	15	6 POF
3	3	3	3	3	3	3	3	3	7 PRECP TYPE
40	30	20	40	30	20	50	40	30	8 DRZL
40	30	20	40	30	20	50	40	30	9 RAIN
40	30	20	40	30	20	50	40	30	10 R SHR
10	7	5	10	7	5	15	13	10	11 TSTM
1	1	0	1	1	0	1	1	0	12 QPF
3	2	1	3	2	1	3	3	2	13 CLOUD
6	6	6	6	6	6	6	6	6	14 CIG
6	6	6	6	6	6	6	6	6	15 VIS
10	9	7	10	9	7	17	15	10	16 U WIND
10	9	7	10	9	7	17	15	10	17 V WIND
15	12	10	15	12	10	25	20	15	18 WIND S
7	6	5	8	7	6	9	8	7	19 3-H TEMP
2	2	2	2	2	2	4	4	4	20 SNOW AMT
17	16	15	18	17	16	19	18	17	21 DWPT TEMP
4	4	4	4	4	4	4	4	4	22 OB VIS

Table 3. Example of Weather Service Forecast Office flags.

WSFO	Sum of Critical Differences Large	Medium	Small
WBC	1	3	8
ALB	1	3	8
PHL	1	4	9
PIT	2	4	10

The process of actually combining the weather elements of zones which can combine occurs in subroutine COMB1. For most of the elements, this process consists simply of averaging the values and rounding to the nearest integer for each projection. For a few elements (snow amount, obstruction to vision, precipitation type, and wind), the process is more complicated, however. The four categories of snow amount are 0, 2, 4, and 6. Since a simple average and rounding of these values can result in the integers 1, 3, and 5, the rounding is performed to the nearest even integer for this element.

For obstruction to vision, COMB1 calls subroutine OBVIS (see Fig. 3) to select the appropriate category for each projection of the combining zones. Obstruction to vision contains four categories:

1. no obstruction
2. smoke, haze
3. blowing phenomena (e.g., blowing snow)
4. fog

Instead of averaging (which would be meaningless in many cases), the number of individual zones with a forecast in each category is counted and the category which is forecast most frequently is used in the combined zone grouping. In case of a tie, the category is determined by code which is depicted in Table 4. Note that the averaged visibility forecast for the combined zone grouping is used in the determination.

Table 4. The obstruction to vision forecast for a combined zone matrix in the case of a tie for most frequent category.

Tied Categories	Visibility Forecast	OBVIS Forecast
1,2	6	1
1,2	1-5	2
1,3	1-6	1
1,4	6	1
1,4	1-5	4
2,3	1-6	2
2,4	1-6	2
3,4	1-6	4
1,2,3	6	1
1,2,3	1-5	2
1,2,4	6	1
1,2,4	1-5	2
1,3,4	6	1
1,3,4	1-5	4
2,3,4	1-6	2
1,2,3,4	6	1
1,2,3,4	1-5	2

Subroutine ZNEOUT contains the code which selects the appropriate precipitation type and transforms the component winds into the correct format for the combined zone matrix. The three categories of precipitation type are 1 for freezing, 2 for frozen, and 3 for liquid precipitation. Rather than averaging (which often would be meaningless), the precipitation type for each projection is chosen based on the averaged forecasts of three other weather elements for the combined zone grouping. Table 5 displays the ranges of probability of frozen precipitation, probability of freezing precipitation, and 3-hourly temperature which are used to select the precipitation type category.

The wind speed and u and v components of wind are simply averaged and rounded to the nearest integer. Wind direction in tens of degrees is calculated from the u and v components. ZNEOUT correctly positions wind and all other weather elements in the combined zone matrix, which is then used by the CWF software to produce a single worded forecast.

Table 5. The precipitation type forecast for a combined zone matrix based on averaged forecasts of probability of frozen precipitation, probability of freezing precipitation, and 3-hourly temperature.

POF Forecast	POZR Forecast	3-h Temp Forecast	Precip Type Forecast
0-34	0-100	$\geq$34	3
0-34	22-100	$\leq$33	1
0-34	0-21	$\leq$33	3
35-50	0-100	$\geq$34	3
51-65	0-100	$\geq$34	2
35-65	22-100	$\leq$33	1
35-65	0-21	$\leq$33	2
66-100	0-100	unlimited	2

4. SUMMARY

Computer worded forecasts are operationally available for stations and public zones twice daily. CWF's which are generated for zones require two significant computational steps beyond those in CWF's for stations: interpolation and combination. Interpolation of MOS guidance and temperature climatology to zone centers from surrounding stations is necessary because values are available at stations only. Combining zones with similar MOS forecasts into a single worded forecast parallels the efforts of WSFO forecasters; indeed, the code attempts to group zones in the same manner a forecaster would for given meteorological conditions. These two techniques are crucial in providing CWF's for zones. This paper describes the methods of interpolation and combination and presents several examples to assist in understanding them.

REFERENCES

Bermowitz, R. J., and R. L. Miller, 1984: A field evaluation and some recent changes in the computer worded forecast. Preprints Tenth Conference on Weather Forecasting and Analysis, Clearwater Beach, Amer. Meteor. Soc., 92-97.

_____, M. M. Heffernan, and H. R. Glahn, 1980: Computer worded forecasts: An update. Preprints Eighth Conference on Weather Forecasting and Analysis, Denver, Amer. Meteor. Soc., 453-456.

Glahn, H. R., 1978: Computer worded public forecasts. NOAA Technical Memorandum NWS TDL-67, National Oceanic and Atmospheric Administration, U.S. Department of Commerce, 24 pp.

_____, 1979: Computer worded forecasts. Bull. Amer. Meteor. Soc., 60, 4-11.

Heffernan, M. M., and H. R. Glahn, 1979: User's guide for TDL's computer worded forecast program. TDL Office Note 79-6, National Weather Service, NOAA, U.S. Department of Commerce, 44 pp.

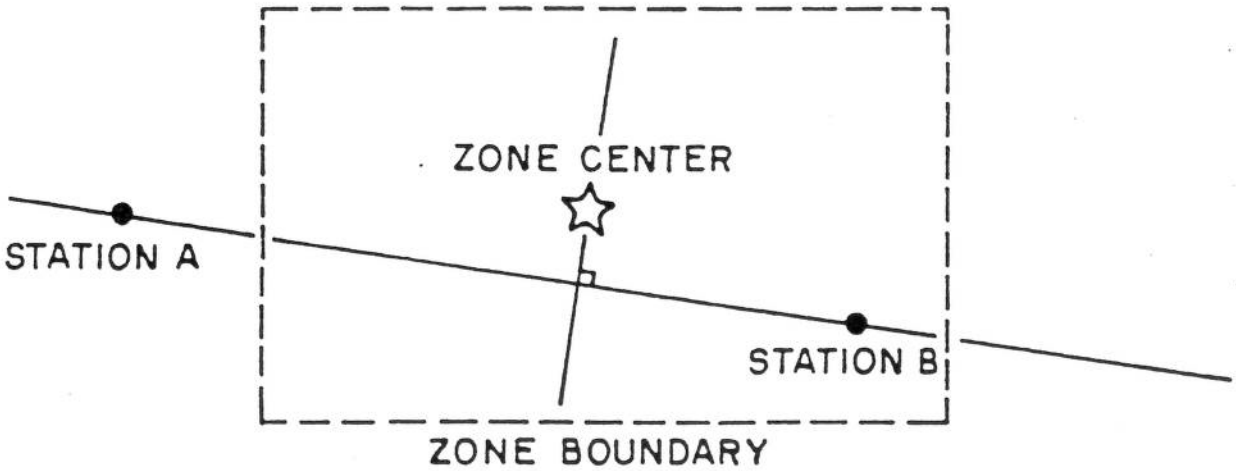

Figure 1. The linear interpolation technique for the case of two stations.

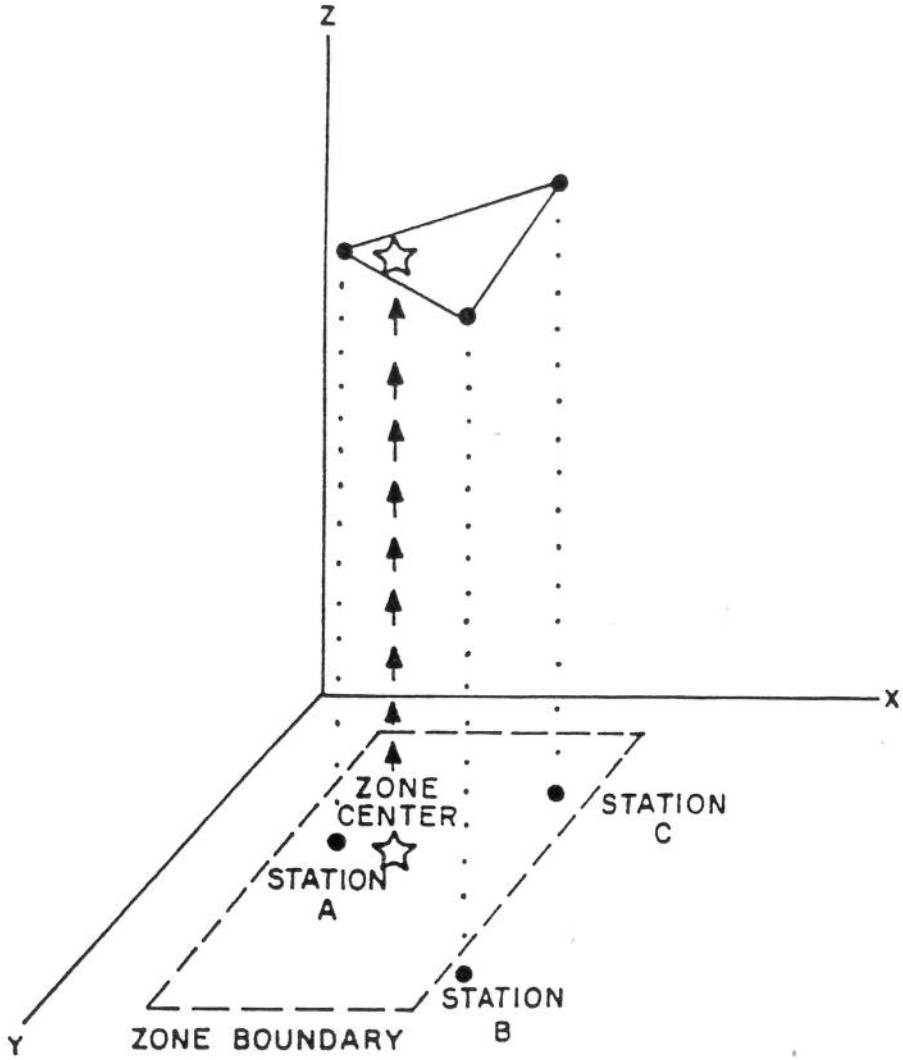

Figure 2. The linear interpolation technique for the case of three stations.

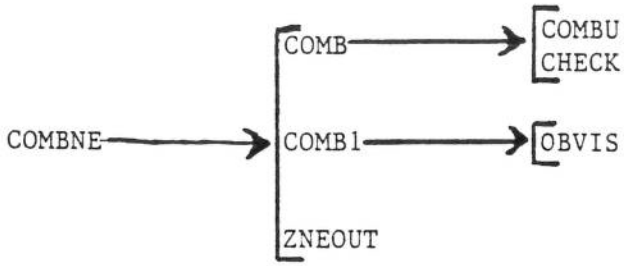

Figure 3. The software structure of subroutines used in zone combination.

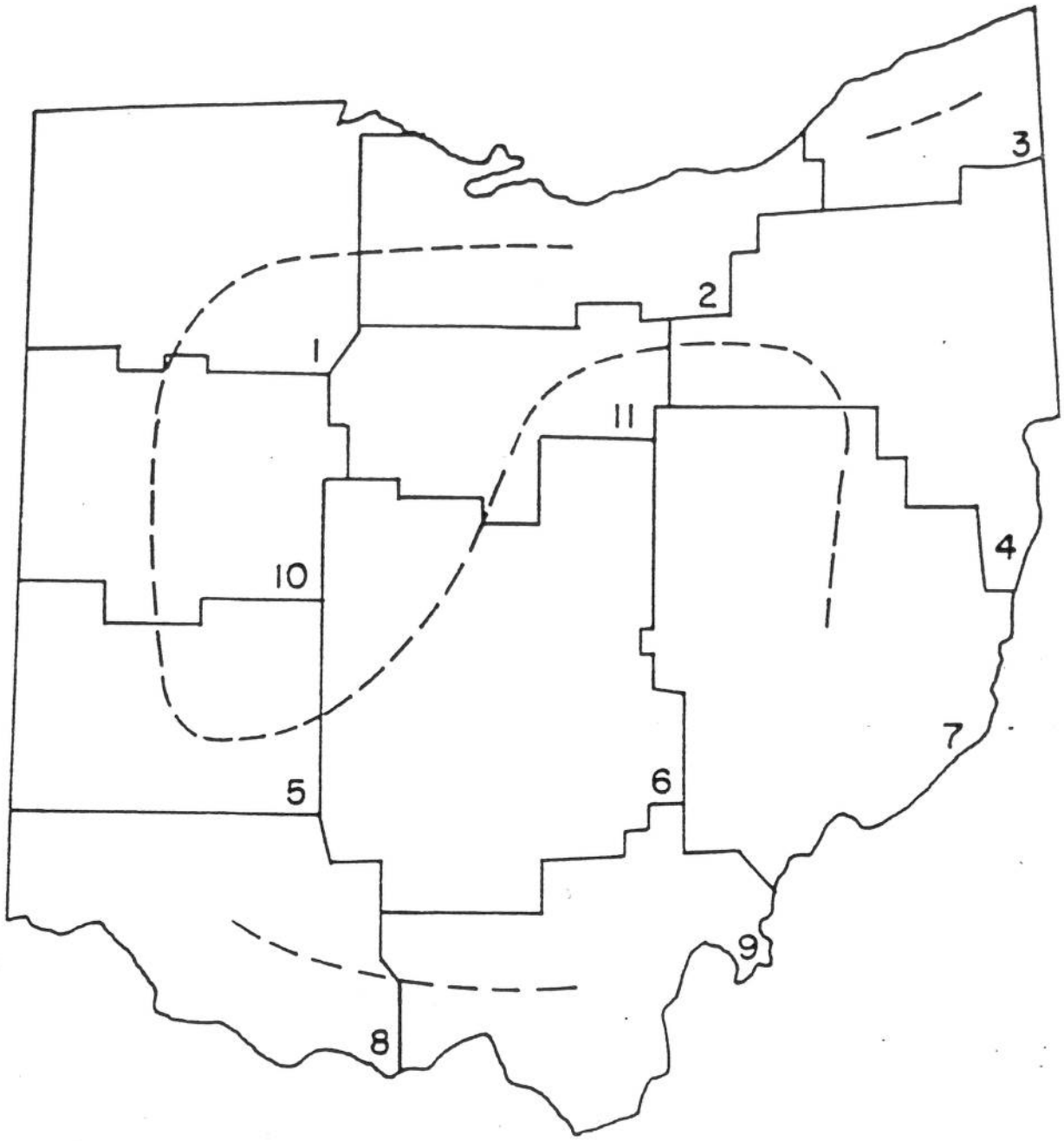

A LIST	B LIST
3	2,1
8,9	10,5,6
	11
	4,7

Figure 4. A graphical example of the rule that zones which are placed next to each other on the combining lists should be geographically adjacent.

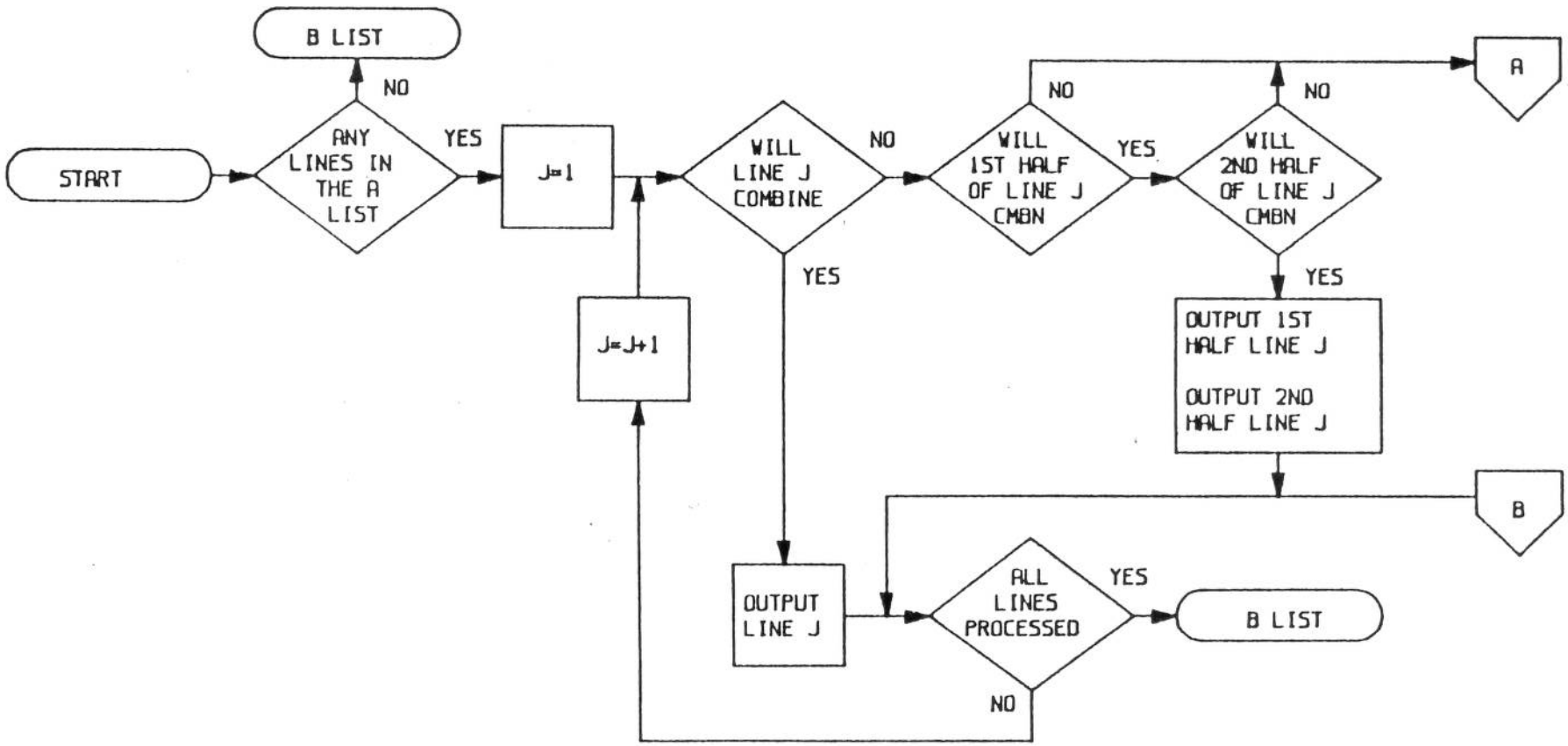

Figure 5. Flow chart of decisions concerning combining based on the A list (continued on next page).

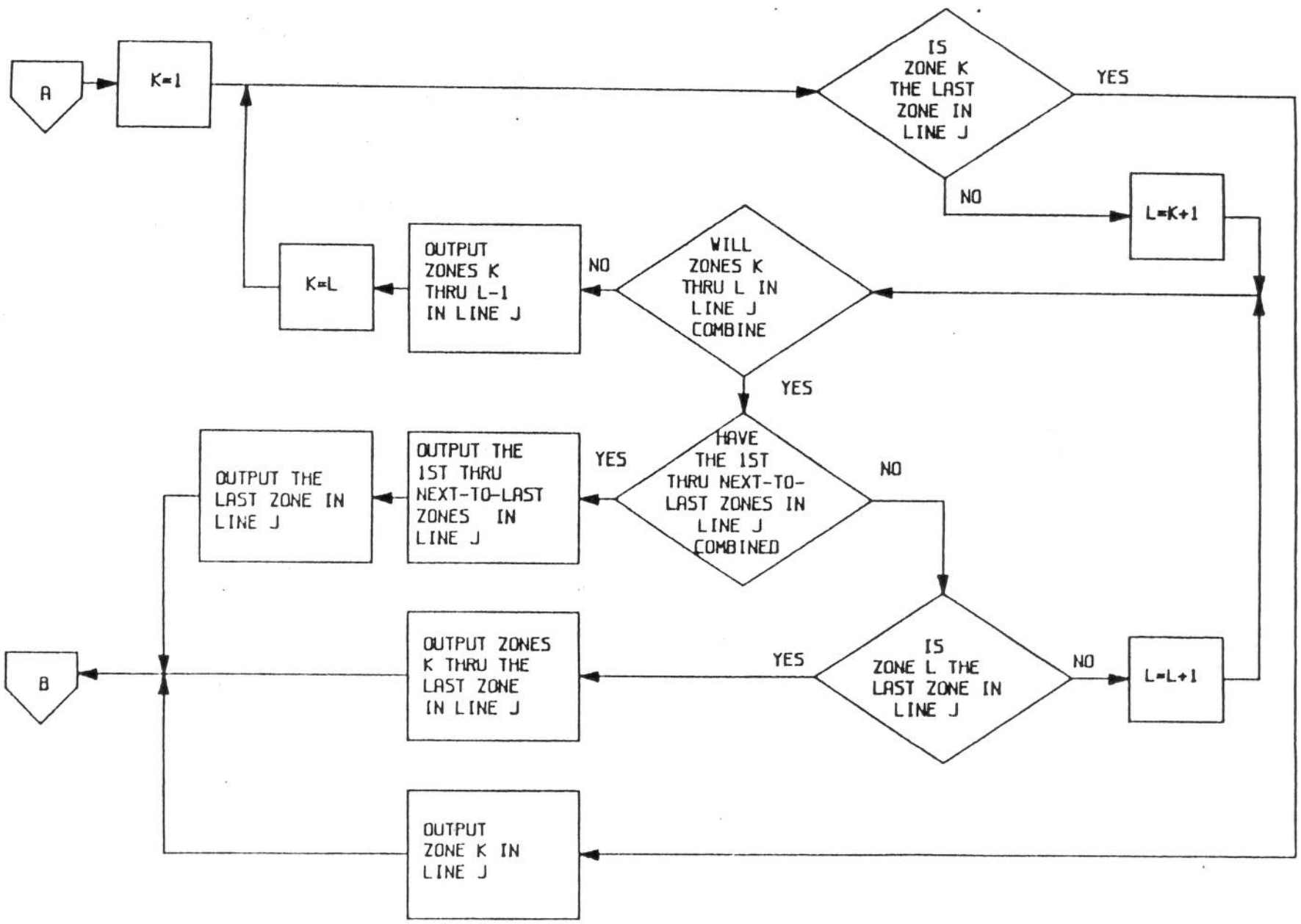

Figure 5. (Continued.)

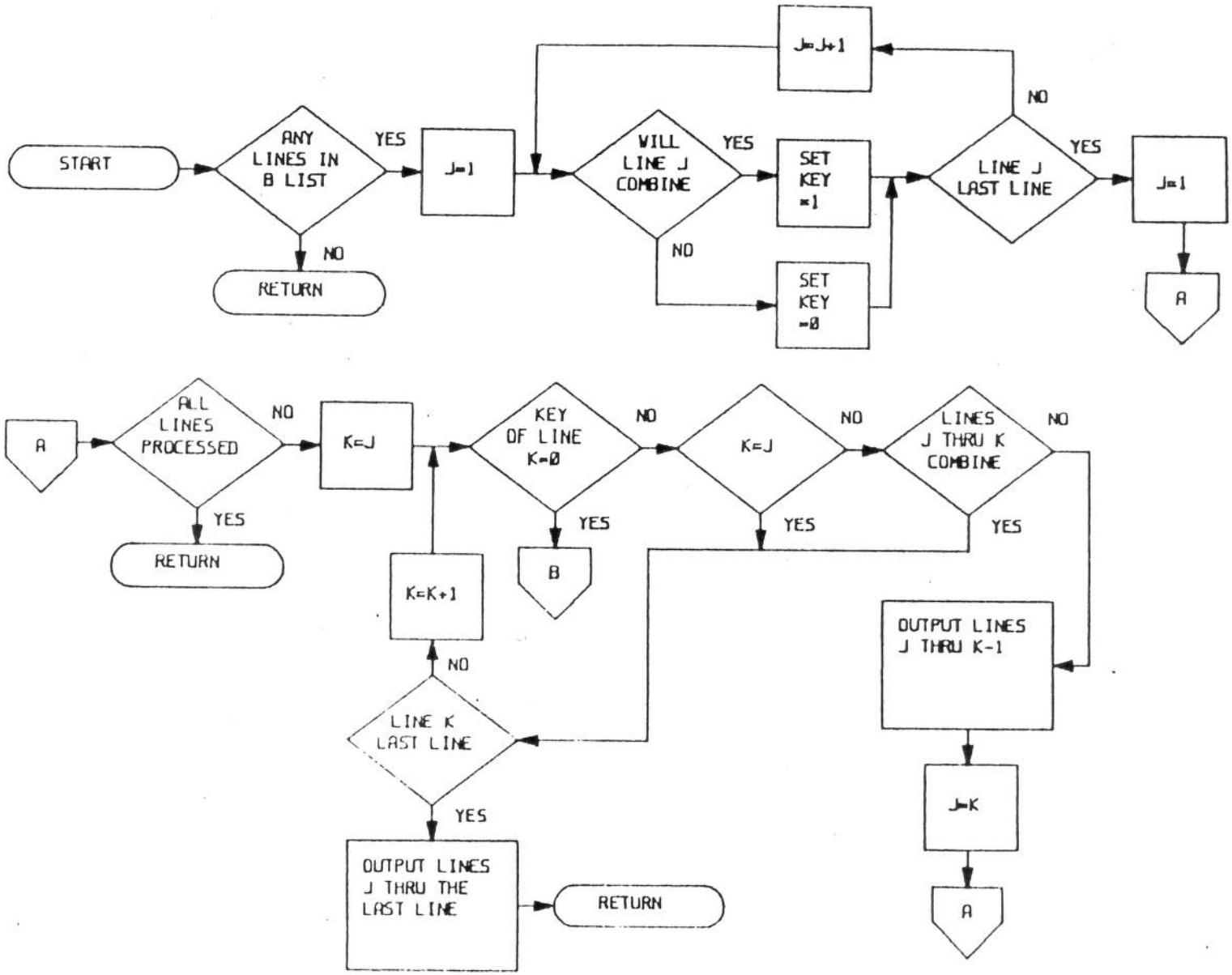

Figure 6. Flow chart of decisions concerning combining based on the B list (continued on next page).

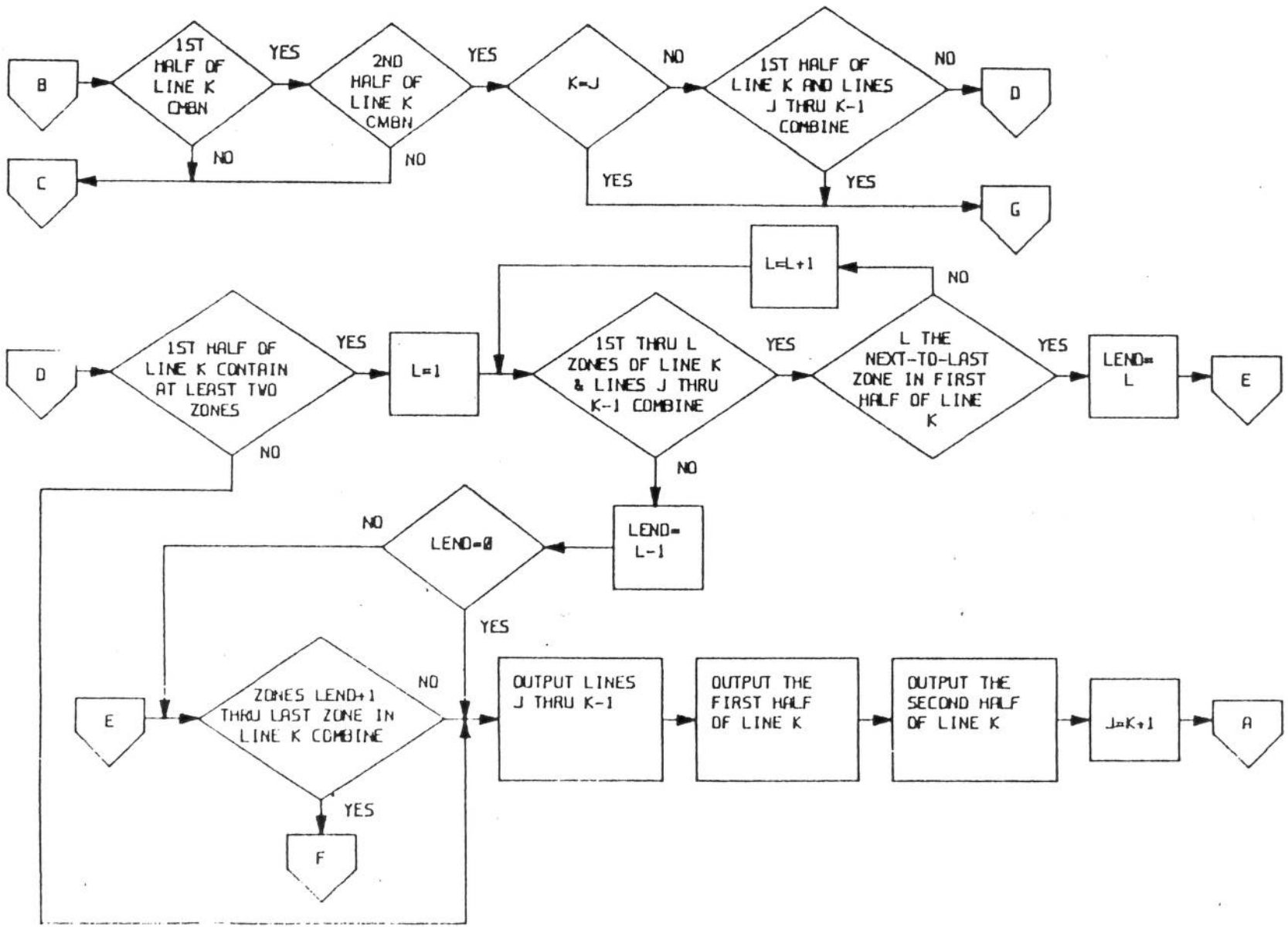

Figure 6. (Continued.)

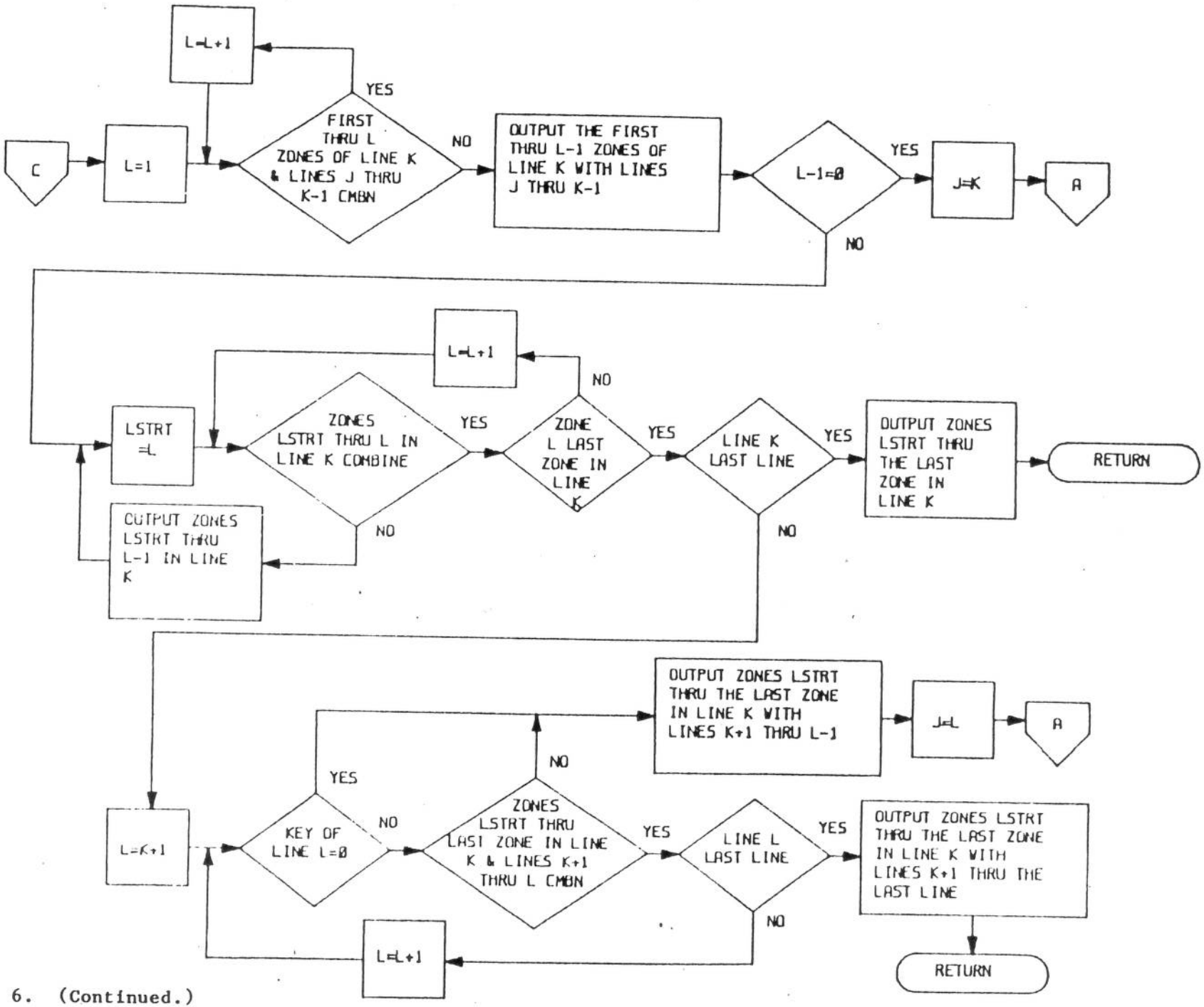

Figure 6. (Continued.)

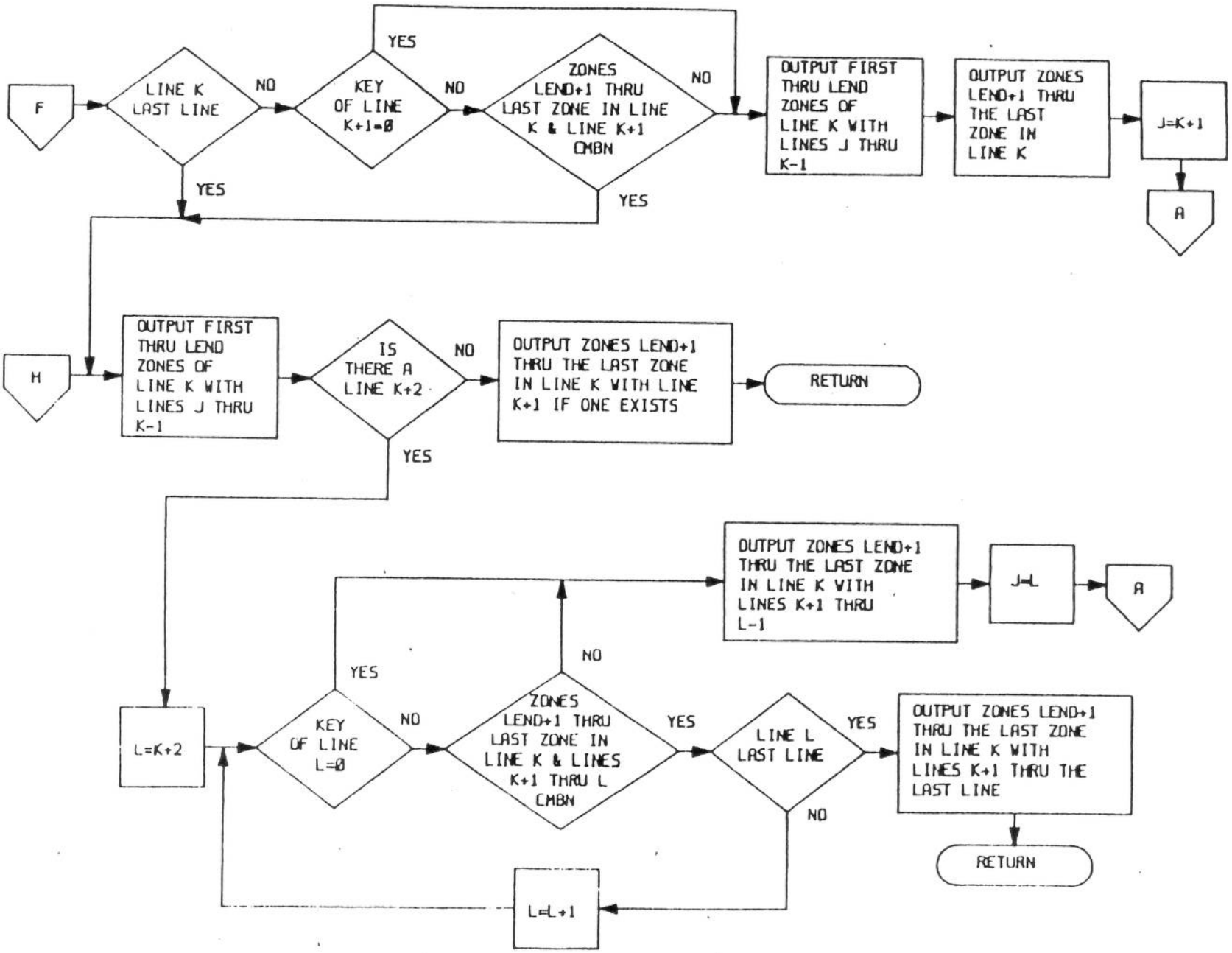

Figure 6. (Continued.)

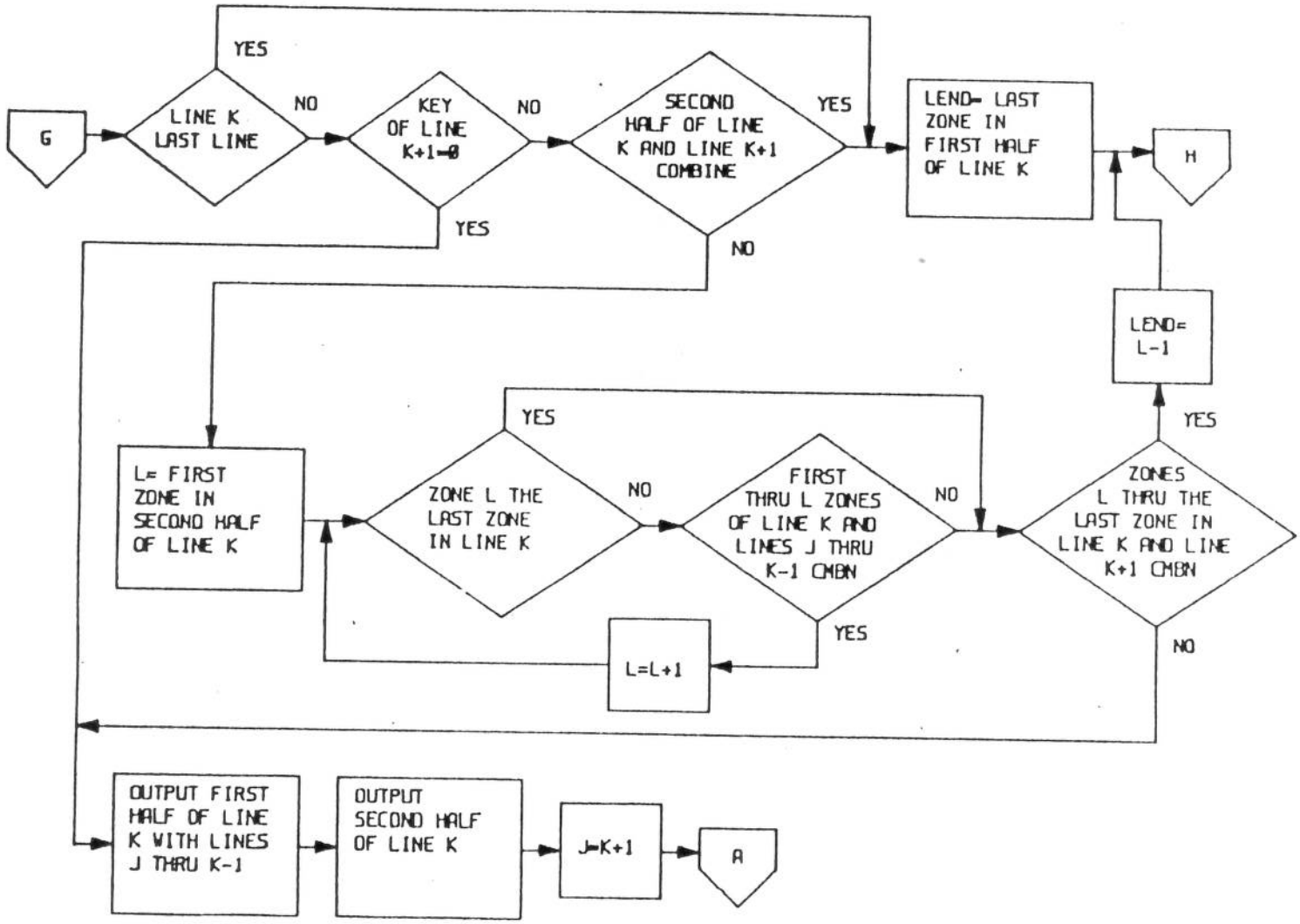

Figure 6. (Continued.)