FILE COPY

NOAA Technical Memorandum NMFS

N.M.F.S. SOUTHWEST FISHERIES CENTER
LA JOLLA
JUN 22 1987
LIBRARY

DECEMBER 1985

TUNA HANDLING and REFRIGERATION on PURSE SEINERS

Frank D. Burns

NOAA-TM-NMFS-SWR-011

U.S. DEPARTMENT OF COMMERCE
National Oceanic and Atmospheric Administration
National Marine Fisheries Service
Southwest Region

NOAA Technical Memorandum NMFS

The National Oceanic and Atmospheric Administration (NOAA), organized in 1970, has evolved into an agency which establishes national policies and manages and conserves our oceanic, coastal, and atmospheric resources. An organizational element within NOAA, the Office of Fisheries is responsible for fisheries policy and the direction of the National Marine Fisheries Service (NMFS).

In addition to its formal publications, the NMFS uses the NOAA Technical Memorandum series to issue informal scientific and technical publications when complete formal review and editorial processing are not appropriate or feasible. Documents within this series, however, reflect sound professional work and may be referenced in the formal scientific and technical literature.

This manual was developed and prepared by Living Marine Resources, Inc. in cooperation with the United States tuna industry and the United States Department of Commerce, National Oceanic and Atmospheric Administration, National Marine Fisheries Service, under Saltonstall-Kennedy Act Grant NA84AA-H-SK092.

The Ammonia Safety information in Appendix B was reprinted, with revisions, by permission of Cambpell Industries, San Diego, California.

NOAA Technical Memorandum NMFS

This TM series is used for documentation and timely communication of preliminary results, imterim reports, or special purpose information; and have not received complete formal review, editorial control, or detailed editing.

AUGUST 1985

TUNA HANDLING and REFRIGERATION on PURSE SEINERS

Frank D. Burns
Living Marine Resources, Inc.
7169 Construction Court
San Diego, California 92121

NOAA-TM-NMFS-SWR-011

U.S. DEPARTMENT OF COMMERCE
Malcolm Baldrige, Secretary
National Oceanic and Atmospheric Administration
Anthony J. Calio, Administrator
National Marine Fisheries Service
William G. Gordon, Assistant Administrator for Fisheries

Table of Contents

CHAPTER		PAGE
I	INTRODUCTION	I-1
II	REFRIGERATION SYSTEM ON A TUNA SEINER	II-1
	VESSEL LAYOUT	1
	BRINE TRANSFER SYSTEM	2
	REFRIGERATION SYSTEM COMPONENTS	5
	Expansion Valves	5
	Shut-off Valves	11
	Coils	11
	Suction Headers and Manifolds	14
	Back Pressure Regulator	14
	Suction Accumulator	18
	Safety Relief Valves	20
	Ammonia Compressors	22
	Oil Separator	26
	Check Valve	28
	Oil Trap	28
	Condenser	28
	Receiver	32
	Pressure Gauges	34
	Temperature Sensors	34
III	OPERATION OF A REFRIGERATION SYSTEM	III-1
	ROUTINE MAINTENANCE	1
	ADJUSTING AMMONIA FLOW	1
	SUCTION PRESSURE	3
	DISCHARGE PRESSURE	6
	USE OF SUCTION HEADERS	6
	OPERATION DURING FISH HANDLING	8
	Chilling Sea Water and Brine	9
	Chilling the Fish	11
	Freezing the Fish	11
	Drying the Wells	12
	Preparing to Unload	12
IV	TUNA-HANDLING PROCEDURES	IV-1
	PREPARATION FOR STORAGE	1
	Cleaning the Wells	1
	Preparing the Brine	2
	Characteristics of Brine	5
	Measuring Brine Salinity	7
	Sequence of Well Loading	8
	CATCHING THE FISH	9

Table of Contents (continued)

CHAPTER		PAGE
	STORAGE IN RSW	10
	STORAGE IN BRINE	14
	PACKING THE WELLS	17
	BRINING THE WELLS	21
	FREEZING THE FISH	24
	DRYING THE WELLS	26
	UNLOADING THE FISH	33
V	TUNA QUALITY CHANGES	V-1
	GENERAL DESCRIPTION	1
	BIOLOGICAL EFFECTS	1
	Histamine	2
	Honeycomb	5
	Off-Colors	7
	EFFECTS OF FREEZING	8
	Salt Penetration	8
	Protein Denaturation	11
	Drip Loss	11
	Color Change	11
	Oxidative Rancidity	12
	EFFECTS OF HANDLING	12
	CONTAMINATION	13
	Fuel Oil	13
	Ammonia	14
	Metal Stain	14
VI	QUALITY EVALUATION	VI-1
	ORGANOLEPTIC TESTS	1
	CHEMICAL TESTS	1
VII	THE EFFECT OF TUNA QUALITY ON VALUE	VII-1
VIII	SUMMARY	VIII-1
	GENERAL PROCEDURES	1
	REFRIGERATION SYSTEM OPERATION	1
	PREPARATION	2
	STOWING	2
	PACKING	3
	BRINING	3
	DRYING	4
	UNLOADING	4
	HANDLING FISH FROM LONG SETS	4

Table of Contents (continued)

APPENDIX		PAGE
A	FUNDAMENTALS OF REFRIGERATION	A-1
	HEAT	1
	TEMPERATURE	1
	SPECIFIC HEAT	1
	LATENT HEAT	4
	PRESSURE	5
	INTERACTION OF PRESSURE AND TEMPERATURE	8
	PROPERTIES OF AMMONIA	9
	SIMPLIFIED REFRIGERATED SYSTEM	9
	COMPLETE REFRIGERATION SYSTEM	9
	NORMAL OPERATING CONDITIONS ON A TUNA SEINER	15
B	AMMONIA SAFETY INFORMATION	B-1
	WARNING PROPERTIES	1
	FIRE AND EXPLOSION HAZARDS	1
	HEALTH HAZARDS	2
	Local Effects	2
	Chronic Toxicity	2
	SAFETY EQUIPMENT	4
	Eye Protection	4
	Respiratory Protection	4
	FIRST AID	5
	Contact with Skin and Mucous Membranes	6
	Contact with Eyes	6
	Taken Internally	7
	Nose and Throat	7
	Inhalation	7
	Asphyxiation	8
	First Aid Supplies	9
	ACTION IN THE EVENT OF A LEAK	9
	Leak Detection	9
C	SAMPLE WELL-HANDLING FORM	C-1
D	ADJUSTING BRINE SALINITY	D-1
E	FABRICATION AND USE OF THERMOCOUPLES	E-1
	PROTECTING THE TEMPERATURE INDICATOR	1
	FABRICATION OF THERMOCOUPLES	1
	USE OF THERMOCOUPLES	3
	CALIBRATION OF THE SYSTEM	6
	EQUIPMENT LIST	6
LITERATURE CITED		LC-1

List of Figures

FIGURE

2-1 General Arrangement of a 1,200 Ton Purse Seiner
2-2 Brine Transfer System
2-3 Tuna Seiner Refrigeration System
2-4 Hand Expansion Valve
2-5 Automatic Expansion Valve
2-6 Shut-off Valve
2-7 Arrangement of Coils in Fish Well
2-8 Back Pressure Regulator
2-9 Ammonia Strainer
2-10 Suction Accumulator
2-11 Safety Relief Valve
2-12 Ammonia Compressor
2-13 Oil Separator
2-14 Box-Type Condenser
2-15 Receiver

3-1 Compressor Refrigeration Capacity and Power Required at Different Suction Pressures
3-2 Compressor Refrigeration Capacity and Power Required at Different Condensing Pressures

4-1 Relationship of Freezing Point to Salinity of Brine
4-2 Temperature of RSW, Brine and the Backbone of Tuna During Chilling and Freezing
4-3 Temperature of Brine and the Backbone of Tuna During Chilling and Freezing
4-4 Percent of Water in Fish Muscle Frozen at Various Temperatures
4-5 Temperature of Brine and the Backbone of Tuna During Freezing and Storage in a Dried Well
4-6 Temperature in the Interior and on the Surface of a Well During Storage of Tuna
4-7 Temperature in the Interior and on the Surface of a Well During Storage of Tuna

5-1 Histamine Content of Tuna by Time Held in Sea Water
5-2 Honeycomb Scores of Tuna by Time Held in Sea Water
5-3 Salt Content of Tuna by Time Held in Brine

A-1 Temperature Conversion Formulas and Scale
A-2 Heat Removed from Tuna During Chilling and Freezing
A-3 Relationship Between Pressure and Evaporating Temperature of Ammonia
A-4 Simplified Ammonia Refrigeration System
A-5 Schematic Diagram of a Refrigeration System

E-1 Thermocouple Placement

List of Tables

TABLE

2-1 Compressor Refrigeration Capacities and Power Requirements

4-1 Sodium Chloride Brine Characteristics

6-1 Organoleptic Quality Evaluation of Raw Tuna

A-1 Conversion Table

A-2 Heat Removed from One Ton of Tuna During Chilling and Freezing

A-3 Thermodynamic Properties of Ammonia

B-1 Effects of Ammonia in Air

Acronyms and Abbreviations

BPR	Back Pressure Regulator
BTU	British Thermal Units
FDA	Food and Drug Administration
fp	Freezing Point
GPM	Gallons Per Minute
mg	Miligram
PSI	Pounds per Square Inch
PSIA	Pounds per Square Inch Absolute
PSIG	Pounds per Square Inch Gauge
RSW	Refrigerated Sea Water
RPM	Revolutions Per Minute
^{o}SAL	Salometer Degrees
TMAO	Trimethylamine Oxide
USTF	United States Tuna Foundation

Acknowledgements

Representatives from all branches of the tuna industry have contributed to this manual. Space does not permit acknowledging all of them here, but the following deserve special recognition for their assistance in editing sections of the manuscript.

John Adsit, Quality Refrigeration Company, Inc.
Jack Appelt, Quality Refrigeration Company, Inc.
Dr. Jerry Babbitt, National Marine Fisheries Service
Jim Boyd, Campbell Industries
Anthony Burich, Chief Engineer
Harold F. Cary, United States Tuna Foundation
Roy Cottrell, Campbell Industries
John DeBeer, Van Camp Seafood Company, Inc.
Michael Dunn, Mitsubishi (MC) Foods, Inc.
Lonnie Fiero, Chief Engineer
O. E. Kerns, Jr., United States Tuna Foundation
Dr. Peter Lerke, National Food Processors Association
Harold Medina, Fish Captain and Vessel Owner
Jack Medina, Marine Engineer/Refrigeration Consultant
William Melzer, Star-Kist Foods, Inc.
James Micik, Van Camp Seafood Company, Inc.
Dr. William Reinke, Van Camp Seafood Company, Inc.
Dan Sullivan, Bumble Bee Seafoods
Tim Welch, Vilter Manufacturing Corporation
Bert Youngen, Pan Pacific Fisheries
Staff, Living Marine Resources, Inc.

CHAPTER I
INTRODUCTION

One of the principal responsibilities of the chief engineer on a tuna vessel is to preserve the quality of raw tuna. To maintain the quality of such a perishable food requires a comprehensive knowledge of: refrigeration principles, the capabilities of the vessel's refrigeration system, the characteristics of quality changes in fish, and the effects of on-board handling on tuna quality; and the ability to apply this knowledge to the rapidly changing conditions on the vessel during a fishing trip.

The purpose of this manual is twofold: (1) to describe the various fish-handling techniques and the operation of the refrigeration system used to preserve tuna on modern United States purse seiners, and (2) to identify those procedures that best maintain tuna quality. The manual has been written primarily for the chief engineer, but includes sufficient background information, on the fundamentals of refrigeration, the refrigeration system, fish-handling techniques, the nature of fish quality changes, and the evaluation of raw fish quality, to be useful to people in all branches of the tuna industry.

The preservation technique discussed is brine immersion freezing. This technique involves storing fish in brine (made by adding salt to sea water) and reducing the temperature of the brine until the fish (but not the brine) are frozen. This method can satisfactorily preserve a vessel's catch despite (1) the high sea water and fish temperatures encountered, ranging up to 90°F or higher, (2) the extreme variability of catch rates, which can be in excess of 200 tons per set and 1,000 tons per week, and (3) the possibly long (four months or more) storage time. Two

potential problems associated with brine immersion freezing are (1) excessive salt uptake by the flesh, and (2) undesirable changes in color, texture, and flavor due to slow freezing or prolonged storage in brine.

Brine immersion freezing was adopted by the United States fleet in the late 1930s, after the baitboats Northwestern and American Beauty demonstrated the effectiveness of this method. Prior to that time, catches were held in ice or refrigerated sea water (RSW). Vessels using either of these storage media could not preserve fish for more than about 30 days, and often large portions of catches were rejected for canning. Despite dramatic changes in (1) the size of tuna vessels, from less than 100 tons to over 1,000 tons capacity, (2) the method of fishing, from pole and line to purse seine, and (3) the area of operation, from near-shore to the high seas, brine immersion freezing has remained the preservation method of choice among United States tuna fishermen for almost 50 years.

Factors affecting raw tuna quality during on-board handling and brine immersion freezing have been studied (and data have been collected) intermittently. Much of the industry's present understanding of tuna preservation is based on the research conducted in the late 1930s by scientists of the George Williams Hooper Foundation, University of California, San Francisco, on some of the first tuna vessels using brine immersion freezing. World War II interrupted this research, but it was reinstated in the 1950s through the efforts of the industry and the Bureau of Commercial Fisheries. One of the notable achievements of the industry-supported work was the 1959 publication by the California Fish Canners Association of A Manual of Refrigeration Practice for Tuna Clippers, written by S. Lassen and J. Rawlings.

During the 1960s, the government effort was terminated and industry studies were reduced as the influx of new vessels and better equipment resulted in a general improvement in tuna quality. However, as larger vessels (with larger storage wells) were added to the fleet, the amount of marginal quality tuna began to increase. This situation, in addition to increasing consumer demand for low-salt products and the Food and Drug Administration's (FDA) policy to moderate the level of salt in the American diet, caused the tuna industry to fund, through the United States Tuna Foundation (USTF), a two-year research project on the factors affecting fish quality on tuna seiners. This study was conducted by Living Marine Resources, Inc., an independent fisheries research company, during three commercial fishing trips in 1982 and 1983. Each trip was on a different modern super seiner. The author conducted the at-sea research during this project. The results form the basis for this manual; however, all available sources of information, particularly the experience of chief engineers and previous studies on tuna vessels, were consulted. The final report of the USTF study is listed under Patterson and Burns, 1984 in the Literature Cited section of this manual, and contains an extensive bibliography.

The manual is divided into separate chapters; however, much of the information is inter-related, and therefore a detailed table of contents has been included. Consulting the table of contents will enable the reader to follow a particular subject in the text.

CHAPTER II
REFRIGERATION SYSTEM ON A TUNA SEINER

VESSEL LAYOUT

The United States fleet of tuna purse seiners includes vessels with a variety of fish-carrying capacities, designed by different naval architects and built by various shipyards. However, these vessels carry similar equipment, and many design similarities have evolved over the years. Thus, similar procedures are followed in operating their refrigeration systems.

Figure 2-1 (the fold-out) shows the arrangement of equipment on the engine-room deck and main deck (also called the "wet deck") of a modern purse seiner.

Purse seiners built in the early 1980s have a steel hull, an aluminum pilot house, a mid or aft placement of the main engine, an overall length of about 225 feet, a 40-foot beam, and a 19-foot draft. Most have a rated tuna carrying capacity of 1,200 short tons. The fish are held in 15 to 19 refrigerated wells arranged in pairs, one port and one starboard, with the exception of a single well in the bow. In mid-engine vessels the forward pairs of wells are separated by a passageway called the "service alley." Between the aft pairs of wells is the "shaft alley," through which runs the propeller shaft. On aft-engine boats the passage between the pairs of wells is called the "pipe alley." The term pipe alley is used in the remainder of this manual (Figure 2-1 shows an aft-engine vessel).

The fish wells range in capacity from about 40 tons to over 100 tons. All sides of the wells are insulated with six inches of foam-in-place urethane insulation and are lined with

evaporation coils. In most wells there are two separate "banks" of coils serving different portions of the well. The unloading door is mounted near the lower edge of the bulkhead between adjacent wells.

BRINE TRANSFER SYSTEM

The brine transfer or circulating system (Figure 2-2) consists of pipes, valves, and pumps used to (1) fill wells with sea water, (2) transfer sea water or brine[1] from well to well, (3) discharge these fluids overboard, and (4) circulate them within a well. This system usually includes (1) two interconnected sets of pipes, one 4 inches and one 6 inches in diameter, (2) one centrifugal (impeller) pump with a 450-gallon per minute (GPM) capacity, called a brine circulating pump, at each well, (3) two chambers in the hull called sea chests which allow sea water to enter the system, (4) two 1,000 GPM centrifugal brine transfer pumps, one connected to each sea chest, and (5) the butterfly valves used to control brine movement through this system. In addition, connections exist that carry brine to the fish chutes and to the brine replenishing or transshipping lines.

The brine transfer system is remarkably flexible. On most vessels brine movement can usually be accomplished with one of several different pumps passing the brine through either a 4-inch or a 6-inch line. Brine can flow through non-operating pumps in either direction and through partially opened butterfly valves in two directions simultaneously; thus the system continues to

---

1. Throughout the manual the term brine refers only to sea water to which salt has been added. Although this usage is not technically correct (sea water is a brine), it is standard practice on a tuna seiner.

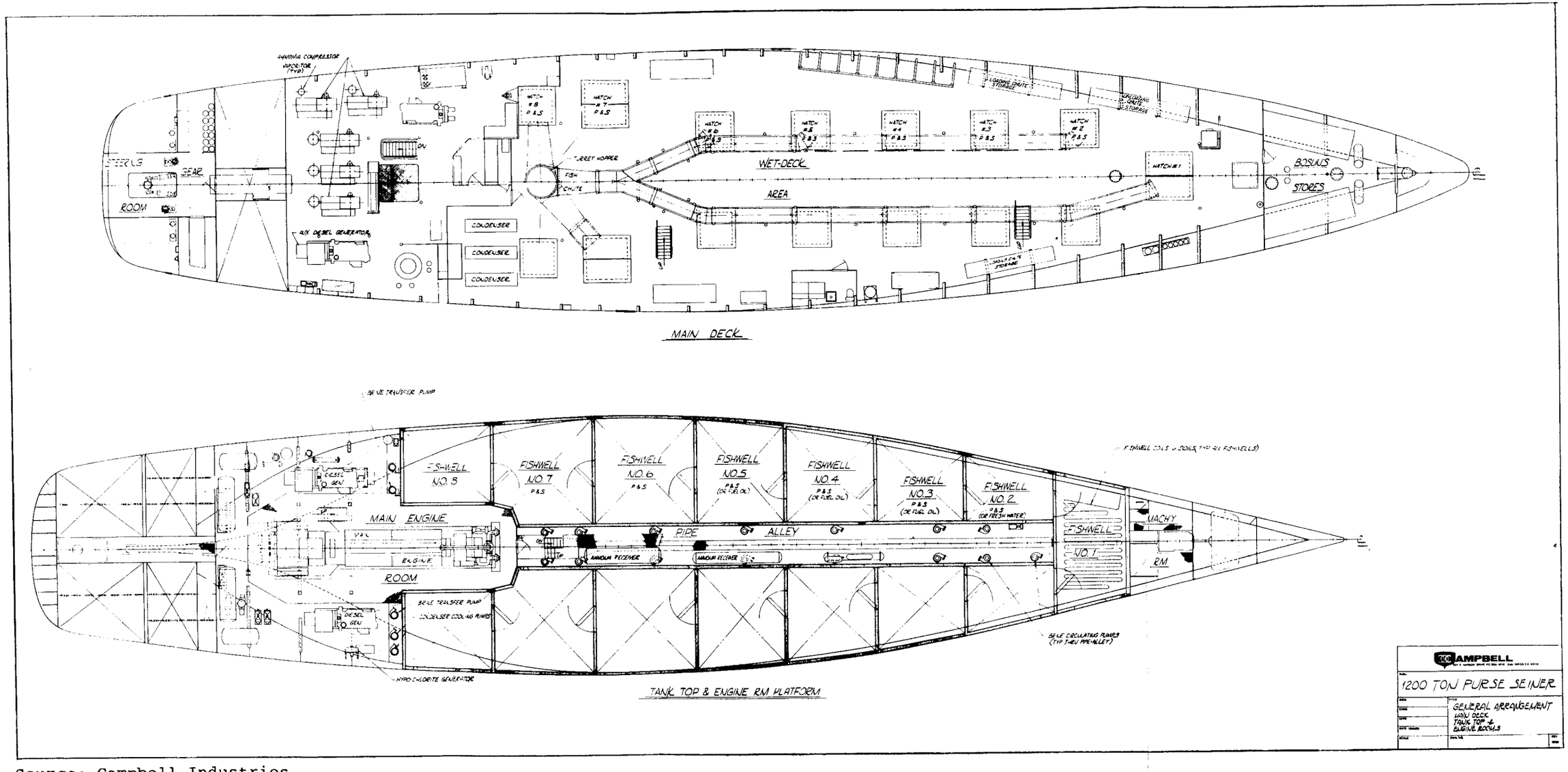

Source: Campbell Industries.

Figure 2-1. **General Arrangement of a 1,200 Ton Purse Seiner**

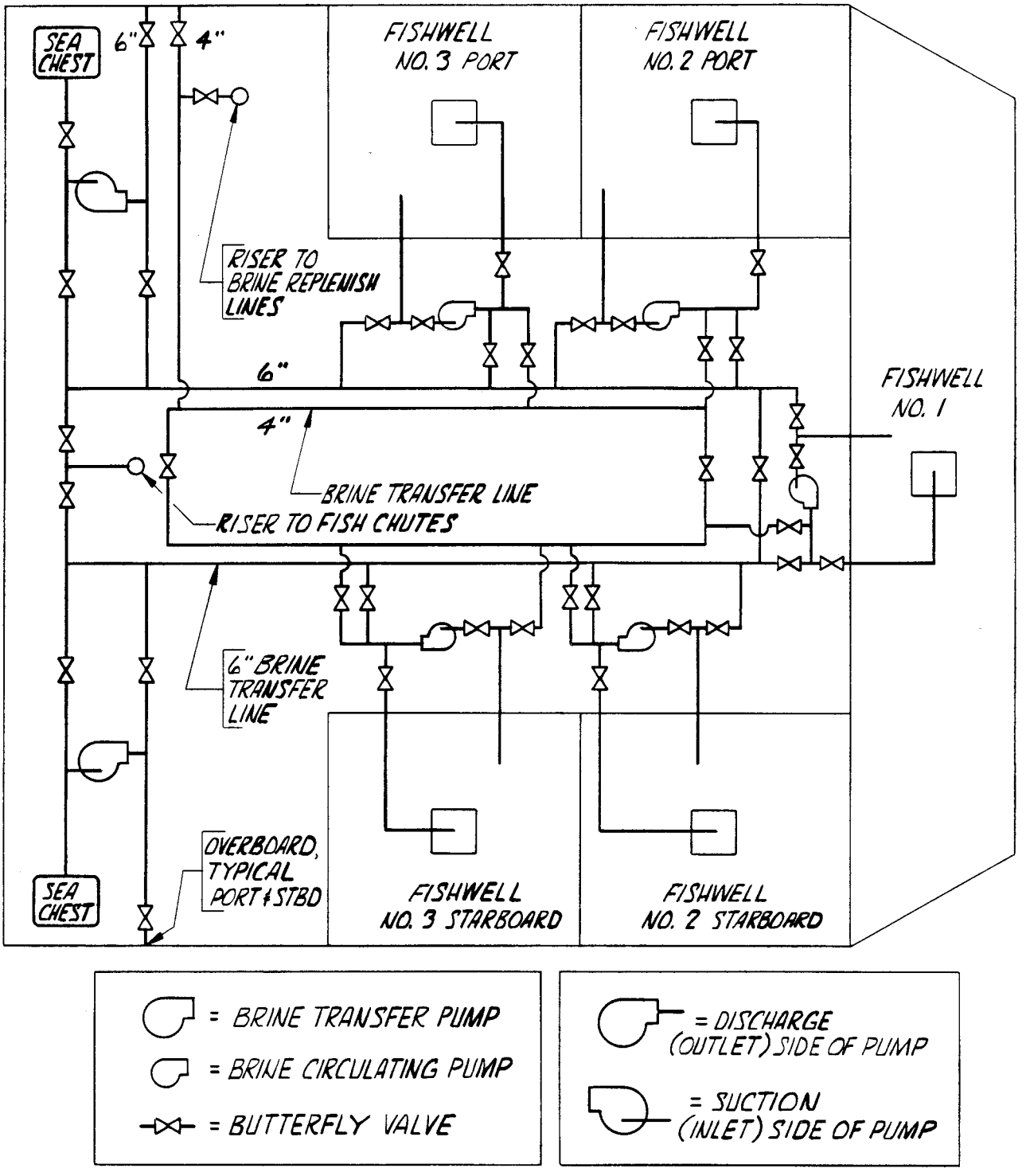

Figure 2-2. **Brine Transfer System**

function when pumps or certain non-critical valves become inoperative. The arrangement of lines and valves varies among vessels; Figure 2-2 shows only one possible arrangement. Although this figure shows only five wells, the piping and valves for additional wells would be similar.

The circulating pump improves heat transfer by keeping the brine in a well in motion. The brine is drawn from the bottom of the well through the suction pipe and pumped to the top of the well through the discharge pipe. A suction screen prevents large particles of fish from entering the suction pipe and fouling the pump.

Capabilities of a brine transfer system and preferences of chief engineers vary; however, certain procedures are generally followed. When transferring brine or sea water, it is pumped into the bottom of a well through the suction pipe rather than to the top via the discharge pipe. This increases the speed of the transfer because the head pressure on the pump is less. For the sake of speed, the brine transfer pumps are used whenever practical and particularly when filling a well with sea water or discharging overboard. The 4-inch brine transfer line is used exclusively to add brine to wells. This limits the amount of brine left in the transfer lines.

When brine or sea water sits unrefrigerated in the brine transfer lines, it develops a sour odor because of bacterial growth. The transfer lines must be flushed prior to use to avoid contaminating fish wells. This is done by opening the appropriate overboard discharge valve and pumping the system clean.

A description of the operation of the brine transfer system during fish handling is included in Chapter IV.

REFRIGERATION SYSTEM COMPONENTS

A diagram of a tuna vessel refrigeration system is shown in Figure 2-3. The manifolds, valves, and piping that give this system flexibility are not shown in the figure, but are described below. Due to variation among vessels, the exact specifications of equipment and many of the specific directions for maintenance and operation are not presented. This information is available in the manufacturers' brochures and manuals, which should be carried on board the vessel.

Expansion Valves

Expansion valves control the flow of liquid ammonia to the coils, and separate the high pressure side of the refrigeration system from the low pressure side. Each bank of coils is equipped with one hand expansion valve and one automatic expansion valve, connected with piping and shut-off valves to allow either one or both to be used.

Hand Expansion Valves. The flow of ammonia through a hand expansion valve (Figure 2-4) is controlled by raising or lowering the tapered valve face into or out of the tapered orifice in the valve seat. The matching tapers and polished metal surfaces of the valve face and seat allow the valve to stop the flow of ammonia completely or to adjust the flow minutely. The valve face is moved by turning the hand wheel which moves the valve stem along the internal threading in the valve bonnet. The bonnet contains the packing chamber and packing to prevent ammonia from leaking around the valve stem, and contains external threads for securing and tightening the packing gland nut.

Hand expansion valves are manufactured in different sizes, with the inlet and outlet ports either in-line (globe type) or

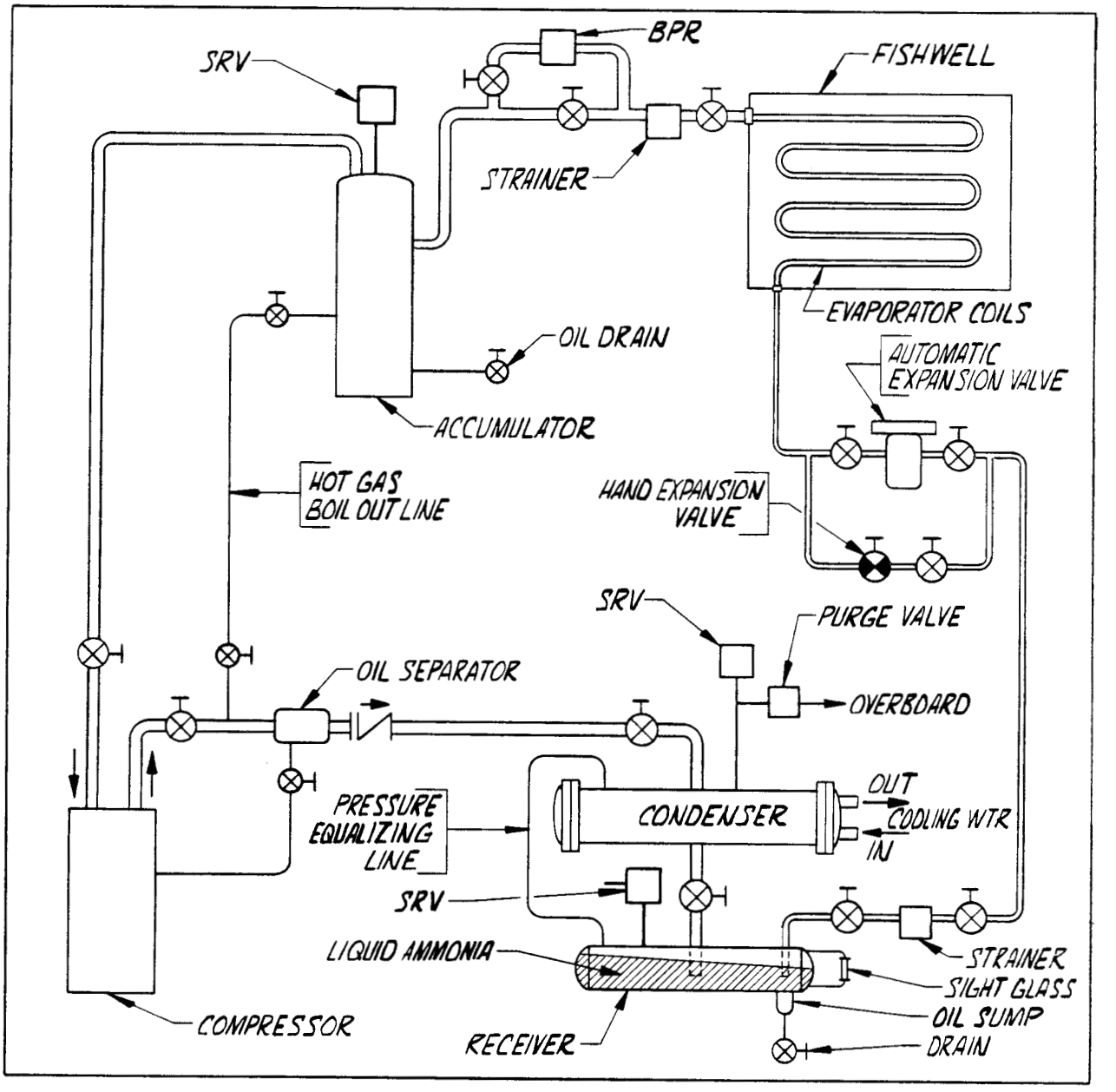

= SHUT-OFF VALVE
= CHECK VALVE
BPR = BACK PRESSURE REGULATOR
SRV = SAFETY RELIEF VALVE

Figure 2-3. **Tuna Seiner Refrigeration System**

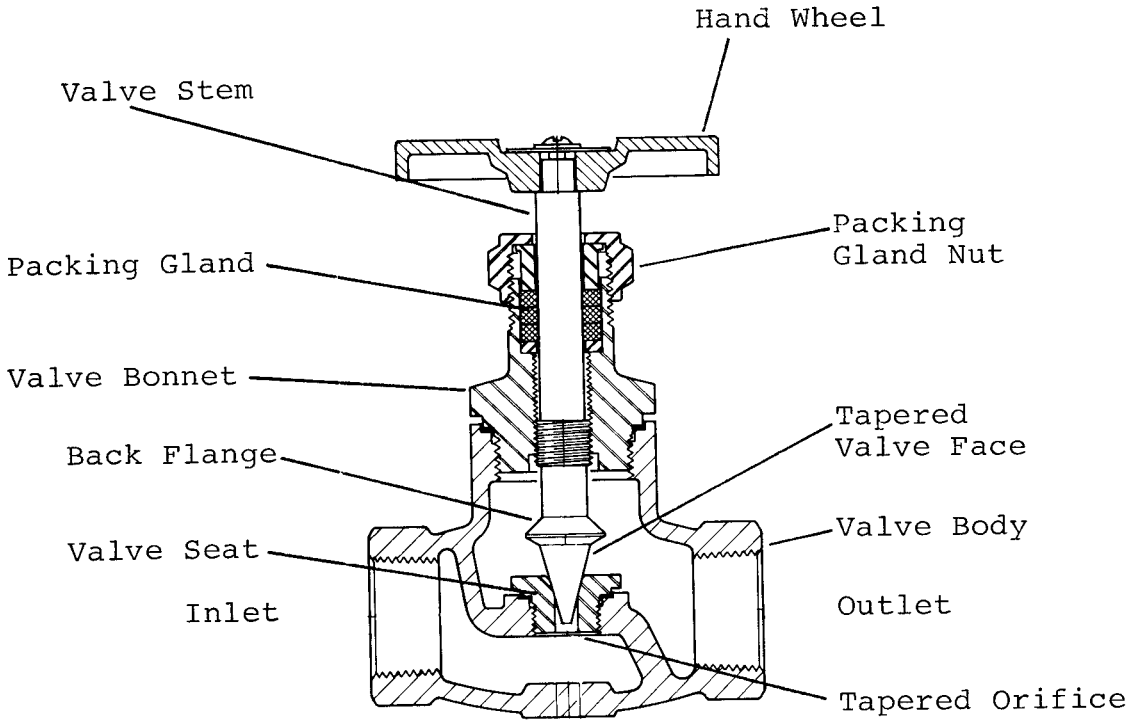

Source: Henry Valve Co.

Figure 2-4. **Hand Expansion Valve**

perpendicular (angle type) to each other. The valve stem must be coated occasionally with corrosion-preventing non-stick compound, and the packing gland nut should be tightened if an ammonia leak is detected. The high pressure liquid ammonia passing between the valve seat and valve face produces grooves in both surfaces after a few years of use. When this occurs the valve seat should be replaced if it is removable, or a temporary repair can be made by lapping the two tapered surfaces.

Automatic Expansion Valves. Automatic expansion valves (Figure 2-5) are called "thermostatic" or "thermal" expansion valves or simply "thermos," "thermals," or "automatics." The term "automatic" is used here.

The function of an automatic is to meter the flow of liquid ammonia into the coils so the ammonia leaving the coils is a superheated vapor, thereby preventing liquid ammonia from reaching the compressors. By responding to the temperature of the ammonia vapor leaving the coils and the pressure in the coils, the automatic can control the amount of superheat. Three forces (Figure 2-5B) govern the operation of the automatic: (1) the pressure (P1) in the remote bulb and power assembly, (2) the pressure (P2) in the evaporator coils, and (3) the pressure (P3) of the superheat spring. The pressure in the remote bulb and power assembly pushes down on the diaphragm and valve pin tending to open the valve. Opposed to this is the pressure in the coils and the force exerted by the superheated spring.

The pressure in the remote bulb and power assembly increases as the temperature of the ammonia vapor in the coil discharge line (the location of the remote bulb) increases. When the vapor is sufficiently superheated, this pressure is greater than the combination of the pressure in the coil and the force exerted by

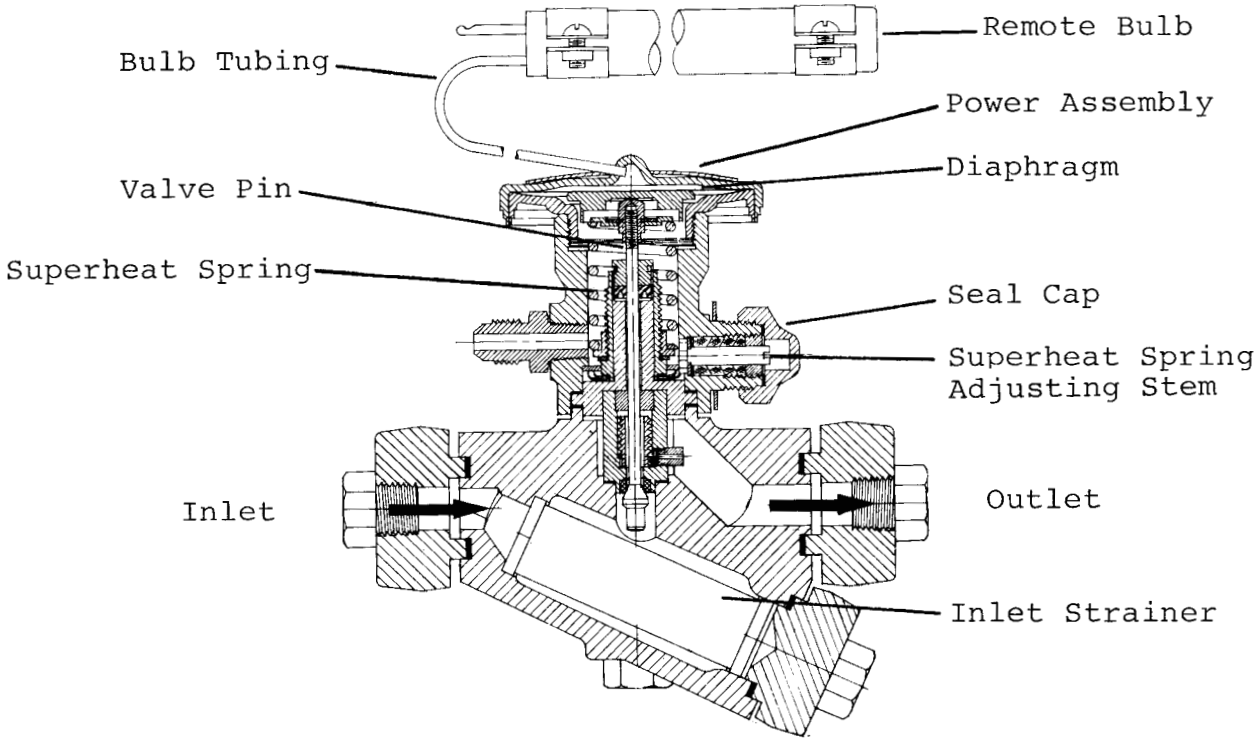

A. Interior

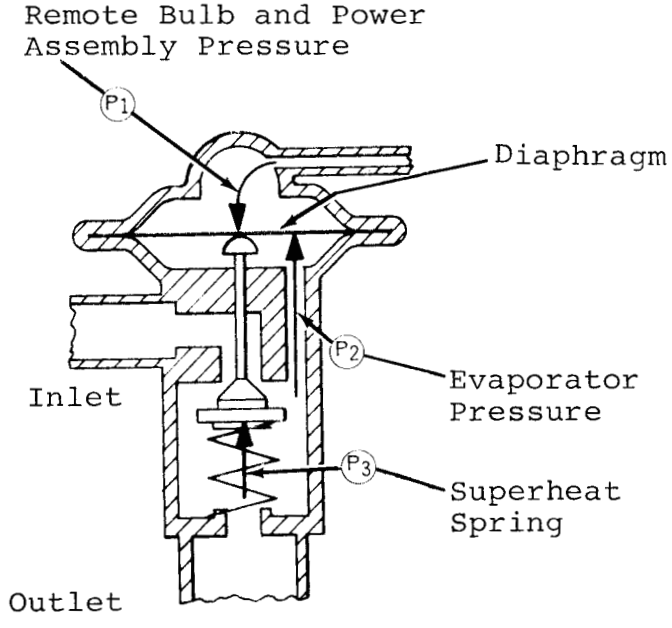

B. Operation

Source: Alco Control Division Emerson Electric Co.

Figure 2-5. **Automatic Expansion Valve**

the superheat spring, and the valve opens. Conversely, as the temperature of the gas leaving the coil decreases (less superheat), the pressure in the remote bulb and power assembly decreases, and the combined evaporator and spring pressure closes the valve.

The automatics normally found on tuna vessels are internally equalized and externally adjustable, and are equipped with a removable inlet strainer. An internally equalized automatic has an internal passage in the power assembly through which the evaporator pressure at the valve itself is exerted on the underside of the diaphragm (see P2 in Figure 2-5B). An externally equalized valve has a separate chamber on the underside of the diaphragm to which the pressure at the coil discharge (evaporator outlet) is transmitted through a small pressure equalizing line which is connected to the coil near the location of the remote bulb.

The externally adjustable feature allows the flow of ammonia and the amount of superheat to be controlled without dismantling the valve; the seal cap can be removed and the adjusting stem turned. Rotating the stem clockwise decreases refrigerant flow and increases superheat. The inlet strainer prevents small particles from clogging the valve opening. The strainer must be cleaned periodically to ensure a free flow of ammonia.

The location and mounting of the remote bulb are crucial. The bulb should be attached to a horizontal section of the coil just after it leaves the well. The path of the coil in the well should be traced to ensure that the remote bulb is on the same coil as the automatic. The coil should be cleaned thoroughly before the remote bulb is mounted. The remote bulb should be installed toward the bottom of the coil at a position of about 4

or 8 o'clock. This ensures that the bulb is affected by liquid ammonia--if the bulb is placed on the bottom of the coil, oil in the pipe will insulate the bulb and interfere with its operation. The bulb and a short section of the coil to which it is attached should be wrapped with waterproof insulation (neoprene rubber is commonly used). The bulb tubing should not be installed near other coils or locations where ice builds up, since the cold temperatures at these spots will affect the operation of the automatic. Where necessary, the bulb tubing should be insulated.

Shut-off Valves

Shut-off valves (Figure 2-6), or stop valves, are used to stop the flow of ammonia within the refrigeration system and isolate components so repairs or replacement can be accomplished without evacuating ammonia from the entire system. Shut-off valves have a flat face with a groove around the circumference. This groove is filled with lead which crushes slightly against the flat valve seat forming a seal when the valve is closed. If the valve face is damaged by closing the valve too tightly, it can be repaired. Like the hand expansion valves, these valves have a back flange that fits against the seat in the valve bonnet when the valve is fully opened to permit the addition of packing while the valve is operating under pressure.

Coils

The coils are constructed from 1-1/4-inch diameter schedule 40 welded seam steel pipe that is hot-dip galvanized on the exterior. The pipe is formed into coils so the distance between the pipes is 6 to 8 inches (Figure 2-7). The coils are shaped to conform to the bulkheads, floor, and overhead, and are held to the well surfaces by "hangers." Wells are equipped with one bank

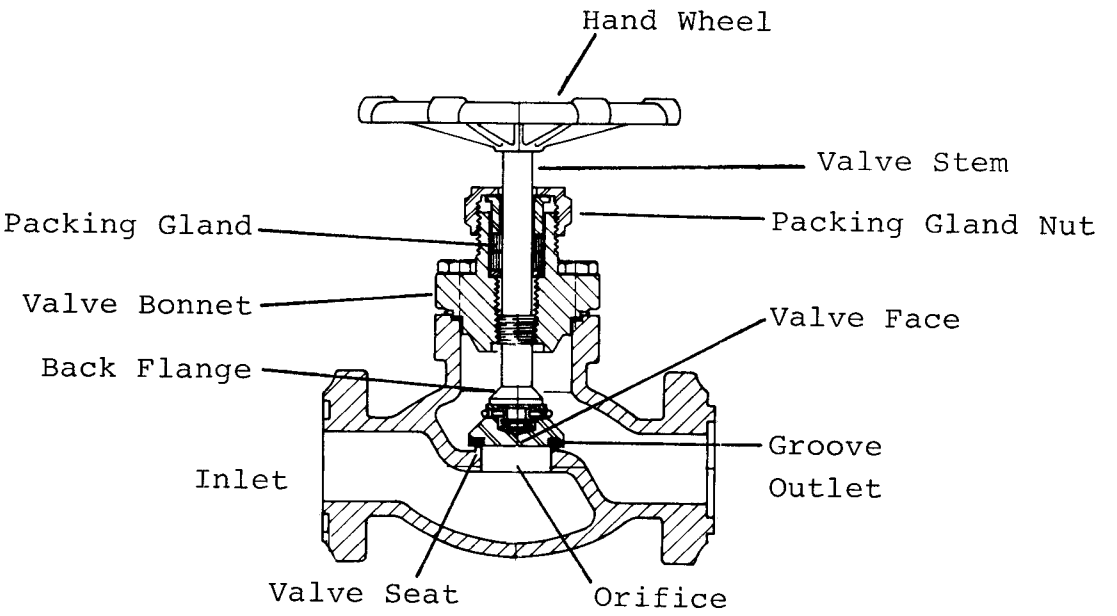

Source: Henry Valve Co.

Figure 2-6. **Shut-off Valve**

Figure 2-7. **Arrangement of Coils in Fish Well**

of coils, containing about 1,000 feet of pipe, for each 30 tons of carrying capacity. Most wells have two banks of coils, and the large bow well is equipped with four. The portion of a well served by a set of coils varies depending on the vessel builder and designer, and should be recorded to facilitate checking the location of the automatic's remote bulbs. This will enable the engineer to determine whether ice is being formed by only one bank and whether one bank of coils is sufficient to refrigerate a foamed well (See Chapter IV).

Coils, particularly the ones in the unloading wells, should be checked periodically for rusting, leaks, and damage to prevent fish spoilage and hazardous conditions from developing during unloading.

Suction Headers and Manifolds

Most tuna vessels have three sets of pipe, three or four inches in diameter, called suction headers or suction mains, which carry ammonia from the coils through the pipe alley to the compressors. The discharge from each bank of coils is connected to the suction headers through a manifold equipped with a shut-off valve at each header. By opening and closing the proper manifold valves each bank of coils can be attached to any suction header. At the compressor end of the suction headers the valves in the manifold allow each header to be connected to any combination of compressors. The flexibility of this arrangement is not affected by the number or positioning of the accumulators and back pressure regulator(s).

Back Pressure Regulator

The back pressure regulator (BPR) (Figure 2-8) is designed to prevent the pressure (and consequently the temperature) in the

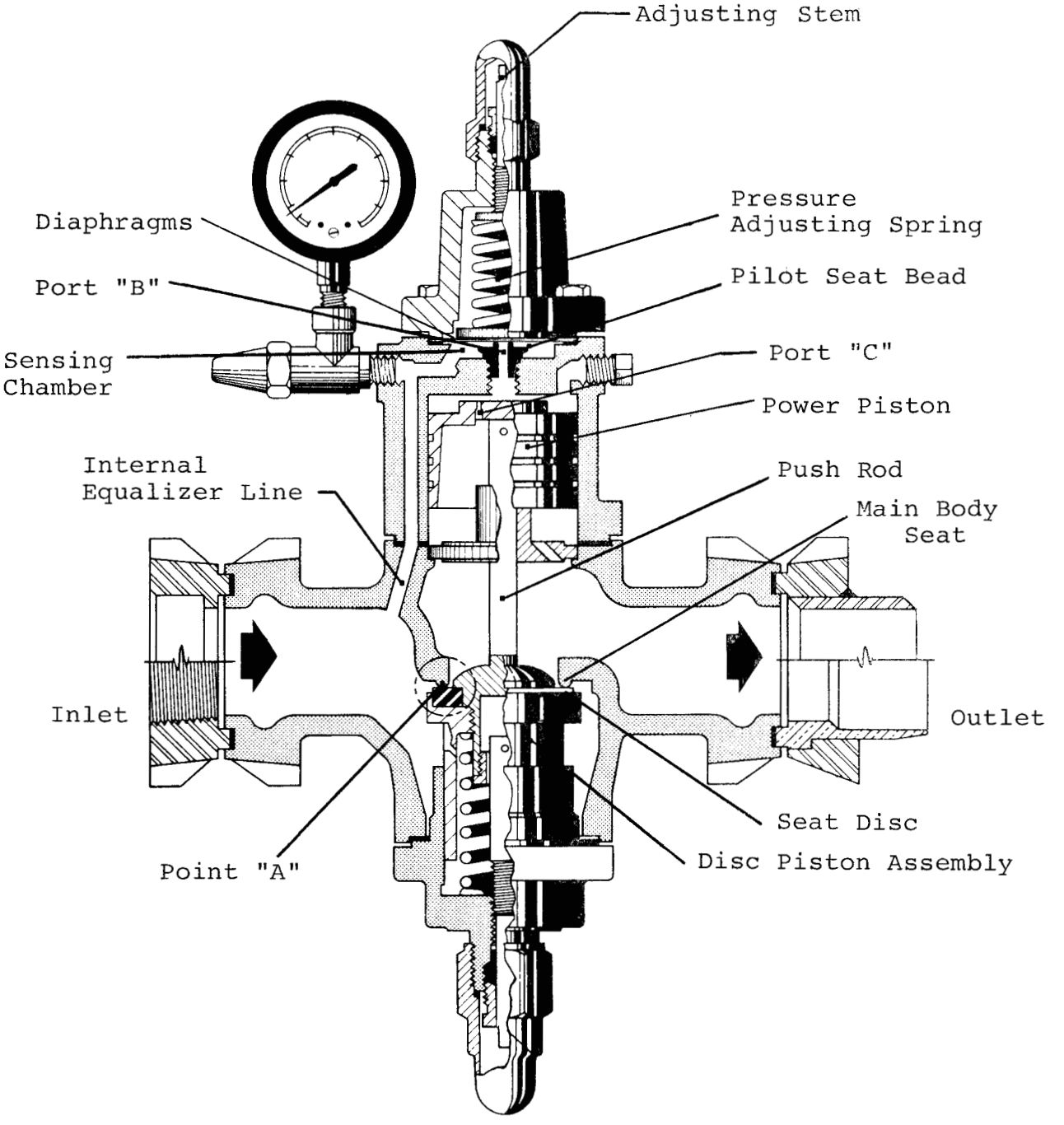

Source: Hubbell Corp.

Figure 2-8. **Back Pressure Regulator**

evaporator coils from falling below a set level. The BPR closes when the evaporator pressure falls.

As shown in Figure 2-8, the pressure in the coils is held back at point "A" by contact between the main body seat and the seat disc. The internal equalizer line transmits the evaporator pressure to the sensing chamber. The pressure-adjusting spring pushes the diaphragms onto the pilot seat bead sealing port "B." When the evaporator pressure exceeds the force of this spring, the diaphragms are flexed opening port "B," which allows the evaporator pressure to push on the top of the power piston. This moves the push rod and disc piston assembly down, opening the BPR at point "A" and allowing ammonia to flow to the compressors. A decrease in the coil pressure results in the closing of port "B." The pressure above the power piston bleeds through port "C" causing the BPR to close. The evaporator pressure setting is changed by turning the adjusting stem--usually clockwise rotation increases the pressure setting. The gauge attached to the BPR measures the evaporator pressure.

The BPR cannot maintain a coil pressure lower than the compressor suction pressure. BPRs are primarily used to maintain a constant temperature in wells of RSW in order to prevent ice formation on the coils. They are used also to ensure stable temperatures in wells with frozen fish.

The one or two BPRs on a vessel are tied into individual suction headers with shut-off valves and bypass piping. Usually a strainer, also called a scale trap (Figure 2-9), is installed upstream of the BPR. A strainer has a removable screen which traps particles that could interfere with the operation of the refrigeration system. The BPRs and strainer should be dismantled and cleaned once during each trip.

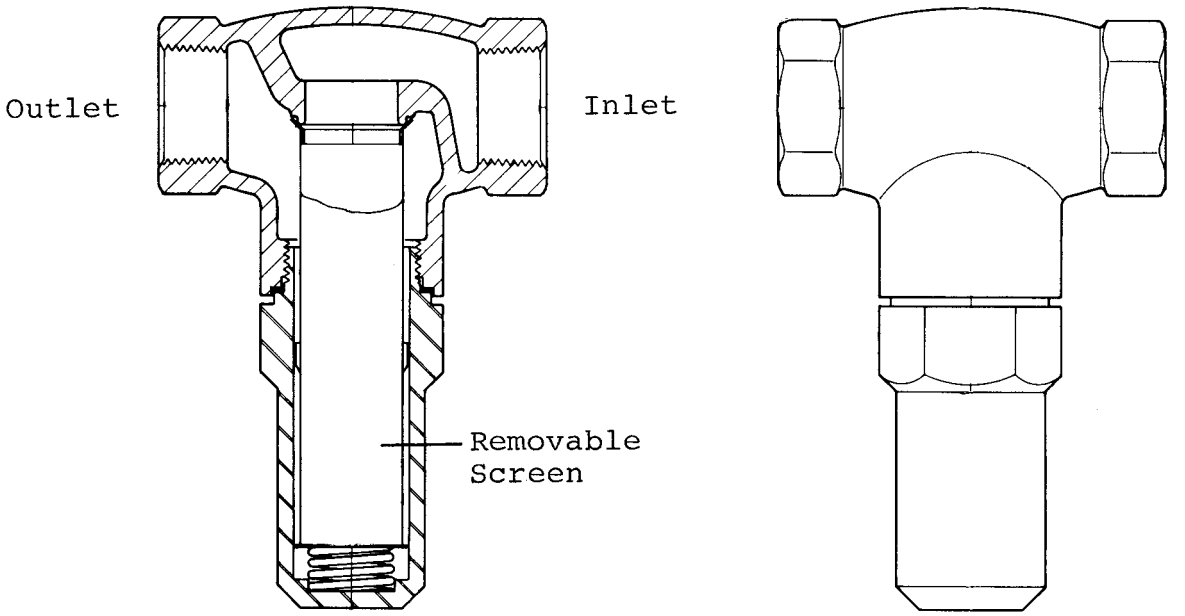

A. Interior

B. Exterior

Source: Henry Valve Co.

Figure 2-9. **Ammonia Strainer**

Suction Accumulator

Suction accumulators (Figure 2-10), also called "vaporiters[2]," are tanks installed in the suction lines upstream from the compressors which accumulate liquid ammonia and prevent it from reaching the compressors. A purse seiner may have one accumulator per suction header or one for each compressor.

Small amounts of liquid ammonia entering an accumulator fall to the bottom and eventually evaporate. The vapor then flows to the compressor. The height of liquid ammonia in an accumulator is indicated by a band of frost that forms on its outside. Most accumulators have a liquid level sensor that triggers an alarm when too much liquid ammonia collects. This condition is corrected by opening the hot gas boil out line and bubbling hot ammonia vapor from the compressor discharge line through the liquid ammonia, increasing its rate of evaporation. The compressor discharge pressure should be watched carefully during this process because excessive superheat may be added to the vapor entering the compressor.

Oil that enters an accumulator collects beneath the liquid ammonia, because of oil's greater density. Therefore, the bottom of the band of frost caused by liquid ammonia indicates the level of accumulated oil (oil does not cause frost to form).

Oil reduces the accumulator's capacity to hold liquid ammonia; therefore, oil should be drained at least once each trip, or whenever the oil layer is more than six inches deep. Oil can be removed by using a clear hose firmly attached to the accumulator's oil drain. The end of the hose should be placed in

---

2. Vaporiter is a registered trademark of the Vilter Manufacturing Corp. The mention of brand names does not imply endorsement by the United States Government.

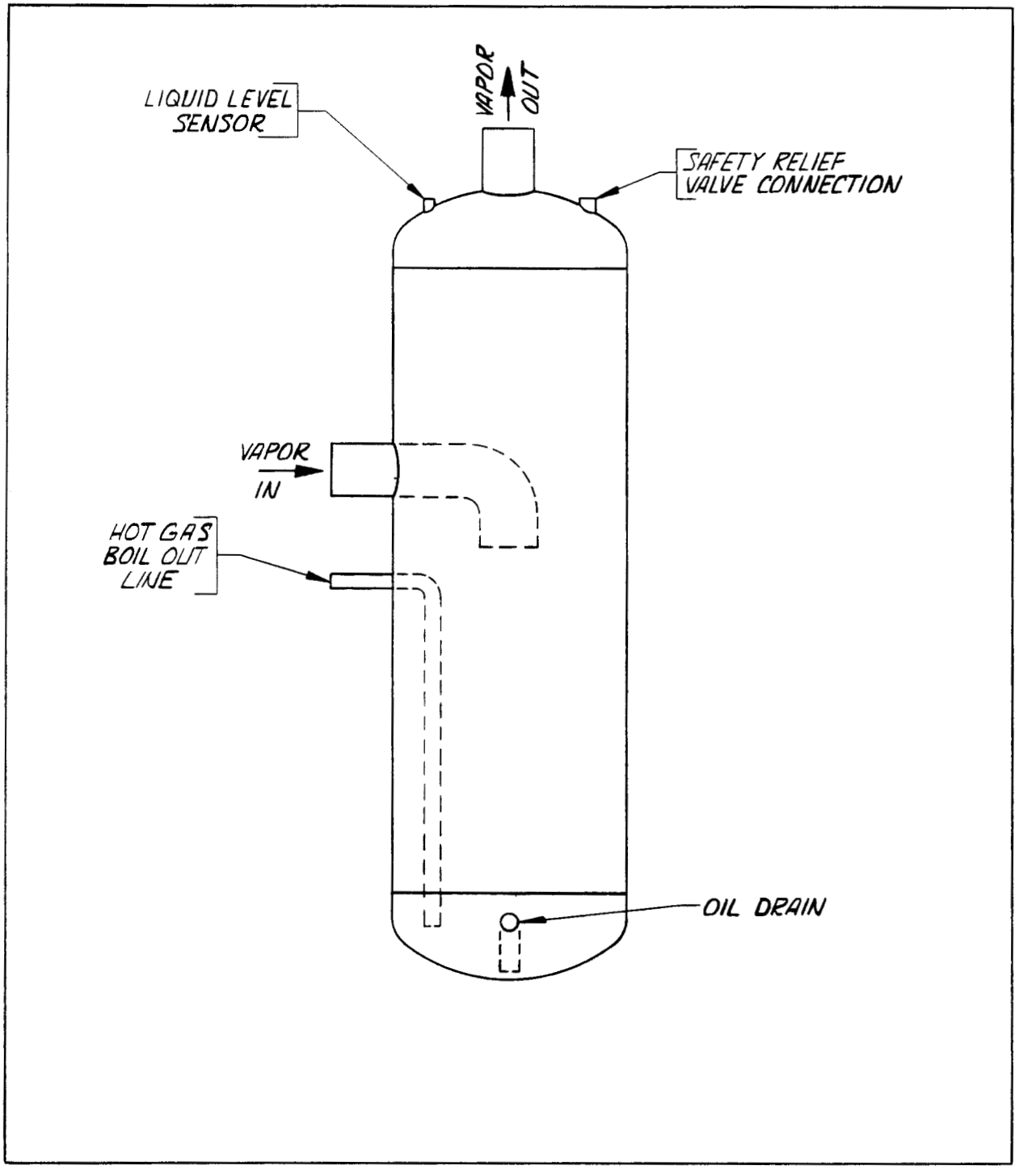

Figure 2-10. **Suction Accumulator**

the bottom of a bucket containing several inches of water. Ammonia mixed with the oil will dissolve in this water. The shut-off valve on the drain should be opened slowly and closed as soon as liquid ammonia appears in the hose. The collected oil should be added to a properly vented used-oil storage tank.

Safety Relief Valves

Safety relief valves (Figure 2-11) are designed to relieve excessive and dangerous pressure from the refrigeration system. They are generally installed on accumulators, condensers, and receivers. Ammonia compressors are equipped with an internal safety relief valve. The valves are set and sealed at the factory to open at a specified pressure level. Those on the compressors, condensers, and receivers are set to open at 250 PSIG (pounds per square inch gauge) and those on the accumulators open at 150 PSIG. The number of relief valves required depends on the internal volume of a piece of equipment. Usually only the receivers are equipped with more than one relief valve. A dual relief valve assembly is connected to the receiver through a three-way valve that allows either relief valve to be removed when the system is pressurized. During normal use the three-way valve is closed so only one relief valve is exposed to the pressure in the system.

The design and general construction of relief valves is similar to that of hand expansion and shut-off valves. One major difference is that a heavy coiled spring holds the valve face against the valve seat unless the working pressure (stamped on the body of the valve) is exceeded. When this condition occurs, the ammonia vapor escapes through the valve and is carried overboard to the atmosphere through piping. Once a relief valve has opened, it will not reseat properly and should be replaced. Temporary repair can be made by reseating the valve manually.

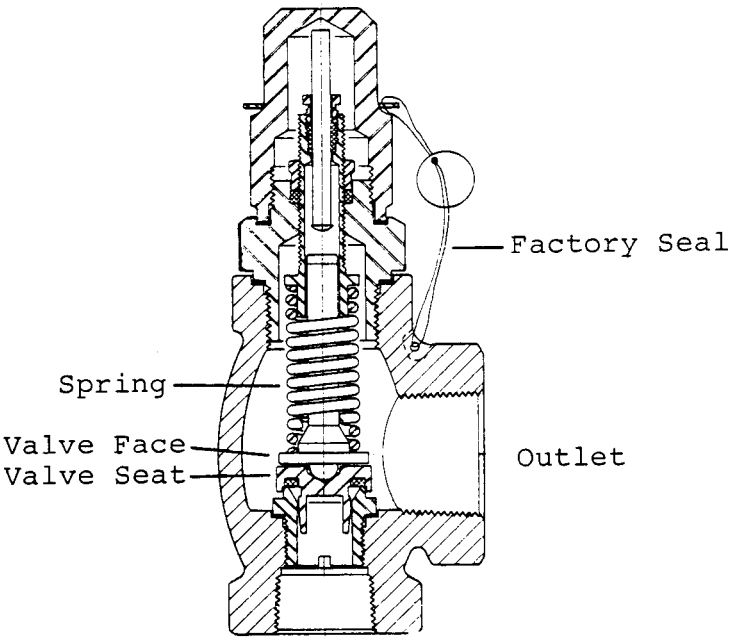

A. Single Relief Valve

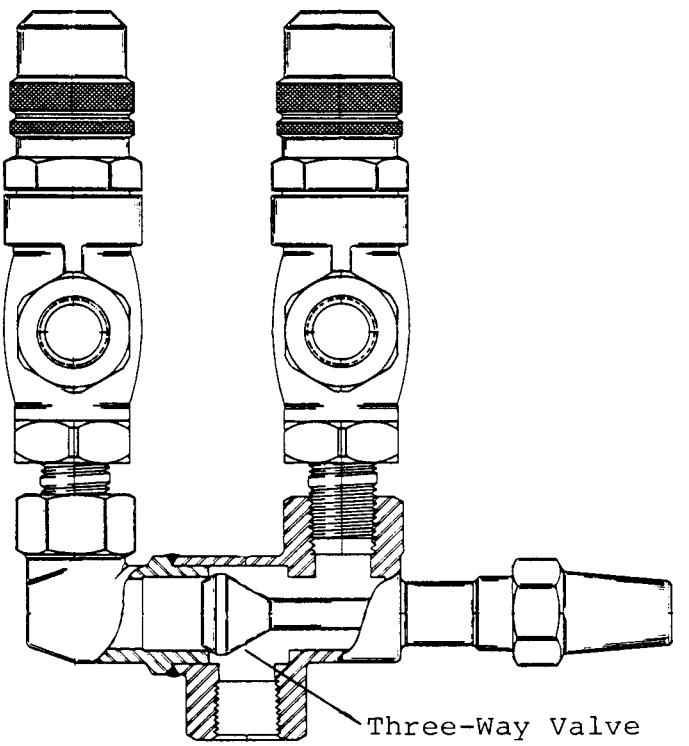

B. Dual Relief Valve Assembly
Source: Henry Valve Co.

Figure 2-11. **Safety Relief Valve**

Ammonia Compressors

Tuna seiners are usually equipped with four to six reciprocating ammonia compressors or ice machines of the "440VMC" series (Vilter Multi-Cylinder) (Figure 2-12), manufactured by Vilter Manufacturing Corporation. These compressors have 4, 6, or 8 cylinders and deliver 22 to 45 tons of refrigeration at 185 PSIG high-side pressure, 15 PSIG suction pressure, and 1,000 revolutions per minute (RPM) (depending on the number of cylinders in use). Compressor capacity can be adjusted through the use of manual or automatic cylinder unloaders. When an unloader is activated, the suction valves for a pair of cylinders are held open and no vapor is compressed even though the pistons continue to move. The cylinder heads are spring loaded, which allows them to pass small amounts (slugs) of liquid ammonia without transmission of heavy shock loads to the compressor parts. However, "slugging" should be avoided because it will ultimately damage the compressor.

Compressors are normally equipped with fresh water-cooled cylinder covers and an oil cooler. The fresh water which circulates through these components, also passes through a heat exchanger, where the heat is transferred to sea water. To limit corrosion, the oil cooler is fitted with a zinc anode which must be replaced periodically. To prevent condensation of ammonia in the compressor, the water flow through the cylinder covers should be turned off during compressor shut down.

High-pressure, low-pressure, and oil-failure control switches automatically prevent the compressors from operating under extreme conditions (too high discharge pressure, too low suction pressure, or insufficient oil pressure). Switch settings are based on the limits of the compressor. The limits are given in the manufacturer's operating instructions.

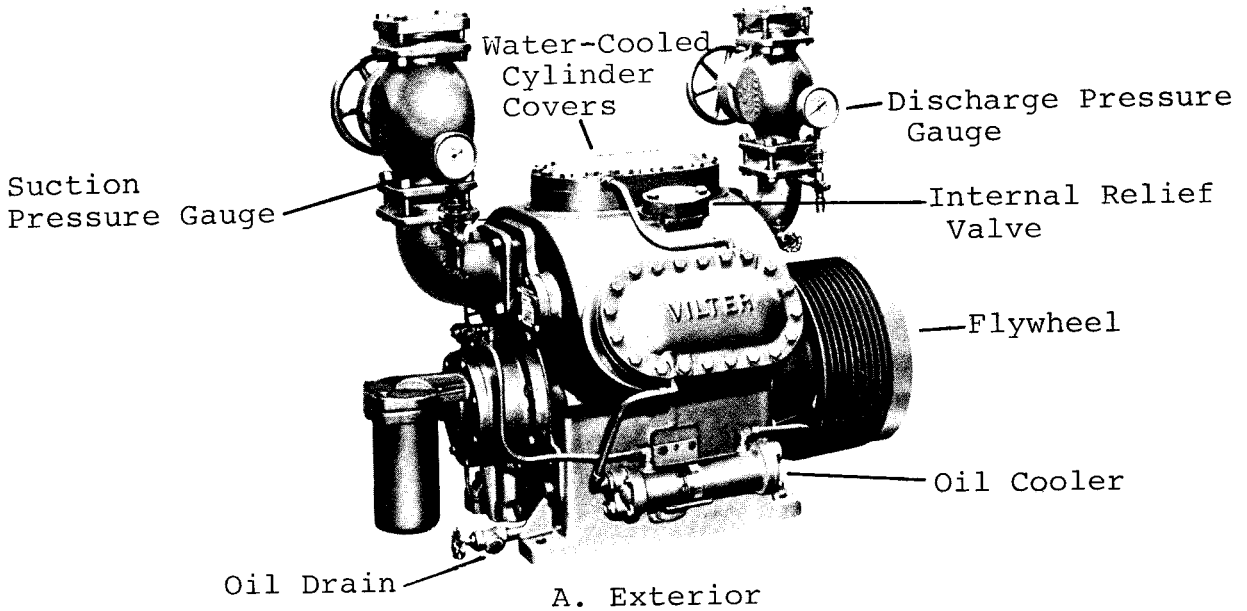

A. Exterior

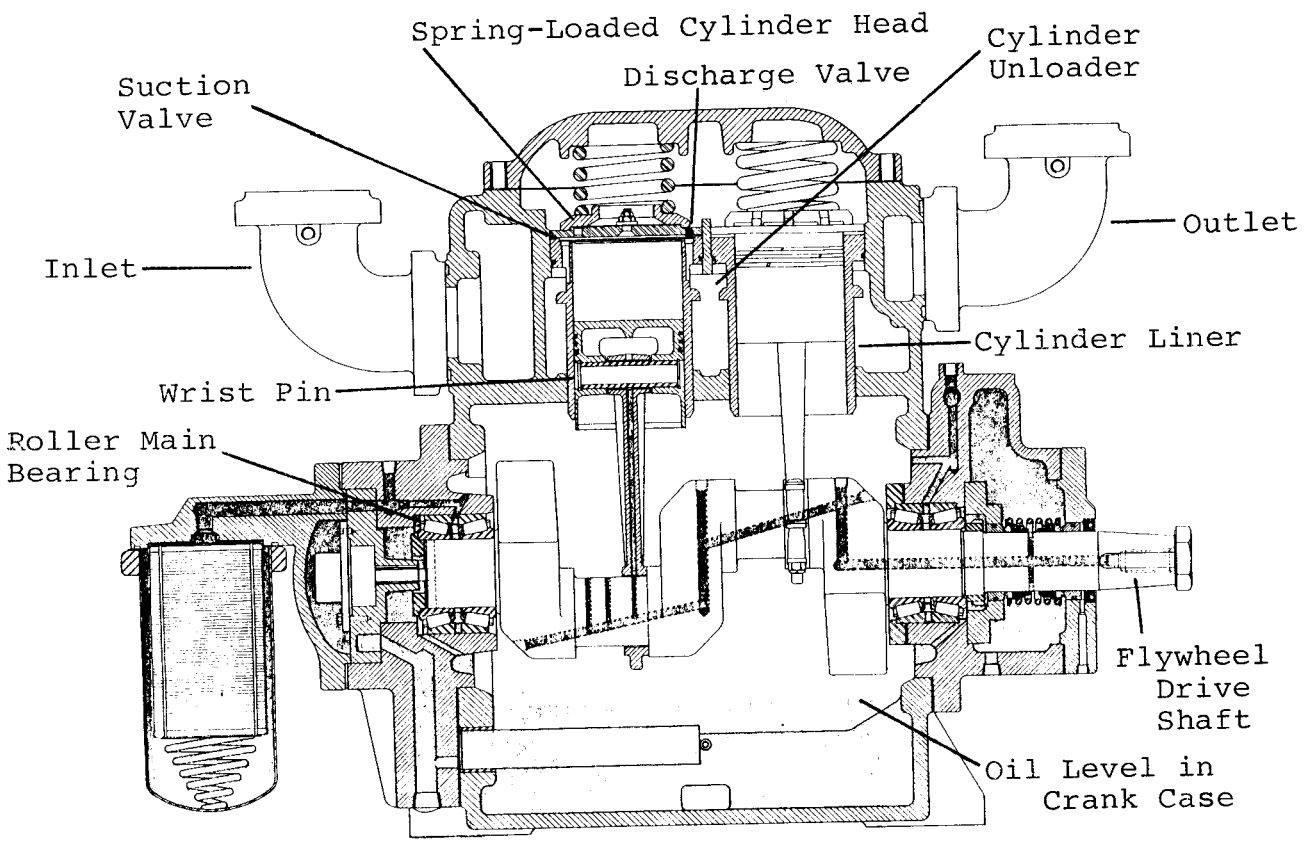

B. Interior

Source: Vilter Manufacturing Corporation, Milwaukee, Wisconsin

Figure 2-12. **Ammonia Compressor**

Each compressor is driven at about 1,000 revolutions per minute by an electric motor attached to the compressor flywheel with a set of V-belts. Gauges at the inlet and discharge show the suction and discharge pressure for each machine. The suggested maximum limits for a compressor's discharge temperature, discharge pressure, suction pressure, oil temperature, compression ratio, and so forth, are listed in the operating instructions manual. These limits (except for the compression ratio) are not exceeded during normal operations on a tuna seiner.

The compression ratio is calculated by dividing the absolute discharge pressure by the absolute suction pressure. (The relationship between absolute pressure (pound per square inch absolute, PSIA) and gauge pressure is discussed in Appendix A). Since the recommended maximum compression ratio is 8:1, the lower limit for the suction pressure can be determined by dividing the absolute discharge pressure by 8. Thus, when the discharge pressure is 199.7 PSIA (185 PSIG), the suction pressure should not fall below 25.0 PSIA (199.7/8), or 10.3 PSIG.

As the compression ratio increases, the refrigeration capacity and efficiency of a compressor decreases (Table 2-1) and the amount of superheat in the discharge gas, load on the bearings, and general wear increases. Excessive superheating will deposit carbon on the discharge valves and may damage the compressor. Compressors can be operated at compression ratios above the suggested maximum without producing immediate signs of malfunctioning. However, this practice will result in more frequent repairs, breakdowns, and shortened compressor life.

With proper routine maintenance, a compressor should provide continuous service for at least two years. The condition of the

Table 2-1. **Compressor Refrigeration Capacities and Power Requirements**

Condensing Pressure PSIG and Corresponding Temperature °F	Suction Temp °F	Suction Press PSIG	4 Cylinder Tons[a]	4 Cylinder BHP[b]	6 Cylinder Tons	6 Cylinder BHP	8 Cylinder Tons	8 Cylinder BHP
	-15[c]	6.2	13.5	30.2	20.2	44.5	27.0	59.2
	-10	9.0	16.4	32.2	24.6	47.5	32.9	63.2
	- 5	12.2	19.7	34.5	29.5	50.9	39.5	67.6
	0	15.7	23.3	36.9	34.9	54.5	46.6	72.4
165#	5	19.6	27.3	39.4	40.9	58.0	54.7	77.1
89.6°	10	23.8	31.7	41.3	47.5	60.9	63.5	81.0
	15	28.4	36.4	42.8	54.6	63.2	72.8	84.0
	20	33.5	41.6	43.8	62.4	64.6	83.2	85.9
	25	39.0	47.1	44.2	70.6	65.2	94.2	86.6
	30	45.0	53.0	44.5	79.5	65.7	106.1	87.2
	35	51.6	59.6	44.7	89.4	66.0	119.2	87.7
	-15[c]	6.2	13.2	31.4	19.8	46.5	26.5	61.6
	-10	9.0	16.1	33.5	24.1	49.5	32.2	65.6
	- 5	12.2	19.3	35.8	28.9	52.7	38.6	70.1
	0	15.7	22.8	38.0	34.3	56.0	45.6	74.5
175#	5	19.6	26.8	40.4	40.2	59.5	53.7	79.2
93.0°	10	23.8	31.1	42.4	46.6	62.5	62.3	83.1
	15	28.4	35.8	44.0	53.7	64.8	71.6	86.1
	20	33.5	40.9	45.2	61.3	66.6	81.8	88.5
	25	39.0	46.3	46.0	69.4	68.0	92.7	90.3
	30	45.0	52.2	47.0	78.3	69.3	104.5	92.1
	35	51.6	58.8	47.6	88.2	70.4	117.6	93.4
	-15[c]	6.2	12.9	32.6	19.3	48.0	25.9	63.8
	-10[c]	9.0	15.7	34.9	23.5	51.5	31.5	68.4
	- 5	12.2	18.9	37.2	28.3	54.7	37.9	72.8
	0	15.7	22.4	39.3	33.6	58.0	44.8	77.0
185#	5	19.6	26.2	41.4	39.3	61.0	52.5	81.1
96.2°	10	23.8	30.6	43.4	45.9	64.0	61.2	85.0
	15	28.4	35.2	45.3	52.8	66.7	70.4	88.6
	20	33.5	40.2	46.6	60.3	68.7	80.5	91.4
	25	39.0	45.6	47.8	68.4	70.6	91.3	93.8
	30	45.0	51.4	49.2	77.1	72.6	102.9	96.5
	35	51.6	58.0	50.6	87.0	74.7	116.0	99.2
	- 5[c]	12.2	17.9	39.0	26.8	57.4	35.8	76.4
	0[c]	15.7	21.3	41.5	31.9	61.1	42.7	81.2
	5[c]	19.6	25.2	43.7	37.8	64.4	50.4	85.6
205#	10[c]	23.8	29.3	45.5	43.9	67.0	58.7	89.0
102.3°	15	28.4	33.9	47.0	50.8	69.4	67.9	92.3
	20	33.5	38.9	48.9	58.3	72.0	77.8	95.9
	25	39.0	44.2	50.5	66.3	74.5	88.5	99.0
	30	45.0	50.0	52.0	75.0	76.8	100.0	102.0
	35	51.6	56.4	53.5	84.6	78.9	112.8	104.8

Source: Vilter Manufacturing Corporation, Milwaukee, Wisconsin.

Note: Table for Vilter Ammonia Compressors at 1000 RPM.

[a]Tons of refrigeration produced.
[b]Brake horsepower required.
[c]Values above the heavy line are for interpolation only. Do not operate compressors with a compression ratio greater than 8:1.

valves, bearings, and wrist pins can be checked without dismantling the machine.

The condition of the suction valves is determined by checking the speed with which a vacuum is produced after closing the shut-off valve on the compressor's suction manifold. The faster a vacuum is produced, the better the condition of the suction valves. After producing the vacuum, the condition of the discharge valves can be determined by checking the time required for the high-side pressure to equalize with the low side pressure after the low pressure control switch shuts down the machine. The longer the time the better the condition of the discharge valves. If the compressor hammers or knocks while producing a vacuum, worn bearings and/or wrist pins are indicated. These checks should be performed several times in succession to provide reliable results.

Oil Separator

An oil separator (Figure 2-13) is normally installed in the discharge line from each compressor. Separators trap oil and prevent it from reaching the evaporator coils where it would impede the flow of ammonia and impair refrigeration efficiency. The oil separator is a small chamber in which droplets of oil (mixed with high-pressure ammonia vapor) hit a series of "demister" screens, fall to the bottom, and drain into a separate chamber controlled by a float valve. When the oil level rises, the float valve opens, draining the oil back to the compressor. The oil separator requires little attention other than checking that the float valve is opening properly.

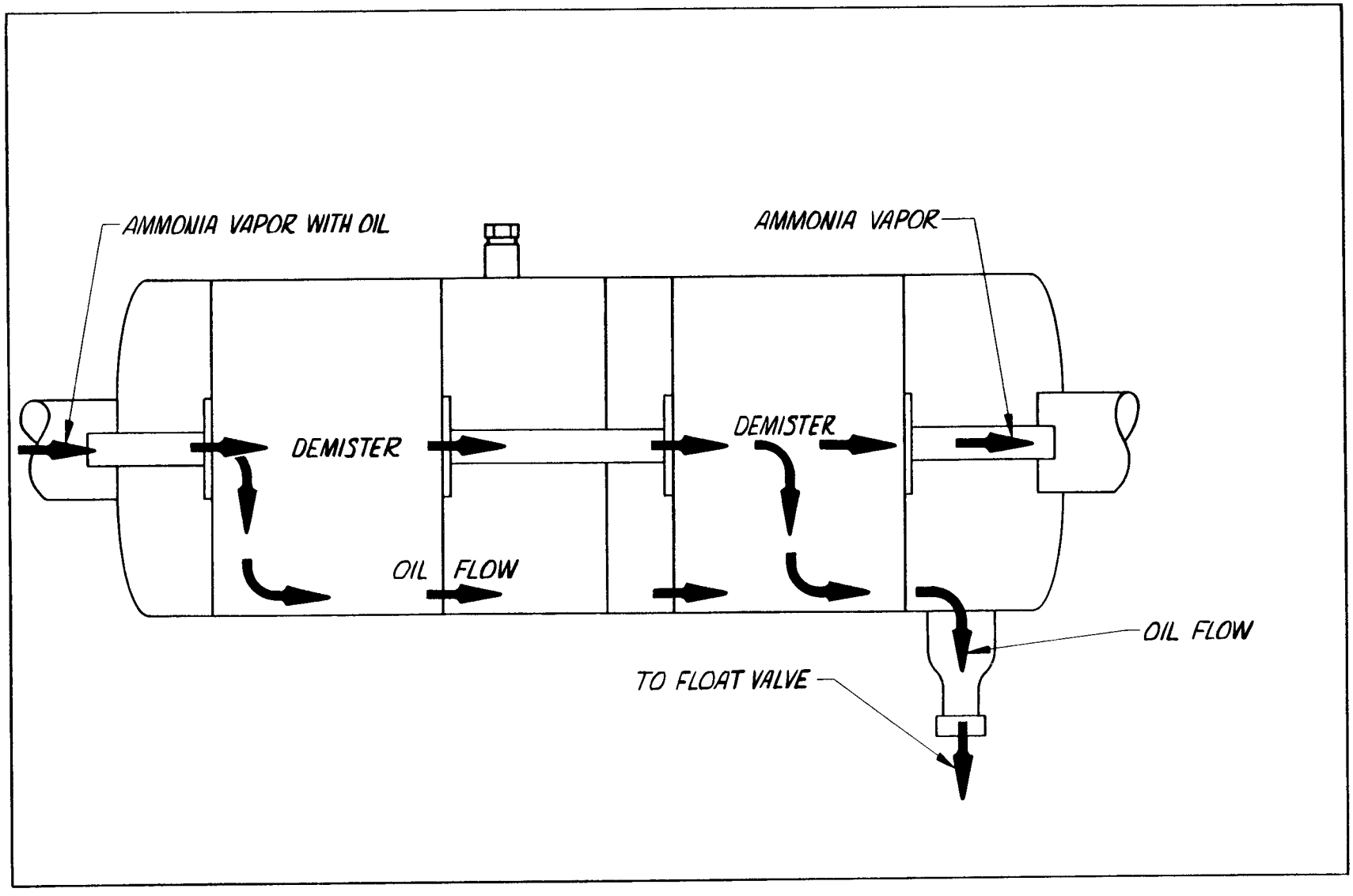

Figure 2-13. **Oil Separator**

Check Valve

A check valve allows flow in only one direction. This valve is installed in the discharge line from each compressor downstream from the oil separator, and prevents high-pressure ammonia from backing into the compressors. Because the check valve automatically protects the compressors, the shut-off valve on the discharge from a compressor does not have to be closed each time the compressor is shut down.

Oil Trap

On many seiners an oil trap is installed downstream from the junction of the discharge header and the separate discharge lines from each compressor, and upstream from the condenser. When the ammonia vapor slows as it passes through an oil trap, droplets of oil suspended in the vapor fall to the bottom of the trap. Oil traps are sometimes equipped with strainer screens, which improve oil and particle removal. Oil traps must be drained and strainer screens cleaned periodically. Extreme caution should be exercised when draining oil, since the trap contains hot high-pressure ammonia vapor. The procedure for removing oil is the same as described for the accumulators--except the shut-off valve in the oil trap drain should <u>never</u> be opened fully and the draining should stop as soon as any bubbles of ammonia are seen. All ammonia must be evacuated from the oil trap and the portion of the discharge line between the shut-off valves before the trap can be opened and the strainer removed for cleaning. (See Appendix B for ammonia safety information.)

Condenser

The condenser removes the heat of compression and the heat absorbed in the coils from the ammonia vapor, thereby cooling the

ammonia to its condensing temperature. Tuna seiners are equipped with two or three box-type condensers (Figure 2-14). The ammonia vapor enters the condenser at the upper pressure dome and passes through a bundle of 1-1/4-inch diameter tubes (or condensing pipes) around which sea water flows. The liquid ammonia collects in the lower pressure dome and drains through a pipe into a receiver. Sea water flows into the bottom of the condenser, makes three to five horizontal passes across the tube bundles as it moves around directing baffles, and exits at the top. The tubes provide 600 to 1,250 square feet of surface area, facilitating heat exchange. Sea water is pumped from the sea chest by one or two 1,000 GPM pumps and flows through the condenser(s) at 400 to 1,200 GPM depending on the arrangement, number, and condition of the pumps and condensers.

The elevated temperature in the condenser encourages the growth of marine organisms. This slows the flow of sea water and retards the heat transfer. Many vessels are equipped with a hypochlorite generator which injects hypochlorite at one or two parts per million into the water entering the sea chest, The hypochlorite inhibits marine growth in the condensers, piping, and heat exchangers. However, it is still necessary to inspect the interior of the condensers after each trip. Small inspection plates on both ends simplify this. The condition of the zinc anodes attached to the inspection plates also should be checked and replaced if 35 percent of their weight has been lost. The large panel(s) on the front of the condenser should be removed every few trips, and any marine growth dislodged with metal scrapers and flushed out with a high-pressure hose. After cleaning, the condenser should be rinsed with fresh water and left open to dry until it is put back into service.

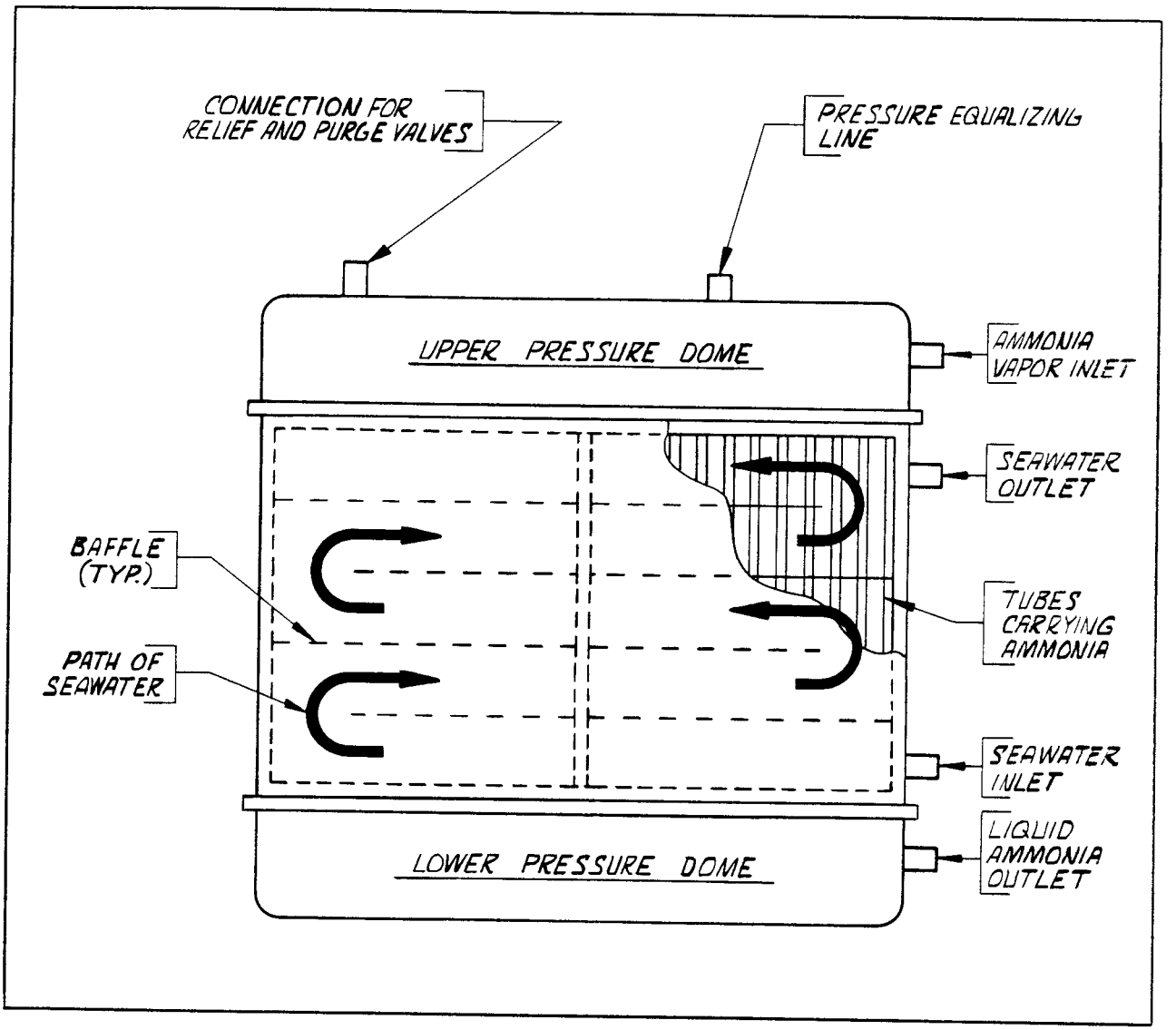

Figure 2-14. **Box-Type Condenser**

A condenser should never sit partially full of either salt water or fresh water. If the flow of sea water is stopped, the condenser must be drained, flushed with fresh water, and completely dried to prevent corrosion.

A pressure equalizing line runs from the upper pressure dome of each condenser to the receiver to prevent line pressure build-up in the receiver and a reversal of ammonia flow.

The purge valve on the top of each condenser permits removal of non-condensable gases (principally air) from the system. The presence of non-condensables increases the high-side pressure and reduces the efficiency of the refrigeration system. Prior to purging, the shut-off valve on the ammonia inlet line to the condenser is closed, although the water flow is maintained and the ammonia discharge line remains open. When the condenser has cooled, a hose with one end in a bucket of water is firmly attached to the purge valve, which is opened slightly, releasing the non-condensables. Ammonia in the bucket is detected by cracking or snapping noises and a characteristic pungent odor. At the first sign of ammonia the purge valve should be closed. If the system contains a large amount of air, it may need to be purged several times. Between each purging the condenser should be operated long enough to reach normal operating temperature.

Ideally, before purging, the refrigeration system should be shut down for two to three days with all the ammonia valves to the condensers open. This allows the non-condensable gases to accumulate in the system's high point--the top of the condensers. Although the complete refrigeration system can rarely be shut off for so long, one condenser can be purged at a time while the rest of the system is working.

Receiver

The receiver (Figure 2-15) is a high-pressure cylindrical steel vessel that has the capacity to hold all the liquid ammonia in the system (generally about 2,000 pounds). One or two receivers are installed in the pipe alley allowing gravity to drain the liquid ammonia to them from the condensers on the wet deck. The sight glass for checking the amount of liquid ammonia in the receivers is secured at the top and bottom with shut-off valves. These valves should be opened only when checking the liquid level to reduce the risk of a dangerous ammonia leak in case of sight glass breakage.

The inlet line to the receiver is separated from the outlet line to prevent dirt and sediment stirred up by the incoming liquid from entering the outlet. The outlet pipe extends near to the tank bottom. Sufficient liquid ammonia should be kept in the receiver to cover the end of the outlet pipe. The shut-off valve closest to the receiver on the liquid line is often called the "king valve" since its closure will stop the flow of ammonia to the system. In the event of a major leak in the system, this valve must be closed. Many seiners also have an electronically operated king valve with a control switch located outside the pipe alley. This permits the shut off of ammonia without entering the pipe alley where dangerous levels of ammonia gas may be present. The strainer in the liquid line traps particles that could clog and damage the hand and automatic expansion valves. The shut-off valve on the downstream side of this strainer is often called the "queen valve." The oil sump collects oil that has been carried past the upstream oil separators and trap. This oil should be drained regularly. Particular care should be exercised during draining because of the large amount of ammonia in the receiver. Excessive force should not be applied to the

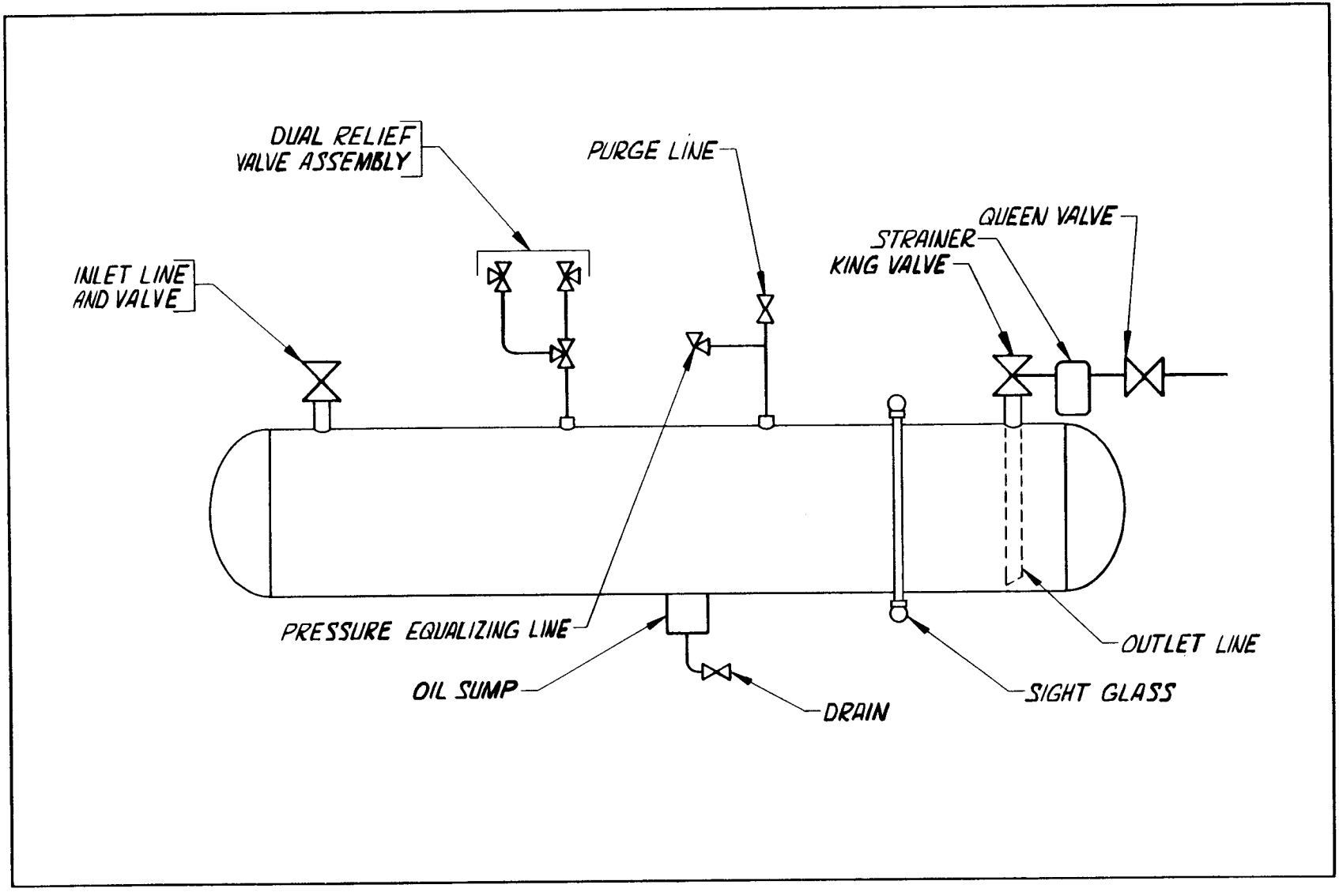

Figure 2-15. **Receiver**

oil drain shut-off valve because this could break the valve off the drain pipe. The drain should be piped to an open area above deck. Installation of several shut-off valves and a separate oil sump in the drain line will reduce the chance of an uncontrolled release of ammonia.

Pressure Gauges

In addition to the pressure gauges at the inlet and discharge of each compressor, pressure gauges showing the suction pressure in the suction manifold for each compressor and the high-side pressure in the discharge header are mounted near the console in the engine control room. Often, gauges showing the suction pressure in each suction header are mounted near the doorway between the engine room and the pipe alley.

There are two scales on each gauge face; one shows pressure in PSIG, and the other gives the corresponding evaporating/condensing temperature in degrees Farenheit. Thus, gauges in suction lines can indicate both the suction pressure and the corresponding ammonia evaporating temperature.

Temperature Sensors

On some seiners temperature sensors are installed in the inlet for the circulator pump and are connected to a temperature indicator in the engine control room. This allows for remote monitoring of the RSW or brine temperature. The life of these sensors is usually short and they are replaced or augmented by hanging or floating thermometers in the coaming (the raised curb around the hatch opening). Since these thermometers are often roughly treated, their accuracy should be checked at the start of each trip. This may be done by placing the thermometers in ice

water and noting the difference between the thermometer reading and 32°F. The ice water should contain equal amounts of ice and water and be stirred regularly. The observed difference may be written on the thermometer so subsequent temperature readings can be corrected.

CHAPTER III
OPERATION OF A REFRIGERATION SYSTEM

ROUTINE MAINTENANCE

The ability of a refrigeration system to operate at peak efficiency depends on conscientious performance of routine maintenance. Some of the maintenance regularly required on various components of the refrigeration system has been described in Chapter II. Much of this maintenance can be performed after unloading the fish, when there is little demand for refrigeration. This maintenance includes purging non-condensables from the condensers; inspecting and cleaning the condensers; removing oil from the receiver(s), accumulators, oil traps, and coils; cleaning the strainers; checking and replacing the anodes ("zincs") in the condensers, fish wells, and the compressor's water cooling system; and replacing leaking hand expansion or shut-off valves. The compressors should be serviced according to schedules provided in the manufacturer's operating instructions. When maintenance is performed, it should be noted in the engine room log. Comments should be included in the log concerning the amounts of oil, air, or scale removed, the weight of anode remaining, and so forth.

ADJUSTING AMMONIA FLOW

The amount of liquid ammonia passing through a bank of coils is controlled by the hand or the automatic expansion valves, or both. Ideally, sufficient liquid ammonia should be fed to the coil so the last of the liquid ammonia evaporates at the coil's exit from the well. Safe and efficient refrigeration is produced under these conditions because the entire length of the coils absorbs heat at the maximum rate, the vapor leaving the coil has

minimum superheat, and liquid ammonia will not reach the compressors.

On tuna seiners, as presently equipped, the length of frost along the coil discharge line in the pipe alley is the only way to check the adjustment of the expansion valve. Usually, chief engineers try to have two to three feet of the discharge line covered with dry frost. The presence of frost does not necessarily indicate liquid ammonia is present, since wet vapor (vapor with suspended droplets of liquid ammonia) and cold vapor cause frost to form. To be sure that a coil has liquid ammonia throughout, the expansion valve can be opened enough to cause liquid ammonia to collect in the accumulators, and then the expansion valve setting can be reduced. However, this increases the risk that liquid ammonia will reach the compressors and is therefore not recommended.

To prevent starving the coils of liquid ammonia, the length of frost on the discharge may be increased in order to lower evaporator temperatures (and suction pressures). On the other hand, liquid ammonia in the suction headers increases the load on the system without improving the speed at which the fish are chilled. Thus, the proper adjustment of expansion valves neither overfeeds nor underfeeds the coils with liquid ammonia. However, because the rate of heat removal is usually limited by the ability of the coils to absorb heat rather than by the capacity of the compressors to refrigerate, engineers prefer to slightly overfeed the coils than to underfeed them.

Hand expansion valves have large capacities and consequently are rarely opened more than one-half to one turn and are often adjusted slightly by gently tapping the hand wheel with a hammer. Automatic expansion valves have smaller capacities and often

need several turns to produce the proper refrigerant flow. Even when fully open, some automatics do not allow frost to form on the discharge, indicating the coils require more ammonia. In this case the automatic should be replaced with one of larger capacity. If a replacement is not available, the hand expansion to the same coil can be opened slightly to increase the ammonia flow to the well.

When a large number of wells are refrigerated, ice buildup around the expansion valves and on the suction headers is common, however, this inhibits the ability to determine length of frost coming from one coil or well. A well, that has had its expansion valves opened significantly (such as after brining), can be attached to a separate suction header. Frost formation on this suction header will show clearly and enable the expansion valves to be cut back before the system is flooded.

SUCTION PRESSURE

Most chief engineers try to maintain a suction pressure of about 15 PSIG in brined or dried wells. This produces a temperature of -1°F in the coils and promotes rapid heat removal, without exceeding the maximum compression ratio. If suction pressures below 15 PSIG are used, the compression ratio should be checked periodically, because the maximum limits can be exceeded with only a slight decrease in suction pressure or increase in discharge pressure.

Decreasing the suction pressure decreases a compressor's refrigerating capacity and increases the power required to produce one ton of refrigeration (Table 2-1). Figure 3-1 shows this effect on the performance of a 6-cylinder compressor at 185 PSIG condensing pressure. This reduction in compressor capacity

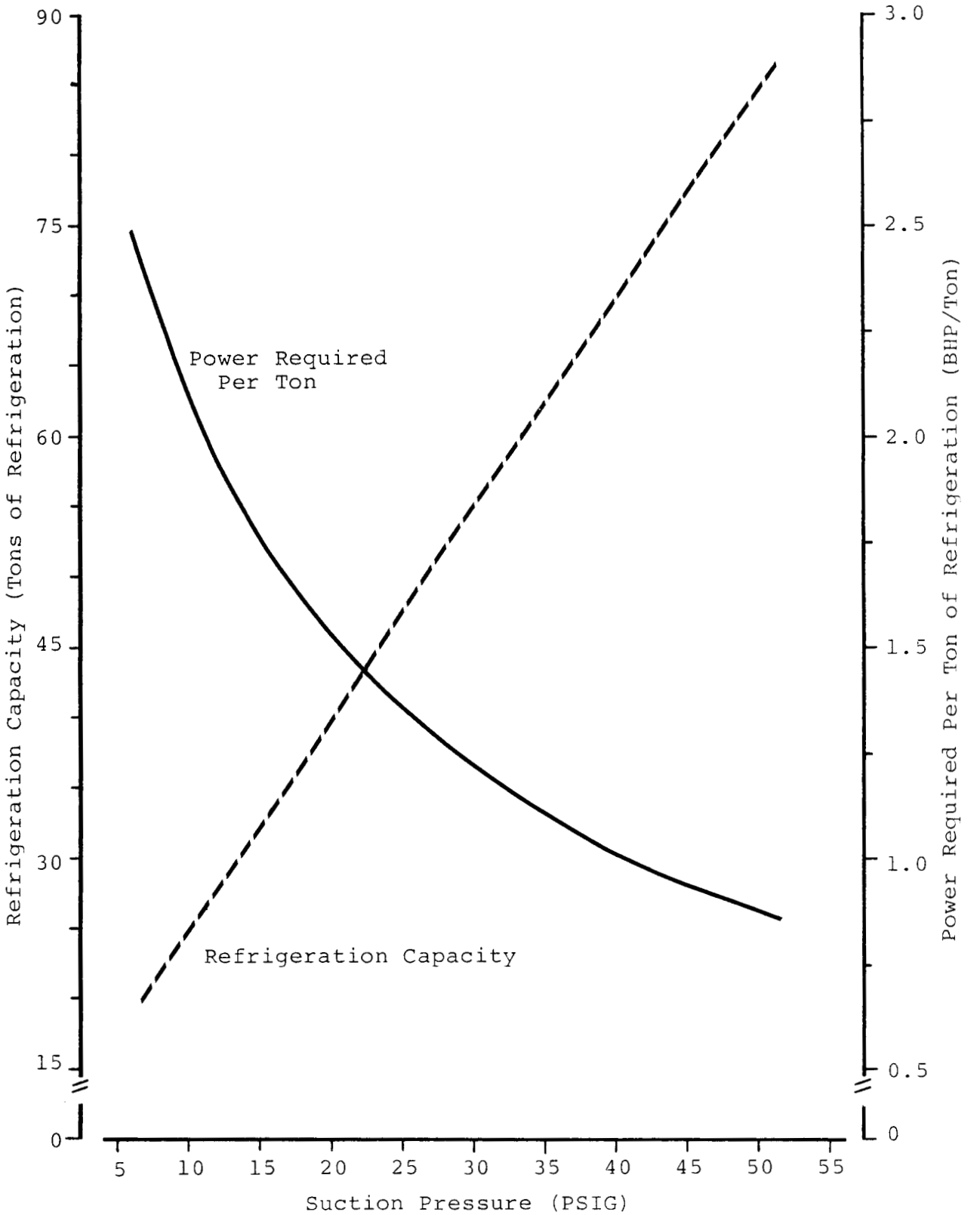

Figure 3-1. **Compressor Refrigeration Capacity and Power Required at Different Suction Pressures**

is not critical since the speed with which a tuna seiner's refrigeration system can chill and freeze a well of fish is limited by the coils' ability to absorb and remove heat. Calculations based on theoretical values and actual data (Glassen and Cottrell, 1984) show that the two 1,000 foot banks of coils in a fish well are able to supply a total of between 15 to 20 tons of refrigeration.

To achieve the maximum freezing rate with this evaporator-limited system, the suction pressure should be held as low as the compressors' limits allow. This low pressure maintains the greatest temperature difference between the coils and the brine and fish, allowing the coils to remove heat as quickly as possible. The refrigerating capacity of the coils in a well will vary depending on their length and the efficiency of ammonia flow. Periodic cleaning of strainers and use of high-suction pressure to remove oil from the coils ensures that the coils operate at a maximum capacity. Brine flow must also be maintained over the coils and fish for maximum heat removal.

When a heavy load is put on the refrigeration system, the suction pressure increases if the amount of ammonia passing through the system exceeds the compressor's capacity. Additional compressors can be connected to this suction line to maintain the desired pressure. Compressors for this purpose can be disconnected from the "cold" suction line for several hours or even a day without a significant temperature increase in the cold wells. As the temperature in the wells is reduced, the expansion valves must be cut back to reduce the flow of ammonia and avoid flooding the compressors.

Suction pressure can be adjusted by varying the number of compressors (and/or compressor cylinders under load) and the

expansion valve setting. However, the expansion valves should always be opened enough to form frost on the coil discharge--otherwise a lower suction pressure will be achieved by starving the coils and reducing their effectiveness.

DISCHARGE PRESSURE

The discharge pressure should be kept as low as possible to reduce compressor wear, the introduction of oil into the refrigeration system (due to oil blown by the piston rings), the compression ratio (allowing a lower suction pressure to be used), the power required to run the compressor, and the power used per ton of refrigeration produced (Table 2-1). The effect of varying condensing pressure on the performance of a 6-cylinder compressor, operating with a 15.7 PSIG suction pressure, is shown in Figure 3-2. The high-side pressure may be limited by purging non-condensables from the system and cleaning the condenser. The discharge pressure can be reduced by increasing water flow through the condensers. This is done by turning on an extra pump--particularly if the pressure rises in response to a sudden increase in load. Worn impellers on the condenser water pumps can cause the discharge pressure to increase due to inadequate cooling of the discharge gas in the condenser. Superheating of the vapor in the suction lines raises the discharge pressure. Suction lines are often insulated when they have been installed through areas of high temperatures. Caution should be used when the hot gas return line is opened to remove liquid ammonia from an accumulator.

USE OF SUCTION HEADERS

The refrigeration system piping can be connected so that one suction header serves all the wells and compressors in a

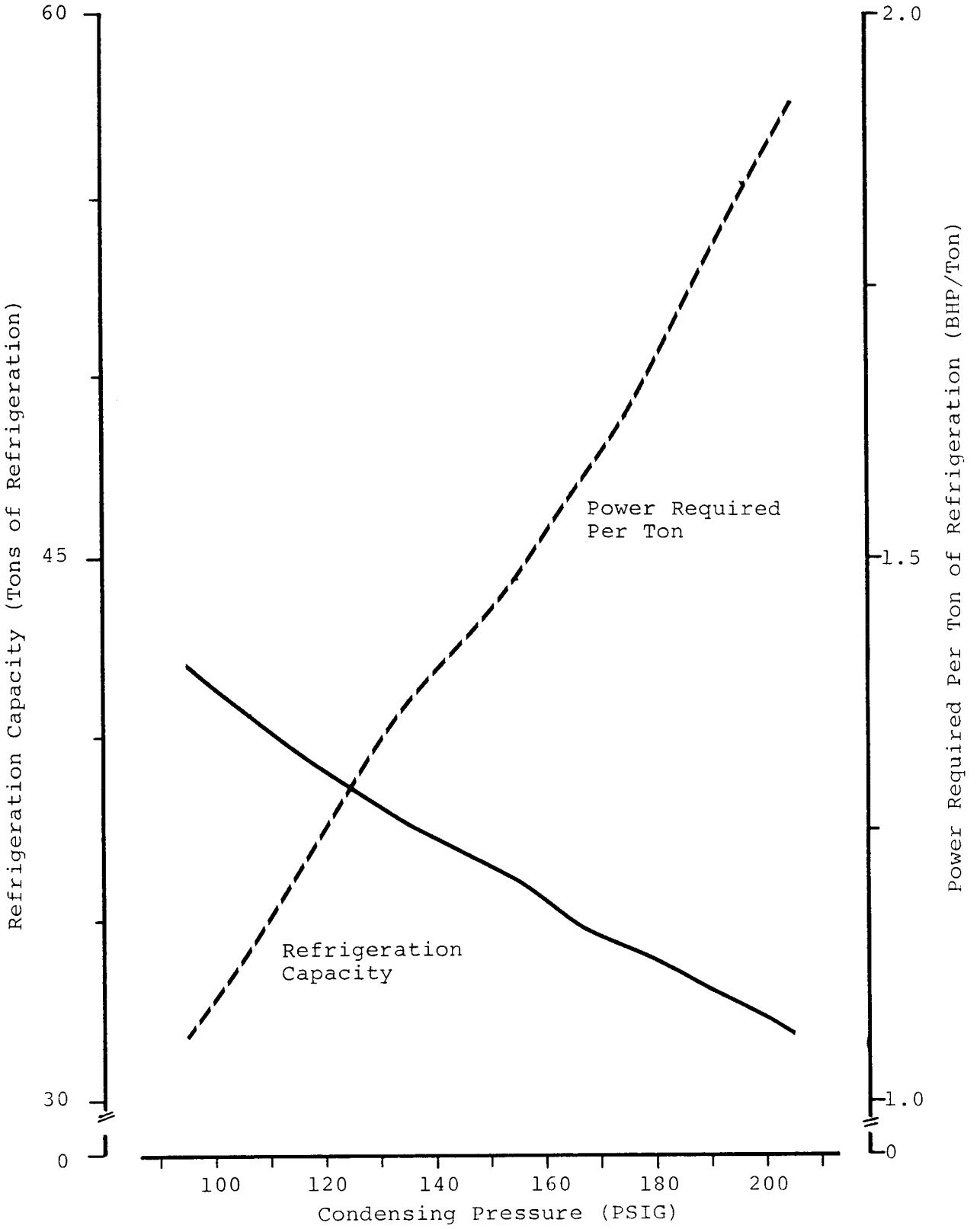

Figure 3-2. **Compressor Refrigeration Capacity and Power Required at Different Condensing Pressures**

"connected" system, or so that different suction headers are attached to various wells and compressors in a "split" system. In the latter case, one suction header (hot line) is attached to wells containing RSW or brine and fish with temperatures above the final frozen storage temperature, and another suction header (cold line) is connected to brined or dried wells held at the storage temperature. The number of compressors attached to either line is adjusted depending on the demand for refrigeration.

Use of a single suction header eliminates valve handling and also eliminates mistakes involved in the multiple header set up. However, in the connected system, changing suction pressure can necessitate readjustment of all the hand and automatic expansion valves. With a split system the suction pressure in the cold line usually does not vary and therefore hand or automatic expansion valve settings are adjusted only when a well is first attached to that header. The range of suction pressure that can be used in a connected system is somewhat limited since the coil temperature in wells with frozen fish must be below the storage temperature.

OPERATION DURING FISH HANDLING

Although fish handling and the operation of the refrigeration system are treated in separate chapters in this manual, they are closely interconnected. The remainder of this chapter briefly describes adjustment of the refrigeration system during fish handling. Chapter IV includes a more detailed description of the brine immersion method for preserving fish, the operation of the brine transfer system, and the temperature changes normally observed during different stages of fish handling.

The goal behind the suggestions given in the following sections is to maintain fish quality. Although every chief engineer wants to do this, conditions encountered during a fishing trip can require that the best available options (not necessarily the preferred ones) be used to handle the fish. When deciding how to cope with a given situation it should be noted that the quality of fish is best preserved by (1) minimizing the time held in RSW or brine, (2) limiting the amount stored in a well (not overpacking), (3) freezing as rapidly and as soon after catching as possible, and (4) storing at the lowest and most stable temperature possible.

Chilling Sea Water and Brine

When beginning to chill sea water and brine, relatively high (40-60 PSIG) suction pressures should be used. This helps to remove oil from the coils because the warm water temperature reduces the oil's viscosity and the high suction pressure increases the flow rate of the ammonia. Higher suction pressure puts added strain on the electric motors and V-belts driving the compressors and on the coils and suction headers. Consequently, these components must be in good condition if such high suction pressures are used.

With suction pressures above 40 PSIG, frost will not form readily on the coil discharge, even when it contains some liquid ammonia. In this case, to determine when liquid ammonia is reaching the end of a coil, the chief engineer must compare the temperature at the coil inlet and discharge by touching each location. When the temperature is the same and the coil discharge does not readily warm up when touched, the coil has liquid ammonia throughout. The bottom half of the coil should be felt for best results. The position of liquid ammonia along the suction line may be found by manually checking the temperature.

As the temperature of the sea water falls, the hand expansion valves must be cut back to prevent flooding the system. The system floods relatively quickly, necessitating constant attention to refrigeration system adjustment. Therefore, this procedure should be used only when interruptions are unlikely. When the water temperature comes within 15°F of the evaporating temperature, the suction pressure should be lowered about 5 PSIG by increasing the number of compressor cylinders under load and/or closing the hand expansion valve a little more.

When sea water reaches 29°F, half a degree above its freezing point, the BPR can be employed to hold the temperature constant, preventing ice from forming on the coils. Ice acts as insulation and interferes with heat removal. The BPR is normally set at about 37 PSIG. At 37 PSIG, liquid ammonia boils at 23°F; however, ice does not normally form at this setting because the pressure in the coils is usually above 37 PSIG--the BPR gauge measures the suction pressure after the pressure drop along the coils.

Some chief engineers prefer to alternately form ice and then shut off the refrigeration and allow it to melt. This procedure can cause problems if the ice does not melt completely during loading and packing. The fish capacity of the well and the ability of the refrigeration system to chill the fish is limited by the remaining ice. On the other hand, ice represents stored refrigeration that assists the system to remove heat from the fish during initial chilling. However, it is difficult to estimate the amount of ice needed for this purpose. Since overestimation results in the problems previously described, the amount of ice should be limited.

Chilling the Fish

The hand expansion valves serving the well(s) to which fish will be added should be opened and the BPR disconnected just prior to brailing the fish on board. During brailing and chilling, the amount of frost on the suction lines should be checked regularly to adjust the hand expansion valves and control the flow to prevent either flooding the compressors with liquid ammonia or starving the coils. As the temperature in the well drops, less heat is absorbed by the coils, boiling off less liquid ammonia, leaving more in the coil, and requiring the hand expansion valve to be cut back periodically. Following brailing, the suction pressure should be held as low as possible until the temperature is within 1°F of RSW's freezing point or 10°F of the freezing point of brine. The larger difference is required for brine because of the inaccuracies in freezing points measured with a hydrometer (see Chapter IV). The hand expansion valves should then be adjusted and the BPR employed to maintain a constant temperature in the well.

Freezing the Fish

The adjustment of the refrigeration system when freezing fish is the same as that described above for chilling fish in brine. It is preferable to freeze only one well of fish at a time, thus allowing the maximum amount of refrigeration to be applied. Maximum refrigeration should be applied until the temperature in the well is as low as the freezing point of the brine or the operating limits of the compressors allow. At this point the well should be connected to the cold suction line (if a split system is used) and the automatic expansion valves should be applied. If an automatic was not used on the previous trip, the inlet strainer should be cleaned in solvent and the adjusting

spring should be set in the middle of its range to prevent liquid ammonia from flooding through when the valve is opened.

Drying the Wells

Once the desired storage temperature is reached, brine should be removed (unless the well will be unloaded within seven days). The automatics should be adjusted for one to four feet of frost on the coil discharge line. Frequent observation of the position of the frost line and readjustment of the automatics is required during the first 24 hours of operation. Hand expansion valves can be used to control the refrigeration to a dried well in the absence of functional automatics. However, hand expansion valves must be readjusted more frequently.

Preparing to Unload

After a well is rebrined (see Chapter IV, Unloading the Fish), the expansion valves are shut off and they remain off until the brine temperature increases one or two degrees, allowing ice to melt. Then the hand expansion valves are used to maintain the desired temperature, usually 12 to 13°F. Just prior to the start of unloading, the brine is pumped off. Nearly all of the ammonia in the coils is removed by shutting off the expansion valves and connecting the suction lines from the wells to be unloaded to a compressor(s), and running the compressor until the suction pressure is below 5 PSIG. This reduces the amount of ammonia released into a well if a coil is broken. This procedure is repeated whenever the suction pressure in those coils increases to 10 PSIG due to warming of the coils.

CHAPTER IV
TUNA-HANDLING PROCEDURES

PREPARATION FOR STORAGE

Cleaning the Wells

A well should be cleaned thoroughly in preparation for receiving fish. Cleaning involves removing fish flesh, skin, and bone from the well, and washing the well surfaces with a high-pressure sea water hose. Particular attention should be paid to cleaning the screen covering the circulator pump intake and the wells' drains. Thorough cleaning helps to ensure adequate circulation and prevents the buildup of spoilage bacteria prior to the addition of fish.

The wells should be cleaned after they are unloaded at the conclusion of each trip. Decomposition of organic material such as fish flesh may produce a poisonous gas--which can be fatal in an enclosed area like a fish well. If there is a delay before a well can be cleaned, the hatch should be removed and a fan used to aerate the well until work begins. If a person collapses while working in a well, the rescuer should use a lifeline and a self-contained breathing apparatus so that the rescuer will not become another victim.

Wells used to store fuel should be cleaned thoroughly before fish are stowed. A small amount of fuel is sufficient to contaminate the tuna and cause rejection by the cannery. As much fuel as possible should be pumped from the well, the drains opened, all surfaces washed with the high-pressure sea water hose, and the sea water removed. Next, a detergent solution should be sprayed on all surfaces with a high-pressure "choo-choo" gun. The detergent should be a non-flammable, non-toxic

water soluble degreaser approved by the FDA for use on food processing equipment. Particular attention should be paid to the spaces between the ammonia coils and the well surfaces and the inside of the circulator discharge pipe. The detergent should be washed off with the high-pressure sea water hose, and the sea water and detergent removed. The drains should be closed and sea water pumped into the well and the well allowed to overflow over the coaming. After a few minutes, the overflowing is stopped and the circulator pump turned on. After an hour or so, the water is checked for the presence of any fuel slick. If any fuel is found, the detergent wash should be repeated; the well should be rechecked and the process repeated until no evidence of fuel is observed.

If the walls of a well are cracked, fuel will seep into the surrounding insulation. This fuel cannot be removed completely by washing and it can leak back into the well and contaminate the fish. Thus, fuel should never be stored in cracked wells. RSW or brine stored in a cracked well will be absorbed by the insulation, reducing insulating ability and producing hot spots in the well. For these reasons, cracked wells should be repaired as soon as possible.

Preparing the Brine

Brine is prepared at the beginning of a fishing trip by adding a desired amount of salt (sodium chloride) to an empty pair of wells, filling those wells with clean sea water, circulating the sea water until the salt has dissolved, applying refrigeration to the brine, and storing it at 0 to 10°F. The salt used for making brine is #1 grade sea salt, with a grain size equivalent to a rice kernel and containing less than one-half percent organic and inorganic impurities. Salt is either

provided in bulk or in sacks of various sizes. Salt from sources other than sea water must be analyzed to ensure no copper is present. Copper readily combines with protein in the tuna causing a discoloration (metal stain) when the canned fish is retorted.

To calculate the amount of salt to add to a brine storage well, the volume of the well and the desired brine salinity must be known. The salinity desired depends upon whether the brine will be intentionally diluted by leaving some RSW in a well during brining, or whether all the RSW will be removed and therefore dilution will be minimal.

Multiplying the volume of the well in cubic feet times 7.48 (the number of gallons held in one cubic foot) gives the capacity of the well in gallons. The amount of salt that must be contained in each gallon of brine of a given concentration is shown in Table 4-1, under "Pounds of Salt per Gallon of Brine." For example, a gallon of eutectic brine, salinity = 23.3 percent, contains 2.287 pounds of sodium chloride. Since sea water (3.5 percent salt) already contains 0.299 pounds of salt per gallon, an additional 1.988 pounds of salt must be added to each gallon of sea water. Multiplying 1.988 times the well capacity in gallons gives the weight of salt required.

To ensure that all the salt added to a brine well dissolves, the solution must be agitated. A section of hose 15 to 20 feet long, attached to the circulator discharge pipe and hung to the bottom of the brine well, will help to stir the salt as the hose moves back and forth under the pressure of the circulator discharge.

As the concentration of brine increases and/or the temperature decreases, salt dissolves more slowly. When preparing brine with a salinity above 24 percent, the brine

Table 4-1. **Sodium Chloride Brine Characteristics**

Salinity % NaCl by Weight	Freezing Point[b] °F	Pounds of Salt Per Gallon Brine	Specific Gravity	Salometer Degrees	Freezing Point[b] °C
0.0	+32	0.000	1.000	0	0.0
1.0	+31	0.084	1.008	3.8	- 0.5
2.0	+30	0.169	1.014	7.6	- 1.1
3.0	+29	0.255	1.022	11.4	- 1.7
3.5[c]	+28.4	0.299	1.026	13.3	- 2.0
4.0	+28	0.342	1.029	15.2	- 2.3
5.0	+27	0.432	1.036	18.9	- 2.9
6.0	+25	0.522	1.044	22.7	- 3.6
7.0	+24	0.613	1.051	26.5	- 4.3
8.0	+23	0.705	1.059	30.3	- 5.1
9.0	+22	0.800	1.066	34.1	- 5.8
10.0	+20	0.894	1.074	37.9	- 6.6
11.0	+19	0.990	1.081	41.7	- 7.3
12.0	+17	1.088	1.089	45.5	- 8.2
13.0	+16	1.187	1.097	49.3	- 9.1
14.0	+14	1.287	1.104	53.0	- 9.9
15.0	+12	1.388	1.112	56.8	-10.9
16.0	+11	1.491	1.119	60.6	-11.9
17.0	+ 9	1.596	1.127	64.4	-12.9
18.0	+ 7	1.701	1.135	68.2	-14.1
19.0	+ 5	1.805	1.143	72.0	-15.2
20.0	+ 2	1.917	1.151	75.8	-16.4
21.0	0	2.027	1.159	79.6	-17.8
22.0	- 3	2.139	1.168	83.3	-19.1
23.0	- 5	2.252	1.175	87.1	-20.7
23.3	- 6[d]	2.287	1.178	88.3	-21.1[d]
24.0	+ 2[e]	2.366	1.184	90.9	-16.9[e]
25.0	+13[e]	2.482	1.192	94.7	-10.3[e]
26.0	+28[e]	2.599	1.201	98.5	- 2.4[e]
26.4[f]	+60[e]	2.647	1.204	100.0	+15.6[e]

[a]This table applies only to brine at 60°F. For brine measurements taken at other temperatures, add 0.25 to the measured salinity for every 10 degrees the brine temperature is above 60°F, and deduct 0.25 for every 10 degrees below 60°F, before consulting the table.

[b]Temperatures at which freezing begins. As ice forms, salinity increases. With continued cooling, the freezing point is lowered to the eutectic point (the lowest freezing point).

[c]Approximate salinity of sea water.

[d]Eutectic point (the lowest temperature at which a sodium chloride solution will remain a liquid).

[e]Saturation temperature. Reducing the temperature further results in formation of crystals of sodium chloride dihydrate ($NaCl \cdot 2H_2O$) until the eutectic point is reached.

[f]Saturated brine at 60°F.

should circulate until the salinity stabilizes before chilling. Fresh brine should be stored at a temperature 5°F above its freezing point (fp). This safety margin should be increased to 8° to 10°F when storing used brine that has picked up blood, slime, soluble protein, and other "foreign" material from fish. The presence of these substances increases the density of the brine, causing the salinometer to float higher in the brine, indicating a greater salinity than is actually present.

When salt is scarce and/or expensive, brine is often retained and used for several trips. The fluids and protein picked up by brine during extended use cause the measured salinity to be overestimated by an average of 2 percentage points. This discrepancy must be remembered when checking the concentration of brine to be used on another trip. Commonly, sufficient salt to increase the salinity by 2 percent (about 0.2 of a pound per gallon of brine) is added to previously used brine at the beginning of a trip. Since this brine must be kept cold or the organic material it contains will spoil, extra time is needed to completely dissolve added salt.

Characteristics of Brine

Salt lowers the freezing point of water by a predictable amount (Figure 4-1 and Table 4-1). To freeze the fish, the RSW (3.5 percent sodium chloride by weight) with an fp of about 28.4°F, must be replaced with brine of greater salinity and a lower fp. Brines are often identified by their freezing points rather than their salt concentration. For example, brine with a salinity of 19 percent and a 5°F fp may be called a 5° brine.

The lowest freezing point, called the eutectic point, that can be achieved in a sodium chloride brine is -6°F at 23.3 percent salinity. Brine with a concentration less than eutectic

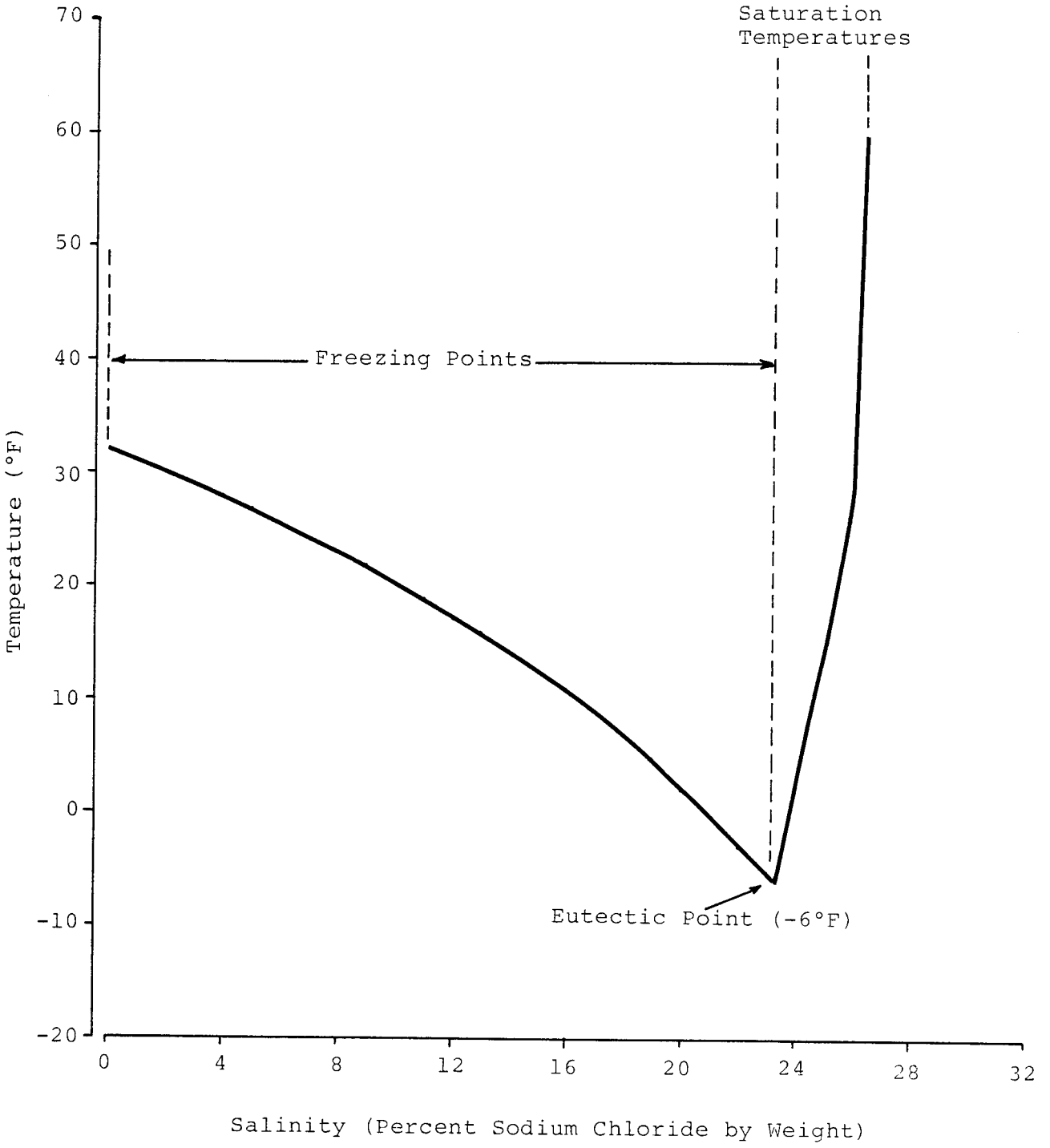

Figure 4-1. **Relationship of Freezing Point to Salinity of Brine**

brine will freeze at a higher temperature. When the temperature of brine is reduced to its freezing point, pure ice crystals form. The salt that was dissolved in the now frozen water dissolves in the remaining brine, increasing the salinity. If heat continues to be removed, the process of pure ice crystal formation and salinity increase continues until the solution reaches the eutectic point. When eutectic brine freezes, a mixture of pure ice crystals and salt crystals (sodium chloride dihydrate) forms.

When brines with concentrations greater than eutectic are cooled below the saturation temperatures (Table 4-1 and Figure 4-1), a precipitate of salt forms. With additional cooling, salt continues to precipitate until the eutectic concentration is reached and then the brine freezes. Thus, the use of brine with a concentration greater than the eutectic point in a well with fish is a waste of salt because increased freezing point depression does not occur.

Measuring Brine Salinity

The salinity of brine is usually measured with a hydrometer, called a salinometer, equipped with a small thermometer and two scales, one indicating the percent sodium chloride by weight, the other giving the freezing point of the brine. The salinometer is calibrated for use in solutions at 60°F. The small thermometer is designed to measure the temperature of the solution. Its temperature scale also shows the percent salt by which the salinity reading must be corrected. In general, 0.25 percent is added to the salinity of the solution for every 10°F the solution's temperature is above 60°F, and conversely, the same amount is subtracted for every 10°F the temperature is below 60°F. For example, a salinity reading of 20.0 percent in brine

with a temperature of 30°F is corrected by subtracting 0.75 percent (3x.25 percent) from the salinity, resulting in a value of 19.25 percent, which is then used to determine the freezing point.

To use the salinometer, it should be placed in a container filled with the brine sample and allowed to float; salinity is read by noting the value where the top of the salinometer emerges from the brine. The temperature of the brine is noted and the correction factor applied to the observed salinity. The plastic carrying case of the salinometer can be used as the brine container.

Occasionally, hydrometers marked with salometer degrees (°SAL) are used. These hydrometers, called salometers, indicate the percent saturation of the solution. The scale is from 0 to 100 °SAL. Since a saturated solution (100 °SAL) at 60°F contains 26.4 percent salt, each °SAL represents about 0.26 percent salt by weight. The procedure for using the salometer is the same as described for the salinometer above, except the correction factor for the salometer is one °SAL for every 10°F above or below 60°F. A table such as Table 4-1 must be consulted to determine the freezing point and salinity after the °SAL measurement is known.

Sequence of Well-Loading

The order in which wells are filled with fish is determined by the trim characteristics of the seiner and the contents (sea water, brine, fresh water, or fuel) of the wells. Since these factors vary depending on the vessel and expected trip length, no standard rules exist regarding loading sequence. For a particular boat, a loading sequence plan should be developed at the beginning of a trip and modified in response to fishing

conditions. In formulating this plan, the chief engineer should try to (1) maximize the number of wells filled with RSW or brine and therefore available for fish storage, (2) avoid drying wells (discussed below) adjacent to wells containing "warm" fuel, sea water, or fresh water, (3) limit the time wells of fuel are adjacent to wells with fish, and (4) avoid storing fish in a well that is between two wells of fuel.

When complete records about the contents and handling of each well are maintained, the planning and executing of preservation of tuna is easier, and the handling techniques that work best can be identified. A sample form for recording important well-handling information is provided in Appendix C.

CATCHING THE FISH

The quality of tuna flesh deteriorates during handling, freezing, and storage as a result of a combination of complex changes in the fish tissue caused by its own enzymes, bacteria, and chemical reactions. The rate of degradation depends primarily upon the temperature of the fish--higher temperatures cause more rapid loss of quality. Rate of spoilage is also affected by the length of exposure to elevated temperatures, the biochemical condition of the fish, and the type and amount of bacteria in and on the fish. Chapter V provides a more detailed discussion of tuna spoilage.

Sea water temperatures encountered by tuna seiners (65°-85°F) are high enough to cause an unacceptable loss in fish quality if the dead tuna are exposed to these temperatures for a prolonged time. The complicated nature of spoilage and the interaction of the many factors affecting the rate of deterioration makes accurate prediction as to how long fish can

be "safely" held at a particular temperature difficult. However, dead fish held in the net more than six hours should be considered suspect.

The best way to maintain quality is to brail the fish on board and reduce their temperature as quickly as possible. This practice also reduces the amount of physical damage that may be sustained in the net due to the weight of the catch and the movement of the net, skiff, and seiner. Normally, tuna remain in the net so short a time that negligible quality loss occurs. Occasionally, due to mechanical breakdowns or extremely large catches, dead fish are held in the net too long and serious spoilage may occur. In these cases, particularly when the sea water temperature is over 80°F, significant amounts of histamine and/or honeycomb (both indicators of decomposition) may form, rendering the fish unacceptable. When a large catch is made, the time dead fish are held in the net can be minimized by (1) holding the net open with a speedboat or workboat while rolling the net back on board (giving the fish room to swim), (2) not pulling bunches of corks at the bow end of the net (enabling the corks to sink) or cutting a few rings from the stern end of the net (allowing excess fish to escape), and (3) using only the bow sack (minimizing the length of the set).

After a prolonged time in the net, the condition of the fish is often checked by squeezing to determine the firmness of the flesh. When fish are judged too soft, brailing is stopped. While easy to use, this method is very subjective and unreliable. Reportedly, on some vessels, fish condition is tested by cooking a steak taken from directly behind the gills, and then inspecting the steak for honeycomb. When used by a person familiar with the appearance of honeycomb, this test will indicate that fish in the net have unacceptable quality. However, failure to find

honeycomb does not guarantee the quality of the fish since individual fish develop honeycomb at different rates and honeycomb formation can continue in the well until the fish are frozen.

Fish that are stuck (gilled) in the net, brought on board as the net is rolled, and sit on the net pile until a set is finished should not be stowed in the wells. These fish usually have torn or abraded skin, smashed or bruised flesh, and longer exposure to elevated temperatures, and are consequently often rejected for canning.

STORAGE IN RSW

Fish are usually brailed from the net and flumed via chutes into a well containing RSW held at 29°F. The RSW used to flume the fish normally comes from the well being filled. Prior to brailing, the brine transfer line to be used to move RSW from well to chute or well to well should be flushed by opening the overboard discharge valve and pumping RSW through the line until the discharge is clean. The large number of bacteria that form in the fluid trapped in the transfer line should not be introduced into a well. At the beginning of brailing, the well to receive fish should be disconnected from the back pressure regulator and refrigeration applied by opening the hand expansion valves or employing the automatic expansion valves. As fish are added to the well, the level of RSW should be adjusted to prevent overflow. When brailing is complete, cold RSW (if available) from another well or warm sea water should be added to raise the RSW level to the coaming, the circulator pump employed, and maximum refrigeration applied.

Tunas are unique among fish because they maintain a body temperature several degrees above the temperature of the

surrounding sea water. Freshly caught tuna have internal temperatures exceeding the sea surface temperature by 4° to $8^{o}F$ for yellowfin and 8° to $15^{o}F$ for skipjack. This internal temperature adds significantly to the heat load, particularly when large catches of skipjack tuna are stored. The rise in RSW temperature by the addition of fish and the time required to cool the fish to $30^{o}F$ depends on the amount of fish added, the ocean temperature, and the amount of previously chilled fish in the well (Figure 4-2).

This temperature rise should be limited because salt penetration and quality deterioration are temperature-dependent (see Chapter V). Topping off wells with cold RSW helps to limit the temperature rise; discarding the RSW after its temperature has risen 5° to $10^{o}F$ and replacing it with colder RSW (if a sufficient supply is on hand) also limits temperature increase.

The amount of time necessary for the backbone temperature of a fish to equilibrate with the RSW temperature depends primarily on the size of the fish (the interior of larger fish cools more slowly) and the loading density.

RSW develops a sour smell after fish are stored for several (7-12) days because of bacterial decomposition of the soluble protein, blood, other body fluids, and particles of flesh and skin. Continued use of sour RSW results in off-odors in the fish. To prevent this sour smell, fish should be stored in RSW no more than five days.

When more than five days of fishing are required to fill a well, the partially filled well should be "foamed" with brine (see the following discussion). This will freeze the fish and greatly increase their storage life.

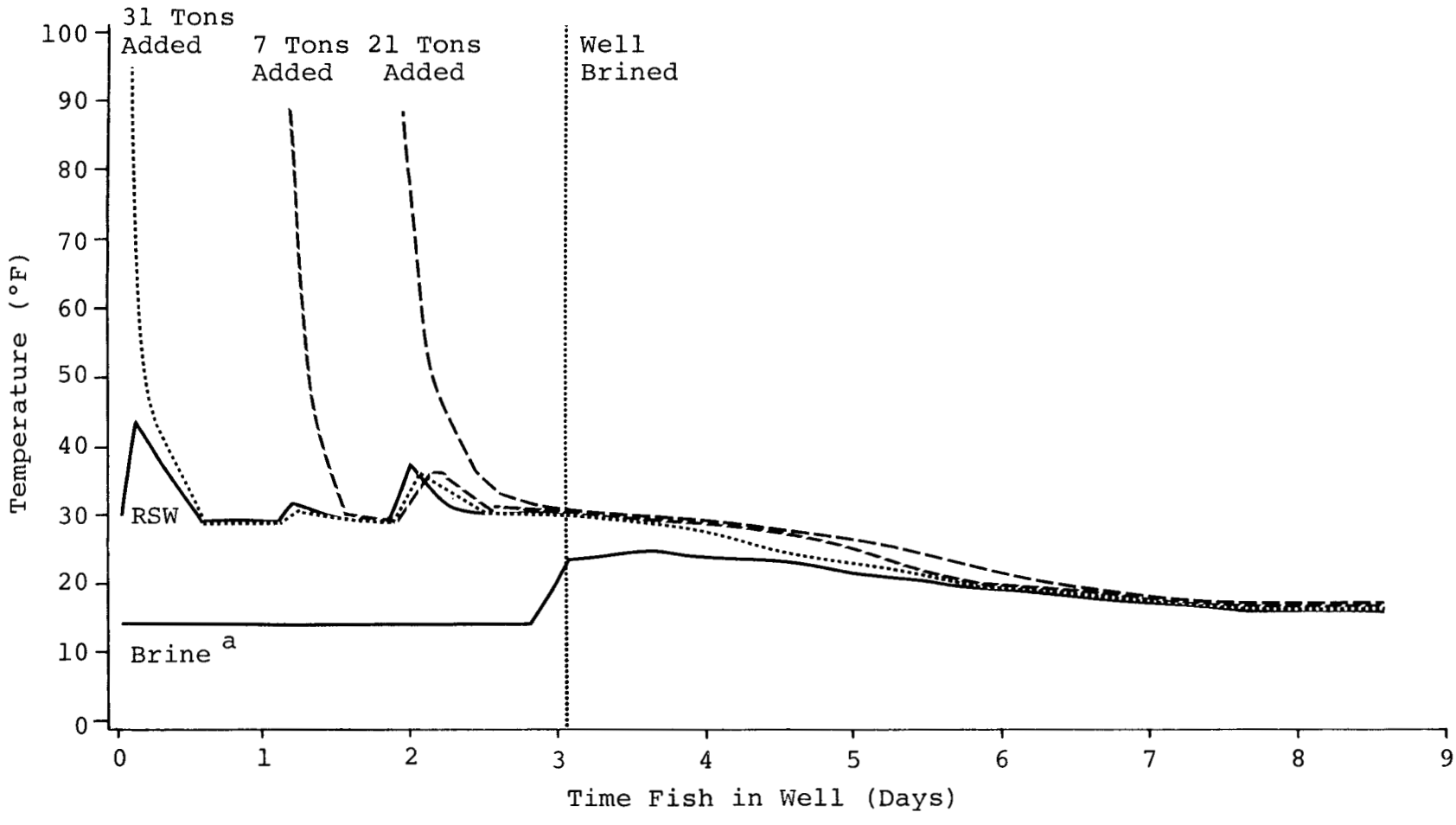

Source: Patterson and Burns, 1984
Note: Data from the port #9 (60-ton) fish well on a seiner built by J. M. Martinac Shipbuilding Corp. The ·····, -—-—-, and - — - lines show the average temperature of 8-pound, 20-pound, and 60-pound tuna, respectively.

[a]Brine held in a different well prior to brining the port #9 well.

Figure 4-2. **Temperature of RSW, Brine and the Backbone of Tuna During Chilling and Freezing**

It is possible to extend the time fish are stored in RSW by replacing the RSW with fresh RSW that has not been exposed to fish. However, this practice increases the risk that some of the fish will spoil since their quality deteriorates every day they are unfrozen.

STORAGE IN BRINE

Fish are often stowed directly into cold brine, due to the absence of sufficient RSW or the preference of the chief engineer. Adding fish to brine causes the brine temperature to increase (Figure 4-3). This temperature rise must be limited to minimize penetration into the fish. Ideally, the brine temperature should not rise above 25°F (the approximate freezing point of fish flesh) when warm fish are added.

The initial brine temperature increase can be limited by (1) pumping off some of the brine in a well (when it reaches 30°F) and replacing it with colder brine from another well, or (2) adjusting the butterfly valves in the transfer lines so the brine circulator systems of a cold well and the "hot" well are interconnected. To prevent crushing the fish at the bottom of the well, no more than half of the brine should be replaced at one time. The brine that has been warmed and pumped off can be quickly cooled and it can then be reused to further increase the efficiency of the chilling and freezing process. Orchestrating such wholesale movement of brine should be carefully planned and monitored, because serious problems could result with the vessel's trim, with fish quality (if brine which has warmed to over 35°F is added to dried wells) and with ice forming in the wells (due to adding brine with too high a freezing point to cold dried wells).

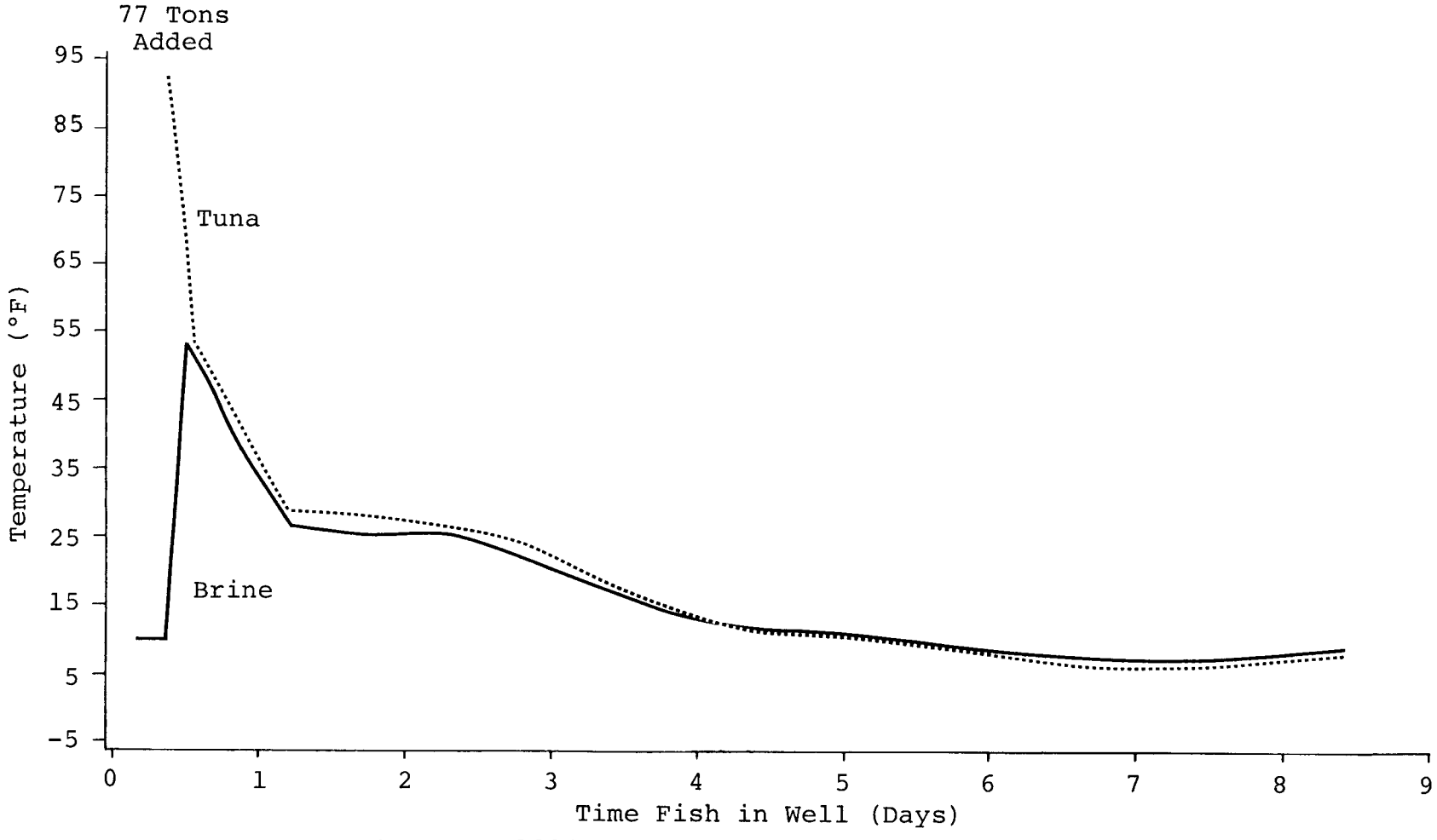

Source: Patterson and Burns, 1984
Note: Data from the port #6 (71-ton) fish well on a seiner built by Burton Shipyards.

Figure 4-3. **Temperature of Brine and the Backbone of Tuna During Chilling and Freezing**

If the added fish do not fill the well, the level of the brine should be lowered to six inches below the surface of the fish. This prevents the fish from floating and chafing due to the vessel's movement. Tuna float in brine with a salinity above about 10 percent. Bigeye tuna may float in RSW until their air bladders and stomachs deflate. The precise salinity at which tuna float depends on the species, the presence or absence of an air bladder, and the fat content of the fish which varies with geographical location and season.

In partially filled wells, the discharge from the circulator pump should be dispersed by means of a shower head type of fitting attached to the discharge pipe or a small holed rack secured below the discharge outlet in the coaming, to increase exposure to cold brine and limit damage to the fish. The aeration of brine containing soluble protein from the fish forms foam--hence the name "foaming" for this method of handling fish. After several hours of foaming, the entire well may be filled with foam. It is then important to check that the circulator pump is moving brine, not just foam. If necessary, brine may be added. A brailer handle pushed down to the tuna through the foam will indicate if the fish are shifting because too much brine was added. Also, small amounts of FDA-approved substances that reduce surface tension and disperse foam ("bubble buster") can be added to the brine to allow direct observation of the fish.

Alternately, wells partially filled with fish may be filled completely with brine, if the rack (described below) is used. However, exposing a relatively small amount of fish to a large amount of brine may cause excessive salt penetration.

To limit the time fish are exposed to brine and reduce the danger of salt penetration, the brine can be pumped out of a

foamed well, once the fish are frozen, and the fish held in the dried well. This should be done if fishing is so slow that a well will be held in the foamed condition for more than two weeks. When more fish are caught, brine must be reintroduced into the dried well. Minimizing the brine temperature rise in this situation is crucial since salt uptake and quality deterioration are accelerated by repeatedly freezing and thawing fish.

If a large amount of fish is needed to fill a dried well, the brine temperature rise can be limited by adding small (5 to 15 tons) amounts of fish from several sets rather than filling the well all at once. Unfortunately, this results in several partially filled wells, complicating the handling of the wells and the maintenance of vessel trim.

PACKING THE WELLS

The process of filling a well is called "packing" or "topping off," although under current practices wells often are not filled to capacity. When the tonnage from a set is sufficient to fill a well, the normal stowing procedure is followed until the coaming of the well is filled with fish oriented with their heads down, a condition called "tails" or "tails up." The RSW is then pumped out of the well and the fish settle (pack) in the well. More fish are then added until the level of fish is a desired distance from the bottom of coaming.

The amount of fish stored in a well affects the quality of the fish, the ability of the refrigeration system to chill and freeze them, and the ease of unloading. In general, the more densely packed a well is, the greater the incidence of deformation and split skin, the slower the heat removal and the

more difficulty encountered during unloading. The higher price usually paid for better quality fish, the importance of rapid chilling and freezing to reduce salt uptake, and the need to unload fish with backbone temperatures below 14°F to meet cannery and transshipper requirements have caused most chief engineers to pack wells at less than maximum density. This results in about a 15 percent reduction in the amount of fish carried on a "fully loaded" vessel. Every time a well is packed, the chief engineer is required to weigh the desire for top quality fish against the economic benefit of increased hold capacity.

Generally, fish are added until their level is about 18 to 36 inches below the bottom of the coaming. This varies depending upon (1) the size of the fish, (2) the volume and shape of the well, (3) the length of time the fish were held in the net, (4) the current load on the refrigerating system, (5) the expected method of unloading, and (6) the condition (frozen or unfrozen) of the fish previously stored in the well.

Small fish (less than 10 pounds) pack more tightly than large fish, so many chief engineers maintain a larger distance between the bottom of the coaming and the level of fish when a well is filled with small fish. However, problems are often encountered when unloading wells filled with large (above 50 pounds) yellowfin from vessels packed this way. Large fish are more difficult to unload because of their greater surface area (often they are frozen together) and the length and strength of their tails which are easily entangled. To avoid problems, wells with large fish should be filled no closer than 24 inches to the bottom of the coaming.

In smaller wells (less than 45 tons rated capacity) and wells with an elongated (rectangular) shape, the fish level is

often less than 18 inches below the coaming. Fish tend to pack less in these wells and fewer problems with unloading and/or smashing of fish are encountered. Conversely, a distance greater than 18 inches must be maintained in large wells (above 90 tons).

When dead tuna (particularly skipjack) remain in the net for some time, the flesh becomes soft, and, when loaded, packs closely and squashes and splits more easily. Therefore, wells containing soft fish should not be tightly packed.

If fishing is good, several wells may be filled or brined on successive days; this places a maximum load on the refrigeration system. In this situation, limiting the amount of fish per well ensures the presence of enough secondary refrigerant (RSW or brine) to permit rapid chilling and freezing.

If the fish are to be unloaded with a backbone temperature of 20°F or above, packing density may be greater than if the backbone temperature is below 14°F. At 20°F the fish bend somewhat, allowing more tightly packed wells to be unloaded without undue damage to the fish.

If the "floating off" technique is to be used during unloading, wells filled with large fish require 36 inches between the fish and the bottom of the coaming, although 18 inches is sufficient for wells containing smaller fish. When a standard unloading--with the unloading crew working in the well and removing fish manually--is anticipated, the level of fish should be 24 inches below the coaming, regardless of the size of the fish.

Less space is needed in a foamed well because the fish in the bottom of the well are frozen. These fish have already

expanded during freezing (discussed below), and consequently will occupy no additional space, and, as long as they remain frozen, will not be damaged easily. Thus, foaming partially full wells helps to prevent overpacking.

If all the RSW in a well is removed during packing, the fish at the bottom of the well are subjected to 5 to 10 pounds per square inch of pressure from the fish above them, which often results in misshapen and broken fish.

A better approach is to remove only enough RSW to allow for the addition of fish. Adding three to four brailers of fish to a well after the "tails up" condition usually gives the desired loading density if a standard unloading is expected. Only two additional brailers of fish should be added if the fish will be "floated off." Wells filled with only large yellowfin, should have only two brailers of fish added after "tails up." This technique reduces the amount of pressure exerted on the fish at the bottom of the well and minimizes the volume of cold RSW pumped overboard if sufficient RSW storage is not available.

Packed wells can be refilled with either RSW, sea water, or brine. RSW is preferred because the chance of a problem is minimized. Use of sea water slows the rate of cooling and should be avoided, particularly in wells containing fish held in the net over six hours. If brine is used it is important to limit both the brine's temperature rise and the time needed to freeze the fish to reduce salt penetration.

After a well is filled with fish, a wooden grating or rack is secured below the coaming by placing boards so they extend diagonally under the edges of the hatch coaming. As the well is refilled the rack and boards must be checked to prevent the rack

from slipping and allowing the fish to rise into the coaming. Refilling continues until the circulator discharge pipe in the coaming is covered. This prevents excess motion of the liquid, which could cause chafing of the fish and a stability problem for the vessel. As soon as the well is refilled, the circulator pump is turned on and the hand expansion valves are opened as far as possible without flooding the system with liquid ammonia. To protect the fish below the rack, the circulator discharge pipe should be positioned so the discharge hits the rack at an acute angle or boards should be nailed to the rack where the discharge hits.

BRINING THE WELLS

Under the procedure most commonly used for brining a well, all the RSW in the well is pumped out and the well refilled with cold ($0^{o}F$) brine with an fp of $-5^{o}F$ and a salinity of 23 percent. A popular variation of this method calls for dilution of the brine by leaving an amount of RSW in the well when brining. In this method, the brine salinity is normally adjusted to between 18 and 20 percent (fp = 2° to $7^{o}F$), providing a margin of 5 to 13 degrees between the storage temperature (usually 12° to $15^{o}F$) and the brine freezing point. This margin ensures that ice will not form in the well and compensates for the inaccuracy of hydrometer salinity measurements due to the presence of foreign material. Use of lower salinity brine slows salt penetration, reduces the upward pressure exerted on the fish by reducing their buoyancy, and limits the amount of dense brine used for each well.

Some chief engineers adjust the brine salinity twice, making lighter 13 percent ($16^{o}F$ fp) brine for use when freezing the fish to about $21^{o}F$ and then increasing the salinity to 18 or 20 percent to allow the storage temperature to be reached. This

method exposes unfrozen fish to the smallest concentration of salt, but it can result in very slow freezing if the brine salinity is too low and it begins to freeze at the same temperature as the fish. Methods for calculating how much brine must be added to a well to produce a given salinity are discussed in Appendix D.

Wells are usually brined 12 to 24 hours after they are filled with fish. This allows the internal temperature of the fish to equilibrate with the RSW temperature, thereby limiting the initial temperature rise of the brine (compare Figures 4-2 and 4-3) and the rate of salt penetration into the fish. Comparison of RSW and the fish backbone temperature (measured with thermocouples--see Appendix E) during initial chilling under actual commercial conditions (Patterson and Burns, 1984) shows that fish less than 40 pounds in weight are in equilibrium with the RSW temperature by the time the RSW drops to 29°F. Larger fish reach thermal equilibrium more slowly, although there is normally a temperature difference of less than 5°F when the RSW reaches 29°F. The amount of heat that remains in these fish contributes only a small amount to the total heat load that must be removed to freeze the fish. Thus, after packing, wells can be brined as soon as the RSW temperature falls to 29°F.

As soon as a well is brined, the maximum amount of refrigeration is applied. The more rapid the heat removal, the better the preservation of the taste, color, and texture of the fish and the less the penetration of salt. Despite the application of more refrigeration, the temperature of the brine increases to 25° or 30°F within a few minutes after brining (Figure 4-2), depending upon the fish temperature and the loading density in the well.

The salinity of the brine decreases due to dilution by RSW remaining in the well and the penetration of salt into the fish. Although fish continue to pick up salt throughout the time they are stored in brine, the apparent brine salinity, as measured by the salinometer, does not change appreciably after the initial period because the soluble protein, slime, blood, and other material from the fish cause an increase in the salinometer readings, counterbalancing the reduction in salinity due to salt pickup.

After the brine has been mixed and diluted, a salinometer reading should be taken. If more salt is needed, sack salt can be added by laying the sack on top of the racks and letting the brine run over the sacks overnight. Leaving the salt in the sack instead of dumping it on the fish reduces salt uptake in the fish at the top of the well. If paper sacks are employed, they must be opened and the loose salt added to the well. In this case, it should be dumped into the path of the circulator discharge, increasing the speed at which the salt dissolves. The same procedure is used when insufficient cold brine is available and it is necessary to make brine by adding salt to the RSW in a packed well. If the well is loosely packed, as described above, about 25 percent of its volume is filled with secondary refrigerant (RSW or brine). Multiplying the weight of salt per gallon of brine at the desired salinity given in Table 4-1 (less the 0.3 pound of salt per gallon already in the RSW) times 1/4 the well's capacity in gallons gives the number of pounds of salt to add. Adding the salt in two batches spaced an hour or two apart reduces the time the fish at the top of the well are in contact with salt crystals. While the salt is dissolving, the refrigeration is applied gradually to avoid ice buildup.

FREEZING THE FISH

Although it is convenient to use 28°F as the freezing point, fish do not have a specific freezing point. Rather, the percent of frozen water in the fish continues to increase as the temperature decreases (as shown in Figure 4-4) with 100 percent of the water freezing at about -70°F. This is due to the complex nature of fish flesh. The water in the flesh is contained in millions of microscopic cells with a wide variety of salts and organic substances (such as protein) dissolved in or associated with the water. As freezing takes place this solution behaves like a brine--some pure ice crystals form, increasing the concentration in the remaining solution and reducing the freezing point.

When water freezes, its volume increases by 9 percent. Since fish are about 70 percent water, and 90 percent of that water is frozen at 20°F, the volume of a fish increases by 6 percent (.09x.7x.9) when it freezes. Expansion continues as the fish temperature decreases and more water freezes (Figure 4-4). This expansion reduces the amount of space among fish in the well, impedes brine circulation, and in overpacked wells, may exert enough pressure to crack the well.

The heat removed from the fish is picked up by the brine which then flows over the coils, transferring the heat to the primary refrigerant (ammonia) for removal from the well. The rate at which the brine can transfer heat depends partly on the speed at which it flows over the fish and coils. If the amount of space between the fish is limited due to overpacking, brine will pass slowly and heat removal will not be optimal. Therefore, overpacking should be avoided.

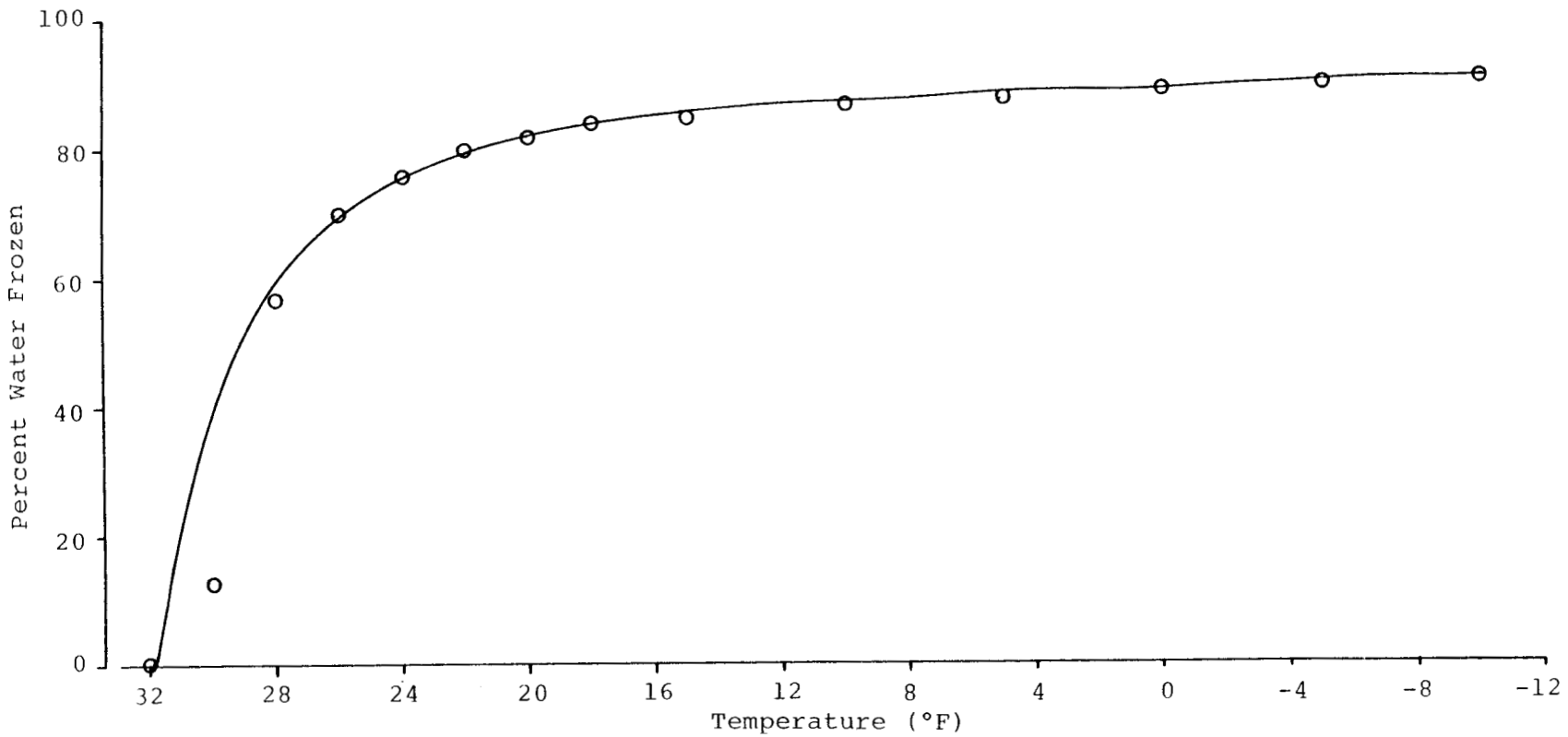

Source: Riedel, 1966
Note: Line fitted by eye.

Figure 4-4. **Percent of Water in Fish Muscle Frozen at Various Temperatures**

The rate of heat removal is a direct function of the temperature difference between the fish and the brine; the greater the temperature difference, the more rapid the cooling rate. The temperature of the brine is determined primarily by the suction pressure in the coils, although the freezing point of the brine sets the lower limit for the brine temperature. A discussion of the operation of the refrigeration system used for freezing fish is given in Chapter III.

During freezing, the temperature of the brine and fish in a brined well decreases steadily until a period of "thermal arrest" occurs (Figures 4-2 and 4-3). At this point, most of the water in the fish freezes, releasing the latent heat of fusion. A discussion of the thermal properties of fish, the reason for the plateau in the temperature graph during freezing, and the amount of heat removed from the fish during various stages of handling is given in Appendix A. The importance of rapid freezing for maintaining quality is discussed in Chapter V.

The speed at which a well full of fish can be frozen also depends on the size of the fish. Smaller fish have a larger surface area to volume ratio than larger fish and consequently give up heat more readily--compare the shape of the broken lines after brining in Figure 4-2. Patterson and Burns, 1984, found that, on the average, the backbone temperature of fish 10 pounds or less reached 20°F two hours after the brine temperature fell to 20°F. The 40-pound or larger fish needed 29 hours of exposure to brine at 20°F or less for their backbone temperature to reach 20°F.

DRYING THE WELLS

Drying wells (removing the brine from a well of frozen fish) has not been a standard practice aboard most modern seiners,

although it was a common and often necessary practice aboard baitboats and converted purse seiners during the 1960s. The practice has recently regained popularity.

The advantages of drying wells include (1) a reduction in the time fish are exposed to dense brine and a consequent reduction in salt uptake, (2) a decrease in the amount of dense brine used during a trip, and therefore the amount of salt that must be purchased, (3) an increase in the refrigeration capacity available for other wells, since dry wells require less refrigeration to maintain a given storage temperature, (4) reduced wear on the circulator pumps, because the pumps are not run while the wells are dry, (5) less load on the auxiliary engines because less electricity is needed to run the circulator pumps and ammonia compressors, and (6) decreased fuel consumption due to reduced demand for electricity and reduced weight of the vessel.

Usually all the wells are dried except for the last wells filled. This allows brine to be saved for unloading and reuse on the next trip. The temperature in wells held wet should be maintained as low and with as little fluctuation as possible. If there is a delay of more than five to seven days before unloading, the wet wells should be dried.

Often the refrigeration to a well is stopped for a few hours before pumping the brine out to allow any ice which formed on the coils or bulkheads to melt. This improves the ability of the coils to remove heat (since ice is an insulator), and facilitates unloading. The temperature of the brine should not increase more than one degree during this temporary refrigeration stoppage.

A well should not be dried until all the fish are frozen completely and are close to equilibrium with the brine

temperature. Heat cannot be removed quickly from a dry well due to the poor heat-conducting characteristics of stagnant air. To lower the temperature of the fish dramatically after the well is dried, a considerable temperature difference must be maintained between the frozen fish and the ammonia coils. This temperature difference tends to cover the coils with ice, reducing their efficiency, and causes dehydration of the fish.

The time required to freeze a well of fish and reduce the temperature of the fish varies with the size of the well, the size of the fish, and the amount of refrigeration applied. By monitoring the backbone temperature of fish with thermocouples and a digital thermometer, Patterson and Burns, 1984, showed that the internal temperature of fish could be reduced to 10°F after a total of three days in brine. They also observed that fish were frozen and their temperatures were within 3°F of the brine temperature by the time the brine reached 15°F. These observations have been corroborated by chief engineers who are also using thermocouples. The fabrication and use of the thermocouples and digital thermometer are described in Appendix E.

Prior to the use of thermocouples, it was common to hold brine in a well for an additional 72 hours after the brine dropped to the desired storage temperature before drying the well. In light of the above findings, this practice unnecessarily prolongs the tuna's exposure to brine. Wells can and should be dried as soon as the brine temperature is reduced to 10°F.

To dry a well, as much brine as possible is pumped from the well. The brine can be used in another well or stored. The small amount of brine remaining in the dried well is allowed to

run out of the well into the pipe alley by opening the drain located in the lower edge of the inboard bulkhead. When the brine flow stops, the drains are closed.

As the brine is draining, the hatch area should be sealed and insulated to prevent spoilage of the fish directly below the rack. The insulation may consist of sheets of plastic ("Visqueen") placed over the rack, covered with overlapping empty salt sacks, and held down with a three-inch layer of loose salt. Although this arrangement will reduce air movement, it is not as effective as covering the rack with waterproof insulation. Bolting the hatch in place, covering it with a sheet of plastic, and tying the plastic down so that it overlaps the seam between the hatch and coaming prevents water from leaking into the well and further limits air movement.

If thermocouples are installed, the temperature of fish in dried wells can be monitored directly. Otherwise, the drains from the dried wells should be opened daily for several days following drying, and weekly thereafter. Any fluid coming out should be checked for odor, color, and taste. Off-odors and bright red, odiferous, and rotten-tasting fluid indicate improperly refrigerated, spoiling fish. If these conditions are found, rebrine the well immediately and hold it at as low a temperature as the brine salinity allows.

During dry storage, the average backbone temperature of the fish decreases slowly, on the average 0.3^{o}F per day (Figure 4-5). Thus, when the refrigeration system is adjusted as described in Chapter III, the influx of heat from outside the well (the wall-heat gain) and a small amount of the sensible heat in the fish are removed. The temperature of the fish beneath the rack does not follow this pattern; rather, it increases quickly by 13°F, on

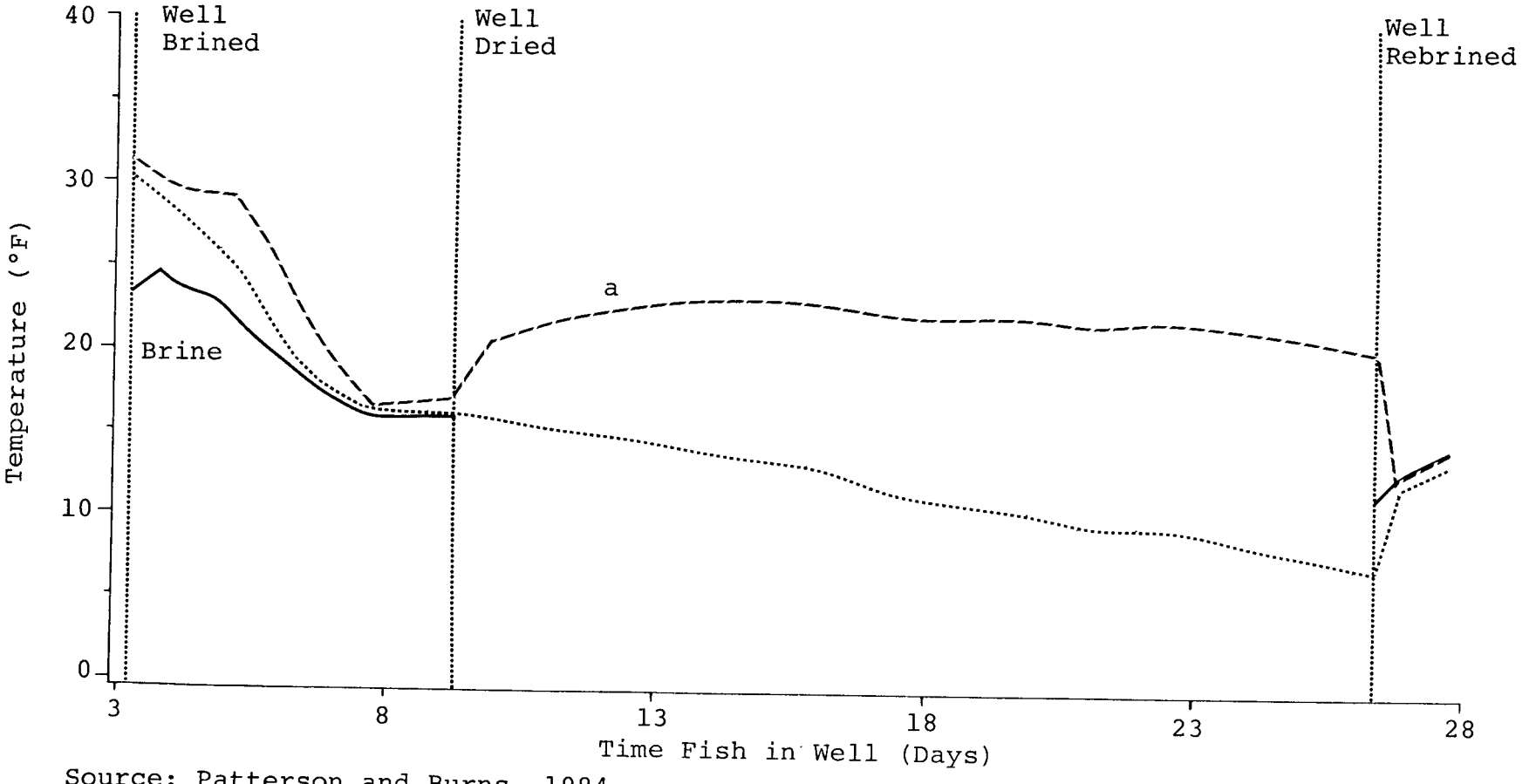

Source: Patterson and Burns, 1984
Note: This graph is a continuation of Figure 4-2. The ····· and — — — lines show the average temperature of the fish and the maximum temperature among all fish, respectively.

[a]The fish in the center of the hatch opening at the top of the well had the highest temperature when the well was dried.

Figure 4-5. **Temperature of Brine and the Backbone of Tuna During Freezing and Storage in a Dried Well**

the average, as soon as the well is dried, and remains at that level until rebrining.

As soon as brine is removed, the temperatures along the bulkheads, floor, and overhead begin to diverge (Figures 4-6 and 4-7). Surface locations have been observed to have temperatures over 45°F, even though the average temperature in the wells is at or below 15°F (Patterson and Burns, 1984). Positions exhibiting these higher temperatures were located on bulkheads between a well and the engine room (Figure 4-6), where there are gaps of one foot or more between ammonia coils, or in the middle of unloading doors when the adjacent well was filled with sea water (Figure 4-7). These elevated temperatures are confined to small areas since thermocouples positioned on lines that were four to seven inches off the surface by these locations did not show similarly elevated temperatures, and fish removed from these locations showed no signs of spoilage.

The temperature of fish at unloading doors is influenced by the temperature in the adjacent well. Elevated temperatures (above 25°F) are not found when the adjacent well is held at 30°F. By carefully planning the sequence in which wells are filled, it is possible to ensure that dried wells are always adjacent to chilled wells.

On older vessels, the well insulation may have deteriorated in certain spots, particularly if it has been exposed to water because of a leak. Evidence of this is excessive ice formation on the exterior of bulkheads, and/or the spoiling of fish lying against such a spot. Installing a wooden rack or metal screen (similar to those used on the unloading doors in baitboats) over the coils in this area will hold the fish away from the source of heat. This will increase the insulation by providing a dead air space when the well is dried, and will eliminate the problem.

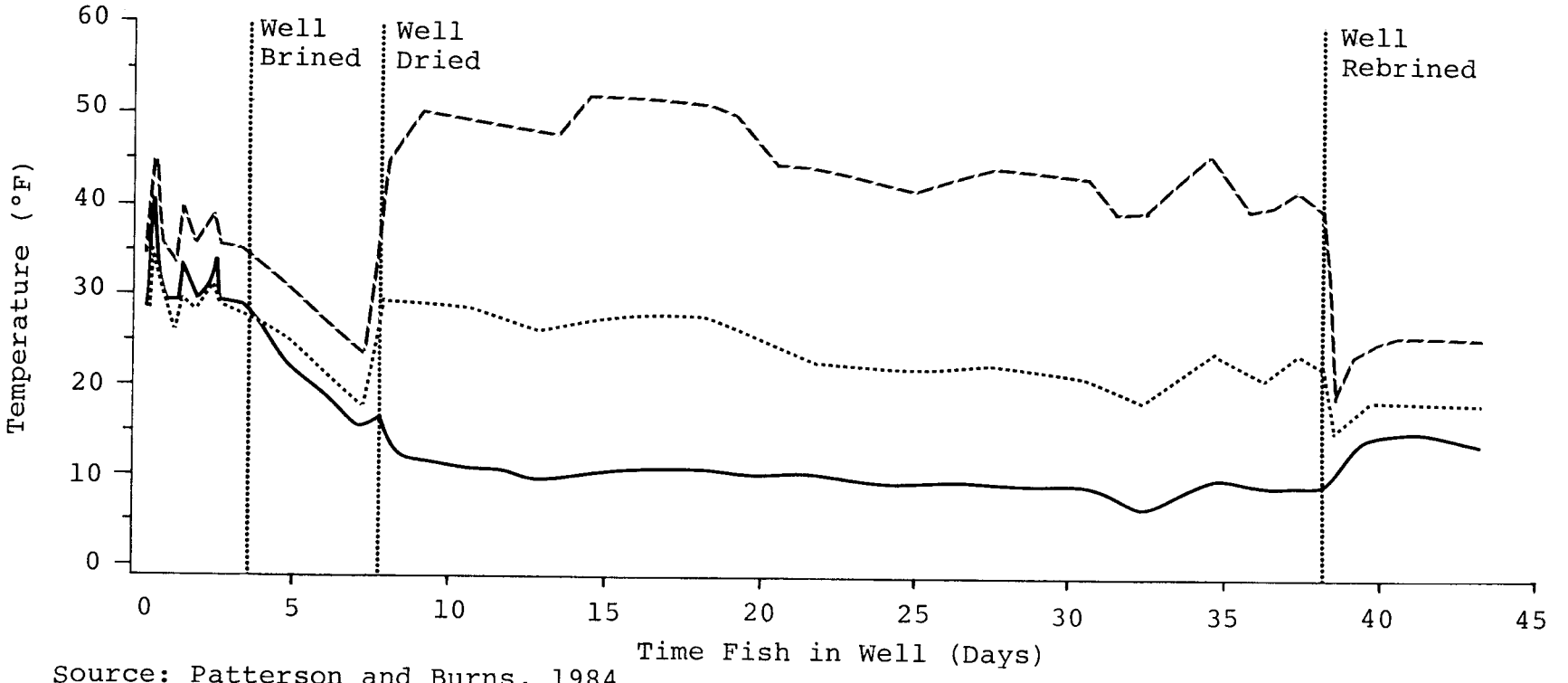

Source: Patterson and Burns, 1984
Note: Data from the port #3 (57-ton) fish well on a seiner built by J. M. Martinac Shipbuilding Corp. The ·····, ·—·—·, and ——— lines show the average temperature of the well surfaces, the maximum temperature of the well surfaces, and the temperature in the interior of the well, respectively.

Figure 4-6. **Temperature in the Interior and on the Surface of a Well During Storage of Tuna**

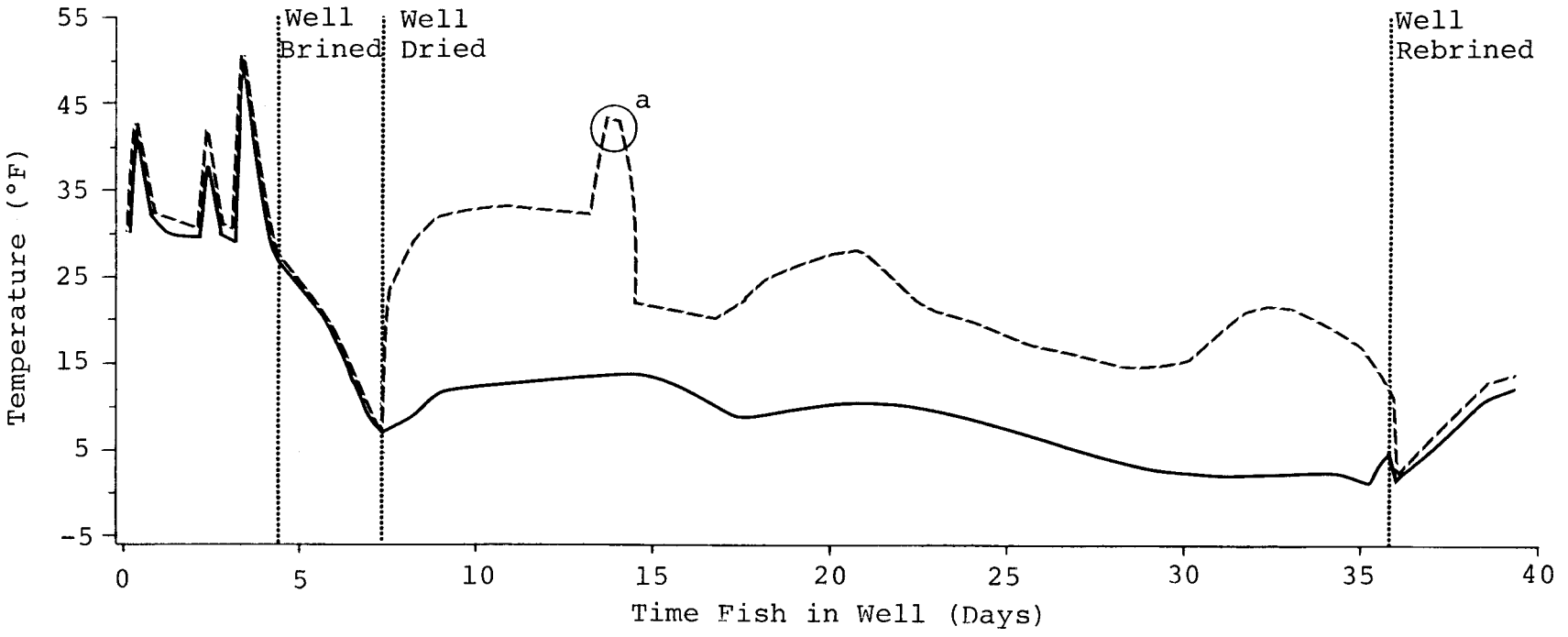

Source: Patterson and Burns, 1984

Note: Data from the starboard #5 (63-ton) fish well on a seiner built by Burton Shipyards. The - - - and ——— lines show the maximum temperature of the well surfaces and the average temperature in the interior of the well, respectively.

[a]Temperature at the middle of the unloading door when the adjacent well was full of 82°F sea water.

Figure 4-7. **Temperature in the Interior and on the Surface of a Well During Storage of Tuna**

UNLOADING THE FISH

At most canneries tuna are unloaded with a backbone temperature of 14°F or less. The same condition is necessary to receive a clean bill of lading when transshipping fish. This simplifies the preparations for unloading and helps to maintain the quality of the fish since the tuna are not thawed.

The reintroduction of brine to dried wells (rebrining) is usually the first step in preparing to unload. This is done to melt ice and to achieve a uniform temperature throughout the well (Figures 4-2 and 4-7), thereby reducing the force the unloaders must apply to separate the fish. The average fish temperature in a well dried for a few weeks is between 4°F and 13°F. Wells dried for a longer time generally have lower average temperatures. The brine added during rebrining must have a sufficiently low freezing point to avoid forming ice when exposed to these temperatures. Consequently, brine with a freezing point between 5°F and -3°F (salinity from 19 to 22 percent) is required.

If brine with this concentration is available it is pumped into the well(s) to be unloaded first. Usually, existing brine must be fortified with more salt, or "fresh" brine must be prepared in the well. The amount of salt needed is calculated based on the assumption that 25 percent of the well's capacity is occupied by brine and on the known amount of salt in sea water or the available brine (see the "Brining the Well" section).

If fresh brine is to be made, the salt is dumped onto the rack and dissolved by spraying it with clean sea water from a deck hose. As soon as sufficient brine is in the well to allow the circulator pump to maintain suction, the brine is circulated

while the addition of sea water continues. The freezing point/salinity is then measured with the salinometer to determine whether enough salt was added, and the brine circulates unrefrigerated until the desired temperature is reached. Wells generally need to be rebrined only 24 hours before this condition is achieved, although most wells are rebrined for a longer time to remove as much ice as possible. Since salt penetration does occur during rebrining, the length of time a well is rebrined should be kept to a minimum. Although a temperature of 10°F or lower could be maintained in a rebrined well, 12°F to 13°F is preferred since these slightly higher temperatures further help to melt interstitial ice. Occasionally, a cannery requests that fish have temperatures between 22° and 24°F when unloaded. This is no longer a common practice since fish at these temperatures are more prone to physical damage during unloading.

The only difference in the procedure used when fortifying existing brine is that the brine is pumped directly into the dried well, dissolving the added salt as it circulates.

In a traditional unloading the brine is pumped out of a well and the hand expansion valves are turned off an hour or so before the start of unloading. If a well is not packed too tightly, and the salinity of the brine used for brining and rebrining and the temperature in the well are properly adjusted, the unloaders should be able to "hook" the fish loose from the mass of frozen fish. Removing the top layer of fish from a well prior to rebrining can improve the ease of unloading because the additional space provided allows the remaining mass of fish to separate.

Vessel trim is affected if one of a pair of wells is unloaded more rapidly. This is corrected by moving brine, if

possible, or concentrating all the unloading effort in the fuller well.

Often fish are unloaded by the "floating off" method when they are to be transshipped. Under this procedure the brine is left in the well during unloading. As soon as individual fish separate from the mass of fish they float to the top of the well since the brine has a greater specific gravity than the fish. Long-handled hooks are used to separate the fish. The floating fish are taken out of the coaming and put in cargo nets, which are hoisted into the hold of the refrigerated cargo ship. As fish are removed, the brine level drops and more brine is added from the brine replenish (or transshipping) lines which run along the overhead of the wet deck. By the time a well is emptied of fish it is full of brine. To have a sufficient supply, brine must be made up in three dried wells for every well that will be floated off during the first day of unloading.

The ease with which the fish float off can be increased by loosening the upper layer of fish. This is done by pumping off the brine after a day or so of rebrining, removing the rack and manually "hooking" apart the fish on the top of the well (including the fish under the overhead). Brine is then readded and circulated overnight.

Occasionally, dried wells are unloaded without rebrining. This reduces the length of time the fish are exposed to brine and therefore limits the amount of salt uptake. In the absence of rebrining, separating the fish is difficult unless the packing, brine concentration, and temperature in the well are carefully monitored. If excessive force (causing significant damage to the fish) and time are necessary with this procedure, the well(s) can always be rebrined, although this practice may delay unloading.

CHAPTER V
TUNA QUALITY CHANGES

GENERAL DESCRIPTION

When a fish dies, its tissues begin to deteriorate due to the combined effects of bacteria, enzymes, naturally occurring chemical reactions, and other chemical and physical conditions present. The speed at which this deterioration occurs depends upon the temperature, the physical condition of the fish (age, sex, spawning condition, nutritional state, etc.), the type and number of bacteria in and on the fish, and the type and concentration of chemicals surrounding the fish. The goal of at-sea fish handling and preservation procedures is to prevent and/or minimize changes in fish quality until the fish are delivered for sale and processing. Because many factors interact and because the chemistry of fish muscle tissue is complex, the exact nature of the quality changes is not fully understood nor can the condition of preserved fish be precisely predicted. It is possible, however, to describe generally the changes in fish muscle which can occur during handling and evaluate the resulting fish quality.

BIOLOGICAL EFFECTS

The muscle tissue of living tuna is sterile (free of bacteria); however, many types of bacteria inhabit the outer surface of the skin, the gills, and the digestive tract. At death, fish lose the natural defense mechanisms that limit bacterial growth, and the number of bacteria increases rapidly--the bacteria count doubles every 30 minutes at 80°F. These bacteria invade the fish tissue and initially attack simple nitrogen-containing compounds, producing a variety of

decomposition products, some of which are toxic and/or foul-smelling. Reducing the temperature to 29°F substantially slows bacteria growth, although a temperature of 25°F is required to completely stop replication, and bacterial enzymes continue to be active above 18°F.

Autolysis, or "self-digestion," is the breakdown of tissue by the fish's own enzymes. When the fish dies, enzyme control is lost and the intestinal lining and skin are broken down, facilitating the movement of bacteria into the muscle. Since the amount of these enzymes is limited, they normally play a lesser role in decomposition than rapidly multiplying bacteria. However, at elevated temperatures (80°F or above), the enzymes can cause significant tissue breakdown--given enough time--even when no bacteria are present.

Histamine

An amino acid called "histidine" is present in all species of tuna. Its breakdown by certain types of bacteria produces the organic compound "histamine." High levels of histamine in tuna have been associated with decomposition and outbreaks of a type of food poisoning known as scombroid fish poisoning. People who have eaten tuna with sufficiently high levels of histamine report nausea, cramps, oral blistering and burning sensation, hot flashes, rash with hives, diarrhea, vomiting, and heart palpitations.

Live tuna contain less than 0.1 milligram (mg) of histamine per 100 grams of fish (0.1 mg percent). The FDA considers a histamine level of 20 mg percent an indication of substantial decomposition and 50 mg percent a potential health hazard. In 1982, the FDA indicated that regulatory action would be taken

against canned tuna containing 20 mg percent or more of histamine. The FDA will also consider regulatory action against tuna with 10 to 20 mg percent of histamine, when a second indicator of decomposition (spoilage odors or honeycombing) is present. Tuna canners routinely monitor the histamine level in raw fish and canned product. Canned tuna contains, on the average, less than 2 mg percent of histamine.

The rate of histamine formation is directly dependent on temperature. The rate is highest around 95°F and decreases markedly below 50°F. Histamine formation accelerates with time; thus more histamine is formed during the last hour of exposure to high temperature than the first. Histamine first appears in the anterior portion (directly behind the gills) of the loins and remains highest at that location. As decomposition progresses, histamine is formed throughout the muscle tissue.

Figure 5-1 shows the rate of histamine formation in the anterior part of skipjack under experimental conditions, as observed by different investigators. The differences among the graphs and the extreme variation (as much as 77 percent) in histamine content observed in fish exposed to the same conditions shows that these graphs cannot be accurately used to predict the histamine concentration in fish exposed to specific conditions. The variations in the graphs and in the histamine data can be explained by the fact that several types of histamine-forming bacteria have been identified, and each probably produces histamine at a different rate and responds differently to changes in temperature. The graphs show that fish held in sea water over six hours may have unacceptably high levels of histamine and that this level can increase dramatically in a short time. At the same time, these results do not ensure that tuna held at elevated temperature for less than six hours will have acceptable levels of histamine.

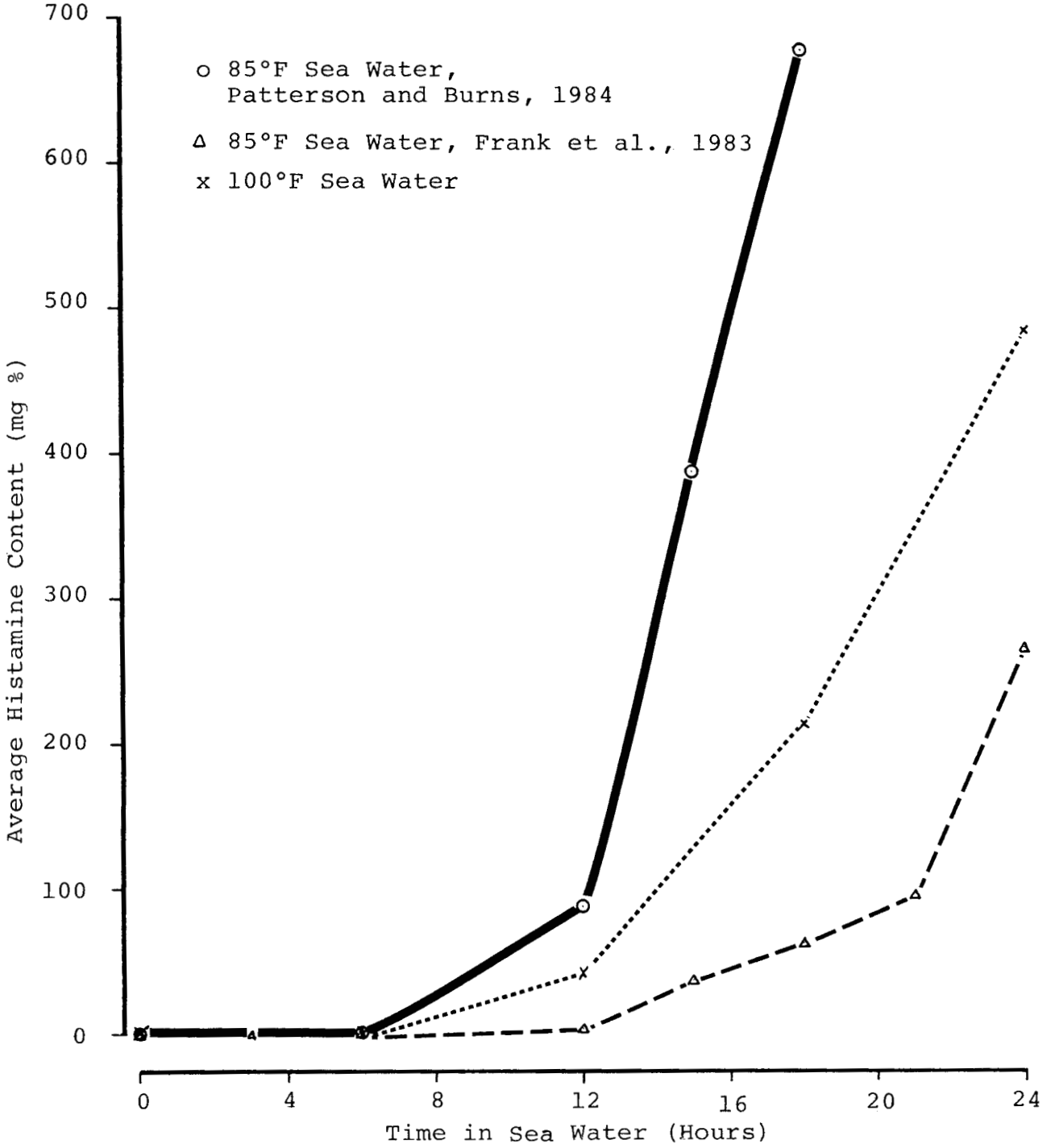

Source: Patterson and Burns, 1984; Frank et al., 1983; and Frank et al., 1981.

Figure 5-1. **Histamine Content of Tuna by Time Held in Sea Water**

The temperature of the fish should be reduced as quickly as possible to minimize histamine formation. Under normal handling conditions, a temperature of 29°F is sufficient to prevent appreciable histamine. During periods of rapid growth, histamine-forming bacteria produce large amounts of the enzymes that change histidine into histamine. Because experiments have shown that a temperature below 18°F is needed to inactivate these enzymes, the temperature of tuna exposed to high temperatures for a prolonged time should be reduced to below 15°F as quickly as possible.

Honeycomb

Honeycomb is a condition produced by the breakdown of the connective tissue that holds the muscle tissue of tuna together. Although the exact cause(s) of this breakdown has not been identified, autolytic enzymes and bacteria have been implicated. Honeycomb is characterized by a pitting of the muscle that appears only in cooked (or precooked) fish. The extent of pitting can vary greatly and flesh with extensive pitting resembles a honeycomb. Honeycomb is recognized by the canning industry and regulatory agencies as a visual indication of decomposition. Honeycomb is usually (but not necessarily) associated with high levels of histamine and other signs of decreased quality.

Honeycomb formation occurs most rapidly at 90°F. The rate decreases significantly below 75°F. Honeycomb generally first appears in the anterior part of the muscle tissue close to the gills, although it may also appear in the posterior (tail-end) part of the loin at the same time.

Figure 5-2 shows the average honeycomb score for tuna held in sea water at 76°F, 83°F, and 90°F, for a given time under

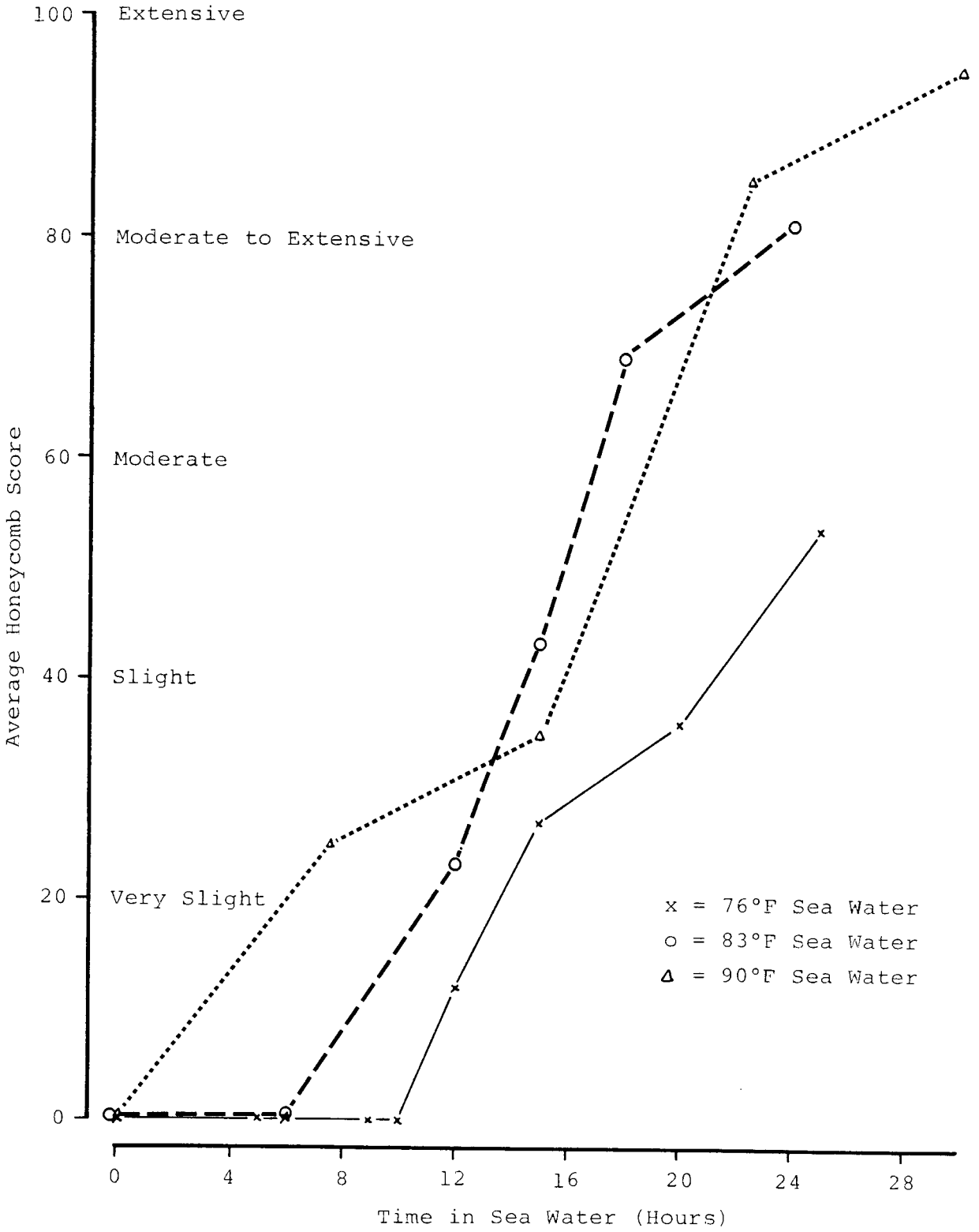

Source: Patterson and Burns, 1984; Frank et al., 1981; Otsu, 1957.

Figure 5-2. **Honeycomb Scores of Tuna by Time Held in Sea Water**

experimental conditions. These scores are based on a 100-point scale in which 0 indicates no honeycombing, and 100 extensive honeycombing. The scale was derived by Patterson and Burns, 1984, to permit the comparison of results of different investigators using different scales. Straight lines were connected to the data points to indicate the general trend of honeycomb formation under varying time and temperature conditions. If data were available, the trend for 90°F would probably show no honeycombing during an initial period, followed by a rapid increase. These graphs show a general trend, but should not be used to predict the condition of tuna after a given time at elevated temperatures because (1) each experiment was conducted differently, (2) data were collected under non-commercial conditions, (3) the estimates of the amount of honeycombing may not be comparable among the graphs, and (4) other factors, not present in these studies, may affect the rate of honeycomb formation.

Figure 5-2 demonstrates that (1) the amount of honeycomb increases dramatically after 8 to 12 hours of exposure to elevated temperatures, and (2) the lower the temperature, the longer the time before honeycombing appears. To prevent honeycombing, fish should be chilled and frozen as soon as possible. Because regulations prohibit the canning of fish with any honeycomb, fish should be checked frequently after six hours of unrefrigerated holding (see Chapter IV).

Off-Colors

"Green" tuna and "caramelized" tuna are two conditions occasionally found during the processing of tuna which had received satisfactory handling. Green tuna assumes a tannish-green color after precooking or retorting. Caramelized tuna

develops an orange to brown color, a caramel-like odor, and sweet taste during precooking.

Greening is associated with high levels of trimethylamine oxide (TMAO), a compound usually found in low concentrations in tuna. Reducing agents (such as the amino acid cysteine) in the presence of metmyoglobin (a muscle pigment) and TMAO produce a green pigment after heating. It is suspected that "green" tuna have consumed food with an unusually high concentration of TMAO. Caramelization is possibly due to the reaction between high levels of ribose sugar and amines (a breakdown product of amino acids), although the reason some tuna contain abnormally high levels of ribose is not known.

Neither of these conditions occurs regularly in purse seine-caught tuna. It is therefore unlikely that the occurrence of these off-colors is related to normal handling and preservation practices.

EFFECTS OF FREEZING

Brine immersion freezing and cold storage limit the effects of bacterial action and autolysis on the quality of the tuna. However, chilling and freezing tuna in sea water and brine produce other changes in muscle tissue. Additionally, the complex compounds that compose muscle naturally break down into smaller, less complex, and less desirable compounds during prolonged frozen storage.

Salt Penetration

Salt penetration occurs as a result of the difference between the salinity of tuna (0.25 percent in living fish) and

that of the sea water, RSW, or brine in which it is stored. Salt uptake occurs when fish are immersed in a solution of greater salinity, regardless of the state (frozen or unfrozen) of the flesh. Figure 5-3 shows that the relationship between the salt content of tuna and the time held in brine is curvilinear with a rapid uptake of salt during the initial exposure, followed by a gradual slowing in salt pickup. The data were obtained from four to seven-pound tuna in good physical condition that were stored less than four days in RSW.

As salt penetration progresses, the salt content of the outermost layer of muscle increases dramatically, while successive inner layers show decreasingly smaller increases. Because large fish have less surface area per pound than small fish, their salt content per pound is usually lower than that of small fish exposed to the same conditions.

The rate of salt uptake increases with (1) an increase in temperature, (2) an increase in brine salinity, (3) a decrease in the amount of frozen water in the fish, and (4) any abrading or splitting of the skin.

Temperature has a greater effect on the rate of salt uptake than salinity differential. Therefore, limiting the rise in brine temperature is important when fish are stowed directly in brine. The rate of salt uptake is dramatically reduced when muscle tissue is frozen because freezing reduces the amount of unfrozen water in the flesh--salt does not readily diffuse through ice. The skin of tuna is a barrier against salt; breaks in the skin allow salt to enter the flesh much faster.

Limiting salt uptake is important because (1) salt penetration accelerates undesirable quality changes in color and

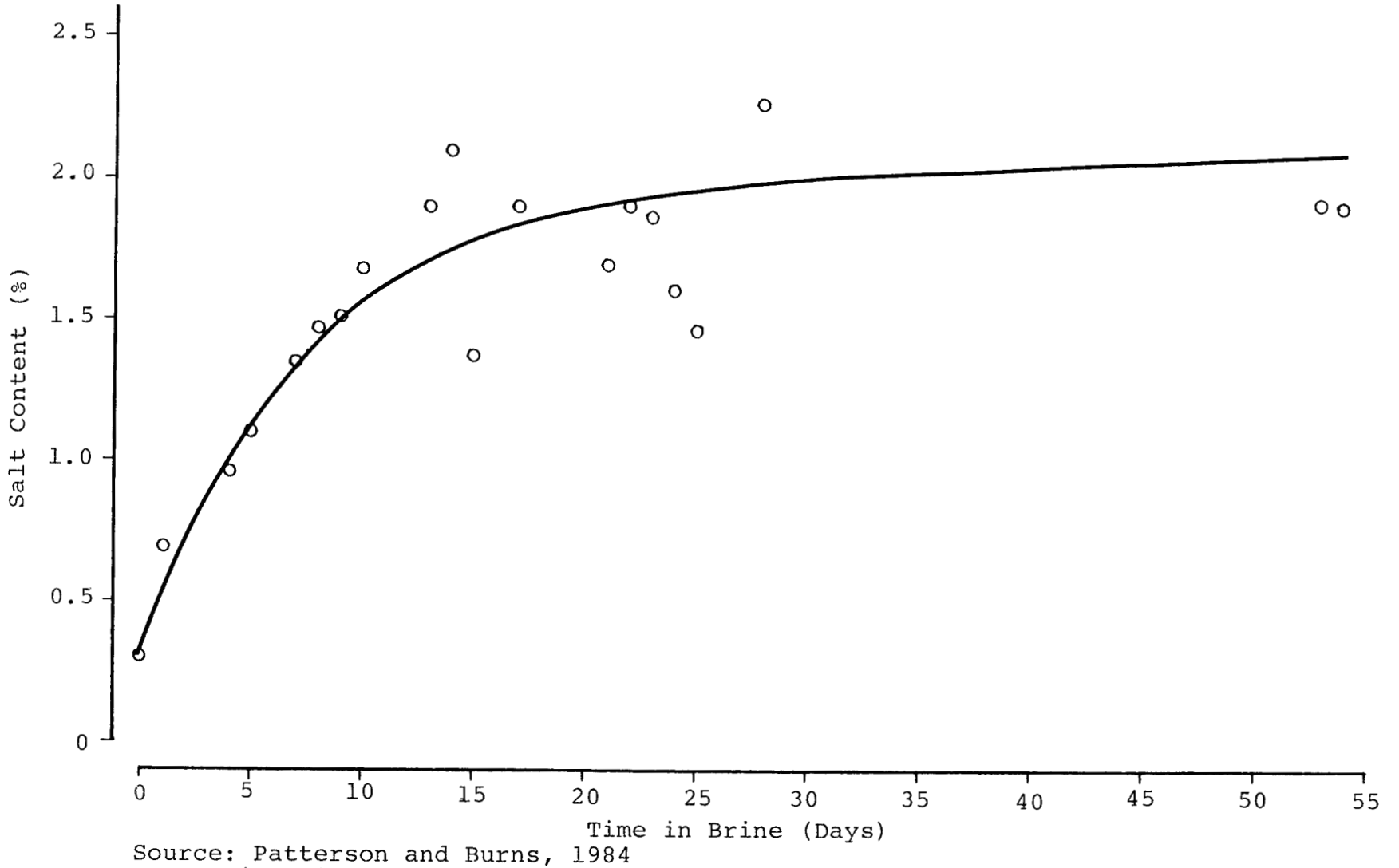

Source: Patterson and Burns, 1984
Note: Line fitted by eye

Figure 5-3. **Salt Content of Tuna by Time Held in Brine**

texture (see below), (2) fish with low salt content are generally more valuable, and (3) processors will not buy fish for human consumption with salt content above a certain level.

Protein Denaturation

A living cell contains (among other things) protein associated with water and salts uniformly dispersed in the form of a semi-liquid gel. During freezing, some of the protein becomes changed in form and function (becomes denatured) as the water and salts disassociate from it (see "Freezing the Fish," Chapter IV). The amount of denatured protein is affected by the rate of freezing--the slower the rate the greater the amount of denatured proteins.

Although the exact cause(s) of changes in the texture of fish is not completely understood, evidence indicates that tough or mealy texture may be associated with the denaturation of protein.

Drip Loss

The liquid remaining in the cells after freezing contains salts, undenatured protein, and flavor-containing compounds. When the flesh is thawed, this liquid escapes through any tears in the muscle cell membrane ("drip loss"). This loss significantly affects fish quality. The slower the rate of freezing and the greater and more frequent the temperature fluctuations during frozen storage, the greater the amount of drip loss during thawing, butchering, and precooking.

Color Change

During frozen storage, the pigments in the muscle tissue gradually combine with oxygen, acquire a brownish tinge, and

darken the color of the flesh. This reaction occurs more quickly at higher temperatures and/or in the presence of salt.

These color changes are important because color is a prime quality characteristic of canned tuna. Consumers generally prefer canned tuna with a light color and the FDA has established regulations governing the range of color allowed in cans of tuna labeled "white," "light," or "dark" meat.

Oxidative Rancidity

The breakdown of fats in the presence of oxygen (oxidative rancidity) produces compounds with undesirable odors and tastes, and often turns the surface of the raw fish yellow or orange. Prolonged storage at temperatures above 15°F, and exposure to a plentiful supply of oxygen (such as occurs in air blast freezing and forced air cold storage rooms) accelerates this process. Oxidative rancidity is not normally a problem on board purse seiners. Temperatures of 10°F or below in dried wells reduces the chances of oxidative rancidity.

EFFECTS OF HANDLING

During holding in the net, packing of a well, and unloading, fish may be subjected to handling that affects their physical condition and contributes to discoloration and salt penetration. The motion of the vessel, net, and skiff can bruise and chafe the fish. Overpacking of a well causes split, broken, crushed, and deformed fish. If crowbars are needed to separate the fish during unloading, some of the fish may be ruined for canning due to cuts or holes made with the crowbars. Often, damage sustained during handling is cumulative and depends on the treatment during

a preceding stage. For example, fish held a long time in the net tend to be soft and consequently are more easily damaged during brailing and loading the wells. Soft fish pack tighter and this can lead to overfilled wells and unloading difficulties. Flesh that is bruised or exposed to digestive enzymes due to split bellies has a darker color.

CONTAMINATION

Any foreign substance in a well of fish may end up as contamination in the canned product. Consequently, wells must be cleaned thoroughly before fish are stored. Only substances approved by the FDA for indirect contact with foods (salt, bubble buster) should be added. Some substances that can cause problems are fuel oil, ammonia, copper ions, paint chips (from improperly painted bulkheads or coils), broken glass, and cigarette butts. The presence of any of these in a can of tuna is unacceptable.

Fuel Oil

Wells used to store fuel oil (prior to storing fish) must be cleaned properly. Circulator suction and discharge pipes and the portions of the coils next to the bulkheads are the areas most frequently missed during cleaning. Wells with cracks in the liner plate should not be used to store fuel because the surrounding insulation may absorb fuel and subsequently cause contamination. Improperly sealed unloading doors and leaking valves in the fuel lines may also cause problems.

Fuel oil produces a characteristic odor in fish. This is most easily detected after thawing or precooking.

Ammonia

Ammonia produces a pungent odor and causes the precooked flesh to have a pink or red color. Fish exposed to ammonia--a toxic substance--are unacceptable for human consumption.

As soon as ammonia is detected in a well containing fish, the expansion valves should be shut off to limit the amount of ammonia lost from the refrigeration system. The well should then be pumped dry, the contaminated fish removed, and the leak located. Leaks commonly occur in the pipe seam at a bend in the coil or under a hold-down clamp.

A gas mask(s) and a sea water hose with a fog type nozzle (to wash the ammonia out of the air) must be available in the event high concentrations of ammonia are encountered. Ammonia should be evacuated from the coil before repairs are made. Although a permanent welded repair is preferable, "splash zone" (an epoxy-like compound) or neoprene and some hose clamps can be used until a permanent repair is made.

Metal Stain

Copper ions have a strong affinity for tuna muscle, and when absorbed by tuna, cause a blue or black stain to appear on the surface of the meat when the cans are retorted. This discoloration does not occur during precooking but forms in the reducing (low oxygen) environment inside the can during retorting.

The most common causes of metal stain are (1) fittings made of copper, brass, or bronze in fish wells or the brine transfer system, and (2) brine made with salt containing copper compounds.

To ensure salt will not cause this problem, the copper content (provided by the manufacturer) should be no more than 2 parts per million (.0002 percent).

CHAPTER VI
QUALITY EVALUATION

ORGANOLEPTIC TESTS

Organoleptic (or sensory) evaluation employs the senses of sight, smell, and touch to judge the condition of fish. This method is quick, inexpensive, and provides reliable results with an experienced observer. In spite of many attempts, no chemical test has been found that is as dependable as the organoleptic method.

In Table 6-1 are listed the characteristics commonly judged during organoleptic evaluation and descriptors for different quality levels for each characteristic. Appearance of eyes and skin and extent of physical damage can be checked when the fish are unloaded in a frozen condition. Other characteristics can be observed only in thawed fish. Organoleptic evaluation is normally employed to determine whether fish are acceptable for canning, but not to assign the fish to various quality classifications. The extent of physical damage is one factor used by processors to adjust the price of raw tuna.

After precooking, the flesh is checked on the cleaning tables for honeycombing. The presence of any honeycomb renders the fish unacceptable for canning and signals the need to increase the testing of fish from the same set and well for histamine as well as honeycomb.

CHEMICAL TESTS

Laboratory tests are used to measure the salt and histamine content of samples of tuna at unloading and at various stages of processing. The sampling procedures are designed to measure the

Table 6-1. **Organoleptic Quality Evaluation of Raw Tuna**

	QUALITY CLASSIFICATION			
	EXCELLENT	FAIR	MARGINAL	REJECTABLE
APPEARANCE:				
Gills	Bright bloody red	Pale red to brown-red	Yellow-brown to dark brown	Yellow-white, slimy
Eyes	Clear, bright and protruding	Sunken, cloudy-white or pink	Sunken, dull white, smashed red	Missing
Skin	Normal luster, color clear and bright	Color dull, no apparent shine, semi-bleached	Normal color and luster gone, very washed and bleached, some muscle structure visible	Gross discoloration, skin in advanced stage of decomposition
ODOR:				
Gills and Belly Cavity	Fresh, typical of recently caught fish	Flat to slightly fishy	Strong fishy, but not stale or sour	Stale, sour, putrid foreign or off-odors
PHYSICAL DAMAGE	No mutilation or deformity	Slight deformities or mutilation	Some splitting of fish slightly broken or smashed	Badly split, smashed or mutilated and/or 20% flesh exposed, belly burn[a]
MUSCLE AND BELLY FIRMNESS	Firm and elastic	Firm, no elasticity	Soft	Mushy, very soft

Source: Modified from Lassen and Rawlings, 1959.

[a]Degradation of the walls and lining of the belly cavity. In advanced stages sufficient flesh is dissolved to expose parts of the skeleton.

average salt content and to detect elevated histamine levels. Fish to be sampled should be chosen randomly from selected parts of a well and all should be intact physically (not split or smashed).

Fish to be checked for salt are segregated into weight categories and each size is tested separately because salt content is size-dependent. The flesh sample cut from each fish should include a complete cross section of the fish from the skin to backbone, because salt concentration decreases from the outermost to innermost layer. Samples taken from a required number of fish of the same size from a well are ground up, and the salt content of the mixture is measured, usually with a chloridometer. If the salt content is above a desired level, the procedure may be repeated using different fish to confirm the results.

Since elevated histamine levels first appear near the gills, samples for histamine analysis should come from the muscle of this part of the fish. After chemical preparation, a fluorometer is used to measure the amount of histamine. This technique is similar to that used by the FDA when checking canned product. If unacceptable concentrations of histamine are detected, additional samples are analyzed to identify the extent of the problem.

Elevated histamine may be detected on the cleaning tables by the sudden appearance of a red itchy rash on the arms and hands of the cleaners. This triggers increased testing for histamine and honeycomb in the lot of fish that is being cleaned.

CHAPTER VII
THE EFFECT OF TUNA QUALITY ON VALUE

The quality of raw tuna at delivery has an economic impact in two ways: (1) the price paid for the fish and (2) the amount (if any) of fish rejected for canning. Consumer reactions to poor quality canned product adversely influences demand, sales, and eventually the price paid for raw fish.

Price and the acceptable level of quality also vary in the international market. The delivery of top-quality fish ensures access to this market and allows the value of the catch to be maximized.

Currently (and for the past few years) the price structure for raw tuna includes two or three categories based on: salt content, amount of physical damage, and backbone temperature when unloaded. The highest price is paid for fish with low levels of salt and no damage, unloaded at $14^{o}F$ or below.

Tuna is a healthful, multi-use, inexpensive, high-protein food. The government and consumers perceive a connection between sodium intake and hypertension (high blood pressure). Most consumers consider canned tuna with excessive salt unacceptable for both taste and health reasons.

The FDA will soon require sodium content to be included in the nutrition information on canned tuna labels. Canned tuna with a salt content more than 20 percent above the level declared on the label is in violation of federal labeling laws. Because the salt content of tuna delivered by United States purse seiners varies, the sodium content on the label must be well above the average level to comply with these regulations. Limiting salt

uptake in tuna will reduce the average sodium content and its variation in the pack, and will allow the declared sodium level to be lowered.

When possible, processors try to blend fish that are high in salt with low-salt fish, to produce a pack with an acceptable level of salt. Since tuna are not mixed into a homogeneous mass before canning (particularly in the solid pack) some high-salt cans are produced, even after blending.

Deformed or gouged fish require extra cleaning and produce lower yields, consequently they command a lower price.

Processors prefer to have fish unloaded with backbone temperatures at or below 14°F because this reduces (1) the amount of fish damaged during unloading and (2) the heat load on the cannery cold storage.

By law, fish that show signs of decomposition (off-odors, off-taste, honeycomb, or elevated levels of histamine) or contamination cannot be canned. Smashed and mutilated fish produce inferior product and cannot be processed efficiently. Canned product which is too salty or has off-colors (green, caramel, or metal stain) is unacceptable to consumers. Consequently, processors will not buy tuna with any of these characteristics.

The weight of fish that is unacceptable for canning during unloading and butchering is deducted from the total amount delivered. The amount of fish rejected during final processing (precooking, cleaning, canning) is multiplied by a factor of two or three to partially compensate the cannery for the weight lost and the costs incurred in processing this fish.

Fish from different wells may be put in the same storage bin during unloading. This is unavoidable when the fish are transshipped to the cannery. Later, if the fish from one of these wells are rejected, it may not be feasible to sort the fish; therefore all of it is rejected. Fish contaminated with fuel oil or ammonia may contaminate others under these circumstances.

To limit the impact of rejects on the value of a load of fish, it is necessary to detect unacceptable fish prior to final processing, and to segregate potential rejects. To facilitate the detection of unacceptable fish, cannery personnel responsible for quality testing should be informed of wells containing fish that were exposed to potentially serious quality altering conditions. These conditions include (1) wells used to store fuel, (2) wells in which an ammonia leak occurs, (3) wells with fish that were in the net for over six hours, and (4) wells in which the temperature remained above 35°F for more than 24 hours after the addition of fish. In addition to minimizing the amount of rejects in one load of fish, supplying this information to the cannery protects the entire tuna industry and the consumer by ensuring the quality of the final product.

CHAPTER VIII
SUMMARY

GENERAL PROCEDURES

Studies on board fishing vessels and in laboratories show that the quality of fish is best preserved by (1) minimizing the time fish are held in RSW or brine, (2) limiting the amount of fish stored in a well (not overpacking), (3) freezing as rapidly and as soon after catching as possible, and (4) storing at the lowest and most stable temperature possible. The procedures used to preserve a catch should be directed toward achievement of these conditions. Because situations vary from set to set, well to well, and trip to trip, it is impossible to give strict procedures that can be applied in all cases. However, the following suggested procedures (summarized from the preceding chapters) are generally applicable in a variety of situations. A discussion of each suggestion and alternative procedures is found on the indicated pages.

REFRIGERATION SYSTEM OPERATION

- Adjust expansion valves so liquid ammonia is present at the coil discharge outside the well (as indicated by the presence of frost). (Page III-1)

- Maintain the lowest suction pressure allowed by the operating limits of the compressors when chilling and freezing fish. (Page III-5)

- Use a back pressure regulator to maintain a constant temperature in wells with cold (29°F) fish in RSW. (Page III-10)

- Use different suction headers for cold wells and "hot" wells. (Page III-8)

PREPARATION

- Thoroughly clean wells before using them for storing fish or preparing RSW or brine. (Page IV-1)

- Maintain RSW at 29° in as many wells as possible. (Page IV-11)

- Prepare brine with 23 percent salinity and a -5°F fp in the largest pair of wells available and hold the brine at 0°F. (Pages IV-5, IV-6)

STOWING

- Brail and stow as quickly as possible. (Page IV-9)

- At the beginning of brailing, increase refrigeration to the wells that will be used. (Page IV-11)

- Move fish through chutes with cold RSW or brine. (Page IV-11)

- Stow fish into 29°F RSW. (Page IV-11)

- Top off well with cold RSW. (Page IV-12)

- Hold fish in RSW for no more than five days. After this, brine (foam) the wells, drop the temperature to 10°F and dry the well if additional fish are not readily available. (Page IV-12)

- When adding fish to a foamed or dried well partially full of fish, refill with brine, add no more than 15 tons of fish and freeze this fish before adding any more. (Page IV-17)

PACKING

- Pump out only enough RSW to allow the addition of fish and installation of the rack. (Page IV-20)

- Add three to four brailers of fish after a well is filled to the "tails up" condition when a normal unloading is expected. Add only two brailers if fish will be floated off. (Page IV-20)

- In wells containing only large (over 50-pound) fish, add two brailers of fish after tails up. (Page IV-20)

BRINING

- As soon as the temperature of the RSW drops to 29°F, pump it off and add the coldest brine available. (Page IV-22)

- If the brine temperature rises above 30°F, replace some of it with colder brine. (Page IV-14)

- Chill brine to 10°F as rapidly as possible. (Pages V-5, V-11)

- Keep the brine temperature 8°F above its freezing point (as indicated by a hydrometer). (Page IV-5)

DRYING

- Dry wells as soon as the brine temperature reaches 10°F. (Page IV-28)

- Insulate the hatch area in dried wells. (Page IV-29)

UNLOADING

- If possible, unload without rebrining. (Page IV-36)

- If rebrining is necessary, remove the top layer of fish beforehand and rebrine for at most 24 hours. (Page IV-35)

- Maintain a temperature of 13°F or lower in rebrined wells. (Page IV-35)

HANDLING FISH FROM LONG SETS

Dead fish held in tropical sea water for over six hours must be chilled and frozen without delay to stop the formation of histamine and honeycomb and to limit other quality changes.

A common cause for prolonged holding in the net is large (over 100 tons) set size. Thus, when it is most crucial to freeze fish quickly, the heat load is increased significantly. The following procedures should be applied to wells containing fish with potential histamine or honeycomb problems.

- Stow 5 to 10 tons less fish than normal in these wells; after this fish is frozen and chilled to 10°F, top off the well with fish. (Page IV-17)

- Connect wells to a separate suction header and apply all available compressors until the temperature in the wells drops to 10°F. (Pages III-5, III-8)

- Brine or foam as soon as the RSW drops to 29°F. (Page IV-22)

- If cold RSW is not available for initial chilling, stow directly into cold brine. (Fish held in the net less than six hours can be stowed in sea water and chilled at a slower rate, while refrigeration is focused on wells with potential histamine or honeycomb problems.) (Pages IV-14, V-5)

- Prevent the brine temperature from rising above 30°F by (1) replacing some of the "warm" brine with colder brine, or (2) adjusting the butterfly valves in the transfer lines so the brine circulator systems of a cold well and the hot well are interconnected. (Page IV-14)

APPENDICES

APPENDIX A
FUNDAMENTALS OF REFRIGERATION

HEAT

A refrigeration system can only remove heat, not "add" cold. Heat is a form of energy and can only transfer from one substance to another. The amount of heat is measured in British Thermal Units (BTU). One BTU raises the temperature of one pound of water by 1°F. The metric equivalent is one kilogram-calorie, the amount of heat required to raise the temperature of 1 kilogram of water 1°C. Conversion factors are given in Table A-1. The quantity of heat in a substance depends on (1) the temperature of the substance, (2) its weight, and (3) its thermal characteristics (specific heat).

TEMPERATURE

Temperature, or sensible heat (the relative "hotness" or "coldness" of a substance) is normally measured with the Fahrenheit scale. Methods for converting between Fahrenheit and centigrade (Celsius) temperature scales are provided in Figure A-1.

SPECIFIC HEAT

The specific heat of a substance is the amount of heat necessary to raise one pound of a substance 1°F. For example, water has a specific heat of 1.0 BTU per pound (by definition) while iron has a specific heat of only 0.12 BTU per pound. Therefore, approximately eight times the amount of heat added to a pound of iron must be applied to a pound of water to produce the same temperature increase. The amount of heat required to

Table A-1. **Conversion Table**

UNITS	TIMES	EQUALS
BRITISH THERMAL UNITS (BTU)	0.252	KILOGRAM-CALORIES
BTU/LB	0.556	KILOCALORIE/KILOGRAM
BTU/HOUR	0.293	WATTS
CUBIC FEET	7.480	GALLONS
CUBIC FEET	0.028	CUBIC METERS
FEET	0.305	METERS
GALLONS	3.785	LITERS
GALLONS/MINUTE	0.063	LITERS/SECOND
HORSEPOWER	2,545	BTU/HOUR
HORSEPOWER	0.746	KILOWATTS
INCHES	2.54	CENTIMETERS
POUNDS	0.454	KILOGRAMS
TONS (SHORT)	2,000	POUNDS
TONS (SHORT)	0.909	METRIC TONS
TONS (LONG)	2,240	POUNDS
TONS OF REFRIGERATION	3.517	KILOWATTS

A. Conversion Formulas

$$F = (\frac{9}{5} \times C) + 32$$

$$C = \frac{5}{9} \times (F - 32)$$

Example for -2°C

$$F = (\frac{9}{5} \times -2) + 32$$

$$F = \frac{-18}{5} + 32$$

F = 28.4°F (fp of Sea Water)

Example for 14°F

$$C = \frac{5}{9} \times (14 - 32)$$

$$C = \frac{5}{9} \times -18$$

C = -10°C

B. Conversion Scale

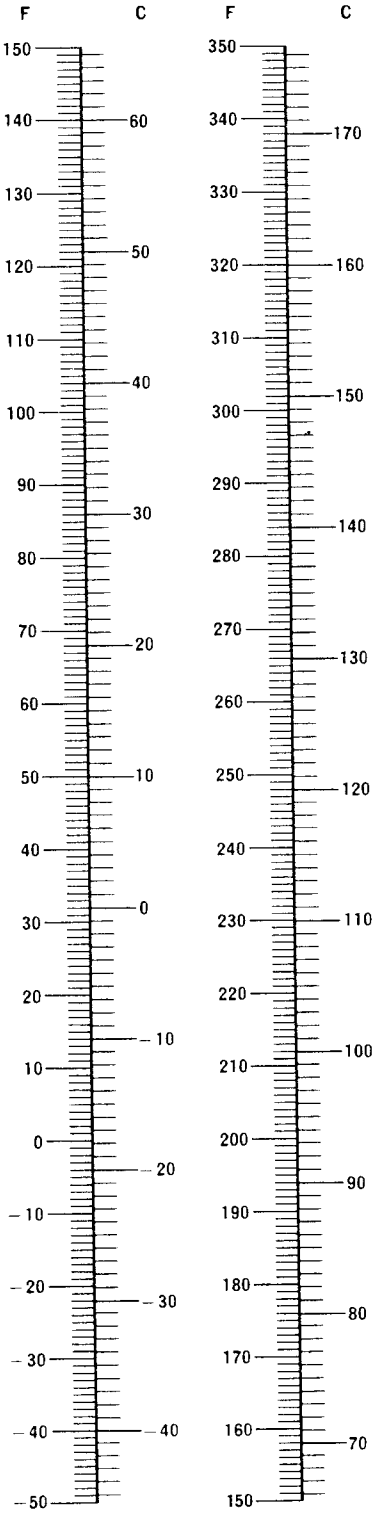

Figure A-1. **Temperature Conversion Formulas and Scale**

produce a given temperature change is calculated by multiplying weight times specific heat times the degrees of temperature change. The specific heats of common foods are less than 1.0 BTU/lb; these heats vary above and below their freezing points. The specific heat of tuna above its freezing point is 0.76 BTU/lb and below freezing is 0.41 BTU/lb.

LATENT HEAT

A second type of heat--latent heat--is that which is added or removed during the phase change of a substance (freezing or boiling). During a phase change the temperature remains constant until all the substance has changed form (solid, liquid, gas). The latent heat of fusion is the heat involved in the change from a solid to a liquid (or a liquid to a solid). The latent heat of vaporization is the heat involved in the change from a liquid to a gas (or a gas to a liquid).

The latent heat of fusion for water is 144 BTU/lb and the latent heat of vaporization is 970 BTU/lb. Thus, one pound of ice at 32°F absorbs 144 BTU of heat while changing into one pound of water at 32°F, and one ton of ice absorbs 288,000 BTU (2,000 x 144) while melting.

A "ton of refrigeration" is defined as the amount of refrigeration produced by one ton of ice melting in 24 hours. A refrigeration system with a one-ton capacity will absorb 288,000 BTU in 24 hours, 12,000 BTU per hour (288,000/24) and 200 BTU per minute (1,200/60).

Tuna flesh is composed of about 70 percent water and its latent heat of fusion is 101 BTU/lb (0.7x144). The amount of heat that must be removed from a ton of tuna (internal

temperature of 90°F) to freeze and store it at 10°F can be calculated (Table A-2). Figure A-2 shows the heat removed during different phases of on-board storage. Almost twice as much heat is removed during freezing than during temperature reduction. About 1.1 tons of refrigeration (311,000/288,000) must be applied to a ton of tuna to freeze it and lower its temperature to 10°F. The line that shows fish temperatures in Figure A-2 is similar to graphs of tuna temperature during normal handling (Figures 4-2 and 4-3).

PRESSURE

A tuna vessel refrigeration system contains ammonia (primary refrigerant) in two phases (liquid and vapor) at various temperatures and pressures. When the pressure of ammonia in the system is greater than atmospheric pressure, it is measured in pounds per square inch (PSI). The pressure at a particular point in a refrigeration system is measured by a pressure gauge, and the indicated pressure labeled PSIG.

Gauge pressure shows the difference between the pressure in the system and atmospheric pressure (about 14.7 PSI at sea level). The total or absolute pressure (PSIA) is found by adding 14.7 to the gauge pressure. Thus, at sea level atmospheric pressure is 0 PSIG and 14.7 PSIA.

The gauges used on tuna boats are called compound gauges because they indicate pressure above and below atmospheric pressure. If the pressure in the system is less than atmospheric, it is usually measured in "inches of vacuum." A 30-inch vacuum is a perfect vacuum at sea level--in this case the barometric pressure is equal to the pressure exerted by a column of mercury 30 inches high. A 10-inch vacuum is 10 inches below

Table A-2. **Heat Removed from One Ton of Tuna During Chilling and Freezing.**

Type of Heat	Temperature Range (°F)	Temperature Change (°F)		Specific or Latent Heat (BTU/LB)		Weight (LB)		Amount of Heat (BTU)	Percent of Heat Load
Sensible Heat above Freezing	90-28	62	x	.76	x	2,000	=	94,240	30
Latent Heat of Fusion	Constant			101	x	2,000	=	202,000	65
Sensible Heat below Freezing	28-10	18	x	.41	x	2,000	=	14,760	5
Total		80						311,000	

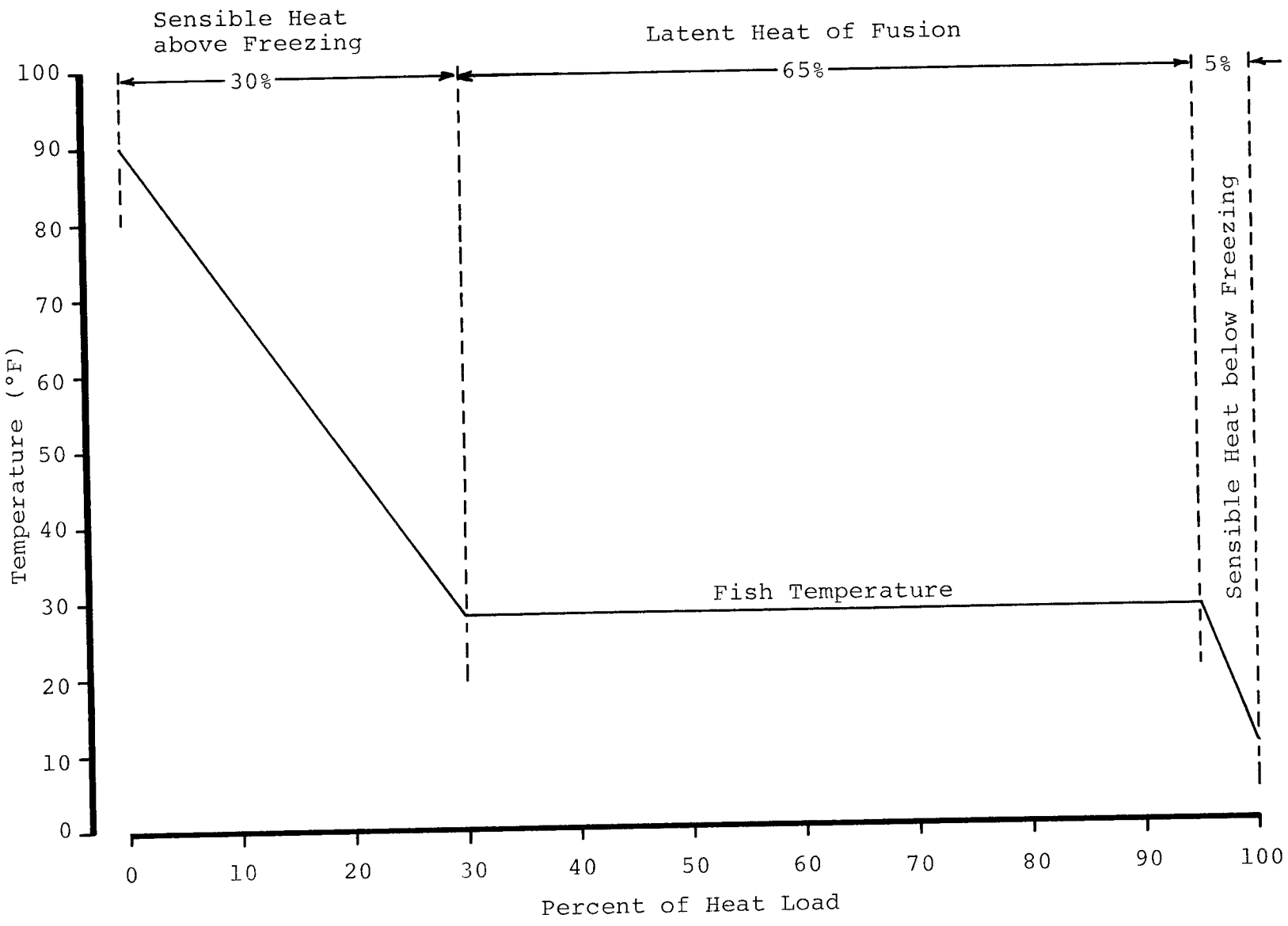

Figure A-2. **Heat Removed from Tuna During Chilling and Freezing**

atmospheric pressure, or a one-third perfect vacuum. This is called a gauge pressure of 10 inches of vacuum, in spite of the contradiction of the terms pressure and vacuum. For each inch of vacuum, the absolute pressure is about 0.5 PSI (14.7/30) below atmospheric pressure. In a 10-inch vacuum the absolute pressure is 9.7 PSIA (14.7-(10x0.5)).

INTERACTION OF PRESSURE AND TEMPERATURE

The temperature at which a liquid changes to a gas (the boiling or evaporating temperature) is directly dependent on the pressure. The greater the pressure, the higher the boiling point. This same relationship is true for the condensation temperature (the temperature at which a substance changes from a vapor to a liquid).

A substance can be made to evaporate/boil (or condense) at a wide range of temperatures by adjusting the pressure. The temperature of an evaporating substance does not change until all the liquid is converted to a vapor. The substance will absorb a quantity of heat equal to its latent heat of vaporization for each pound of vapor given off. This heat must be supplied by something else that is consequently cooled. This effect is demonstrated when rubbing alcohol is wiped on a person's hand. The alcohol absorbs heat from the skin and evaporates (boils away), cooling the skin. Boiling water absorbs heat from a flame and "cools" the flame, although this cooling is not readily observed.

A refrigeration system controls the evaporating pressure of the primary refrigerant and consequently the temperature in the system through adjustment of the pressure in the system.

PROPERTIES OF AMMONIA

Ammonia (R-717) is the primary refrigerant used on United States tuna seiners because (1) the range of its evaporating temperatures at easily produced pressures is well-suited to the freezing and storing of tuna, (2) it is relatively inexpensive, and (3) it is readily available. The relationship between pressure and evaporating temperature (or condensation temperature) for ammonia is shown in Figure A-3 and some important characteristics of ammonia are provided in Table A-3. Liquid ammonia evaporates at $-28^{o}F$ at atmospheric pressure, $-1^{o}F$ at 15 PSIG, and $29^{o}F$ at 43.8 PSIG.

Ammonia is also a potentially dangerous substance. Appendix B provides information regarding the safe use of ammonia and first aid in the event of an accident.

SIMPLIFIED REFRIGERATION SYSTEM

Figure A-4 shows a simple arrangement for cooling with liquid ammonia. When the valve on the tank is opened, liquid ammonia under pressure enters the coil. Some of the liquid ammonia instantly evaporates and forms flash gas at the valve. The heat required to form this gas comes from the liquid ammonia, thus chilling the remaining liquid to $-28^{o}F$. This liquid then passes along the coil absorbing heat, forming vapor (evaporating), and, in the process, chilling the coil to nearly $-28^{o}F$. The coil in turn absorbs heat and chills the surrounding air. This coil is called an evaporator coil or an evaporator and the valve is called an expansion valve.

COMPLETE REFRIGERATION SYSTEM

The above "system" will produce refrigeration as long as liquid ammonia is present in the cylinder. For safe and

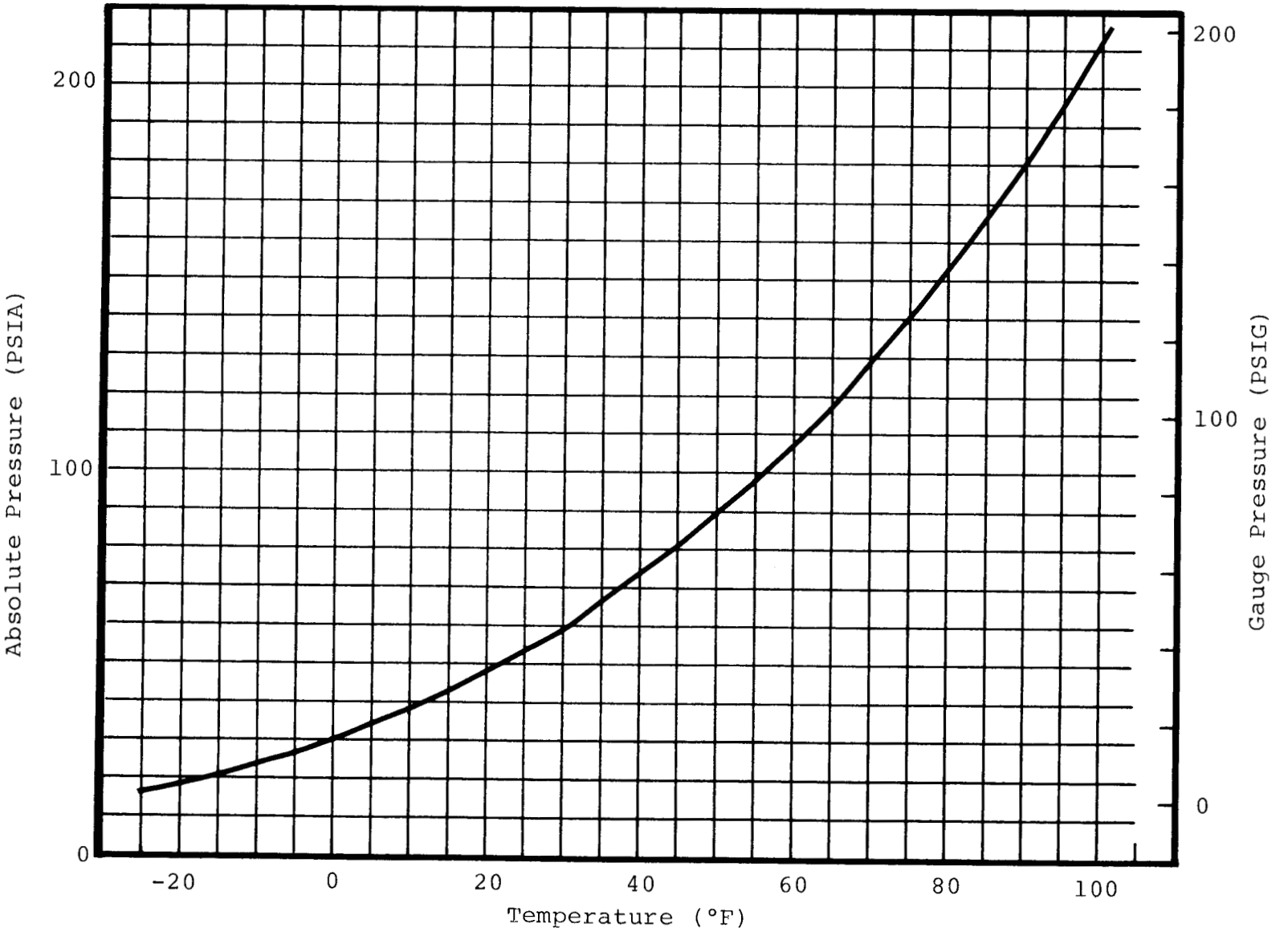

Figure A-3. **Relationship Between Pressure and Evaporating Temperature of Ammonia**

Table A-3. **Thermodynamic Properties of Ammonia**

Temp. – °F	Pressure – Lb. per Sq. In.		Volume – Cu. Ft. per Lb.		Density – Lb. per Cu. Ft.		Enthalpy – Btu per Lb.			Entropy – Btu per (Lb.) (°R)		Temp. – °F
t	Absolute P	Gage p	Liquid v_f	Vapor v_g	Liquid $1/v_f$	Vapor $1/v_g$	Liquid h_f	Latent h_{fg}	Vapor h_g	Liquid s_f	Vapor s_g	t
-60	5.55	18.6*	0.02278	44.73	43.91	0.02235	-21.2	610.8	589.6	-0.0517	1.4769	-60
-59	5.74	18.2*		43.37		.02306	-20.1	610.1	590.0	- .0490	1.4741	-59
-58	5.93	17.8*		42.05		.02378	-19.1	609.5	590.4	- .0464	1.4713	-58
-57	6.13	17.4*		40.79		.02452	-18.0	608.8	590.8	- .0438	1.4686	-57
-56	6.33	17.0*		39.56		.02528	-17.0	608.2	591.2	- .0412	1.4658	-56
-55	6.54	16.6*	0.02288	38.38	43.70	0.02605	-15.9	607.5	591.6	-0.0386	1.4631	-55
-54	6.75	16.2*		37.24		.02685	-14.8	606.9	592.1	- .0360	1.4604	-54
-53	6.97	15.7*		36.15		.02766	-13.8	606.2	592.4	- .0334	1.4577	-53
-52	7.20	15.3*		35.09		.02850	-12.7	605.6	592.9	- .0307	1.4551	-52
-51	7.43	14.8*		34.06		.02936	-11.7	604.9	593.2	- .0281	1.4524	-51
-50	7.67	14.3*	0.02299	33.08	43.49	0.03023	-10.6	604.3	593.7	-0.0256	1.4497	-50
-49	7.91	13.8*		32.12		.03113	- 9.6	603.6	594.0	- .0230	1.4471	-49
-48	8.16	13.3*		31.20		.03205	- 8.5	602.9	594.4	- .0204	1.4445	-48
-47	8.42	12.8*		30.31		.03299	- 7.4	602.3	594.9	- .0179	1.4419	-47
-46	8.68	12.2*		29.45		0.03395	- 6.4	601.6	595.2	-0.0153	1.4393	-46
-45	8.95	11.7*	0.02310	28.62	43.28	0.03494	- 5.3	600.9	595.6	-0.0127	1.4368	-45
-44	9.23	11.1*		27.82		.03595	- 4.3	600.3	596.0	- .0102	1.4342	-44
-43	9.51	10.6*		27.04		.03698	- 3.2	599.6	596.4	- .0076	1.4317	-43
-42	9.81	10.0*		26.29		.03804	- 2.1	598.9	596.8	- .0051	1.4292	-42
-41	10.10	9.3*		25.56		.03912	- 1.1	598.3	597.2	- .0025	1.4267	-41
-40	10.41	8.7*	0.02322	24.86	43.07	0.04022	0.0	597.6	597.6	0.0000	1.4242	-40
-39	10.72	8.1*		24.18		.04135	1.1	596.9	598.0	.0025	1.4217	-39
-38	11.04	7.4*		23.53		.04251	2.1	596.2	598.3	.0051	1.4193	-38
-37	11.37	6.8*		22.89		.04369	3.2	595.5	598.7	.0076	1.4169	-37
-36	11.71	6.1*		22.27		.04489	4.3	594.8	599.1	.0101	1.4144	-36
-35	12.05	5.4*	0.02333	21.68	42.86	0.04613	5.3	594.2	599.5	0.0126	1.4120	-35
-34	12.41	4.7*		21.10		.04739	6.4	593.5	599.9	.0151	1.4096	-34
-33	12.77	3.9*		20.54		.04868	7.4	592.8	600.2	.0176	1.4072	-33
-32	13.14	3.2*		20.00		.04999	8.5	592.1	600.6	.0201	1.4048	-32
-31	13.52	2.4*		19.48		.05134	9.6	591.4	601.0	.0226	1.4025	-31
-30	13.90	1.6*	0.02345	18.97	42.65	0.05271	10.7	590.7	601.4	0.0250	1.4001	-30
-29	14.30	0.8*		18.48		.05411	11.7	590.0	601.7	.0275	1.3978	-29
-28	14.71	0.0		18.00		.05555	12.8	589.3	602.1	.0300	1.3955	-28
-27	15.12	0.4		17.54		.05701	13.9	588.6	602.5	.0325	1.3932	-27
-26	15.55	0.8		17.09		.05850	14.9	587.9	602.8	.0350	1.3909	-26
-25	15.98	1.3	0.02357	16.66	42.44	0.06003	16.0	587.2	603.2	0.0374	1.3886	-25
-24	16.42	1.7		16.24		.06158	17.1	586.5	603.6	.0399	1.3863	-24
-23	16.88	2.2		15.83		.06317	18.1	585.8	603.9	.0423	1.3840	-23
-22	17.34	2.6		15.43		.06479	19.2	585.1	604.3	.0448	1.3818	-22
-21	17.81	3.1		15.05		.06644	20.3	584.3	604.6	.0472	1.3796	-21
-20	18.30	3.6	0.02369	14.68	42.22	0.06813	21.4	583.6	605.0	0.0497	1.3774	-20
-19	18.79	4.1		14.32		.06985	22.4	582.9	605.3	.0521	1.3752	-19
-18	19.30	4.6		13.97		.07161	23.5	582.2	605.7	.0545	1.3729	-18
-17	19.81	5.1		13.62		.07340	24.6	581.5	606.1	.0570	1.3708	-17
-16	20.34	5.6		13.29		.07522	25.6	580.8	606.4	.0594	1.3686	-16
-15	20.88	6.2	0.02381	12.97	42.00	0.07709	26.7	580.0	606.7	0.0618	1.3664	-15
-14	21.43	6.7		12.66		.07898	27.8	579.3	607.1	.0642	1.3643	-14
-13	21.99	7.3		12.36		.08092	28.9	578.6	607.5	.0666	1.3621	-13
-12	22.56	7.9		12.06		.08289	30.0	577.8	607.8	.0690	1.3600	-12
-11	23.15	8.5		11.78		.08490	31.0	577.1	608.1	.0714	1.3579	-11
-10	23.74	9.0	0.02393	11.50	41.78	0.08695	32.1	576.4	608.5	0.0738	1.3558	-10
- 9	24.35	9.7		11.23		.08904	33.2	575.6	608.8	.0762	1.3537	- 9
- 8	24.97	10.3		10.97		.09117	34.3	574.9	609.2	.0786	1.3516	- 8
- 7	25.61	10.9		10.71		.09334	35.4	574.1	609.5	.0809	1.3495	- 7
- 6	26.26	11.6		10.47		.09555	36.4	573.4	609.8	.0833	1.3474	- 6
- 5	26.92	12.2	0.02406	10.23	41.56	0.09780	37.5	572.6	610.1	0.0857	1.3454	- 5
- 4	27.59	12.9		9.991		.1001	38.6	571.9	610.5	.0880	1.3433	- 4
- 3	28.28	13.6		9.763		.1024	39.7	571.1	610.8	.0904	1.3413	- 3
- 2	28.98	14.3		9.541		.1048	40.7	570.4	611.1	.0928	1.3393	- 2
- 1	29.69	15.0		9.326		.1072	41.8	569.6	611.4	.0951	1.3372	- 1

* Inches of mercury below one atmosphere

Table A-3. **Thermodynamic Properties of Ammonia** (continued)

Temp. – °F	Pressure – Lb. per Sq. In.		Volume – Cu. Ft. per Lb.		Density – Lb. per Cu. Ft.		Enthalpy – Btu per Lb.			Entropy – Btu per (Lb.) (°R)		Temp. – °F
t	Absolute P	Gage p	Liquid v_f	Vapor v_g	Liquid $1/v_f$	Vapor $1/v_g$	Liquid h_f	Latent h_{fg}	Vapor h_g	Liquid s_f	Vapor s_g	t
0	30.42	15.7	0.02419	9.116	41.34	0.1097	42.9	568.9	611.8	0.0975	1.3352	0
1	31.16	16.5		8.912		.1122	44.0	568.1	612.1	.0998	1.3332	1
2	31.92	17.2		8.714		.1148	45.1	567.3	612.4	.1022	1.3312	2
3	32.69	18.0		8.521		.1174	46.2	566.5	612.7	.1045	1.3292	3
4	33.47	18.8		8.333		.1200	47.2	565.8	613.0	.1069	1.3273	4
5	34.27	19.6	0.02432	8.150	41.11	0.1227	48.3	565.0	613.3	0.1092	1.3253	5
6	35.09	20.4		7.971		.1254	49.4	564.2	613.6	.1115	1.3234	6
7	35.92	21.2		7.798		.1282	50.5	563.4	613.9	.1138	1.3214	7
8	36.77	22.1		7.629		.1311	51.6	562.7	614.3	.1162	1.3195	8
9	37.63	22.9		7.464		.1340	52.7	561.9	614.6	.1185	1.3176	9
10	38.51	23.8	0.02446	7.304	40.89	0.1369	53.8	561.1	614.9	0.1208	1.3157	10
11	39.40	24.7		7.148		.1399	54.9	560.3	615.2	.1231	1.3137	11
12	40.31	25.6		6.996		.1429	56.0	559.5	615.5	.1254	1.3118	12
13	41.24	26.5		6.847		.1460	57.1	558.7	615.8	.1277	1.3099	13
14	42.18	27.5		6.703		.1492	58.2	557.9	616.1	.1300	1.3081	14
15	43.14	28.4	0.02460	6.562	40.66	0.1524	59.2	557.1	616.3	0.1323	1.3062	15
16	44.12	29.4		6.425		.1556	60.3	556.3	616.6	.1346	1.3043	16
17	45.12	30.4		6.291		.1590	61.4	555.5	616.9	.1369	1.3025	17
18	46.13	31.4		6.161		.1623	62.5	554.7	617.2	.1392	1.3006	18
19	47.16	32.5		6.034		0.1657	63.6	553.9	617.5	0.1415	1.2988	19
20	48.21	33.5	0.02474	5.910	40.43	0.1692	64.7	553.1	617.8	0.1437	1.2969	20
21	49.28	34.6		5.789		.1728	65.8	552.2	618.0	.1460	1.2951	21
22	50.36	35.7		5.671		.1763	66.9	551.4	618.3	.1483	1.2933	22
23	51.47	36.8		5.556		.1800	68.0	550.6	618.6	.1505	1.2915	23
24	52.59	37.9		5.443		.1837	69.1	549.8	618.9	.1528	1.2897	24
25	53.73	39.0	0.02488	5.334	40.20	0.1875	70.2	548.9	619.1	0.1551	1.2879	25
26	54.90	40.2		5.227		.1913	71.3	548.1	619.4	.1573	1.2861	26
27	56.08	41.4		5.123		.1952	72.4	547.3	619.7	.1596	1.2843	27
28	57.28	42.6		5.021		.1992	73.5	546.4	619.9	.1618	1.2825	28
29	58.50	43.8		4.922		.2032	74.6	545.6	620.2	.1641	1.2808	29
30	59.74	45.0	0.02503	4.825	39.96	0.2073	75.7	544.8	620.5	0.1663	1.2790	30
31	61.00	46.3		4.730		.2114	76.8	543.9	620.7	.1686	1.2773	31
32	62.29	47.6		4.637		.2156	77.9	543.1	621.0	.1708	1.2755	32
33	63.59	48.9		4.547		.2199	79.0	542.2	621.2	.1730	1.2738	33
34	64.91	50.2		4.459		.2243	80.1	541.4	621.5	.1753	1.2721	34
35	66.26	51.6	0.02518	4.373	39.72	0.2287	81.2	540.5	621.7	0.1775	1.2704	35
36	67.63	52.9		4.289		.2332	82.3	539.7	622.0	.1797	1.2686	36
37	69.02	54.3		4.207		.2377	83.4	538.8	622.2	.1819	1.2669	37
38	70.43	55.7		4.126		.2423	84.6	537.9	622.5	.1841	1.2652	38
39	71.87	57.2		4.048		.2470	85.7	537.0	622.7	.1863	1.2635	39
40	73.32	58.6	0.02533	3.971	39.49	0.2518	86.8	536.2	623.0	0.1885	1.2618	40
41	74.80	60.1		3.897		.2566	87.9	535.3	623.2	.1908	1.2602	41
42	76.31	61.6		3.823		.2616	89.0	534.4	623.4	.1930	1.2585	42
43	77.83	63.1		3.752		.2665	90.1	533.6	623.7	.1952	1.2568	43
44	79.38	64.7		3.682		.2716	91.2	532.7	623.9	.1974	1.2552	44
45	80.96	66.3	0.02548	3.614	39.24	0.2767	92.3	531.8	624.1	0.1996	1.2535	45
46	82.55	67.9		3.547		.2819	93.5	530.9	624.4	.2018	1.2519	46
47	84.18	69.5		3.481		.2872	94.6	530.0	624.6	.2040	1.2502	47
48	85.82	71.1		3.418		.2926	95.7	529.1	624.8	.2062	1.2486	48
49	87.49	72.8		3.355		.2981	96.8	528.2	625.0	.2083	1.2469	49
50	89.19	74.5	0.02564	3.294	39.00	0.3036	97.9	527.3	625.2	0.2105	1.2453	50
51	90.91	76.2		3.234		.3092	99.1	526.4	625.5	.2127	1.2437	51
52	92.66	78.0		3.176		.3149	100.2	525.5	625.7	.2149	1.2421	52
53	94.43	79.7		3.119		.3207	101.3	524.6	625.9	.2171	1.2405	53
54	96.23	81.5		3.063		.3265	102.4	523.7	626.1	.2192	1.2389	54
55	98.06	83.4	0.02581	3.008	38.75	0.3325	103.5	522.8	626.3	0.2214	1.2373	55
56	99.91	85.2		2.954		.3385	104.7	521.8	626.5	.2236	1.2357	56
57	101.8	87.1		2.902		.3446	105.8	520.9	626.7	.2257	1.2341	57
58	103.7	89.0		2.851		.3508	106.9	520.0	626.9	.2279	1.2325	58
59	105.6	90.9		2.800		.3571	108.1	519.0	627.1	.2301	1.2310	59

Table A-3. **Thermodynamic Properties of Ammonia** (continued)

Temp. – °F	Pressure – Lb. per Sq. In.		Volume – Cu. Ft. per Lb.		Density – Lb. per Cu. Ft.		Enthalpy – Btu per Lb.			Entropy – Btu per (Lb.) (°R)		Temp. – °F
t	Absolute P	Gage p	Liquid v_f	Vapor v_g	Liquid $1/v_f$	Vapor $1/v_g$	Liquid h_f	Latent h_{fg}	Vapor h_g	Liquid s_f	Vapor s_g	t
60	107.6	92.9	0.02597	2.751	38.50	0.3635	109.2	518.1	627.3	0.2322	1.2294	60
61	109.6	94.9		2.703		.3700	110.3	517.2	627.5	.2344	1.2278	61
62	111.6	96.9		2.656		.3765	111.5	516.2	627.7	.2365	1.2262	62
63	113.6	98.9		2.610		.3832	112.6	515.3	627.9	.2387	1.2247	63
64	115.7	101.0		2.565		.3899	113.7	514.3	628.0	.2408	1.2231	64
65	117.8	103.1	0.02614	2.520	38.25	0.3968	114.8	513.4	628.2	0.2430	1.2216	65
66	120.0	105.3		2.477		.4037	116.0	512.4	628.4	.2451	1.2201	66
67	122.1	107.4		2.435		.4108	117.1	511.5	628.6	.2473	1.2186	67
68	124.3	109.6		2.393		.4179	118.3	510.5	628.8	.2494	1.2170	68
69	126.5	111.8		2.352		.4251	119.4	509.5	628.9	.2515	1.2155	69
70	128.8	114.1	0.02632	2.312	38.00	0.4325	120.5	508.6	629.1	0.2537	1.2140	70
71	131.1	116.4		2.273		.4399	121.7	507.6	629.3	.2558	1.2125	71
72	133.4	118.7		2.235		.4474	122.8	506.6	629.4	.2579	1.2110	72
73	135.7	121.0		2.197		.4551	124.0	505.6	629.6	.2601	1.2095	73
74	138.1	123.4		2.161		.4628	125.1	504.7	629.8	.2622	1.2080	74
75	140.5	125.8	0.02650	2.125	37.74	0.4707	126.2	503.7	629.9	0.2643	1.2065	75
76	143.0	128.3		2.089		.4786	127.4	502.7	630.1	.2664	1.2050	76
77	145.4	130.7		2.055		.4867	128.5	501.7	630.2	.2685	1.2035	77
78	147.9	133.2		2.021		.4949	129.7	500.7	630.4	.2706	1.2020	78
79	150.5	135.8		1.988		.5031	130.8	499.7	630.5	.2728	1.2006	79
80	153.0	138.3	0.02668	1.955	37.48	0.5115	132.0	498.7	630.7	0.2749	1.1991	80
81	155.6	140.9		1.923		.5200	133.1	497.7	630.8	.2769	1.1976	81
82	158.3	143.6		1.892		.5287	134.3	496.7	631.0	.2791	1.1962	82
83	161.0	146.3		1.861		.5374	135.4	495.7	631.1	.2812	1.1947	83
84	163.7	149.0		1.831		0.5462	136.6	494.7	631.3	0.2833	1.1933	84
85	166.4	151.7	0.02687	1.801	37.21	0.5552	137.8	493.6	631.4	0.2854	1.1918	85
86	169.2	154.5		1.772		0.5643	138.9	492.6	631.5	.2875	1.1904	86
87	172.0	157.3		1.744		0.5735	140.1	491.6	631.7	.2895	1.1889	87
88	174.8	160.1		1.716		0.5828	141.2	490.6	631.8	.2917	1.1875	88
89	177.7	163.0		1.688		0.5923	142.4	489.5	631.9	.2937	1.1860	89
90	180.6	165.9	0.02707	1.661	36.94	0.6019	143.5	488.5	632.0	0.2958	1.1846	90
91	183.6	168.9		1.635		0.6116	144.7	487.4	632.1	.2979	1.1832	91
92	186.6	171.9		1.609		0.6214	145.8	486.4	632.2	.3000	1.1818	92
93	189.6	174.9		1.584		0.6314	147.0	485.3	632.3	.3021	1.1804	93
94	192.7	178.0		1.559		0.6415	148.2	484.3	632.5	.3041	1.1789	94
95	195.8	181.1	0.02727	1.534	36.67	0.6517	149.4	483.2	632.6	0.3062	1.1775	95
96	198.9	184.2		1.510		0.6620	150.5	482.1	632.6	.3083	1.1761	96
97	202.1	187.4		1.487		0.6725	151.7	481.1	632.8	.3104	1.1747	97
98	205.3	190.6		1.464		0.6832	152.9	480.0	632.9	.3125	1.1733	98
99	208.6	193.9		1.441		0.6939	154.0	478.9	632.9	.3145	1.1719	99
100	211.9	197.2	0.02748	1.419	36.40	0.7048	155.2	477.8	633.0	0.3166	1.1705	100
101	215.2	200.5		1.397		0.7159	156.4	476.7	633.1	.3187	1.1691	101
102	218.6	203.9		1.375		0.7270	157.6	475.6	633.2	.3207	1.1677	102
103	222.0	207.3		1.354		0.7384	158.7	474.6	633.3	.3228	1.1663	103
104	225.4	210.7		1.334		0.7498	159.9	473.5	633.4	.3248	1.1649	104
105	228.9	214.2	0.02769	1.313	36.12	0.7615	161.1	472.3	633.4	0.3269	1.1635	105
106	232.5	217.8		1.293		0.7732	162.3	471.2	633.5	.3289	1.1621	106
107	236.0	221.3		1.274		0.7852	163.5	470.1	633.6	.3310	1.1607	107
108	239.7	225.0		1.254		0.7972	164.6	469.0	633.6	.3330	1.1593	108
109	243.3	228.6		1.235		0.8095	165.8	467.9	633.7	.3351	1.1580	109
110	247.0	232.3	0.02790	1.217	35.84	0.8219	167.0	466.7	633.7	0.3372	1.1566	110
111	250.8	236.1		1.198		0.8344	168.2	465.6	633.8	.3392	1.1552	111
112	254.5	239.8		1.180		0.8471	169.4	464.4	633.8	.3413	1.1538	112
113	258.4	243.7		1.163		0.8600	170.6	463.3	633.9	.3433	1.1524	113
114	262.2	247.5		1.145		0.8730	171.8	462.1	633.9	.3453	1.1510	114
115	266.2	251.5	0.02813	1.128	35.55	0.8862	173.0	460.9	633.9	0.3474	1.1497	115
116	270.1	255.4		1.112		0.8996	174.2	459.8	634.0	.3495	1.1483	116
117	274.1	259.4		1.095		0.9132	175.4	458.6	634.0	.3515	1.1469	117
118	278.2	263.5		1.079		0.9269	176.6	457.4	634.0	.3535	1.1455	118
119	282.3	267.6		1.063		0.9408	177.8	456.2	634.0	.3556	1.1441	119
120	286.4	271.7	0.02836	1.047	35.26	0.9549	179.0	455.0	634.0	0.3576	1.1427	120

Source: Vilter Manufacturing Corp., Milwaukee, Wisconsin

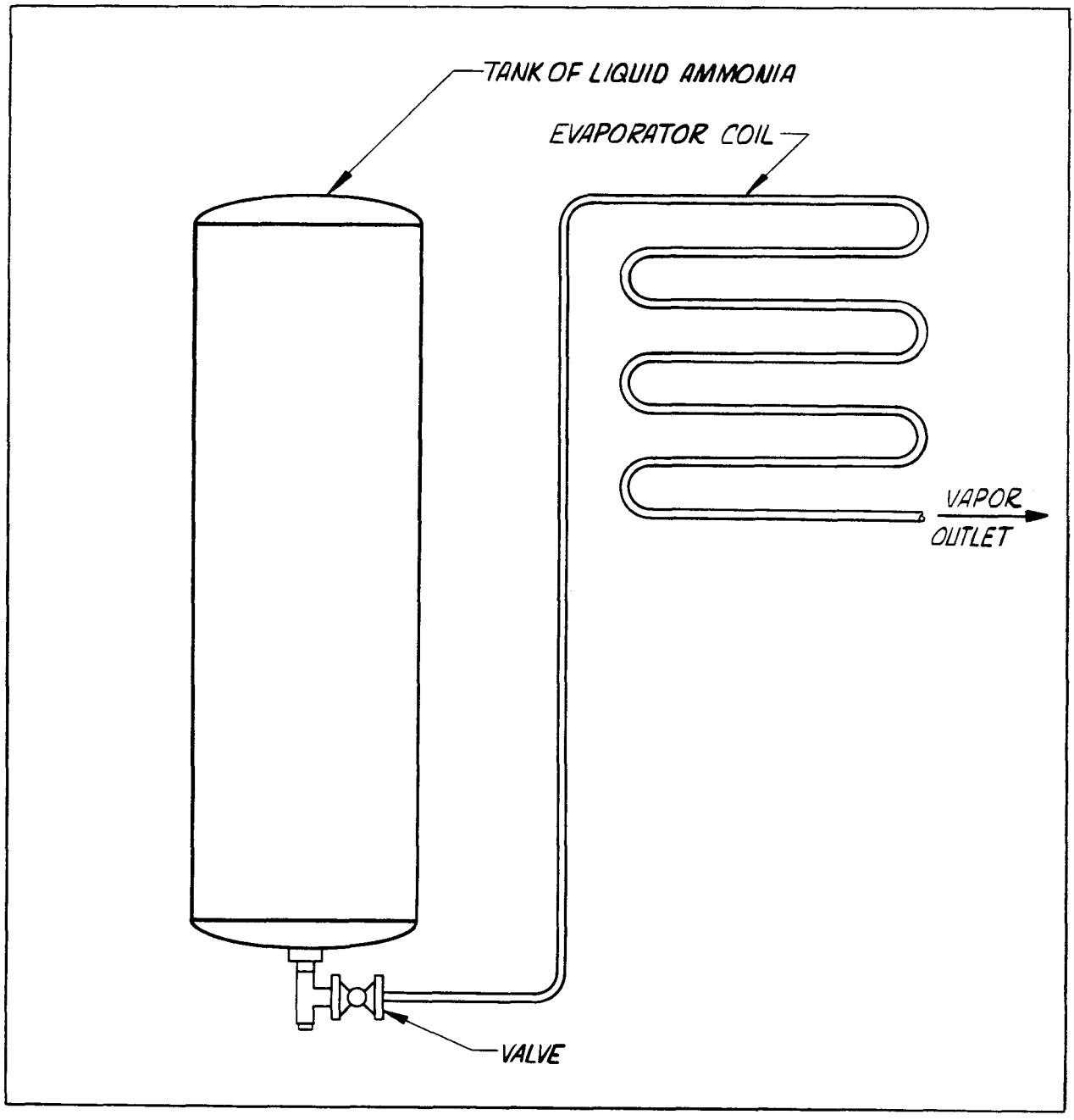

Figure A-4. **Simplified Ammonia Refrigeration System**

economical refrigeration, ammonia should not be lost to the atmosphere. By adding a condenser and compressor to the system, the ammonia vapor can be reclaimed by turning the vapor back into a liquid and returning it to a receiver. Figure A-5 is a schematic diagram of such a system showing the arrangement of the components, the direction of ammonia flow, and the piping.

NORMAL OPERATING CONDITIONS ON A TUNA SEINER

During normal operation on a tuna seiner, liquid ammonia at 180 PSIG pressure flows through the expansion valve. Its pressure drops to 15 PSIG as it enters the evaporator coil. Some of the liquid flashes into a vapor and cools the rest of the liquid to -1°F. The mixture of liquid and vapor moves along the coil absorbing heat until all the liquid is evaporated. Up to this point, the temperature of the vapor cannot rise above the boiling point and the vapor is called a "saturated" vapor. When all the liquid has evaporated, the vapor temperature can rise, producing a "superheated" vapor. The difference between the temperature of a superheated vapor and its evaporating temperature at the existing pressure is the amount of "superheat." The superheated vapor discharged from the evaporator coils is estimated to have about 25 degrees of superheat, giving a temperature of 24°F in the above example. There is also a drop in pressure of about 5 to 10 PSIG from the beginning to the end of the coils.

The vapor picks up an additional five degrees of superheat as it passes along the suction line to the compressor. Here the vapor is compressed to 180 PSIG. The mechanical energy used in compression is converted to heat energy, raising the temperature of the vapor to 270°F. The hot, high-pressure vapor then enters the condenser via the discharge line. There, sea water flows

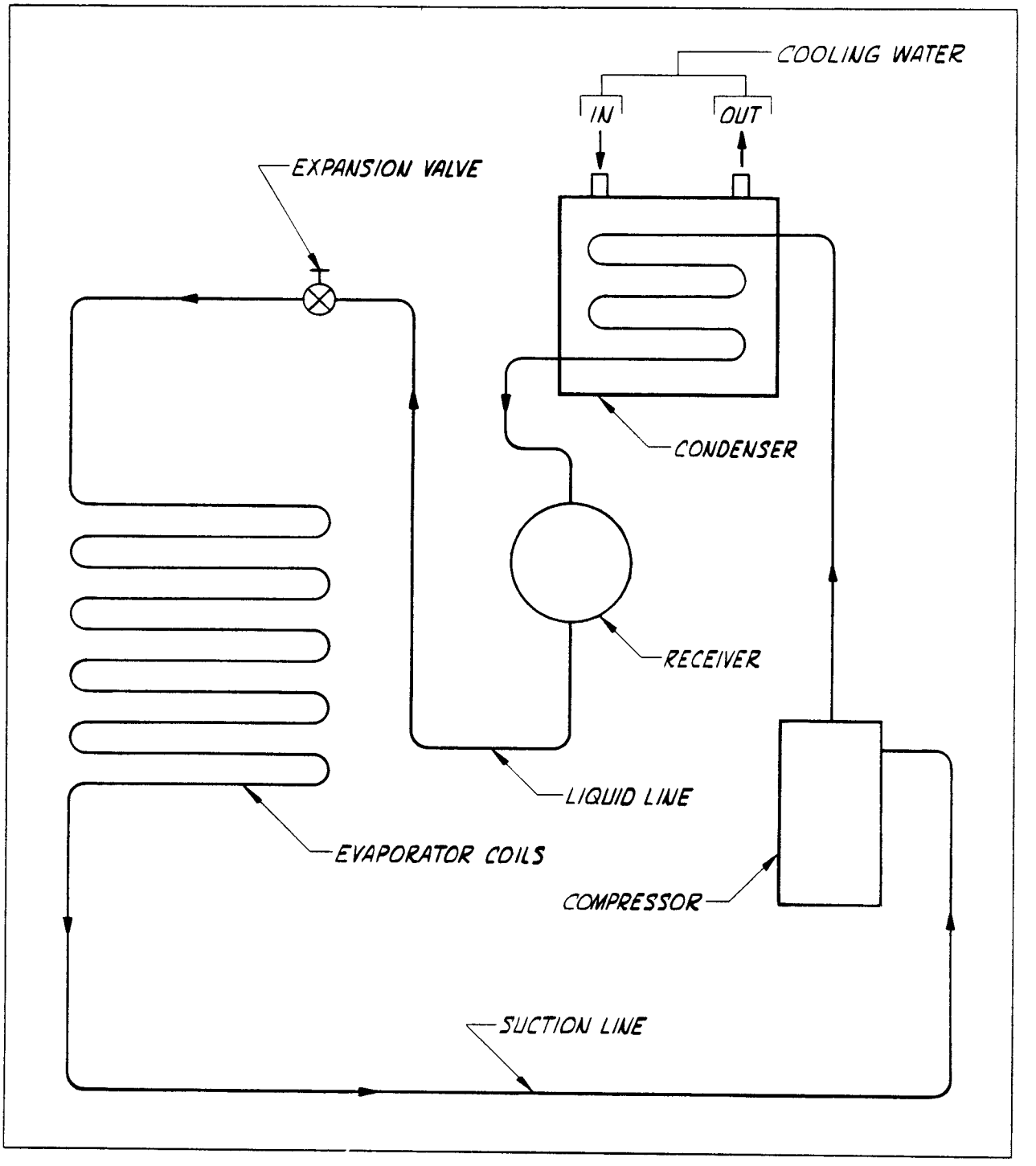

Figure A-5. **Schematic Diagram of a Refrigeration System**

over pipes carrying the vapor and cools the vapor to 95°F (its condensing temperature at 180 PSIG). When the latent heat of vaporization is removed, the vapor condenses into liquid form. The liquid ammonia drains to the receiver and is ready for reuse.

The refrigeration system is conveniently divided into two parts. As ammonia passes through the expansion valve to the evaporator coil and to the compressor intake, the pressure is relatively low. This portion of the system is called the "low side." The remaining components (compressor, condenser, and receiver) and piping make up the "high side" of the system. The high side is important for removal of heat because the compressor adds heat (the heat of compression) to the ammonia vapor elevating its temperature, allowing the sea water flowing through the condenser to cool it, removing both the heat of compression and the heat picked up from the fish wells.

APPENDIX B
AMMONIA SAFETY INFORMATION[3]

WARNING PROPERTIES

Ammonia has a penetrating, intensely pungent, suffocating odor, and is strongly irritant, so that there is little likelihood that anyone will voluntarily remain in a seriously contaminated atmosphere.

FIRE AND EXPLOSION HAZARDS

Ammonia is capable of forming flammable mixtures with air within certain limits (16 to 25 percent by volume). The presence of oil, or a mixture of ammonia with other combustible materials, will increase the fire hazard.

The explosion range of ammonia is broadened by a mixture of oxygen replacing air, and by temperature and pressure higher than atmospheric. Contact of ammonia with certain other chemicals (including mercury, chlorine, iodine, bromine, calcium, silver oxide, or hypochlorite) can form explosive compounds. Mercury instruments employed in ammonia service should never be connected in such a manner as to permit contact of the mercury with liquid or gaseous ammonia.

Due to its narrow range of flammability and high ignition temperature, ammonia does not generally constitute a fire hazard. However, when it is used in process work or stored adjacent to flammable materials, it may become involved in a fire. Where ammonia is involved in fire, water is the best extinguishing medium. Ammonia is soluble in water and spray or fog-type

---

3. Reprinted with revisions by permission of Campbell Industries.

streams are effective in removing the gas from the atmosphere; therefore these are useful in protecting personnel in approaching a leaking valve or a break. The gas leak should be shut off if possible.

HEALTH HAZARDS

Ammonia is not a systemic poison--it affects only tissues directly exposed to it.

Local Effects

Inhalation of high concentrations of ammonia produces violent coughing because of its local action on the respiratory tract. If rapid escape is not possible, severe lung irritation, pulmonary edema, or death may result. Lower concentrations cause eye irritation, laryngitis, or bronchitis. Table B-1 is a list of the effects of various concentrations of ammonia in the air. Swallowing liquid ammonia will result in severe corrosive action on the mouth, throat, and stomach. Exposure to high gas concentrations may cause temporary blindness and severe eye damage. Direct contact with liquid anhydrous ammonia will immediately produce serious burns.

Chronic Toxicity

Chronic irritation to the eyes, nose, and upper respiratory tract may result from repeated exposure to ammonia vapors. A threshold limit value of 100 PPM in air has been set by some agencies as the maximum safe concentration for daily eight-hour exposure.

Table B-1. **Effects of Ammonia in Air**

Vapor Concentration		General Effect	Exposure Period
Percent	PPM[a]		
.0005	50	Odor detectable by most persons.	Prolonged repeated exposure produces no injury.
.01	100	No adverse effect for average worker.	Maximum allowable concentration for eight-hour working exposure.
.04-.07	400-700	Nose and throat irritation. Eye irritation with tearing.	Infrequent short (one hour) exposures ordinarily produce no serious effect.
.2-.3	2,000-3,000	Convulsive coughing. Severe eye irritation.	No permissible exposure. May be fatal after short exposure.
.5-1	5,000-10,000	Respiratory spasm. Rapid asphyxia.	No permissible exposure. Rapidly fatal.

[a]PPM - Parts Per Million

SAFETY EQUIPMENT

Eye Protection

Gas-tight goggles or full-length protection should be worn when handling ammonia where leaks or spills may occur. Water wash and water sprays should be available in areas where ammonia leaks, spills, or splashes may be encountered.

Respiratory Protection

Respiratory protective equipment must be carefully maintained, inspected, cleaned, and sterilized at regular intervals, and always before and after use.

Gas masks should be of a type approved by the U.S. Bureau of Mines. They should be stored where they are easily accessible and where there is no danger of ammonia contaminating the atmosphere.

Self-contained breathing apparatuses that permit the wearer to carry a supply of oxygen or air compressed in the cylinder, or the self-generating type that produce oxygen chemically, allow the best mobility for the wearer. The length of time a self-contained breathing apparatus provides protection varies according to the amount of air, oxygen, or regenerating material carried. Compressed oxygen should not be used where there is danger of contact with flammable liquids or vapors--especially in confined spaces such as tanks or pits. A special type of self-contained breathing apparatus may be used that includes a small cylinder of compressed air for escape, but that is supplied with air through an air line for normal work purposes.

Positive pressure hose masks that are supplied by blowers and require no internal lubrication can be used. The wearer must be able to use the same route for exit as for entrance and must take precautions to keep the hose line free of entanglement. The air blower must be placed in an area free of contaminants.

Air line masks supplied with clean compressed air are suitable for use only where conditions will permit safe escape in case of failure of the compressed air supply. These masks are usually supplied with air that is piped to the area from a compressor. Extreme care must be taken to ensure that the air supply is taken from a safe source, and that it is not contaminated by oil decomposition from inadequate cooling at the compressor. A safer method is to use a separate compressor of the type not requiring internal lubrication. Pressure reducing and relief valves (as well as suitable traps and filters) must be installed at all mask stations. An alternate arrangement frequently used is high pressure breathing air from standard (200 cu. ft.) cylinders, with a demand-type valve and face piece.

Chemical cartridge respirators may be used to avoid inhaling disagreeable but relatively harmless concentrations of ammonia vapor. These respirators, however, are not recommended for protection where toxic quantities of ammonia may be encountered.

Caution: Protective creams alone do not afford adequate protection.

FIRST AID

Every employee should understand that direct contact with ammonia requires the instant application of large amounts of water to the affected area.

After severe exposure to ammonia gas, it is important to move the patient from the contaminated area promptly. In case of contact of liquid ammonia with the eyes or skin, immediate flushing with large quantities of running water is imperative.

In all cases of severe injury, call a physician at once, giving him a complete account of the accident.

Contact with Skin and Mucous Membranes

Speed in removing ammonia from contact with the patient and in moving the patient to an uncontaminated atmosphere is of primary importance. If skin contact is extensive and emergency showers available, the employee should get under the shower immediately. Contaminated clothing and shoes should be removed under the shower. In other instances, flushing with large amounts of running water should be continued for at least 15 minutes.

Under no condition should salves or ointments be applied to the skin or mucous membrane burns during the 24-hour period following the injury. Subsequent medical treatment is otherwise the same as for thermal burns.

Contact with Eyes

If even small quantities of ammonia enter the eyes, they should be irrigated immediately and copiously with water for a minimum of 15 minutes. The eyelids should be held apart during the irrigation to ensure the contact of water with all the tissues of the eye surfaces and lids. A physician should be called at the earliest possible moment. After the first 15-minute period of irrigation, if a physician is not available, the

irrigation should continue for a second period of 15 minutes. It is then permissible as a first aid measure to instill 2 or 3 drops of 0.5 percent pontocaine solution or an equally effective aqueous topical anesthetic. No oils or oily ointment should be instilled unless ordered by a physician. The employee should be sent to a physician, preferably an eye specialist, as soon as possible.

Taken Internally

If liquid anhydrous ammonia has been swallowed, call a physician immediately. If the patient is conscious and able, he should drink large amounts of water to dilute the chemical. Do not induce vomiting if the patient is in shock, extreme pain, or unconscious. If vomiting begins, place the patient face down with head lower than hips; this prevents vomitus from entering the lungs and causing further injury.

Nose and Throat

Irrigate nose and mouth with water continuously for 15 minutes. If the patient can swallow, encourage him to drink large quantities of 0.5 percent citric acid solution or lemonade.

Never attempt to give anything by mouth to an unconscious patient.

Inhalation

Exposed persons should be removed at once to an uncontaminated area. If the exposure has been to minor concentrations for a limited time, usually no treatment will be required.

When there is severe exposure to higher concentrations, and if oxygen apparatus is available, oxygen can be administered but only by a person properly trained for such duty. If the patient is not breathing, an effective means of artificial respiration should be initiated immediately. Call a physician.

The patient should be kept comfortably warm but not too hot and should be kept at rest.

Never attempt to give anything by mouth to an unconscious patient.

Asphyxiation

Where breathing is weak, administer oxygen or mixtures of carbon dioxide and oxygen containing not more than five percent carbon dioxide. It can be administered intermittently for periods of 2 minutes over a total time not to exceed 15 minutes. (This mixture, already prepared and with necessary apparatus, can generally be obtained from local fire or police departments or hospitals.)

If breathing has ceased, start artificial respiration immediately.

Artificial respiration when administered by an inexperienced person is definitely hazardous following exposure to ammonia, and should be avoided where possible. The use of a pulmotor is not recommended because its violent action will irritate and may severely injure the lungs. However, a resuscitator used with oxygen and operated by a trained person is recommended.

First Aid Supplies

It is recommended that the following first aid supplies be kept on board (in addition to emergency protective equipment):

- One quart bottle of 0.5 percent citric acid solution
- One pound sealed package of sterilized gauze

These supplies should be stored in clean, accessible cabinets in a location that is not likely to be affected by an ammonia leak.

ACTION IN THE EVENT OF A LEAK

Leak Detection

A leak in the ammonia valve connections or feed lines is at once detected by odor. The exact location of the leak may be detected by allowing the fumes from an open bottle of hydrochloric acid (or from a squeeze bottle of sulfuric acid, or from an SO_2 aerosol container) to come in contact with the ammonia vapor, which produces a dense, white fog. Leak detection can also be obtained with moist phenolphthalein or litmus paper, which will change color in ammonia vapor. Phenolphthalein paper may be obtained free of charge from ammonia manufacturers or upon request. Sulpher tapers are not recommended.

If there is any question as to the seriousness of a leak, a gas mask of the type approved by the U.S. Bureau of Mines for use with ammonia should be worn. All persons not equipped with such masks should leave the affected area until the leak has been stopped.

If ammonia vapor is released, the irritating effect of the vapor will force personnel to leave the area before they have been long exposed to dangerous concentrations. If, despite all precautions, a person should be trapped in an ammonia atmosphere, he should breathe as little as possible and open his eyes only when necessary. If no gas mask is available, partial protection may be gained by holding a wet cloth over the nose and mouth. Since ammonia vapor in air will rise, a trapped person should remain close to the floor to take advantage of the lower vapor concentrations at that level.

Although ammonia is flammable only within the narrow limits of 16 to 25 percent by volume, the mixture of air with ammonia will broaden this range. Therefore, every precaution should be taken to keep sources of flame or sparks from ammonia areas. In the event that fire should break out in an area containing ammonia, every effort should be made to remove portable ammonia containers from the premises. If they cannot be removed, firemen should be informed of their location.

When a leak occurs in a congested area where atmospheric dissipation is not feasible, the ammonia should be absorbed in water. If liquid ammonia has been released, its high solubility in water may be utilized to control the escape of ammonia vapor. Application of a large volume of water from a fog or spray nozzle will lessen vaporization as the vapor pressure of ammonia in water is much less than that of liquid ammonia. Liquid ammonia should not be neutralized with acid; the heat generated by the reaction may increase the fumes.

APPENDIX C
SAMPLE WELL-HANDLING FORM

TUNA HANDLING LOG FOR VESSEL_____ WELL_____

CHIEF_____ SKIPPER_____ TRIP DATES_____TO_____

SET NO.	DATE	HOURS IN NET	TONS IN SET	TONS ADDED TO WELL YF/BE	TONS ADDED TO WELL SJ	SIZE (LBS.) YF/BE	SIZE (LBS.) SJ	HOURS TO 35 F.	DAYS IN RSW
___	_____	_____	_____	_____	_____	_____	____	_____	_____
___	_____	_____	_____	_____	_____	_____	____	_____	_____
___	_____	_____	_____	_____	_____	_____	____	_____	_____
___	_____	_____	_____	_____	_____	_____	____	_____	_____
___	_____	_____	_____	_____	_____	_____	____	_____	_____
___	_____	_____	_____	_____	_____	_____	____	_____	_____

CONDITION	DATE	HRS. TO 20	6 HRS.	12 HRS.	24 HRS.	36 HRS.	48 HRS.	3 DAYS	7 DAYS	LAST DAY
			<-----TEMPERATURE-----							>
FOAMED	_____	_____	_____	_____	_____	_____	_____	_____	_____	_____
FOAMED	_____	_____	_____	_____	_____	_____	_____	_____	_____	_____
BRINED	_____	_____	_____	_____	_____	_____	_____	_____	_____	_____
REBRINED	_____	_____	_____	_____	_____	_____	_____	_____	_____	_____

INCHES FISH BELOW COMBING WHEN PACKED:____ DATES DRIED_____TO_____

	LBS. SALT ADDED	INITIAL	DAY 1	DAY 2	DAY 3	DAY ___	DAY ___	DAY ___	FINAL
		<-------BRINE SALINITY OR FREEZING POINT-------							>
BRINED	_____	_____	___	___	___	___	___	___	_____
REBRINED	_____	_____	___	___	___	___	___	___	_____

DAYS IN BRINE:_____ UNLOADING TEMPERATURE: (BRINE)_____ (TUNA)_____

TONS UNLOADED: (SJ)_____ (YF/BE)_____

SALT CONTENT OF FISH BY SPECIES AND WEIGHT (LBS.)

WELL LOCATION	SKIPJACK UNDER 3	SKIPJACK 3-4	SKIPJACK 4-7.5	SKIPJACK OVER 7.5	YELLOWFIN UNDER 3	YELLOWFIN 3-4	YELLOWFIN 4-7.5	YELLOWFIN 7.5-20	YELLOWFIN 20-60	YELLOWFIN OVER 60
	<------SKIPJACK----->				<----------YELLOWFIN---------->					
TOP	____	_____	_____	____	____	_____	_____	_____	_____	____
MIDDLE	____	_____	_____	____	____	_____	_____	_____	_____	____
BOTTOM	____	_____	_____	____	____	_____	_____	_____	_____	____

COMMENTS:

APPENDIX D
ADJUSTING BRINE SALINITY

Leaving some RSW in a well during brining dilutes the brine, reducing its salinity. The final salinity depends on the salinity of the added brine, the salinity of RSW (3.5 percent), and the percent of each in the well.

For example, consider brine made of 50 percent RSW and 50 percent brine with a salinity of 22.5 percent. The salinity of the newly made brine is the weighted average of the salinities of RSW and dense brine, 13.0 percent [(22.5% x 0.50) + (3.5 x 0.50)]. Note the percent of the well filled by each fluid is expressed in its decimal form (50% = 0.50). If this brine was a mixture of 60 percent dense brine and 40 percent RSW, its salinity would be 14.9 percent [(22.5% x 0.60) + (3.5% x 0.40)].

It is more useful to calculate the percent of the fluid that must be dense brine to form brine with a desired salinity. When RSW is replaced with dense brine, the following equation applies:

$$\frac{(\text{Desired Salinity} - 3.5\%)}{(\text{Dense Brine Salinity} - 3.5\%)} \times 100 = \text{Percent of fluid in well which must be dense brine}$$

If a salinity of 17 percent (9°F, fp) is required in a well containing RSW mixed with 22.5 percent salinity brine, then:

$$\frac{(17.0\% - 3.5\%) \times 100}{(22.5\% - 3.5\%)} = \frac{13.5 \times 100}{19.0} = 71.0 \text{ percent of the fluid in the well must be dense brine.}$$

Several methods can be used for estimating when a given fraction of the RSW in a well has been removed (for replacement by dense brine). If all the RSW is removed from a well prior to packing, the time needed to refill the well with RSW is an indirect measure of the amount of RSW in the well. If the well is refilled with RSW in 8 minutes, 71 percent of that time or 5.7 minutes (8 minutes x 0.71) will be required to pump in the necessary brine. Obviously, the RSW must first be pumped out of the well for 5.7 minutes.

If all the RSW is not removed during packing, the rule of thumb that one minute of pumping is needed for every ten tons of fish capacity can be used to estimate the amount the RSW and dense brine required.

The above equation can be modified and used to adjust the salinity in wells where the brine is too weak and dense brine must be added. The equation becomes:

$$\frac{\text{(Desired Salinity - Existing Salinity)}}{\text{(Dense Brine Salinity - Existing Salinity)}} \times 100 = \text{Percent of brine to be replaced with dense brine.}$$

Using this equation for a well containing 12 percent brine to which dense brine with 23 percent salinity is added to make a 19 percent brine (fp=5°F), we find that:

$$\frac{(19 - 12) \times 100}{(23 - 12)} = 63.6 \text{ percent of the brine must be replaced with dense brine.}$$

APPENDIX E
FABRICATION AND USE OF THERMOCOUPLES

This appendix describes the equipment and procedures currently used on some United States purse seiners to monitor fish temperatures. A specific list of the necessary equipment is provided; however, the primary components are a portable temperature indicator and a length of thermocouple wire with a thermocouple temperature sensor at one end and a plug for connecting the wire to the temperature indicator at the other. This equipment is readily available from companies that specialize in scientific measurement and process control equipment.

PROTECTING THE TEMPERATURE INDICATOR

The manufacturer of the temperature indicator should be instructed to seal the circuit board and opening in the case against moisture. This will not completely prevent contaminants from entering the instrument; consequently, the following procedures are recommended:

a) Fabricate a short "interconnect cable," which will protrude from the sealed plastic bag and connect with the thermocouple wire. The interconnect cable is made by connecting 6 to 12 inches of thermocouple wire to male and female plugs.

b) Place the instrument in a sealed plastic bag.

FABRICATION OF THERMOCOUPLES

Type K thermocouple wire (composed of one Chromel and one Alumel wire) is recommended because of its resistance to

corrosion and non-reaction with fish flesh. Solid wire, B&S gauge 20, with a PVC insulated outer jacket is recommended. The outer jacket covers two wires, red (negative) and yellow (positive).

> Be sure the red wire is connected to the "minus" terminal. This is contrary to all other electronic-electrical standards. Otherwise, serious errors in temperature measurement will occur.

To make a thermocouple, the following procedures are recommended:

a) Strip approximately 1/2 inch from the thermocouple wires. Twist together tightly for a good mechanical connection. Solder (resin core solder) these twisted wires together for a good electrical connection using a 100 to 150-watt gun. Apply plenty of heat because thermocouple wire is more difficult to solder than ordinary copper wire. Inspect to ensure a good electrical connection. The twisted wires form the actual thermocouple "junction" that measures temperature.

b) Protect with shrink tubing that overlaps the outer jacket about half an inch and extends slightly beyond the end of the twisted junction (a little over one inch long). Apply heat to shrink the tubing tightly around the thermocouple joint. Do not burn the tubing or the thermocouple insulation.

c) Cut the thermocouple wire to a length sufficient to reach from the remote corners of the well to a location protected from spray and convenient for taking the

temperature measurements. Strip about 3/8 inch from the unprepared end of the thermocouple wire. Attach a male thermocouple connector (the red wire is negative). Coat the inside of the thermocouple connector with a clear silicon dielectric grease to reduce corrosion.

d) Test the thermocouples before installation by connecting them to the temperature indicator (using the interconnect cable). The indicator should indicate the ambient temperature at the location of the twisted thermocouple junction. If not, check the thermocouple connections, including the junction.

e) Nylon tie-wraps may be used to "bundle" the thermocouple wires together.

USE OF THERMOCOUPLES

Thermocouples are used to measure backbone temperature, indicate when the well can be dried, and show there is enough refrigeration applied to a dry well to keep the fish frozen. A minimum of two fish should be equipped with thermocouples: one relatively large fish stored near the middle of the well and one relatively small fish placed on the top of the well under the middle of the rack. To install a thermocouple in a small fish, the following procedures are recommended:

a) Use an ice pick or other pointed tool to make a hole extending to the backbone through the thickest part of the dorsal (upper) surface of the fish (Figure E-1).

b) Push the thermocouple junction covered with shrink tubing into this hole until it hits the backbone.

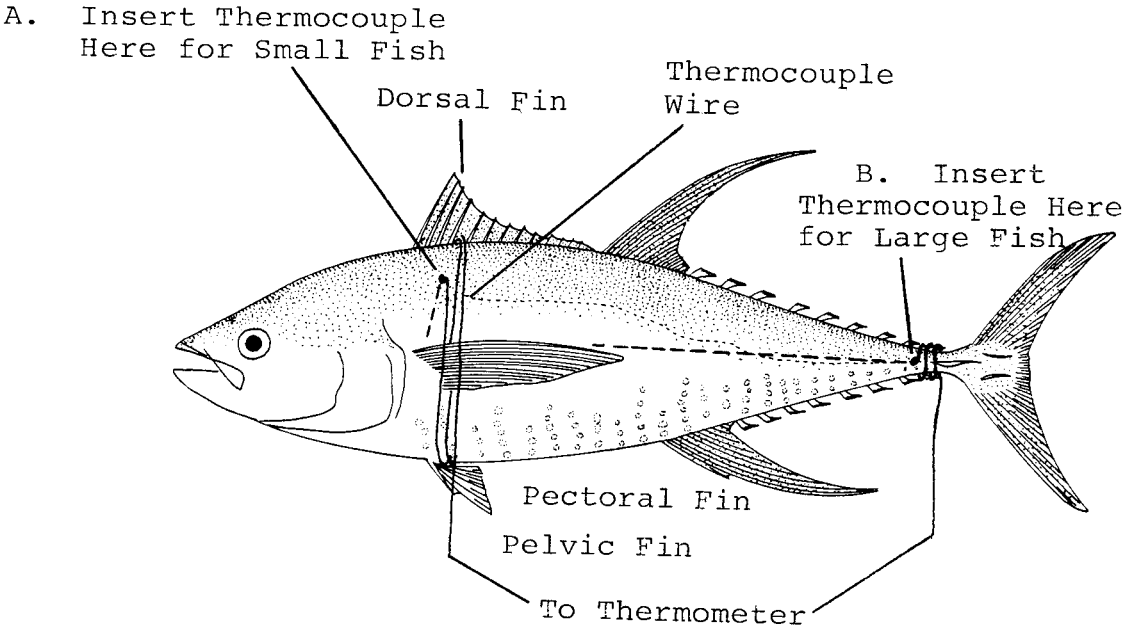

Figure E-1. **Thermocouple Placement**

c) Hold the thermocouple in place and roll the fish over several times, wrapping the thermocouple wire alternately over and under the dorsal, pectoral, and pelvic fins.

d) Secure the thermocouple wire by placing a tie-wrap around all the strands on the ventral (lower) surface of the fish.

To install a thermocouple in a large fish, the following procedures are recommended:

a) Starting near the tail, insert a long pointed tool and slide it along the backbone making a hole that extends to the thickest part of the fish (Figure E-1).

b) Push the thermocouple junction into this hole until it reaches the end.

c) Hold the thermocouple in place and wrap the thermocouple wire around the base of the tail several times.

d) Secure the thermocouple wire by putting a tie-wrap around all the strands wrapped around the tail.

At the appropriate time, the thermocoupled fish is dropped into the well and enough thermocouple wire is played out to allow the wire to hang straight down from the spot on the coaming as far away as possible from the path of the fish leaving the chute. When the RSW is pumped out of the well during packing or brining, an additional length of thermocouple wire is needed to avoid breaking the wire.

CALIBRATION OF THE SYSTEM

The system should be calibrated at the beginning of each trip and every month thereafter. To do this, the following procedures are recommended:

a) Prepare an ice bath by filling a thermos or quart jar with crushed ice (made from fresh water) and fresh water. Stir vigorously for a couple of minutes to be sure all the water has reached the freezing point (32°F). The bath should be stirred occasionally to be sure that no temperature gradients form.

b) Using the interconnect cable, connect a thermocouple to the temperature indicator. Place the thermocouple junction in the ice bath making sure it is surrounded by ice and water and not touching the container. The indicator should read 32°F (or 0°C if a centigrade scale is used). If it does not, correct the reading by changing the adjustment usually located on the back of the indicator.

c) All the thermocouples made from the same spool of thermocouple wire should now be calibrated. If this calibration procedure is not followed, an error of up to 4°F may occur due to tolerances in the manufacture of the thermocouple wire.

EQUIPMENT LIST

The following is a list of the equipment (and quantities) normally required to fabricate thermocouples for use on board purse seiners with 17 to 19 fish wells.

Description	Quantity
Hand-held battery-operated temperature indicator factory sealed for use in a marine environment	1
Type K thermocouple wire with PVC insulation	2,000 feet
Type K thermocouple connectors - Male, round pin	50
Type K thermocouple connectors - Female, round pin	5
Type K thermocouple connectors - Male, flat pin to mate with temperature indicator	5
Electronic solder (resin core)	1 pound
100 to 150 watt soldering gun	1
Shrink tubing	25 feet
Nylon tie-wraps	100

LITERATURE CITED

Frank, H.A., D.H. Yoshinaga and W.-K. Nip 1981
Histamine Formation and Honeycombing during Decomposition of Skipjack Tuna, Katsuwonus pelamis, at Elevated Temperatures. Mar. Fish. Rev. 43(10): 9-14.

Frank, H.A., D. H. Yoshinaga and I.-P. Wu 1983
Nomograph for Estimating Histamine Formation in Skipjack Tuna at Elevated Temperatures. Mar. Fish. Rev. 45(4/6): 40-44.

Glassen, T., and R. Cottrell 1984
Personal Communication of the Results of Data Analysis. Campbell Industries, San Diego, California.

Lassen, S. and J. Rawlings 1959
A Manual of Refrigeration Practice for Tuna Clippers. California Fish Canners Association, Terminal Island, California.

Otsu, T. 1957
Development of "Honeycombing" in Hawaiian Skipjack Tuna. Comm. Fish. Rev. 19: 1-8.

Patterson, P.H. and F.D. Burns 1984
Salt Uptake and Histamine and Honeycomb Formation in Brine Frozen Tuna. United States Tuna Foundation, San Diego, California.

Riedel, L. 1956
Calorimetric Investigations of the Freezing of Fish Meat. Kaltetechnik 8, No. 12, P.374. (German)