SPUDS

SELF-PROPELLED UNDERWATER DESIGNED SUBMARINE

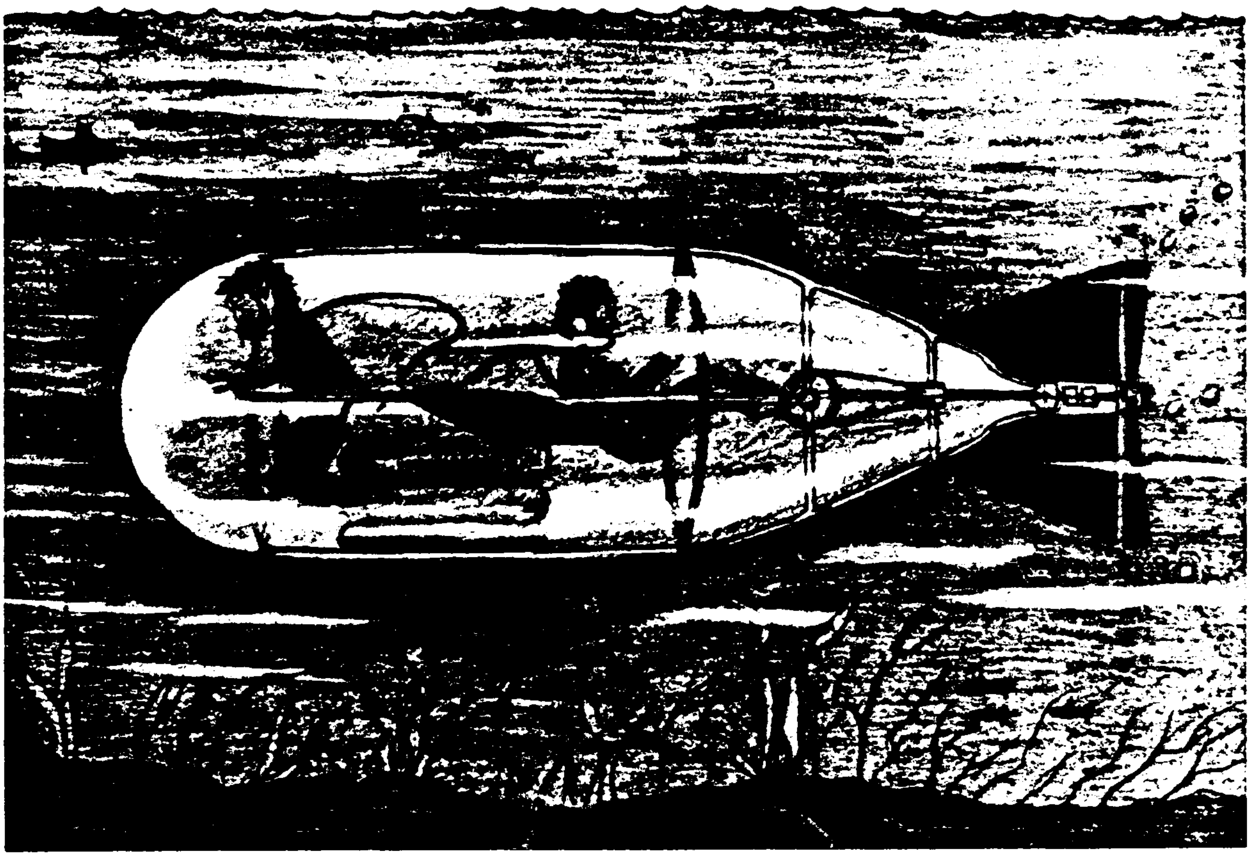

UNIVERSITY OF NEW HAMPSHIRE
OCEAN PROJECTS COURSE (TECH 697)
SPUDS PROJECT REPORT
MAY 1989

UNHMP-AR-SG-89-8 $7.70

TABLE OF CONTENTS

PREFACE

This report has been prepared in partial fulfillment of the requirements of the University of New Hampshire Ocean Projects Course (TECH 697). The report was prepared by project team members for their assigned area of responsibility as described below.

Daniel Connors (ME Dept)	Team Leader Controls Instrumentation
William Pope (ME Dept)	Outer Skin Structure Nose Bubble Weight & Balance Emergency Escape System
Lorrie Perron (ME Dept)	Life Support Ergonomics & Physiology Deadman Switch
Peter Keravich (ME Dept)	Drive Train
Larry Maugh (ME Dept)	Propeller Shroud

Advisors for the project were as follows:

Gerry Sedor	Hull Structure
Gene Almendinger	Naval Architechure
Neil Vroman	Ergonomic Testing
Paul Lavoie	Dive Master
Rob Swift	Mechanical Engineering
Lynn Darnell	Bubble Fabrication
Marina Martini	Deadman Switch
Jeff McCalla	Dive Planes & Hull Ribs
Ron St Germain	Drive Train & Test Frame

INTRODUCTION

SPUDS is an acronym for Self Propelled Underwater Designed Submarine. The challenge of SPUDS was to design and build a two-person, human powered submersible which could be used to compete in the First International Submarine Race in West Palm Beach, Florida on June 23, 1989.

The race, which is sponsored by the H.A. Perry Foundation, Inc., was developed to improve the efficiency of hydrodynamics, propulsion and life support systems for small, underwater vehicles. Profound lessons may be learned from building and operating an "optimized design." The rules of this competition restrict the vehicle's power system to human power, thus focusing attention on maximizing the vehicle's design and life support system.

In the competition the vehicle will be rated in four separate categories: cost effectiveness, innovation, speed, and overall performance. A panel of distinguished experts in the field of marine technology will judge all categories.

Vehicle design and safety guidelines for the purpose of this competition were submitted to each contestant outlining each of the guidelines as design criteria.

VEHICLE CHARACTERISTICS

Length overall	17 feet
Diameters	major = 4 feet minor = 3 feet
Vehicle weight in air	no crew or life support = 254 lbs with crew and life support = 717 lbs
Drive train	bicycle pedals, gear box, universal joint, and trainable propeller
Propulsion system	one person pedaling
Hull material	1/16 inch Lexan
Frame material	epoxy sealed ribs with electrical metallic tubing as longitudinal supports
Guidance	instruments for yaw pitch and roll
Steering control	trainable propeller
Turning radius	12 feet
Pitch angle control	two rear dive planes
Depth control	two rear dive planes
Propeller	chord length = 3.5 inches pitch = 22.3 inches diameter = 42 inches
Shroud	Lexan with Aluminum supports
Design RPM	diver input = 40 RPM propeller output = 120 RPM
Vehicle velocity	approximately 3-4 knots
Depth	limited to 50 feet
Escape feature	clam shell canopy
Safety feature	deadman switch
Life support	SCUBA gear
Emergency life support	pony bottles

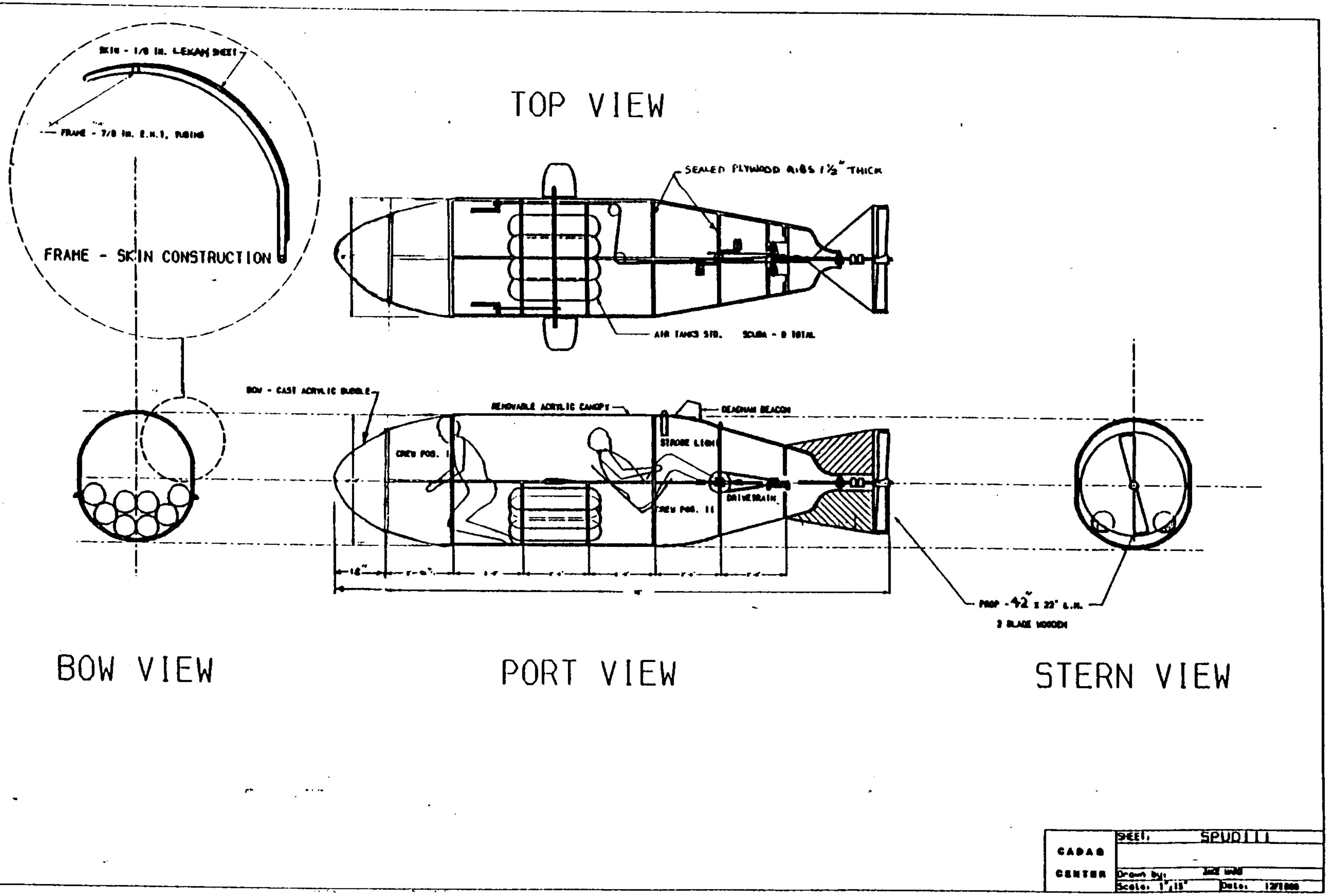
TOP VIEW
SEALED PLYWOOD RIBS 1½" THICK
AIR TANKS STD. SCUBA - 8 TOTAL
SKIN - 1/8 IN. LEXAN SHEET
FRAME - 7/8 IN. E.M.T. TUBING
FRAME - SKIN CONSTRUCTION
BOW - CAST ACRYLIC BUBBLE
REMOVABLE ACRYLIC CANOPY
DEADMAN BEACON
STROBE LIGHT
CREW POS. I
CREW POS. II
DRIVETRAIN
18"
PROP - 42" x 22" L.H.
2 BLADE WOODEN
BOW VIEW
PORT VIEW
STERN VIEW
CADAG CENTER
SHEET: SPUD III
Drawn by: JACK WOOD
Scale: 1"/15"
Date: 12/1988

CONTROLS

I. Design criteria:

1. Reduction of drag forces on submarine.
2. Ease of fabrication.
3. Adequate impact strength to withstand collisions during operation.
4. Cost effectiveness.
5. Minimum weight.
6. Ease of maintenance.
7. Capability for control in roll, yaw, and pitch planes.
8. Ability to maintain constant pitch angle to provide maximum speed.

II. Definition

The various types of controls found on the submersible vehicle include roll, yaw, and pitch. Control of roll that prevents the vehicle from spinning on its longitudinal axis. Yaw control provides the ability to move the vehicle either to port or starboard. Finally, pitch control provides the ability to change depth or dive or surface the vehicle. Figure C shows a schematic drawing of the control system.

III. Roll

In our control system roll had to be minimized.

To minimize roll every component of the submarine was built so everything was on the center axis or was symmetrical to it. Therefore no moments would spin the sub on its longitudinal axis. If an inertial thrust from the propeller caused the sub to roll, then a trim tab could be added to the rear dive planes to alleviate the problem. Further testing and an adjustable trim tab will minimize any roll acting on the vehicle.

IV. Yaw

To maximize yaw control of the submarine, a trainable propeller was placed at the end of the drive train. The propeller's thrust is used to move the vehicle to port and starboard with ease by developing a small rotation of the propeller. Since the sub was designed with a shroud, control lines were attached to the port and starboard edgesof the shroud. From the edge of the shroud each line continues through the starboard side of the submarine until it connects to a control stick in the bow of the vehicle. Figure C shows the yaw control system. A movement of fifteen degrees of the control stick rotates the propeller through forty-five degrees around a vertical axis, which would be the maximum angle that the propeller would be able to operate. The propeller is restricted to move forty-five degrees from its center line because larger angles would resut ina loss of thrust due to the lack of efficiency in the universal joint.

Testing in water showed that with the propeller in its

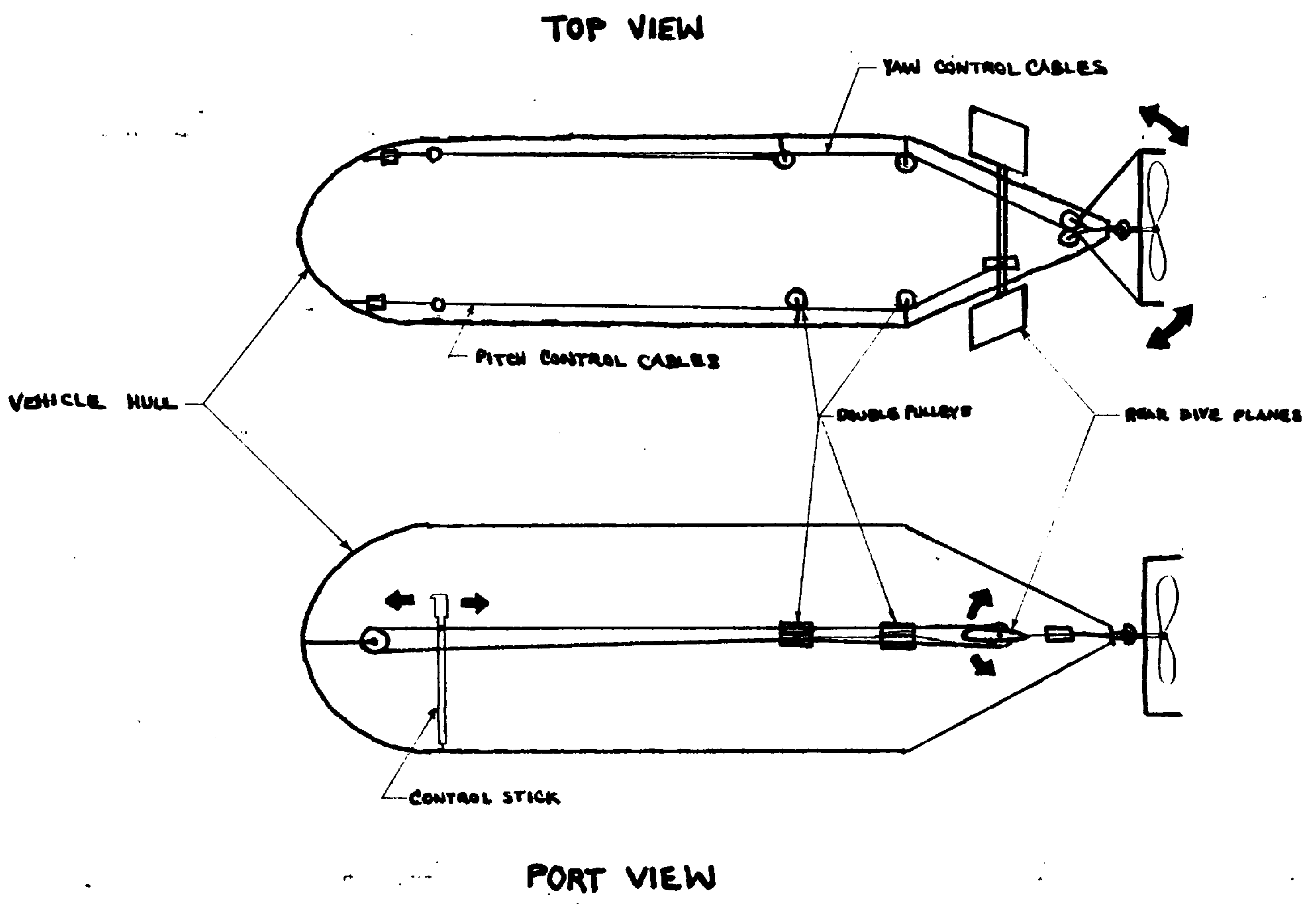

SPUDS: FIGURE C

CONTROL SYSTEM

maximum position of forty-five degree, the entire submarine was able to turn within a radius of twelve feet. This turning radius satisfied the race's design criteria because the smallest turn in the race course is a twenty-eight foot radius.

V. Pitch

Design of the pitch control has to be very dependable and the most sensitive of all controls. The pitch control has to solve two problems over the course of the race: it must have a large enough gain to account for the required two pounds of positive buoyancy at the beginning of the race, and it must also account for the added buoyancy that was created throughout the race due to the loss of mass from the divers' exhausted air. Over the course of the race, assuming the race to last thirty minutes, both divers consume approximately fifteen pounds of air. Therefore the pitch control must be able to generate at least seventeen pounds of downward thrust at the end of the race to accommodate the net positive buoyance at that time.

One problem encountered in designing a pitch control system with a large gain was over steering and porpoising. If the sub was always traveling in an up and down motion, it would lose a lot of net speed in the hrizontal direction. In other words, the pitch control must provide a lot of thrust, but must also be able to keep the sub at a constant pitch angle.

As a result of the previous criteria, pitch is controlled in our vehicle by rear dive planes. Two rear dive planes on each side of the sub provided the needed downward thrust that would be needed throughout the entire race. The area of these planes and the shape created the most difficulty in design because the eventual speed of the sub was an unknown. The design of the planes was supported through a computer simulation study conducted by ARAP, Inc. of Vienna, VA. The computer simulation provided us with both the shape and the area of the dive planes, and was arranged by an advisor to the project team.. The best area was found to be 1.7 square feet, and the best shape was that similar to an air foil found on a airplane with a span of 1.4 feet and root chord of 1.4 feet. Figure C shows the position of these planes. Further testing will provide an accurate evaluation of the performance.

The rear planes were bolted to an axle that spanned the width of the submarine. A pulley is mounted on the axle, and fixed to the top and bottom of the pulley are two cables. These cables run parallel with the yaw control lines, except that they run on the port side of the sub. At the end of the cables they meet a control stick identical to that installed for yaw control. Figure C is a drawing of the yaw control system. Fifteen degrees on this control stick will produce a ninety degree rotation on the rear dive planes. Further testing will determine the amount of thrust that these two planes provide.

If testing results indicate that the rear planes do not provide enough thrust to keep the submarine from surfacing, additional thrust will be provided through the installation of additional horizontal control surfaces located near the bow of the vehicle. These planes will provide enough thrust to account for the buoyancy the vehicle had at the beginning of the race. The stern planes would be used to compensate for the positive buoyancy that developed over the course of the race.

INSTRUMENTATION

I. Design Criteria

1. Ability to operate properly at design depths.
2. Ability to provide sufficient information to the pilot to allow him to control the submarine under limited visibility.
3. Cost effective and innovative.

II. Design

The navigator must have instruments to provide him with information on depth and position in each control plane (roll, yaw, and pitch). To provide depth information a capillary depth gage is attached to the submarine's instrument panel. Direction in the yaw plane is provided by a compass attached to the instrument panel. To provide information in the roll and pitch plane, two instruments were constructed.

Two Archimedes tubes were sealed with colored fluid less a small air bubble. Then the tube was attached to half of an ellipse made out of plywood. After attaching the two units to the instrument panel, each would detect a slight change in the roll or pitch direction. Figure I shows the entire instrument panel after construction.

The navigator can operate the submarine in reduced visibility since the instruments give him the correct

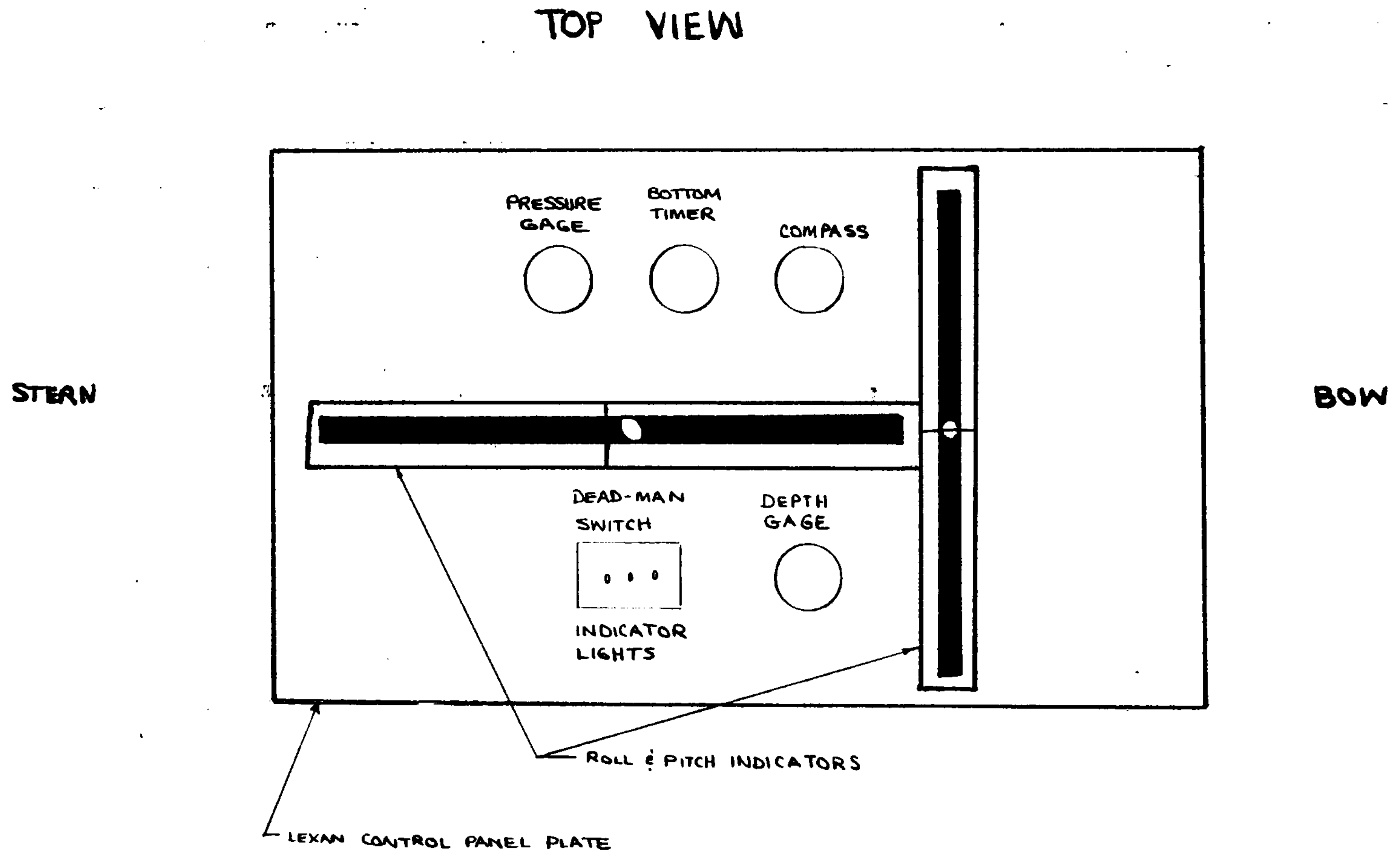

FIGURE I

INSTRUMENT PANEL

position of the sub at all times. The navigator needs to be able to drive blind (only on instrumentation) because silt or mud in the water may prevent him from seeing what is in front of him.

OUTER SKIN

I. Design criteria:

1. Provide reduction of drag forces on submarine
2. Ease of fabrication (for cold forming around structure and thermoforming nose bubble)
3. Addequate impact strength shipping and collisions during operation (hitting bottom, etc.)
4. Cost effectiveness
5. Minimum weight
6. Ease of maintanance
7. Provide visibility to environment so that the operators are comfortable inside the submarine

II. Hull shape

The shape of the outer hull was designed to reduce the drag forces on the vehicle during operation. Research showed that the drag forces are a function of the cross-sectional area and wetted surface area of the vehicle. Based on the projected speed of the vehicle (1-3 knots) it was found that:

c_{DT} (total drag coefficient)= $c_{DF}[1 + 1.5(D/L)^{1.5} + 7(D/L)^{3}]$

c_{DF} (frictional drag coeff.)= $0.075/[\log_{10}(Re-2)]^{2}$

Re (Reynold's #)= vL/ν

therefore,

$$c_{DF} = 0.075[\ 1 + 1.5(D/L)^{1.5} + 7(D/L)^{3}\ ]/\{\log_{10}[(vL/\nu) - 2]\}^{2}$$

From the above equation it can be seen that by increasing the length and decreasing the diameter of the vehicle the total drag coeffient would decrease thereby reducing the drag forces on the vehicle. To decrease the effective diameter and cross-sectional area of the vehicle an elliptically shaped cross-section was chosen. The size of the ellipse was minimized to 3' wide by 4' high in order to accomodate divers and equipment yet reduce drag forces.

Another source of potential drag found is the sharp angles encountered along the longitude of of the vehicle which would create eddy currents in the flow. Protrusions from the skin of the vehicle were also minimized to reduce drag. The final hull shape is shown in figure H1.

III. Skin material

One design criterion was to provide total visibility to the environment. To meet this criterion various clear plastics were considered. From the various plastics considered two were chosen for further study. These plastics were General Electric Lexan and Dupont Lucite acrylic.

From existing data provided by the manufacturers, the impact strength of 1/4" sheets of Lexan and Lucite were 200+ ft-lbs and 7 ft-lbs respectively. In lab, 1/16" Lexan and 1/10" Lucite were tested for their impact strength with a hammer. One blow to the Lucite caused it to shatter. The Lexan on the other hand never cracked but deformed a small

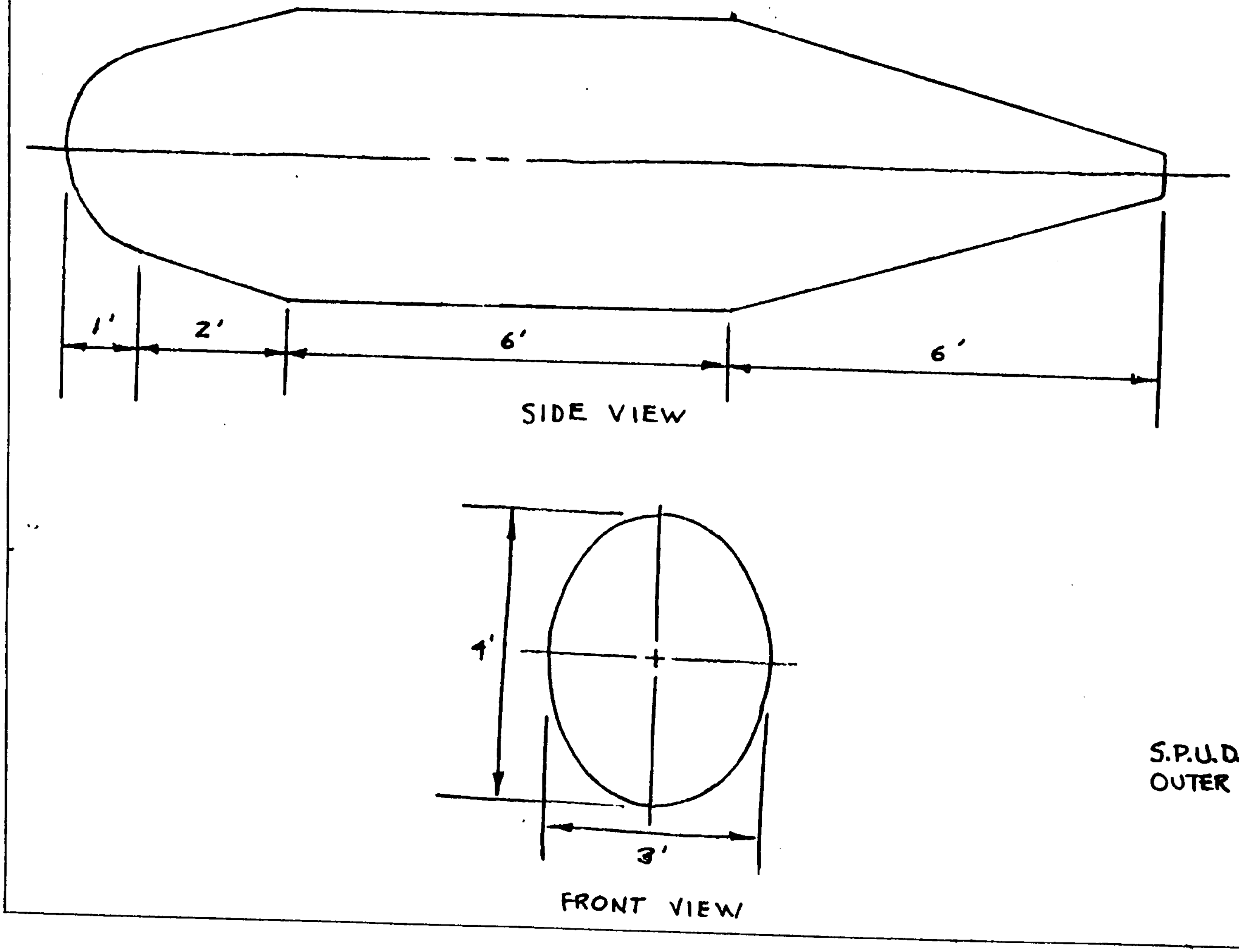

S.P.U.D.S.: Figure H1
OUTER SKIN DESIGN

amount after 30-35 blows.

The machinability of both materials was investigated. The Lucite tended to chip when holes were machined or when the material was cut in any way. Clean holes and smooth edges were able to be machined in the Lexan without chipping or distortion of the material.

The cold formability of both materials was examined by attempting to wrap a representative piece of each material around the minimum cross-sectional radius of the vehicle (0.25 ft). It was found that both materials could be cold formed easily around the 0.25 ft radius. The thermoformability of each material was tested by forming a 5" wide strip of each material around a 1 ft length of 7/8" outside diameter pipe using a heat gun as a temperature source. The Lucite was much easier to form than the Lexan and deformed at a lower temperature. Because of the water content of the Lexan material it was hard to form and a higher temperature was needed to deform it.

Cost comparison: 1/10" Lucite $1.00/ft^2
1/16" Lexan $1.50/ft^2
Weight comparison: 1/10" Lucite 0.45 lb/ft^2
1/16" Lexan 0.39 lb/ft^2

Lexan, with its excellent machinability, cold formability, low weight, and most importantly impact strength, was chosen for the outer skin of the vehicle, not including the nose bubble. Lucite (1/4 in thickness) was chosen for the nose bubble because of its thermoformability.

STRUCTURE

I. Design criteria:

1. Provide strength to support loads from drive train and controls
2. Cost effectiveness
3. Ease of fabrication
4. Provide bouyancy
5. Provide for attachment of outer skin, drive train, and controls
6. Ease of maintainance and revision

II. Origional design

The complete frame in the origional design was constructed out of EMT (Electronic Metallic Tubing) and appropriate compression fittings. The EMT was zinc coated steel with 7/8" outer diameter and 1/16" wall thickness. The piping was bent with a hand operated pipe bender into the shape shown in Figure S1. The pipes were planned to be filled with closed cell foam to provide bouyancy, but a few problems were encountered in the design during construction. These problems included:

1. An elliptical shape could not be achieved which could

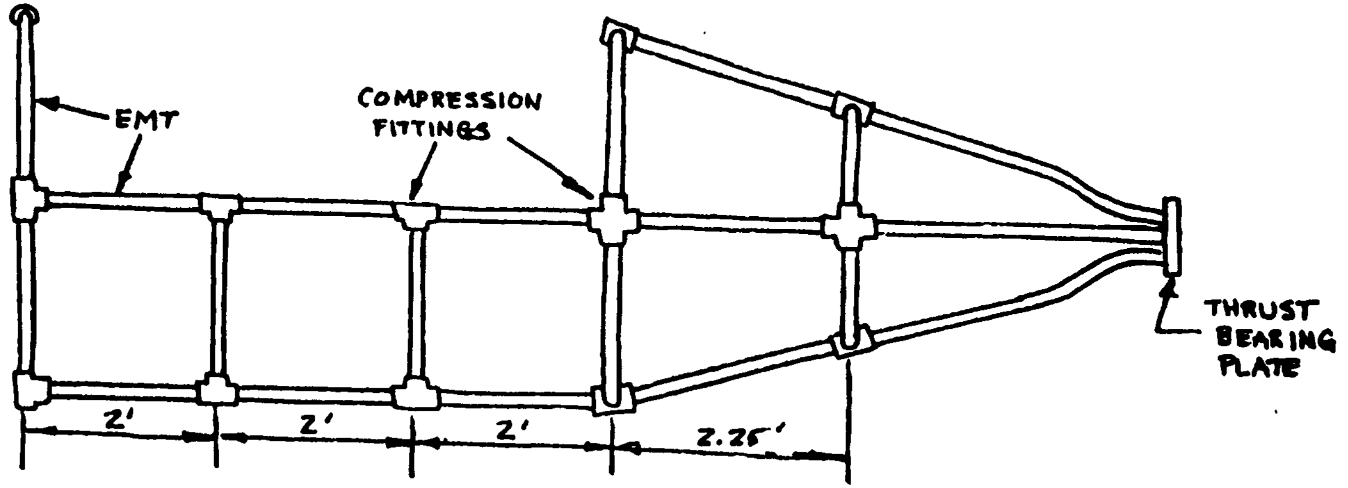

SIDE VIEW

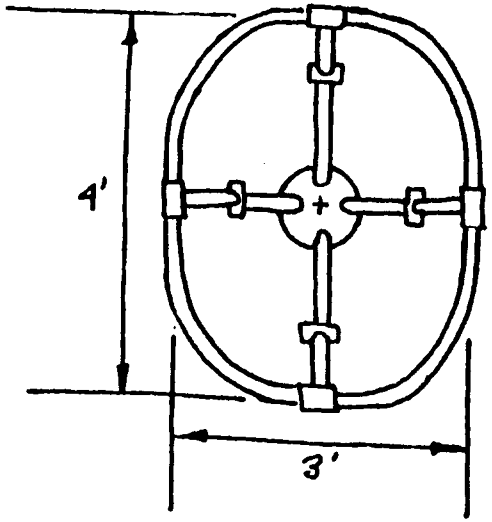

FRONT VIEW

S.P.U.D.S.: FIGURE S1
STRUCTURAL SKELETON
ORIGIONAL DESIGN

match the design on paper. The shape was that of an ellipse with its ends flattened and could not be held consistent down the length of the vehicle.

2. The strength of the compression fittings to repeated loads from the drive train and control system was very questionable.
3. Difficulties would be encountered when attempting to attach the outer skin, drive train, and control system. Any holes drilled into the piping would degrade the structral integrity of the vehicle.

III. Revised design

The revised design of the structure included constructing the cross-sectional ribbing out of plywood. The ribs were 1-1/2" (2 3/4" thicknesses) thick and were covered with a thick coat of epoxy resin containing a cotton fiber filler. When the vehicle was pool tested the epoxy resin was found to be sufficiently waterproof so that no air was found to leak from the ribs. An additional forward rib was also added for the attachment of the control system and a smaller nose bubble. The revised design is shown in Figure S2. Similar to the original design, the longitudinal members were EMT (7/8" OD, 1/16" wall). These members were attached to the ribbing with steel flanges in the mid-section where the ribs and members interfaced at 90°. In the nose and tail sections where the ribs and members interfaced at angles not equal to 90°,

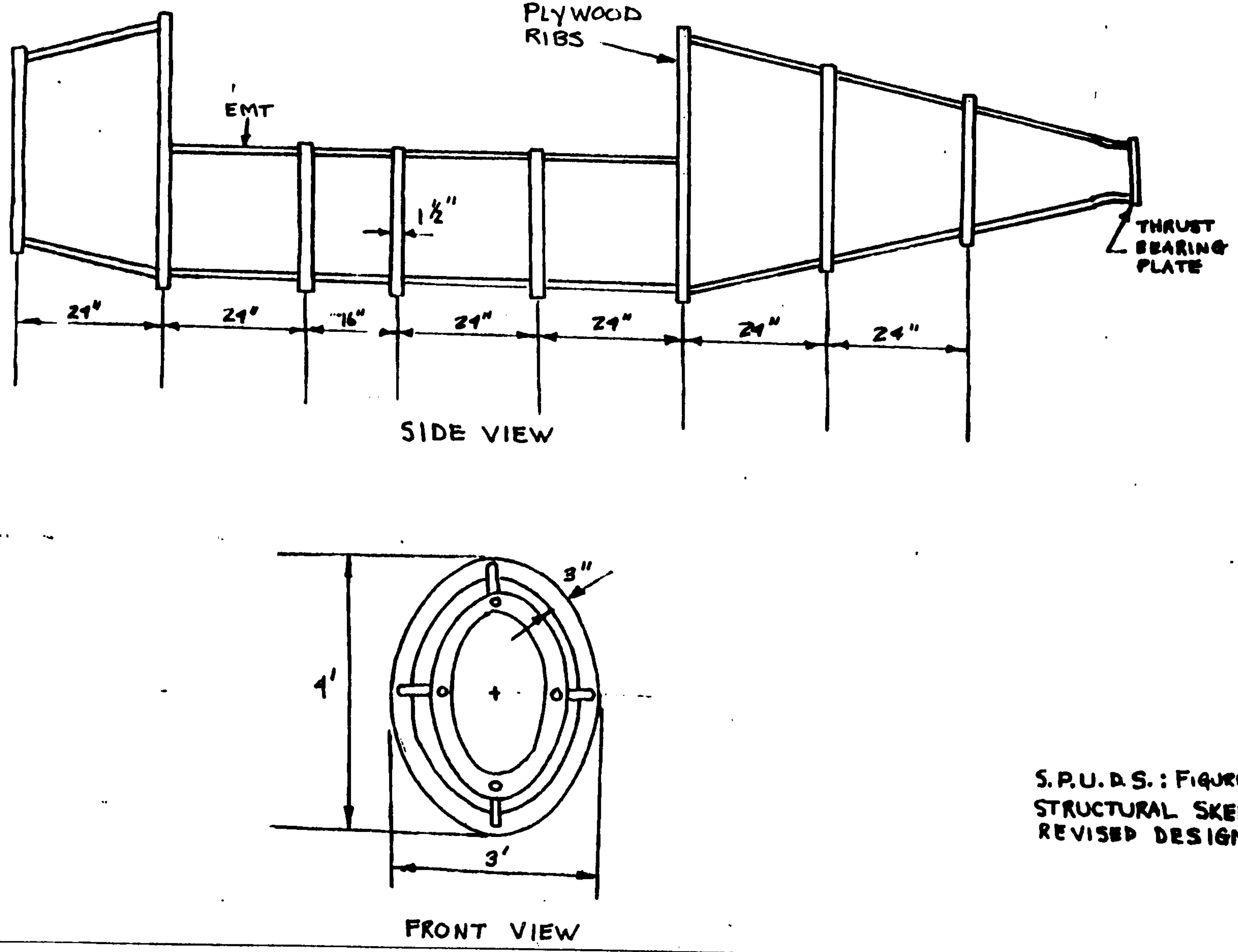

S.P.U.D.S.: FIGURE S2
STRUCTURAL SKELETON
REVISED DESIGN

aluminum angles were used to join the structure. This is shown in Figure S3. By constructing the frame in this way many problems wre alleviated:

1. An exact elliptical cross-section was achieved.
2. Identical ribs were fabricated easily by using a jigsaw to cut an elliptically shaped pattern rib. A router was then used to make exact replicas of the origional pattern rib.
3. The strength of the plywood was reliable.
4. The drive train and control system were attached easily by bolting into the plywood.
5. A hydrodynamically shaped outer skin was achieved by bevelling the ribs in the nose and tail sections to the correct angles.

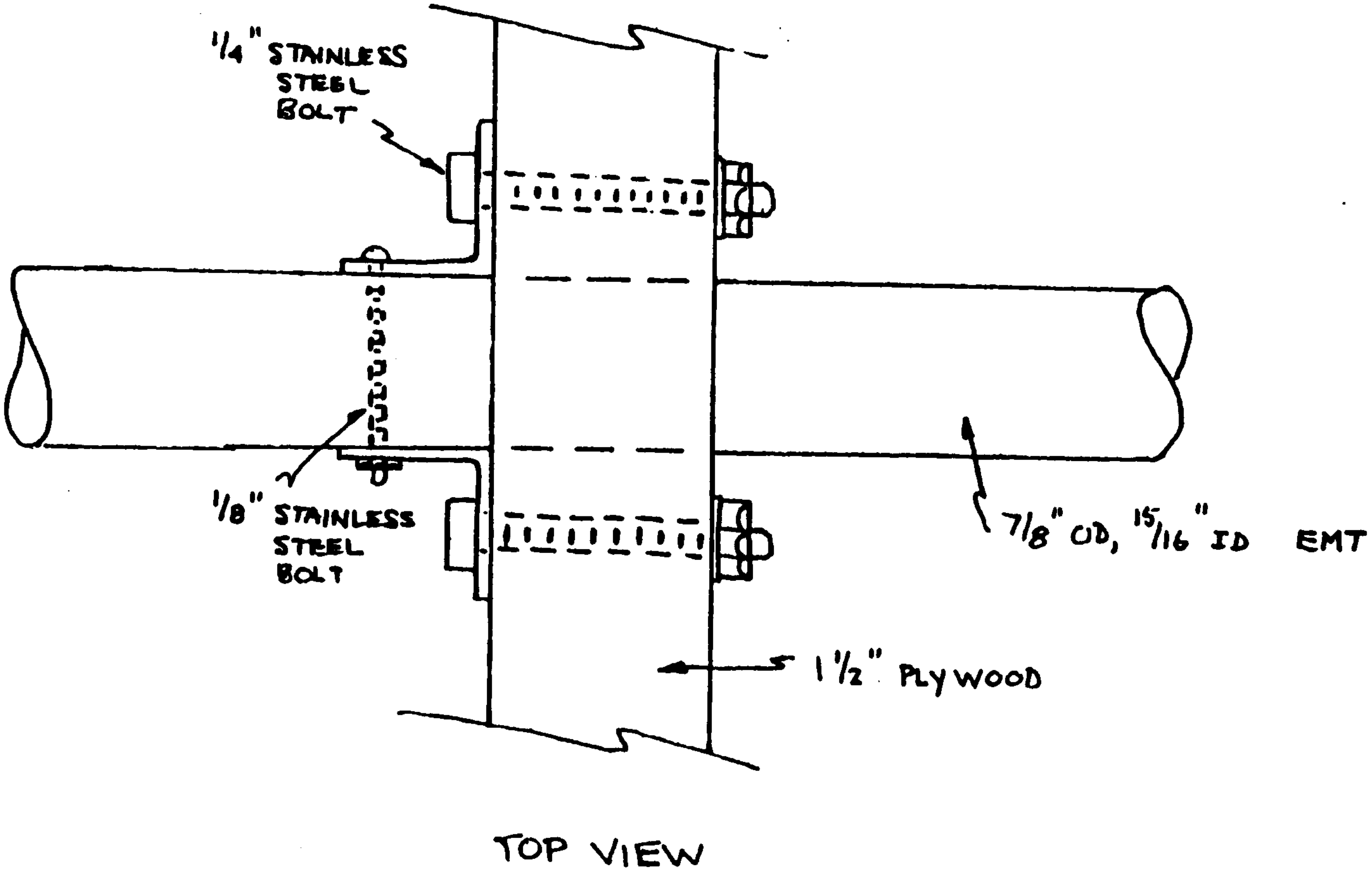

S.P.U.D.S. : FIGURE S3
PLYWOOD/EMT INTERFACE CONNECTION IN NOSE AND TAIL SECTIONS OF STRUCTURE
(REVISED DESIGN)

OUTER SKIN ATTACHMENT

I. Design criteria:

1. Ease of fabrication
2. Reduction of number of protrusions from outer skin of vehicle (drag reduction)
3. Avoidance of penetration into rib with bolts or screws to prevent plywood air leakage problems and degradation of structural integrity
4. Cost effectiveness
5. Ease of maintainance and replacement

II. Attachment design

Many alternatives for the attachment of the outer skin to the plywood ribs were considered. Since drilling holes or screws into the ribs was to be avoided a method of tying the skin onto the ribs was studied further. This method would prove to be easily fabricated and replaced if broken. The existing design includes drilling a hole into the Lexan on either side of the rib. A self-locking tie wrap similar to a garbage bag tie was fed through these holes and secured around the rib. Figure S4 shows a schematic of this process. Ten tie wraps were used on each rib to secure the outer skin. The skin was attached to the frame in sections cut to the shape of the surface area between each rib of the frame. The panels for the ventral side of the vehicle were constructed first and

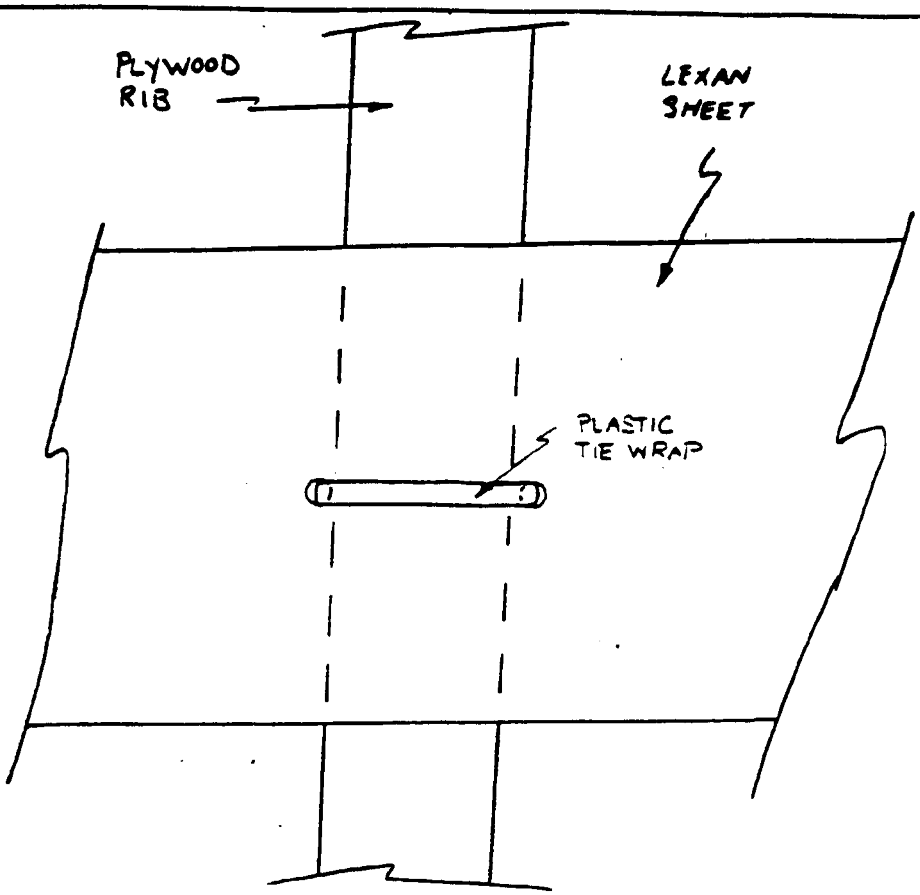

TOP VIEW

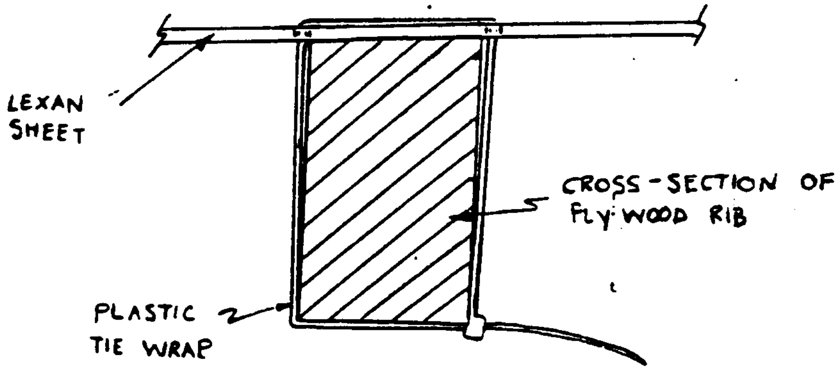

SIDE VIEW

S.P.U.D.S. : FIGURE S4
ATTACHMENT OF OUTER SKIN TO RIBBING

were then used as patterns for the dorsal surface. The panels were allowed to overlap and underwater tape was used to smooth the flow over the overlapping sheets of Lexan. Because of the slow speed of the vehicle, this is not expected to create significant drag problems. Also, since the tie wraps themselves were aligned with the flow and had a smooth surface they did not contribute appreciable drag.

RULE 10 COMPLIANCE

In accordance with Rule 10 from the H.A. Perry Foundation Submarine Race Rules, the vehicle must be painted high visiblity colors. To comply with this rule, the entire frame of the vehicle was painted flourescent orange.

FABRICATION OF NOSE BUBBLE

I. Design criteria:

1. Provide high visibility to the outside environment for the navigator
2. Ease of fabrication
3. Cost effectiveness

II. Bubble design

Originally, the nose bubble was to be fabricated by an outside vendor. This was found to be economically undesirable. Therefore, an easy fabrication method had to be employed that would produce a bubble with a 26"x 34" elliptical base and 1 ft height to fit the front rib of the vehicle.

Further research yielded a method of blowing a plastic bubble through a pattern. For this application, 1/4" Lucite acrylic was used because of its excellent thermoformability, although the material does have a low impact strength. For this reason, two bubbles were fabricated in case one shattered during testing or operation. The process used included placing the acrylic sheet between a large sheet of plywood and an elliptical pattern of the required size. A schematic of this process is shown in Figure B1.

Rubber tubing was used to prevent air from leaking out from under the acrylic sheet. The top pattern was screwed

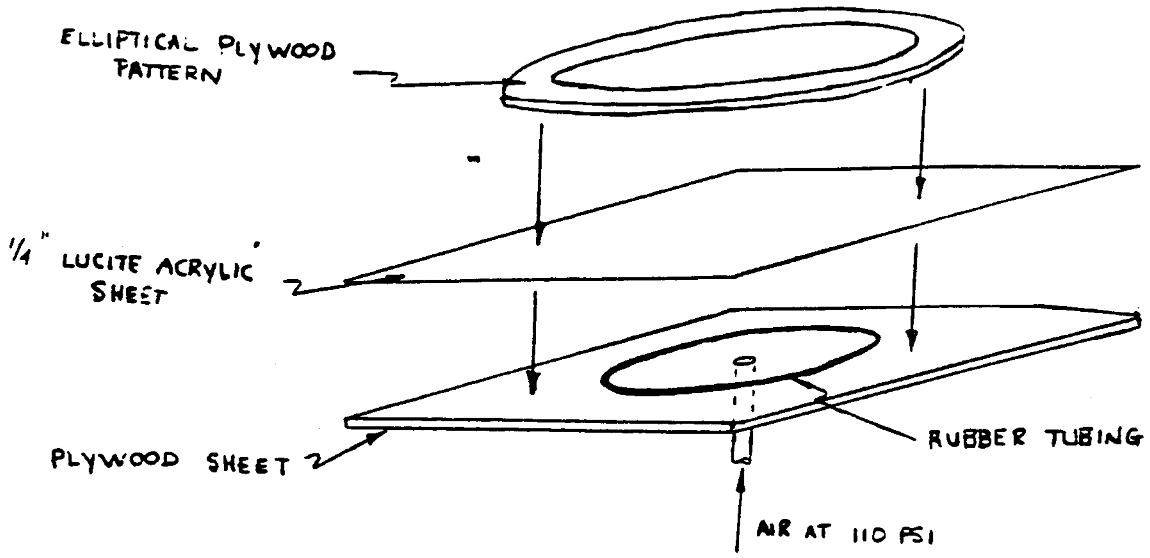

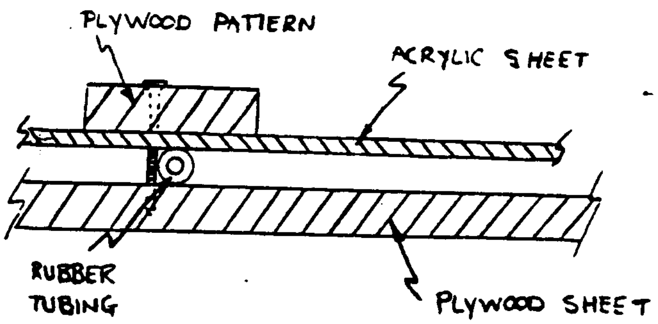

DETAIL OF PLYWOOD/ACRYLIC INTERFACE

S.P.U.D.S : FIGURE B1
SCHEMATIC OF BUBBLE
FABRICATION

into the bottom piece of plywood through the acrylic to secure the assembly. The assembly was then placed upside down in a large walk-in oven at about 325°F. The material was held at this temperature for fifteen minutes to insure consistent heating of the material. The door was opened and air at 110 psi was pumped through a small hole in the "bottom" piece of plywood. When sufficient height of the bubble was reached, the acrylic was allowed to cool. Unused material was trimmed and the bubble was fitted to the nose of the vehicle.

WEIGHT AND BALANCE CALCULATIONS

I. Design criteria (Refer to Figure W1):

1. $\Delta - W >= + 2$ lbs
2. KB > KG to provide stability during operation
3. LCB = LCG to provide a 0° trim angle

Δ = bouyancy of the vehicle

W = weight of the vehicle

KB = vertical distance from reference axis to the center of bouyancy of the vehicle

KG = vertical distance from the reference axis to the center of mass of the vehicle

LCB = logitudinal distance from the reference axis to the center of bouyancy of the vehicle

LCG = longitudinal distance from the reference axis to the center of mass of the vehicle

II. Significance

1. Can determine weight-displacement difference of the vehicle.
2. Can determine the stability of the vehicle.
3. Can determine the trim angle of the vehicle without added bouyancy or ballast.
4. Can determine the amount of added bouyancy and ballast

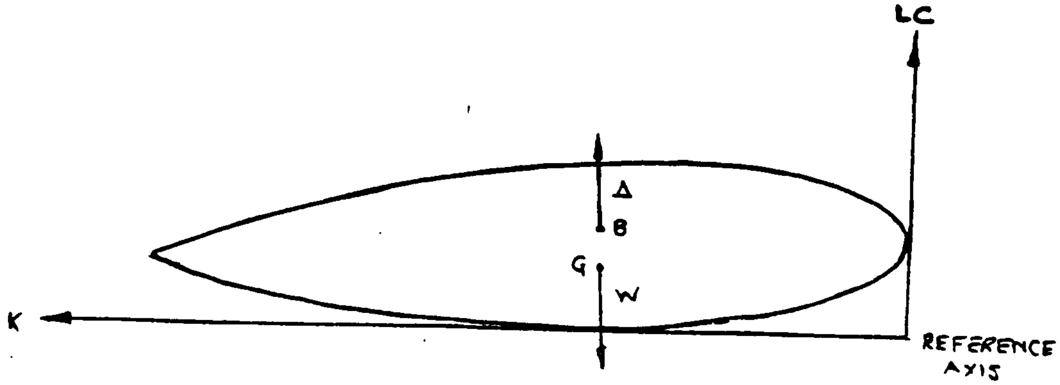

FIGURE W1 : DESIGN SPECS FOR STABILTY

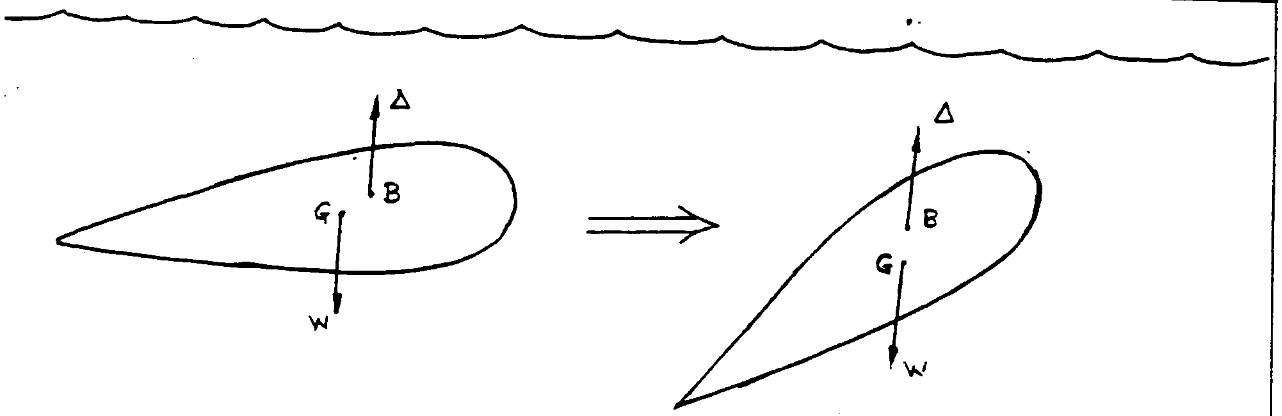

FIGURE W2 : STABILITY AND TRIM STATUS (1ST ITERATION)

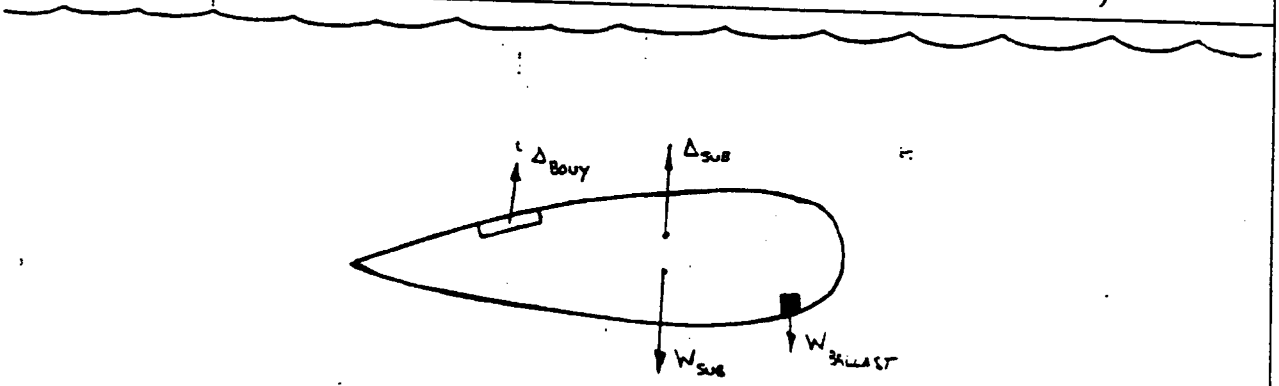

FIGURE W3: STABILITY AND TRIM STATUS WITH ADDED BALLAST AND BOUYANCY required to provide 2 lbs positive displacement and 0 trim angle.

III. Development of spreadsheet

Table W1 shows the weight/displacement center summary of the vehicle. This summary was produced from the spreadsheet found on the next page. The weight, displacement, and horizontal and vertical distances from the reference axis (Figure W1) of every constituent part of the vehicle were determined from design drawings. This information was entered into the spreadsheet systematically. The bottom of the spreadsheet shows a summation of all momments, weights, and displacements. From these summations, the vertical and horizontal centers of weight and bouyancy were calculated and also appear at the bottom of the spreadsheet:

$KB = \Sigma VM_{\Delta}/\Sigma\Delta$, $KG = \Sigma VM_{w}/\Sigma W$, $LCB = \Sigma HM_{\Delta}/\Sigma\Delta$, $LCG = \Sigma HM_{w}/\Sigma W$

First indications from the spreadsheet showed that the vehicle was negatively bouyant with a positive trim angle as shown in Figure W2. Therefore, it was concluded that bouyancy (foam) was to be added in the tail and ballast (lead) was to be added to the nose of the vehicle. This would provide the vehicle with a 0° trim angle and 2 lbs. positive displacement as shown in Figure W3. As the vehicle was constructed the spreadsheet was modified by entering actual weights, displacements and distances measured from the actual vehicle. This provided a better estimation of the trim and bouyancy

TABLE WI

WEIGHT – DISPLACEMENT – CENTER SUMMARY

CONDITION/ITEM	WEIGHT					DISPLACEMENT				
	WT LBS.	KG FT.	VERT MOM FT.LBS.	LCG FT.	LONG MOM FT.LBS.	Δ LBS	KB FT.	VERT MOM FT. LBS	LCB FT.	LONG MOM FT. LBS
COND. 1 (NO AIR OR CREW)	335.78	1.62	544.65	7.01	2352.90	304.27	1.62	494.13	6.18	1880.36
AIR IN TANKS	44.00	1.29	56.54	5.75	253.00	—	—	—	—	—
COND. 2 (NO CREW)	379.78	1.58	601.19	6.86	2605.90	304.27	1.62	494.13	6.18	1880.36
– TWO CREW	337.13	2.11	711.20	5.60	1886.57	337.13	2.11	711.20	5.60	1886.57
COND. 3	716.91	1.83	1312.39	6.27	4492.47	641.40	1.88	1205.33	5.87	3766.93
FIXED BALLAST	40.00	0.50	20.00	1.17	46.80	1.86	0.50	0.93	1.17	2.18
FIXED BUOYANCY	6.39	2.74	17.54	7.49	47.88	123.00	3.60	442.80	6.76	831.40
COND. 4 (START OF RACE)	763.30	1.77	1349.93	6.01	4587.15	766.25	2.15	1649.05	6.00	4600.50
MINUS AIR	22.00	1.29	28.27	5.75	126.50	—	—	—	—	—
COND. 5 (END OF RACE)	741.30	1.78	1321.66	6.02	4460.65	766.25	2.15	1649.05	6.00	4600.50
COND. 6 (SURFACE - NO CREW)	404.17	1.51	610.37	6.37	2574.08	429.12	2.19	937.86	6.32	2713.93

NOTE: CONDITIONS 1, 2, 3 – NO FIXED BAL/BUOY ON BOARD.

WEIGHT-DISPLACEMENT-CENTERS

VESSEL: SPUBS DATE: FALL 88 BY: UNH SHEET NO.__

ITEM	DESCRIPTION	WEIGHT	VERTICAL		LONG		DISP	VERTICAL		LONGITUDINAL	
			LVR	MOM	LVR	MOM		LVR	MOM	LVR	MOM
		(LBS)	(FT)	(FT-LB)	(FT)	(FT-LB)	(LBS)	(FT)	(FT-LB)	(FT)	(FT-LB)
	HULL										
100	NOSE CONE	7.74	2.00	15.48	2.17	16.80	6.67	2.00	13.34	2.17	0.50
110	MID SECTION	12.25	2.00	24.50	6.00	73.50	10.47	2.00	20.94	6.00	4.50
120	TAIL SECTION	14.83	2.00	29.66	11.50	170.55	13.19	2.00	26.38	11.50	9.50
	FRAME (EMT TUBING)										
200	RIB 1	5.32	2.00	10.64	1.15	6.12	10.24	2.00	20.48	1.15	11.78
205	RIB 2	6.08	2.00	12.16	3.42	20.79	5.12	2.00	10.24	3.42	17.51
210	RIB 3	3.04	1.30	3.95	5.42	16.48	5.12	1.30	6.66	5.42	27.75
215	RIB 4	3.04	1.30	3.95	6.75	20.52	10.24	1.30	13.31	6.75	69.12
220	RIB 5	6.08	2.00	12.16	8.75	53.20	6.27	2.00	12.54	8.75	54.86
225	RIB 6	3.73	2.00	7.46	10.75	40.10	4.74	2.00	9.48	10.75	50.96
230	RIB 7	2.81	2.00	5.62	12.75	35.83	4.74	2.00	9.48	12.75	60.44
235	MEMBER 1	1.00	3.67	3.67	2.33	2.33	0.72	3.67	2.64	2.33	1.68
240	MEMBER 2	1.00	1.88	1.88	2.33	2.33	0.72	1.88	1.35	2.33	1.68
245	MEMBER 3	1.00	1.88	1.88	2.33	2.33	0.72	1.88	1.35	2.33	1.68
250	MRMBER 4	1.00	0.50	0.50	2.33	2.33	0.72	0.50	0.36	2.33	1.68
255	MEMBER 5	1.99	2.00	3.98	6.33	12.60	1.42	2.00	2.84	6.33	8.99
260	MEMBER 6	1.99	1.83	3.64	6.33	12.60	1.42	1.83	2.60	6.33	8.99
265	MEMBER 7	1.99	1.83	3.64	6.33	12.60	1.42	1.83	2.60	6.33	8.99
270	MEMBER 8	2.34	2.96	6.93	11.83	27.68	6.84	2.96	20.25	11.83	80.92
280	MEMBER 9	2.34	1.83	4.28	11.83	27.68	1.67	1.83	3.06	11.83	19.76
290	MEMBER 10	2.34	1.83	4.28	11.83	27.68	1.67	1.83	3.06	11.83	19.76
300	MEMBER 11	2.34	0.96	2.25	11.83	27.68	1.67	0.96	1.60	11.83	19.76
	DRIVE TRAIN										
400	PEDALS,DRIVE GEAR,	0.00	0.00	0.00	0.00	0.00	0.00	0.00	0.00	0.00	0.00
	AND BEARING	4.13	2.13	8.79	6.31	26.03	1.38	2.13	2.94	6.31	8.71
420	SHAFT SPROCKET	0.25	1.92	0.48	7.92	1.98	0.08	1.92	0.15	7.92	0.63
425	MITRE GEAR 1	1.50	1.92	2.88	7.92	11.88	0.50	1.92	0.96	7.92	3.96
430	MITRE GEAR 2	1.50	1.92	2.88	8.04	12.06	0.50	1.92	0.96	8.04	4.02
440	BEARING 1	1.75	1.83	3.20	7.92	13.86	0.58	1.83	1.06	7.92	4.59
450	BEARING 2	1.75	1.83	3.20	7.92	13.86	0.58	1.83	1.06	7.92	4.59
500	BEARING 3	1.75	1.83	3.20	8.18	14.32	0.58	1.83	1.06	8.18	4.74
510	MOUNTING PLATE	2.30	1.67	3.84	8.09	18.61	0.77	1.67	1.29	8.09	6.23
515	DRIVE SHAFT	4.89	2.00	9.78	13.06	63.86	1.63	2.00	3.26	13.06	21.32
520	THRUST BEARING	2.45	2.00	4.90	14.42	35.33	0.82	2.00	1.64	14.42	11.82
	BEARING PLATE	1.43	2.00	2.86	14.42	20.62	0.48	2.00	0.96	14.42	6.92
	UNIVERSAL JOINT	3.52	2.00	7.04	14.42	50.76	1.18	2.00	2.36	14.42	17.02
	SHROUD										
600	PROPELLER	3.00	2.00	6.00	15.63	46.89	5.00	2.00	10.00	15.63	78.15
700	SHROUD	1.41	2.00	2.82	15.54	21.91	0.60	2.00	1.20	15.54	9.32
705	SPACER 1	0.52	2.00	1.04	15.67	8.15	0.17	2.00	0.34	15.67	2.66
710	SPACER 2	0.52	2.00	1.04	15.42	8.02	0.17	2.00	0.34	15.42	2.62
715	BEARING	0.23	2.00	0.46	15.17	3.49	0.12	2.00	0.24	15.17	1.82
720	SUPPORTS	0.64	2.00	1.28	15.17	9.71	0.61	2.00	1.22	15.17	9.25
725	STABILITY SUPPORT	0.67	2.00	1.34	14.50	9.72	0.64	2.00	1.29	14.50	9.28

```
     !                        !                                       !
     !SEAT                    !                                       !
800  !     FRONT              !  2.33   1.10   2.56   2.50    5.83  !  3.93   1.10   4.32   2.50    9.83
810  !     BACK               !  7.75   1.60  12.40   7.75   60.06  !  3.89   1.60   6.22   7.75   30.15
     !                        !                                       !
     !TRIM CONTROLS           !                                       !
900  !     DIVE PLANE 1       !  5.69   2.21  12.57  10.42   59.29  !  6.35   2.21  14.03  10.42   66.17
905  !     DIVE PLANE 2       !  5.82   2.21  12.86  10.42   60.64  !  6.49   2.21  14.34  10.42   67.63
910  !     CONNECTING ROD     !  1.54   2.21   3.40  10.42   16.05  !  0.80   2.21   1.77  10.42    8.34
915  !     ROD PULLEY         !  0.15   2.21   0.33  10.42    1.56  !  0.25   2.21   0.55  10.42    2.61
940  !     LARGE PULLEY 1     !  0.19   1.83   0.35   8.75    1.66  !  0.09   1.83   0.16   8.75    0.79
945  !     LARGE PULLEY 2     !  0.19   1.83   0.35   8.88    1.69  !  0.09   1.83   0.16   8.88    0.80
950  !     CONTROL CABLE      !  0.20   1.83   0.37   5.67    1.13  !  0.07   1.83   0.13   5.67    0.40
     !     CONTROL STICK      !  0.66   1.54   1.02   3.42    2.26  !  0.47   1.54   0.72   3.42    1.61
     !                        !                                       !
     !STEERING CONTROLS       !                                       !
1000 !     PLANE 1            !  0.78   3.10   2.42  14.42   11.25  !  0.67   3.10   2.08  14.42    9.66
1010 !     PLANE 2            !  0.78   1.20   0.94  14.42   11.25  !  0.67   1.20   0.80  14.42    9.66
1020 !     LARGE PULLEY 1     !  0.19   1.83   0.35   8.75    1.66  !  0.09   1.83   0.16   8.75    0.79
1030 !     LARGE PULLEY 2     !  0.19   1.83   0.35   8.88    1.69  !  0.09   1.83   0.16   8.88    0.80
1040 !     SMALL PULLEY       !  0.21   1.83   0.38  10.35    2.17  !  0.10   1.83   0.18  10.35    1.04
1050 !     CONTROL CABLE      !  0.20   1.83   0.37   5.67    1.13  !  0.07   1.83   0.13   5.67    0.40
1060 !     CONTROL STICK      !  0.66   1.54   1.02   3.42    2.26  !  0.47   1.54   0.72   3.42    1.61
     !                        !                                       !
     !SAFETY SYSTEM           !                                       !
1100 !     STROBE LIGHT       !  1.20   3.52   4.22   8.67   10.40  !  1.20   3.52   4.22   8.67   10.40
1110 !     EMERGENCY BEACON   !  4.00   4.31  17.24   9.34   37.36  !  3.70   4.31  15.95   9.34   34.56
     !                        !                                       !
1200 !TOW HOOK 1              !  0.75   2.00   1.50   1.50    1.13  !  0.25   2.00   0.50   1.50    0.38
1210 !TOW HOOK 2              !  0.75   2.00   1.50   1.50    1.13  !  0.25   2.00   0.50   1.50    0.38
1220 !TOW HOOK 3              !  1.50   3.50   5.25   9.50   14.25  !  0.50   3.50   1.75   9.50    4.75
     !                        !                                       !
     !LIFE SUPPORT SYSTEM     !                                       !
1300 !     TANK 1             ! 22.70   0.88  19.98   5.75  130.53  ! 20.20   0.88  17.78   5.75  116.15
1310 !     TANK 2             ! 22.70   0.88  19.98   5.75  130.53  ! 20.20   0.88  17.78   5.75  116.15
1320 !     TANK 3             ! 22.70   1.17  26.56   5.75  130.53  ! 20.20   1.17  23.63   5.75  116.15
1330 !     TANK 4             ! 22.70   1.17  26.56   5.75  130.53  ! 20.20   1.17  23.63   5.75  116.15
1340 !     TANK 5             ! 22.70   1.46  33.14   5.75  130.53  ! 20.20   1.46  29.49   5.75  116.15
1350 !     TANK 6             ! 22.70   1.46  33.14   5.75  130.53  ! 20.20   1.46  29.49   5.75  116.15
1360 !     TANK 7             ! 22.70   1.63  37.00   5.75  130.53  ! 20.20   1.63  32.93   5.75  116.15
1370 !     TANK 8             ! 22.70   1.63  37.00   5.75  130.53  ! 20.20   1.63  32.93   5.75  116.15
     !                        !                                       !
     !                        !                                       !
     !SUB WITHOUT DIVERS      ! 335.78  1.62 544.65   7.01 2352.90  ! 304.27  1.62 494.13   6.18 1880.36
     !                        !                                       !
     !                        !                                       !
     !DIVER 1                 !                                       !
     !     HEAD,NECK,TRUNK    ! 97.70   2.45 239.37   3.48  340.00  ! 97.70   2.45 239.37   3.48  340.00
     !     UPPER ARM          !  9.64   2.40  23.14   3.25   31.33  !  9.64   2.40  23.14   3.25   31.33
     !     FOREARM            !  5.50   1.70   9.35   3.01   16.56  !  5.50   1.70   9.35   3.01   16.56
     !     HAND               !  2.06   1.40   2.88   2.18    4.49  !  2.06   1.40   2.88   2.18    4.49
     !     UPPER LEG          ! 33.36   1.00  33.36   3.58  119.43  ! 33.36   1.00  33.36   3.58  119.43
     !     LOWER LEG          ! 15.48   0.45   6.97   3.83   59.29  ! 15.48   0.45   6.97   3.83   59.29
     !     FOOT               !  4.82   0.30   1.45   4.58   22.08  !  4.82   0.30   1.45   4.58   22.08
     !                        !                                       !
     !DIVER 2                 !                                       !
```

```
!     HEAD,NECK,TRUNK      !  97.70   2.40  234.48   7.02  685.85 !  97.70   2.40  234.48   7.02  685.85
!     UPPER ARM            !   9.64   2.30   22.17   6.92   66.71 !   9.64   2.30   22.17   6.92   66.71
!     FOREARM              !   5.50   2.40   13.20   7.42   40.81 !   5.50   2.40   13.20   7.42   40.81
!     HAND                 !   2.06   2.85    5.87   8.44   17.39 !   2.06   2.85    5.87   8.44   17.39
!     UPPER LEG            !  33.36   2.00   66.72   8.54  284.89 !  33.36   2.00   66.72   8.54  284.89
!     LOWER LEG            !  15.48   2.55   39.47   9.53  147.52 !  15.48   2.55   39.47   9.53  147.52
!     FOOT                 !   4.82   2.65   12.77  10.42   50.22 !   4.82   2.65   12.77  10.42   50.22
!                          !                                      !
!                          !                                      !
!SUB WITH DIVERS           ! 672.91   1.87 1255.85   6.30 4239.47 ! 641.39   1.88 1205.32   5.87 3766.92
!                          !                                      !
!                          !                                      !
!AIR IN TANKS              !                                      !
!     TANK 1               !   5.50   0.88    4.84   5.75   31.63 !   0.00   0.88    0.00   5.75    0.00
!     TANK 2               !   5.50   0.88    4.84   5.75   31.63 !   0.00   0.88    0.00   5.75    0.00
!     TANK 3               !   5.50   1.17    6.44   5.75   31.63 !   0.00   1.17    0.00   5.75    0.00
!     TANK 4               !   5.50   1.17    6.44   5.75   31.63 !   0.00   1.17    0.00   5.75    0.00
!     TANK 5               !   5.50   1.46    8.03   5.75   31.63 !   0.00   1.46    0.00   5.75    0.00
!     TANK 6               !   5.50   1.46    8.03   5.75   31.63 !   0.00   1.46    0.00   5.75    0.00
!     TANK 7               !   5.50   1.63    8.97   5.75   31.63 !   0.00   1.63    0.00   5.75    0.00
!     TANK 8               !   5.50   1.63    8.97   5.75   31.63 !   0.00   1.63    0.00   5.75    0.00
!                          !                                      !
!                          !                                      !
!SUB,DIVERS.AND AIR        ! 716.91   1.83 1312.39   6.27 4492.47 ! 641.39   1.88 1205.32   5.87 3766.92
!                          !                                      !
!                          !                                      !
!FIXED BOUYANCY            !                                      !
!     TAIL                 !   0.56   3.60    2.02  10.67    5.98 !  20.00   3.60   72.00  10.67  213.40
!     MID SECTION          !   2.60   3.60    9.36   6.00   15.60 ! 103.00   3.60  370.80   6.00  618.00
!     MEMBER 1             !   0.17   3.67    0.62   2.33    0.40 !   0.00   3.67    0.00   2.33    0.00
!     MEMBER 2             !   0.17   1.88    0.32   2.33    0.40 !   0.00   1.88    0.00   2.33    0.00
!     MEMBER 3             !   0.17   1.88    0.32   2.33    0.40 !   0.00   1.88    0.00   2.33    0.00
!     MEMBER 4             !   0.17   0.50    0.09   2.33    0.40 !   0.00   0.50    0.00   2.33    0.00
!     MEMBER 5             !   0.33   2.00    0.66   6.33    2.09 !   0.00   2.00    0.00   6.33    0.00
!     MEMBER 6             !   0.33   1.83    0.60   6.33    2.09 !   0.00   1.83    0.00   6.33    0.00
!     MEMBER 7             !   0.33   1.83    0.60   6.33    2.09 !   0.00   1.83    0.00   6.33    0.00
!     MEMBER 8             !   0.39   2.96    1.15  11.83    4.61 !   0.00   2.96    0.00  11.83    0.00
!     MEMBER 9             !   0.39   1.83    0.71  11.83    4.61 !   0.00   1.83    0.00  11.83    0.00
!     MEMBER 10            !   0.39   1.83    0.71  11.83    4.61 !   0.00   1.83    0.00  11.83    0.00
!     MEMBER 11            !   0.39   0.96    0.37  11.83    4.61 !   0.00   0.96    0.00  11.83    0.00
!FIXED BALLAST             !                                      !
!     NOSE                 !  40.00   0.50   20.00   1.17   46.80 !   1.86   0.50    0.93   1.17    2.18
!                          !                                      !
!SUBMERGED CONDITION       ! 763.30   1.77 1349.93   6.01 4587.15 ! 766.25   2.15 1649.05   6.00 4600.50
!                          !                                      !
!DISPLACEMENT - WEIGHT     !   2.96                               !
!        KB - KG           !   0.35                               !
!        LCB - LCG         !  -0.01                               !
```

status of the vehicle before testing. This final estimation is reflected in the weight/dispacement center summary and spreadsheet.

EMERGENCY ESCAPE SYSTEM

The emergency escape system consists of a detachable canopy that covers the entire midship section of the vehicle and opens in a clam shell fashion. The attached sheets show the canopy system in both open and closed positions. The support members are composed of foam filled EMT, the support ribs are made out of 3/4 inch plywood, and the canopy itself, like the outer shell of the rest of the vehicle, consists of 1/16 inch Lexan attached to the canopy support ribs.

The function of the 1 1/2 inch gap extending the length of the canopy is two fold. It allows safety divers to open the canopy from outside the vehicle and also allows expended diver air to escape to the environment.

The two halves of the canopy are held in the closed position using a male-female tab system as shown in the front view of the first attached sheet. By simply pushing on a support member or rib from inside the vehicle the canopy can be opened easily by navigator or propulsor. The natural bouyancy of the support ribs and foam filled members will aid in opening the canopy once the tabs are released.

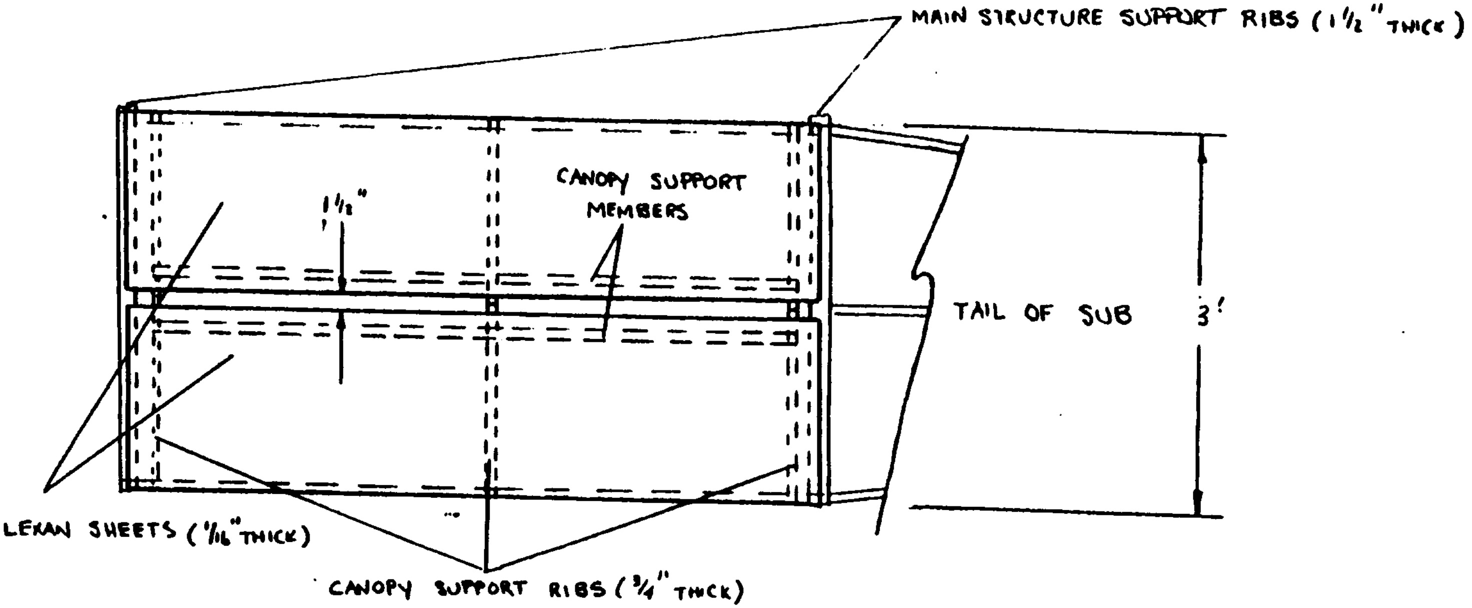

TOP VIEW (CLOSED)

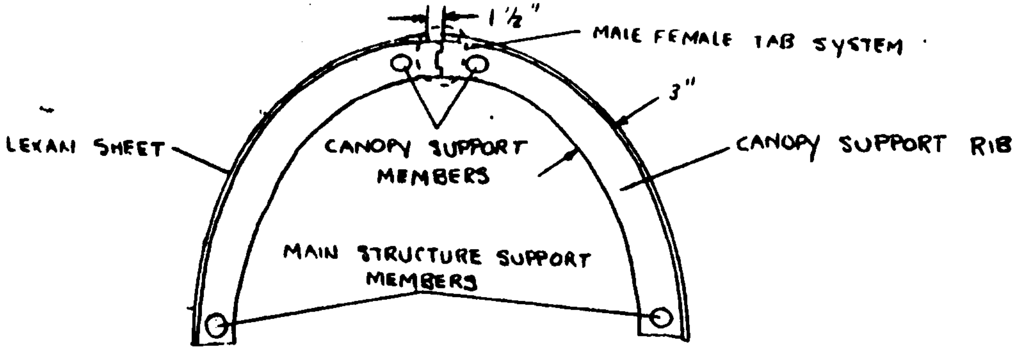

FRONT VIEW (CLOSED)

EMERGENCY ESCAPE CANOPY
SYSTEM (CANOPY CLOSED)

UNIV. OF NEW HAMPSHIRE
NO. 1 OF 2

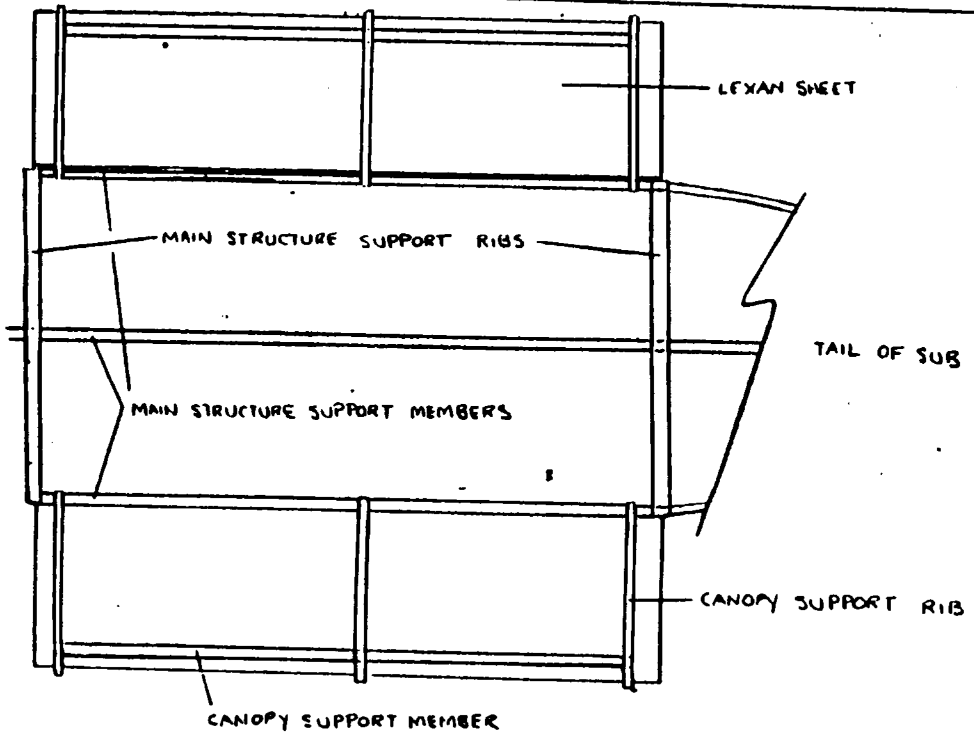

TOP VIEW -(OPEN)

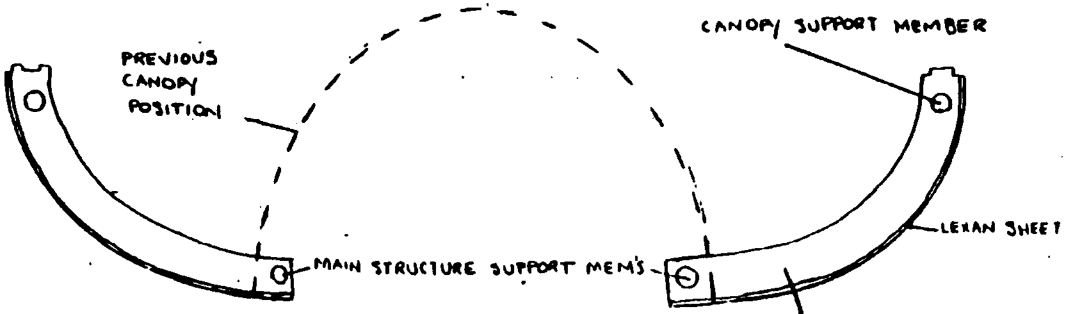

FRONT VIEW (OPEN)

EMERGENCY ESCAPE CANOPY
SYSTEM (CANOPY OPEN)

UNIV. OF NEW HAMPSHIRE
NO. 2 OF 2

HUMAN FACTORS ENGINEERING

I. DESIGN CRITERIA

1. Two person operation - one person provides propulsion - one person provides navigation, steering and safety.
2. Vehicle must operate entirely beneath the surface of the water at a maximum depth of seven meters.
3. All propulsion must be human powered - no stored energy.
4. Vehicle is to be free flooded - primary and back-up SCUBA (Self-Contained Underwater Breathing Apparatus) are required.
5. On board air supply must be at least 150% of that necessary to propel the occupants and vehicle through a one kilometer distance at a depth of seven meters.
6. Automatic ascend deadman switch is required for both occupants.
7. Personal restraint systems must be single point, quick release.

II. PRIMARY LIFE SUPPORT

The primary life support system for the University of New Hampshire's submersible vehicle (see Figure 1) consists of eight Scubapro cylinders, seven of which are fitted with scuba filler yokes. The yokes are connected by quarter inch diameter high pressure hose. The eighth cylinder is fitted with a Scubapro Mark 10 first stage regulator. The high pressure hose provides a high pressure supply to the first stage regulator and two quarter inch diameter low pressure hoses exit the first stage regulator and terminate on two Scubapro D-300 second stage regulators.

The specifications for the cylinders are as follows:

Number 16-037-000 "Slim-Tank" 60.6 cubic feet tank

1.	volume	60.6 cubic feet at 3300 psi
2.	length	22.00±.20 inches without valve
3.	diameter(outside)	6.00±.05 inches
4.	weight(nominal)	22.7 pounds without valve
5.	material	4130X heat treated steel
6.	working pressure	3000 psig +10%
7.	coating(external)	D.O.T. standards
8.	coating(internal)	hot dip galvanized
9.	bouyancy(calculated nominal with valve in seawater)	-8.1 pounds full(+10%) -2.5 pounds empty
10.	D.O.T. 3AA approval	

The 60.6 cubic feet cylinder was selected because it had the best nominal bouyancy and dead weight in comparison to other commercially available cylinders. An added feature was that it had a shorter length and smaller diameter than other commercially available cylinders.

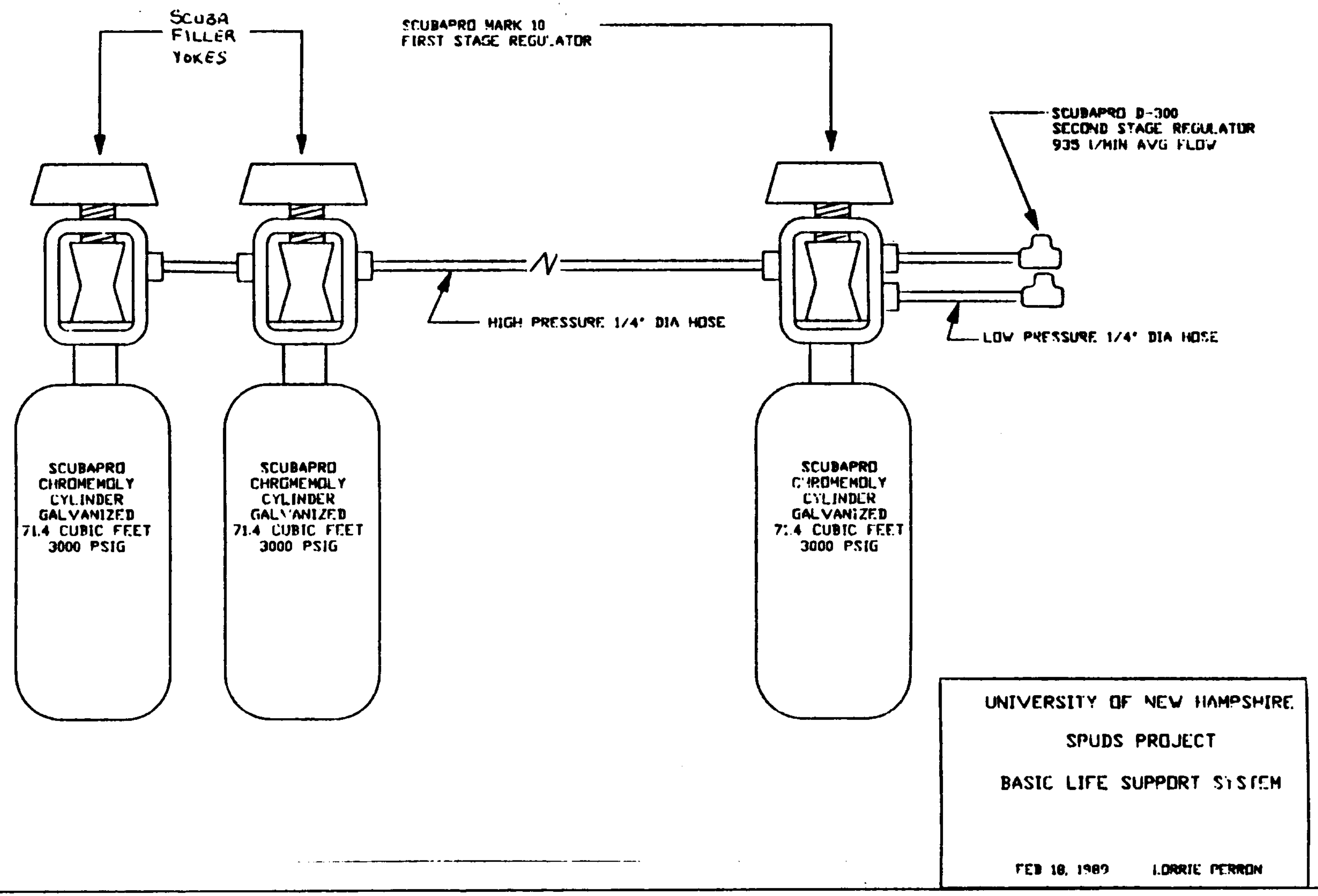

Figure 1. Primary life support system.

The scuba filler yokes are high pressure devices which allow the cylinders to be harnessed together. If a seal on any one of the cylinders were to fail the yoke on that cylinder could be closed to isolate the air loss to only that cylinder, maintaining the integrity of the remaining system.

The yokes are connected by soft quarter inch diameter high pressure hose. The soft (ie.rubber) hose, as opposed to hard (ie.metal) hose, allows for greater flexibility in installation. Should an unexpected shift in cylinder position be experienced, the soft hose connections would "give" to allow for the continued integrity of the primary air supply. The low pressure hoses from the first stage regulator to the second stage regulators are also soft hoses.

To convert the high pressure air to low pressure "breatheable" air a first stage regulator is installed on the last of the series connected cylinders. This is the weakest link in the system since if this regulator were to fail the entire primary air supply would be lost. A Scubapro Mark 10 first stage regulator was selected. The Mark 10 (see Figure 2) is considered by many to be the ultimate first stage regulator. It offers exceptional pressure and flow stabilization. It delivers air to the second stage regulator at an average pressure differential of only 12 psi and an average flow rate variance of only 7 cubic feet per minute

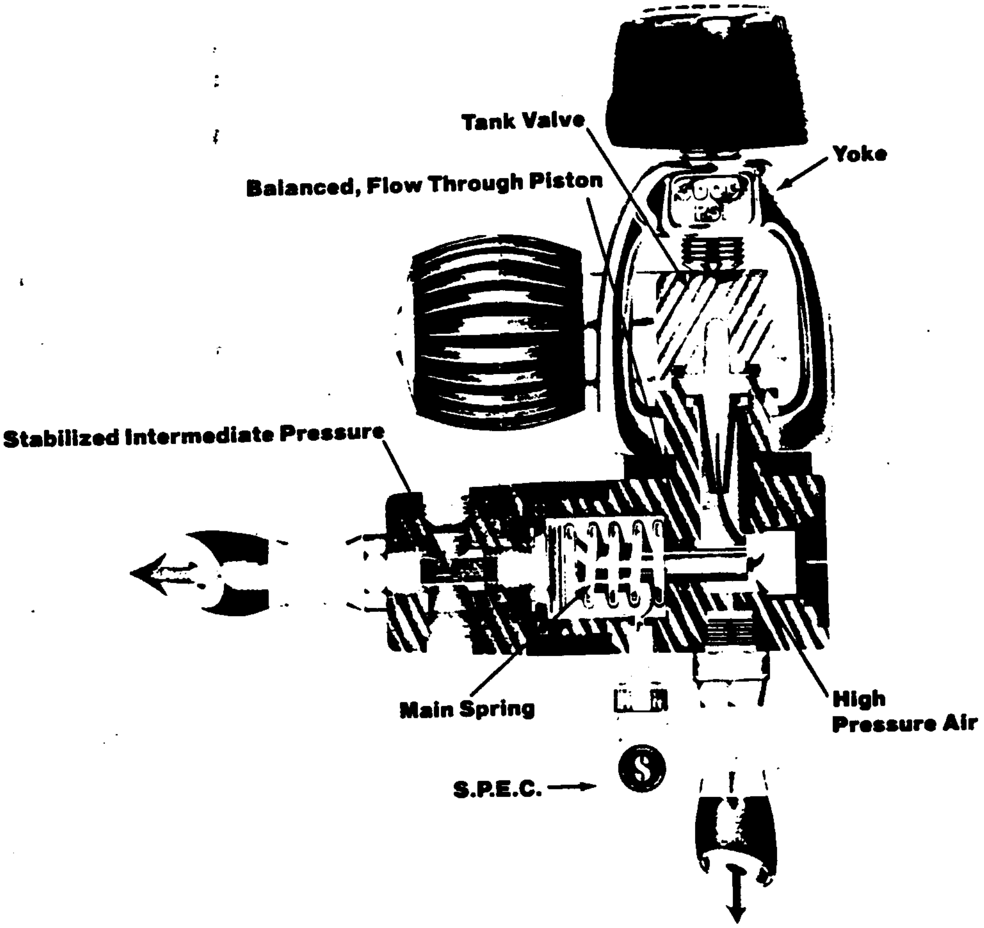

MK 10 FIRST STAGE SPECIFICATIONS

Materials:
Body — *Brass, Chrome-plated*
Yoke — *Forged Brass (3300 psig)*
Seat — *Solid Teflon*
Piston — *Stainless Steel*
Spring — *Stainless Steel*

Number of High Pressure Ports	Two
Number of Low Pressure Ports	Five
Weight	31 ounces (879 grams)
Piston Design	Pneumatically Balanced, Flow Through
Protection Cap	Rubber, Reversible
S.P.E.C.	Yes, Standard
Intermediate Pressure at 3300 psig	125-145 psig
Intermediate Pressure at 300 psig	125-145 psig
Flow at 2000 psig	80 SCFM (2265 liters per minute)
Flow at 300 psig	73 SCFM (2067 liters per minute)
Warranty	Limited Lifetime

Mk 10 First Stage S.P.E.C. Regulator
No. 10-500-000 $152.00

Figure 2. Scubapro Mark 10 first stage regulator and specifications.

regardless of cylinder pressure (3000 psi to 300 psi). It has a pneumatically balanced flow through piston design, which means that air coming from the cylinder surrounds the piston stem but does not directly affect its movement. The pressure at which piston reseating takes place is a function only of the main spring, thus giving exceptional pressure stability.

Preliminary testing conducted by the BET students in the spring of 1988 predicted a maximum average air flow requirement for the propulsor of 100 liters per minute. If a standard demand second stage regulator were used at this inhalation level, the diver demands would exceed regulator capacity and the diver would be gasping for air. If a free flow second stage regulator were used, there would be a constant flow of air that was not being utilized. This would require a larger than necessary on board air supply, plus more weight and more volume. The Scubapro D-300 second stage regulator was selected (see Figure 3). It offers a pneumatically balanced demand valve with down stream override. Pneumatic air balancing means that the poppet movement is not directly affected by the force of the incoming air. The incoming air pushes both up and down on the poppet creating opposing forces which cancel each other out. The only force present then to oppose inhalation is the force from the main spring which can now be made lighter because there are no air forces, and inhalation resistance becomes even less. Down stream override refers to the fact that the poppet housing is

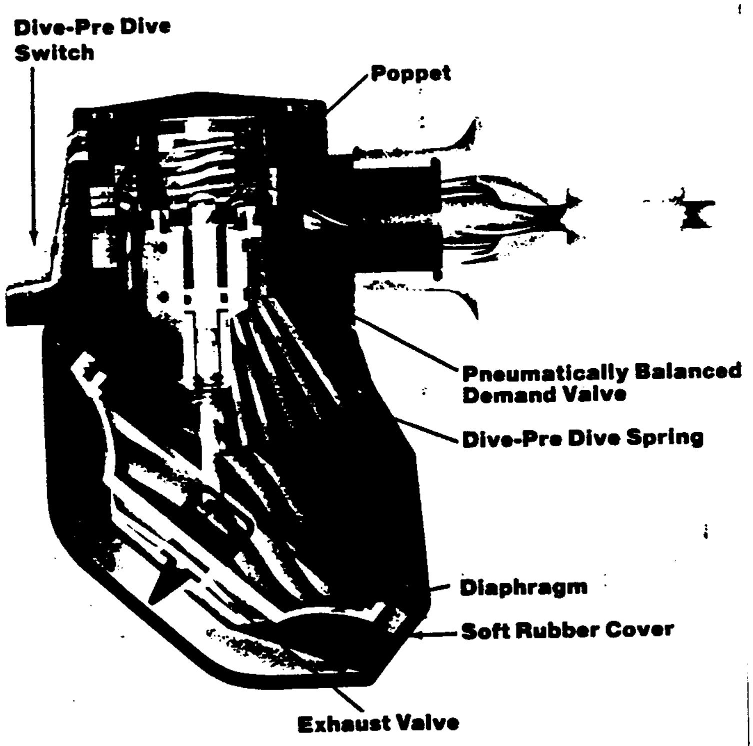

D300 SPECIFICATIONS

Materials:
Case — *Fiberglass Reinforced Polyester*
Diaphragm — *Silicone*
Exhaust Valve — *Silicone*
Seat — *Neoprene*
Springs (2) — *Stainless Steel*
Mouthpiece — *Black Silicone, Contoured*

Demand Valve Design	Pneumatically Balanced Coaxial Flow
Weight without hoses	7.76 ounces (220 grams)
Average Flow	33 SCFM (935 liters per minute)
Maximum Intermediate Pressure	150 psig
Average (Surface) Inhalation Resistance	0.8
Average (Surface) Exhalation Resistance	0.5
V.I.V.A. Effect	Dealer Adjustable
Hose Length (Standard)	32 inches
Hose Length (Octopus)	32 inches
Warranty	Limited Lifetime

Scubapro D300 Second Stage
No. 11-011-000 $263.00

Figure 3. Scubapro D-300 second stage regulator and specifications.

machined with a taper to it so that if the pneumatic balancing is upset by a pressure overload from the first stage it will be mechanically stopped from over loading.

III. EMERGENCY LIFE SUPPORT

Each member's emergency life support system consists of a Scubapro personal buoyancy vest (see Figure 4) with front mount 16 gram CO2 cartridge and a Scubapro 15 cubic feet pony bottle with regulator. The personal bouyancy vest provides instant bouyancy control in the event of an emergency. In addition to the CO2 automatic pull cartridge fill there is a "pull and blow" mouthpiece on the left lapel. The mouthpiece also doubles as a low volume pressure release valve. The 16 gram CO2 cartridge provides 10 pounds of instant flotation. The vest itself is high visibility orange.

IV. DIVER ERGONOMICS AND PHYSIOLOGY

Preliminary work done in the spring of 1988 by the BET students produced a training frame for propulsor position optimization studies (see Figure 5a). The position shown, a recumbent position with hip angle equal to 15 degrees, was determined by experiment to be optimum for diver comfort and

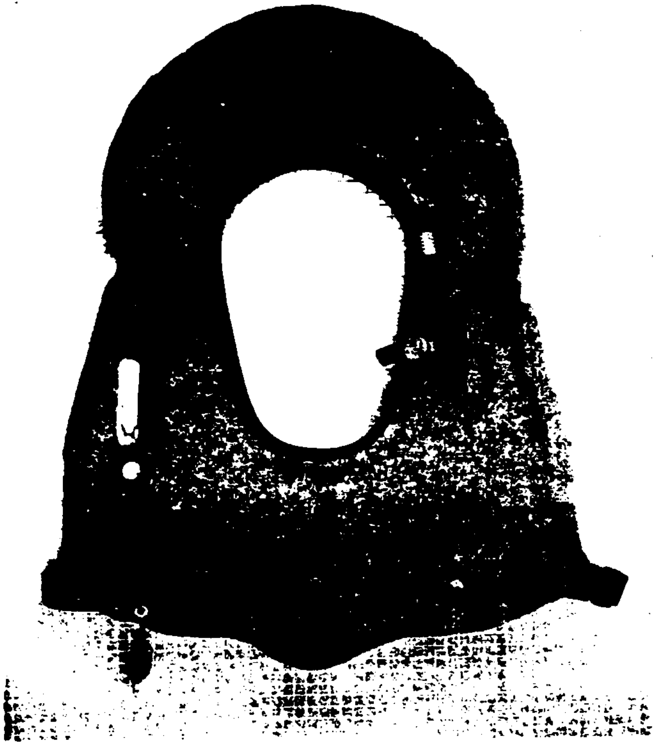

Figure 4. Scubapro personal bouyancy vest.

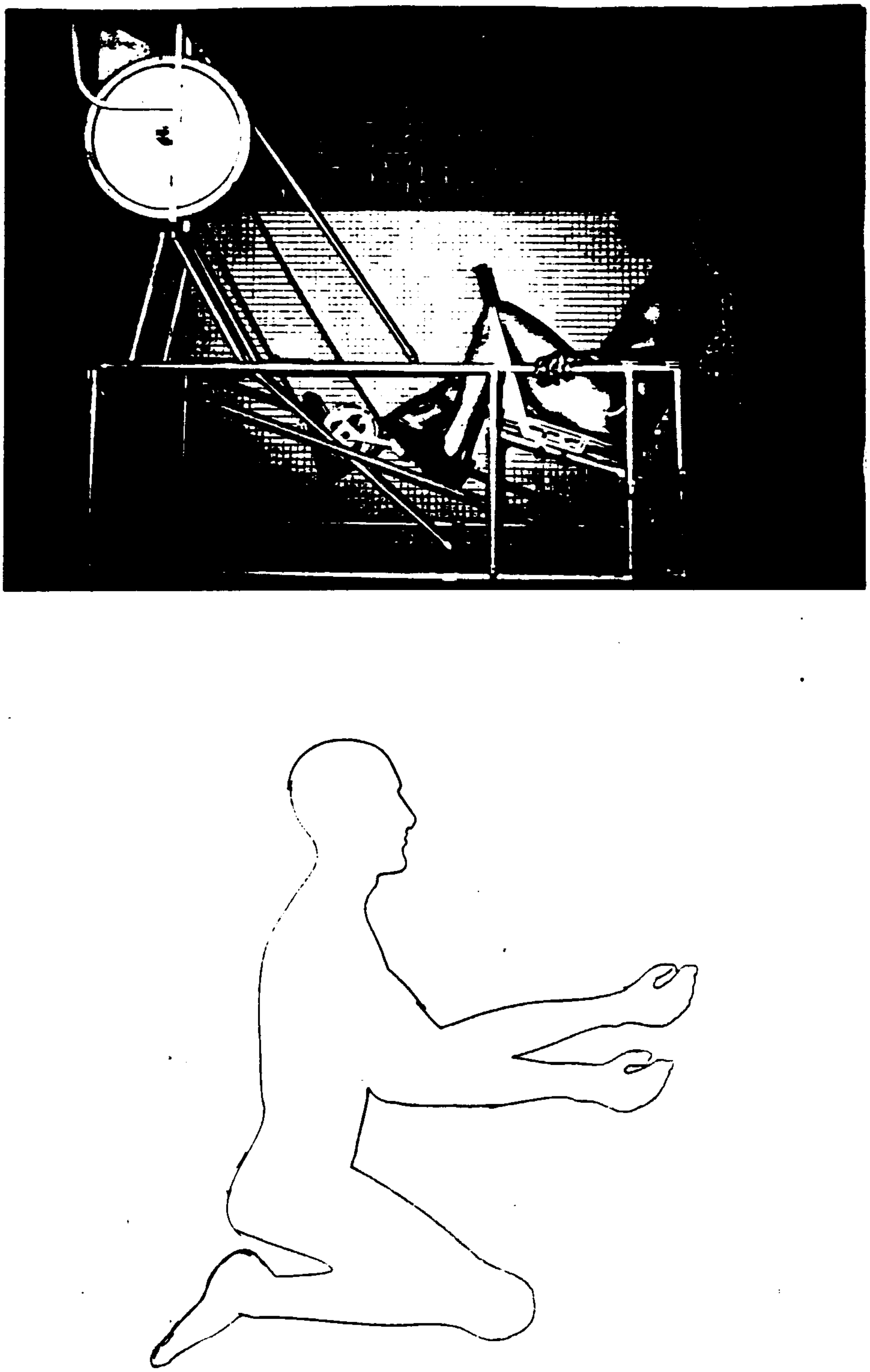

Figure 5a. Training frame for populsor position optimization study
5b. Navigator position.

maximum work output. This exact position was duplicated in the actual submersible vehicle utilizing the frame works from a front bucket seat of a small foreign import car. Navigator position (see Figure 5b) is not optimum for comfort (although in a bouyant state underwater it is not uncomfortable) but was a design trade off for space minimization.

Given a predicted speed of one to five knots for the vehicle and knowledge of the dimensions of the race course, it was determined that the propulsor would be producing muscular power aerobically. Maintaining constant vehicle speed would require high muscular torques. From these estimates it was determined that the diver training program would include both a strength and an endurance component.

Propulsors were placed on a weight lifting program consisting of three sessions per week. The specific muscle groups trained were the knee extensors (quadriceps) and hip extensors. For each muscle group, the propulsors did three sets of eight repetitions, starting at a weight equal to 65% of their maximal lifting capacity. Weight amounts were upwardl adjusted as strength gain occured. Propulsors were also placed on a weight training program consisting of twelve weeks of ergometer exercise three to four times per week for thirty to forty minutes per session. The intensity level was set at 70-80% of their predetermined maximal aerobic capacity.

V. DEADMAN SWITCH

Safety regulations require a deadman switch to be utilized by both divers. Release of the switch causes the launching of a strobe light to the surface as a distress signal. Figures 6 and 7 show the design and construction of the controlling circuit. The control circuit is located by the navigator, and each diver has their own release mechanism (a bicycle brake type assembly). The divers maintain pressure on the brake handle which in turn holds a reed switch open with a magnet mounted on the brake handle. Release of the handle removes the magnetic field and grounds that branch of the circuit, which releases the strobe.

Since it is conceivable that the divers might need the use of both of their hands for short periods of time, a delay of fifteen seconds is built into the circuit. Release of the handle by either diver lights a yellow LED on the control circuit at their hand and also on the navigators control panel. It also initiates the time delay. If the handle is not grasped within the time delay interval the strobe is launched and a red LED lights up on the navigators control panel. If the handle is grasped within the time delay interval the entire circuit is reset and yellow LED's at the divers hands and on the navigators control panel are turned off.

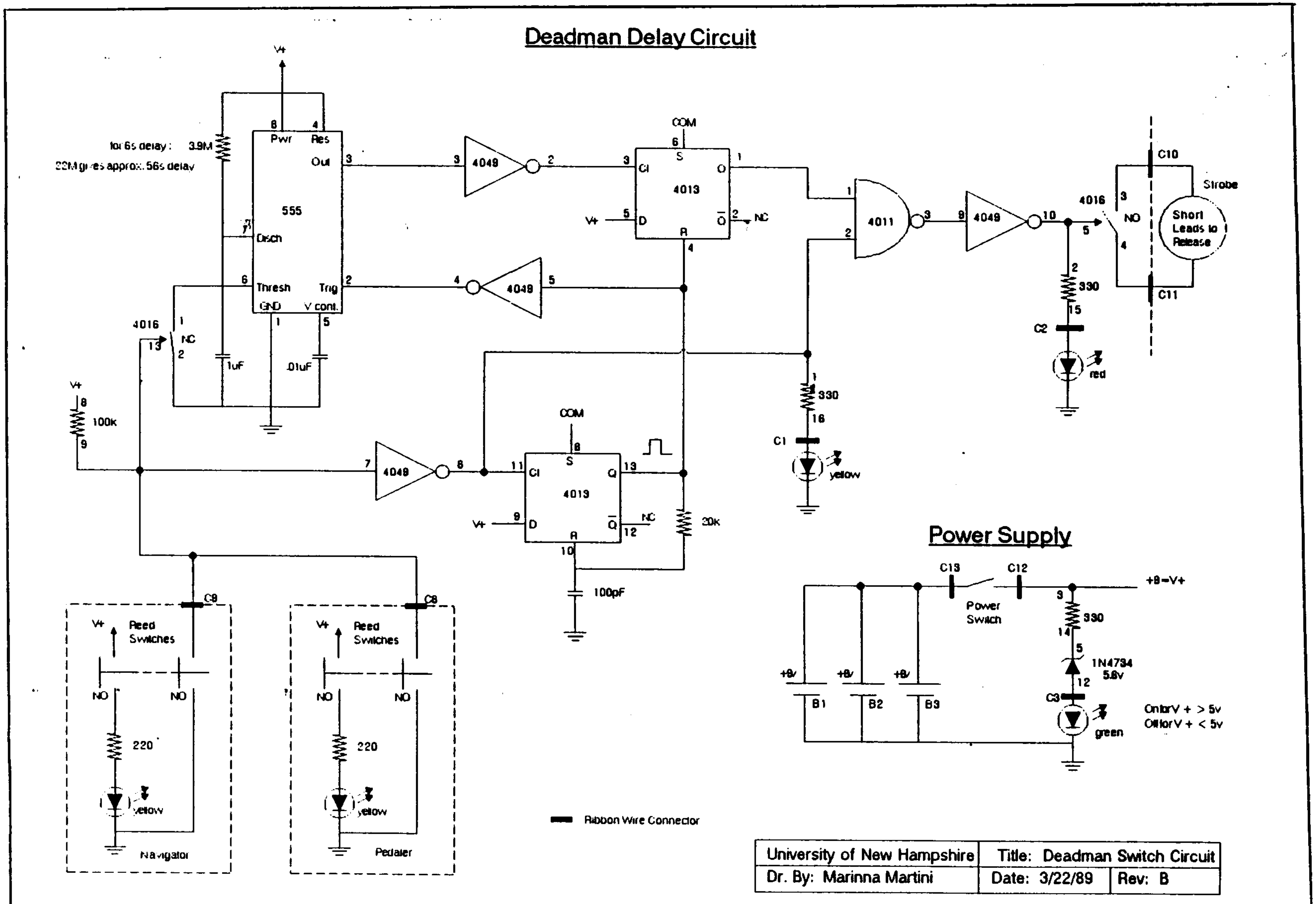

Figure 6. Deadman switch control circuit.

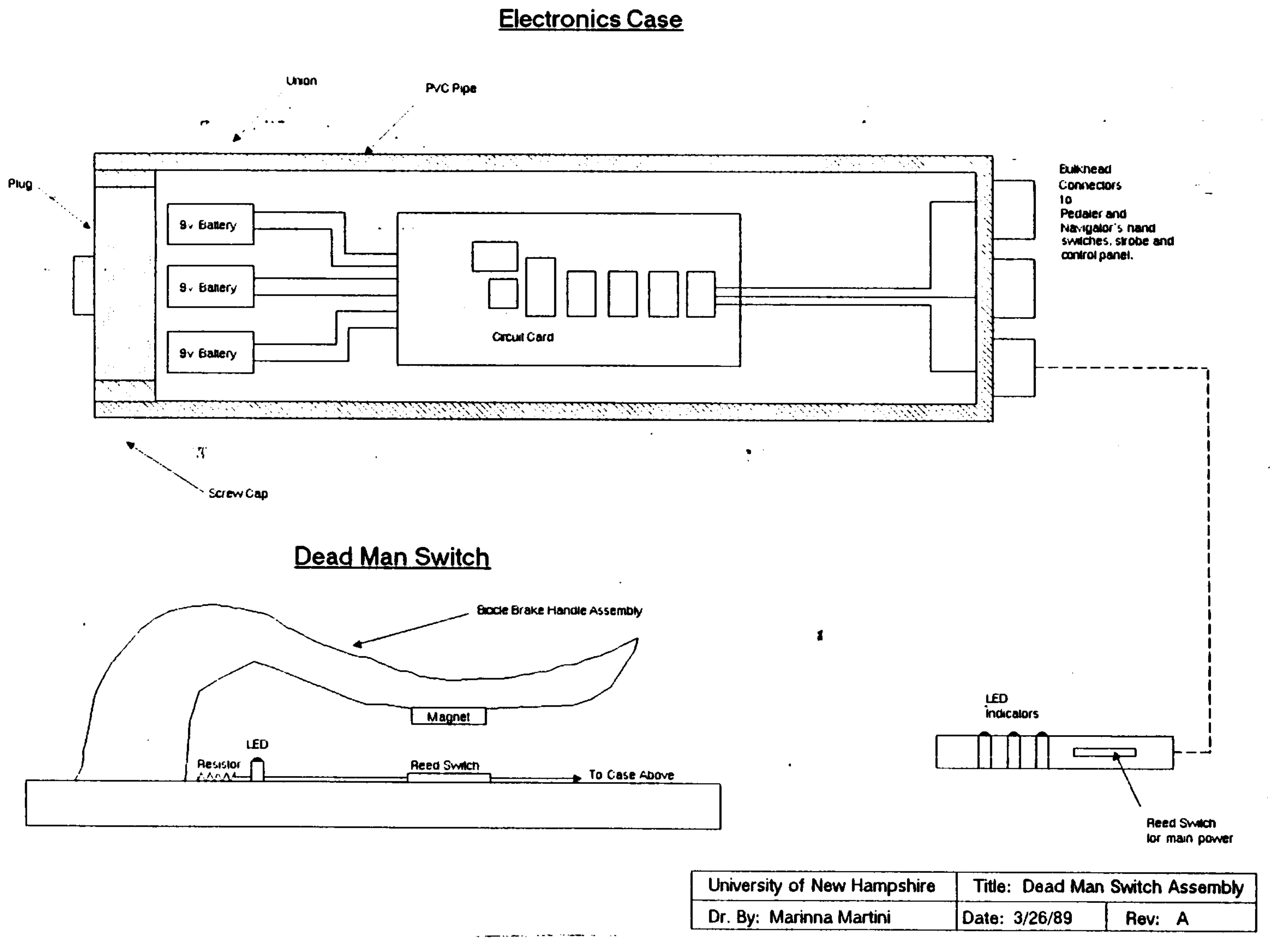

Figure 7. Deadman switch assembly drawing.

The circuit is powered by three ordinary nine volt batteries. There is a power switch in the control circuit and a green LED indicator lights up when the power supply voltage drops below an acceptable level to operate the circuit.

BIBLIOGRAPHY

BIO-MEDICAL

Anthropometrics for Designers,Croney.1971.Van Nostrand Reinhold Co..NY.

Ergometry:Basics of Medial Exercise Testing,Mellerowicz and Smodlaka.1981. Urban and Schwarzenberg.Munich.

Human Engineering Guide for Equipment Designers,2nd Ed.,Woodson and Conover 1964.University of CA Press.Berkeley.

Humanscale 1/2/3,Diffrient,Tilley,Bardagjy.1974.The MIT Press.Cambridge,MA.

Occupational Biomechanics,Chaffin and Anderson.1984.John Wiley and Sons.NY.

BICYCLING

Bicycling Science,Whitt and Wilson.2nd Ed.1982.The MIT Press.Cambridge,MA.

Cycling Physiology for the Serious Cyclist,Faria.1978.Charles C. Thomas. Springfield,Illinois.

Medical and Scientific Aspects of Cycling,Burke and Newsom.1988.Human Kinetics Books.Champaign,Illinois.

SCUBA DIVING

Human Performance and Scuba Diving,Preceedings of the Symposium on Underwater Physiology.1970.The Athletic Institute.Chicago

Medical Aspects of Sports Diving,Dueker.1970.A.S.Barnes and Co..Cranbury,NJ

Open Water Sport Diver Manual,4th Ed.,Jeppesen.1984.Jeppesen Sanderson,Inc. Englewood,Colorado.

Scubapro Professional Diving Equipment:1989 Equipment Selection Guide, Undersea Industries.Rancho Dominguez,CA.

The Source.Commercial Diving Equipment Catalogue by Amron International. Escondido,CA.

U.N.H. Handbook for Diving Safety,U.N.H. Diving Safety Board.1978.Durham,NH

DRIVETRAIN

DEFINITION

The drivetrain of the human-powered submarine transmits the leg motion of the propulsive diver to rotary motion of the propeller.

DESIGN CRITERIA

Race regulations require that all propulsion be provided solely by the propulsion diver. With this in mind, the drivetrain was designed to meet two main criteria. The first was that the propulsion diver should pedal bicycle pedals with his legs. The second was that the 42-inch propeller should turn at approximately 120 revolutions per minute (RPM) for maximum efficiency.

Ergonomic efficiency tests conducted in a swimming pool determined that an average diver would pedal at maximum aerobic efficiency at about 40 to 50 RPM while submerged. Thus, the drivetrain is required to increase the pedal to propeller speed in a 1:3 ratio.

It was necessary to design the drivetrain so it would be simple to construct and modify. This way, changes could be easily made if vehicle testing showed them necessary. Also, it made it possible to "custom fit" the drivetrain for each propulsion diver, as different divers might have different gear ratio requirements. Components were selected that would keep the drivetrain friction to a minimum and be reliable enough to last the duration of the race.

Wherever possible, the drivetrain uses simple, off-the-shelf components, all bought locally or already available from previous projects. The exception was the gearbox, which had to be machined and assembled by hand. All machining work was done by team member Ronald St. Germain.

DESCRIPTION OF PRESENT DRIVETRAIN

The present drivetrain is shown in Figure #1. The propulsion diver pedals standard bicycle pedals from a semi-recumbent position. The pedals, gear rings, crank arms, and crankshaft were taken from a ten-speed bicycle. The support bearing was machined from a block of Delrin, chosen because it does not corrode in seawater as an ordinary bicycle bearing might. It is inexpensive, easy to machine, and self-lubricating.

The sprocket gear uses a standard single-speed bicycle chain to drive a smaller sprocket gear (at an approximate 1:3 ratio). This gear is mounted on the same shaft as a 90-degree bevel gear which in turn drives another 90-degree bevel gear (at a 1:1 ratio) mounted on the driveshaft. The gear ratio could be changed quickly by using either of the two gear rings from the bicycle or by replacing the smaller sprocket. The gear ratio could be modified in about five minutes. Presently there is a 1:3.43 ratio using the larger

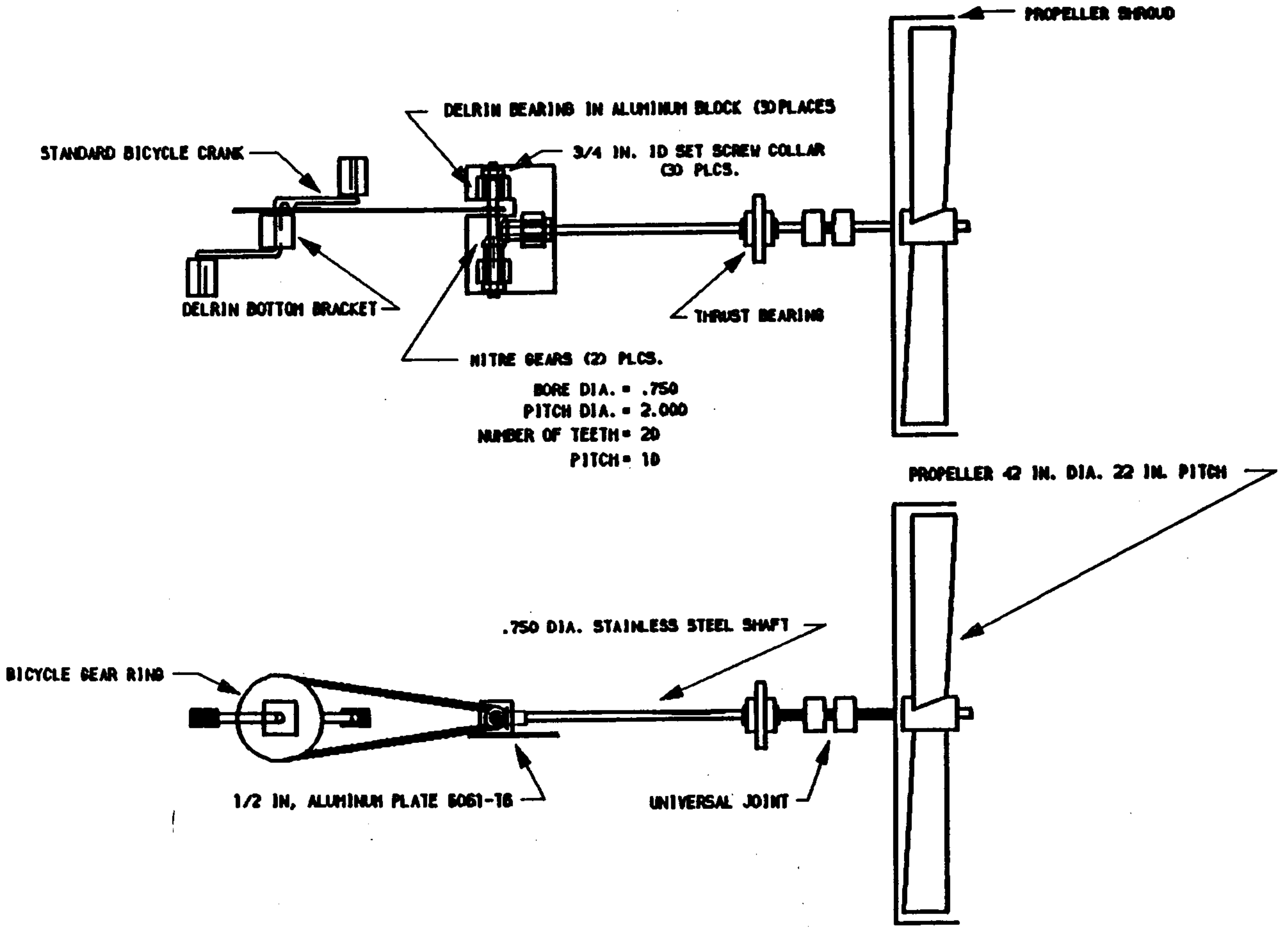

Figure #1 Drivetrain Assembly

DRIVE TRAIN

A SCALE 1: 15 DWG NO. ron1

SHEET

gear ring and a 1:2.86 ratio using the smaller gear ring.

The gearbox is rigidly bolted to a vertical rib and to the pedal support bracket. This eliminates most, if not all, movement. This was necessary so that the gears remained in alignment. The gearbox is a 0.375-inch aluminum plate with aluminum pillow blocks bolted to it. The Pillow Block Assembly is shown in Figure #2. The three pillow blocks hold the Delrin bearings and support the bevel gears and the forward end of the driveshaft. Aluminum was chosen because of its low cost and machinability. All shafts are made of 0.750-inch diameter stainless steel and reside in machined Delrin bearings.

A Hooke's joint (universal joint) was used in order to allow the propeller two degrees of freedom, as called for in the original design. The propeller was originally designed to move both side to side, providing steering control, as well as up and down to provide trim control. It was later decided to constrain the propeller to only provide steering control, but it would require no changes to the drivetrain to go with the original system.

The aft end of the shaft is supported in Delrin encased in an aluminum unit containing a thrust bearing. The Thrust Bearing Assembly is shown in Figure #3. This unit is an integral part of the submarine frame; the horizontal ribs are fastened to it. The Assembly has two functions; it supports the shaft in radial loading and it houses the thrust bearing.

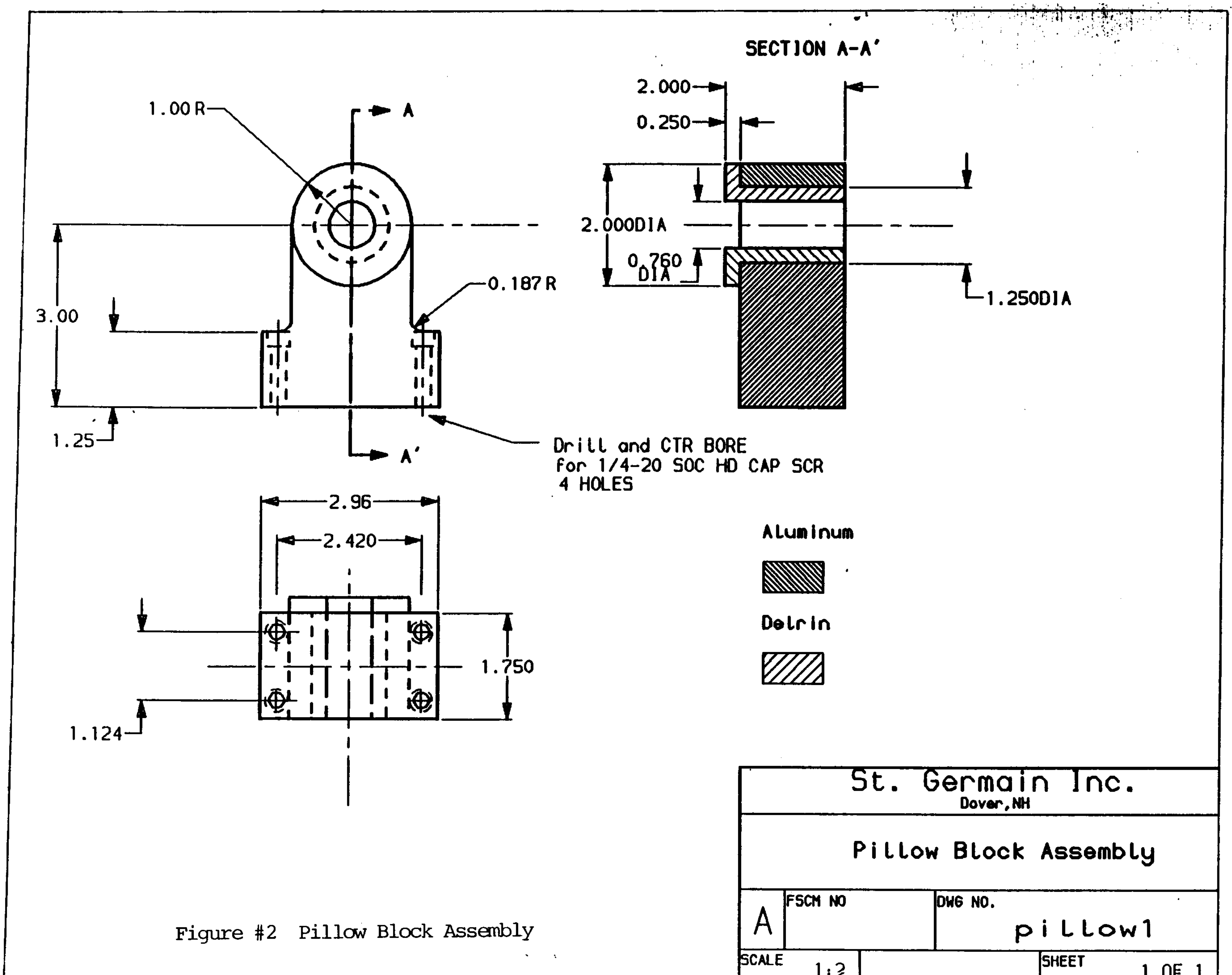

Figure #2 Pillow Block Assembly

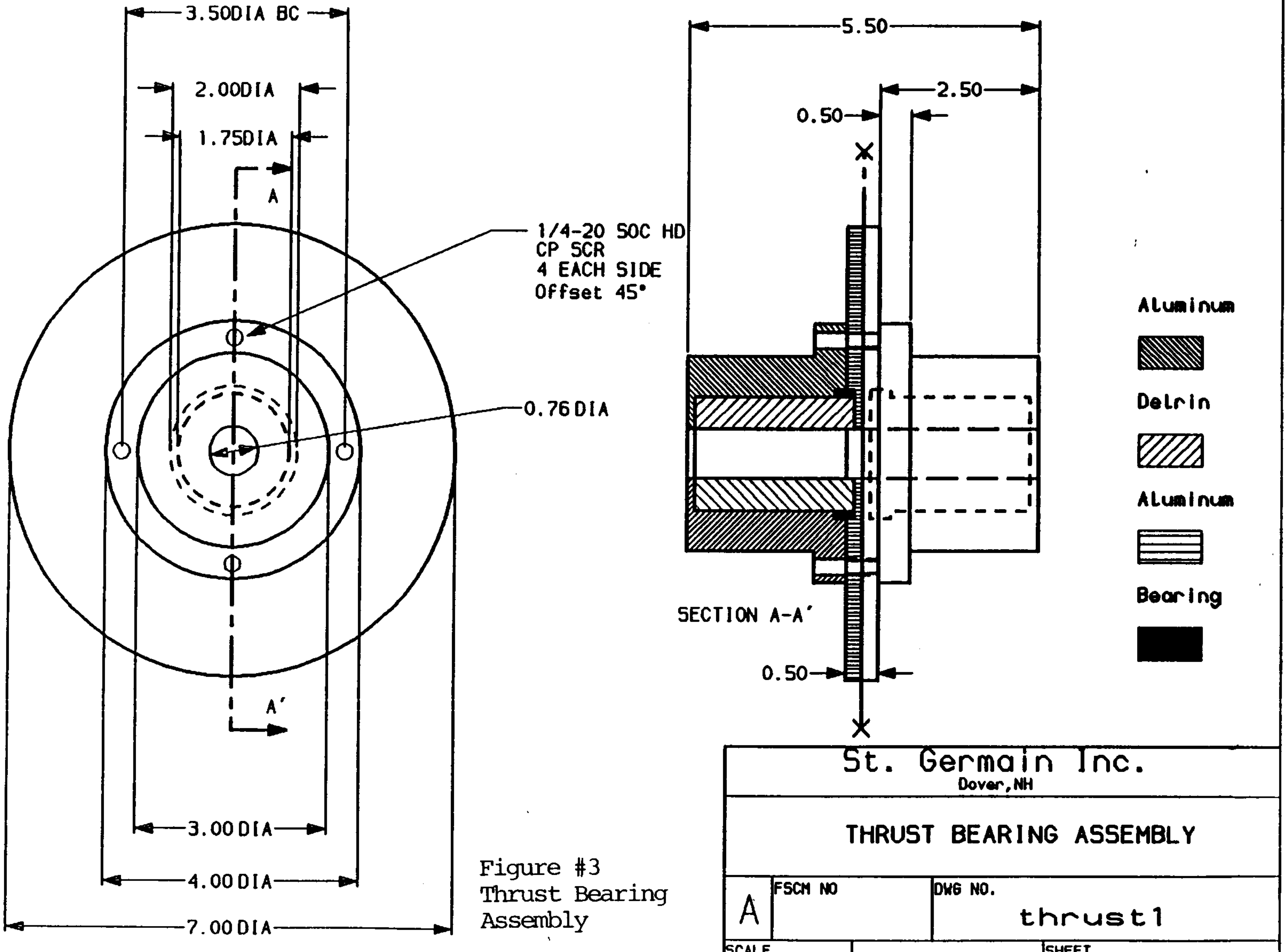

Figure #3
Thrust Bearing
Assembly

The purpose of the thrust bearing is to transfer the thrust produced by the propeller to the frame. Were it not for this thrust bearing, the propeller would push the driveshaft into the gearbox, jamming the gears.

ALTERNATE DESIGNS

Other designs considered included the use of two counter-rotating propellers on concentric shafts. This would have prevented steering with the propeller, as it would be too difficult to run one flexible joint inside another. A rudder would then have been necessary.

Another preliminary design called for two smaller propellers, one on each side of the submarine. Steering would have then been accomplished by disengaging one side. This was discarded upon the advice of Professor J. Kirwin of MIT. Side-mounted propellers would have operated outside of the submarine's wake field, and would have then been less efficient. They would have increased the drag on the submarine due to the increase in suface area.

Another preliminary design used a single, center-mounted propeller with the torque transmitted by a flexible shaft rather than a solid shaft. A spherical bearing would have been used at the present location of the thrust bearing. (The flexible shaft could not be located outside the hull because it could not support the compressive thrust of the propeller.) Steering control of the propeller would have been accomplished in the same manner as the present design. This was discarded because of the high cost of a flexible shaft able to withstand the torque generated. Also, the flexible shaft provided no great advantage over the current system.

REFERENCES

1. Mechanics of Marine Vehicles. B.R. Clayton and R.E.D. Bishop. Gulf Publishing Co. Houston 1982.

2. Machine Design Fundamentals: A Practical Approach. Uffe Hindhede, et al. John Wiley and Sons. New York 1983.

3. Mechanical Engineering Design, Fourth Edition. Joseph Edward Shigley, Larry D. Mitchell. McGraw-Hill Book Co. New York 1983.

4. Marine Propulsion: Principles and Evolution. Robert Taggart. Gulf Publishing Co. Houston 1969.

5. Unpublished Design Project Reports of ET 644, taught by Professor Ralph Draper of the University of New Hampshire, Spring 1988.

PROPELLER

I. Design Criteria

1. Efficiency
2. Maximum Power Output at low RPM
3. Weight and Buoyancy
4. Non Corrosive Material
5. Cost

II.

One of the areas of vital importance to the submarine is the propulsion device used to move it through the water. To begin the search for the best propeller, the basic specifications, such as estimated ship velocity, power input to the shaft, and the dimensions of the sub had to be known. From work done previously by Professor Neil Vroman of U.N.H., the sustained horsepower was estimated at roughly .15 to .17, and from B.E.T. research on human powered subs the estimated ship velocity was between 2.5 and 4 knots.

Since very little information about propellers was known a meeting was arranged with Professor Justin Kerwin at M.I.T on November 14, 1988, to obtain information on propeller design. Before meeting with Professor Kerwin it was suspected that the propeller would be large and two bladed. Once the design team met professor Kerwin at

M.I.T's Department of Ocean Engineering our suspicions were proven correct. We were allowed to use the M.I.T computer program on propeller design and after trying various parameters, it was obvious what type of propeller was needed.

The program suggested that for best efficiency the propeller should rotate at 115 revolutions per minute, contain a constant chord length of 3.5 inches, and have a pitch of 22.3 inches, at a prop diameter of 36 inches. The software showed that there was little change in the pitch, chord length, and rpm, required for best efficiency of propellers from 36 to 48 inches in diameter.

It was initially decided that a 36 inch propeller would be the best choice because the widest part of the sub was 3 feet. But after a small change in the structural design, the width was increased to 3.5 feet. In this case, A 42 inch diameter propeller provides more displacement without using up much more energy from the pedaller, so the decision was made to select a larger propeller.

The material of the propeller had to be both buoyant and light, which pointed to only one direction: a wood (ultra-light airplane type) propeller. The search for a manufacturer of such propellers ended with an ad in the back of "Popular Mechanics". Airotec inc. of Quinlin, Texas makes propellers to exact specifications at relatively cheap prices. Originally, the budget included 500 dollars for a propeller. Since Airotec could build one for 80 dollars, two 42 inch diameter propellers and one 36 inch diameter propeller (with the specifications listed above) were ordered. By testing, it became clear that the larger prop should be used in the race. The other two are backup props in case of an accident and damage to the primary propeller.

SHROUD

I. Design Criteria

1. Trainable for Submarine Control
2. Protection for Propeller
3. Safety from Propeller for Nearby Divers
4. Weight and Buoyancy
5. Non Corrosive Material
6. Cost

II.

Once the control system of the submarine was designed the concept of a trainable prop was put to paper. Two cables would be attached to the outside diameter of the shroud. In order to have enough strength, 6061 aluminum pipe was chosen to connect to a center piece of which the shaft would pass through. (figure 1) This center piece was originally designed with aluminum and a delrin core but

FIGURE 1

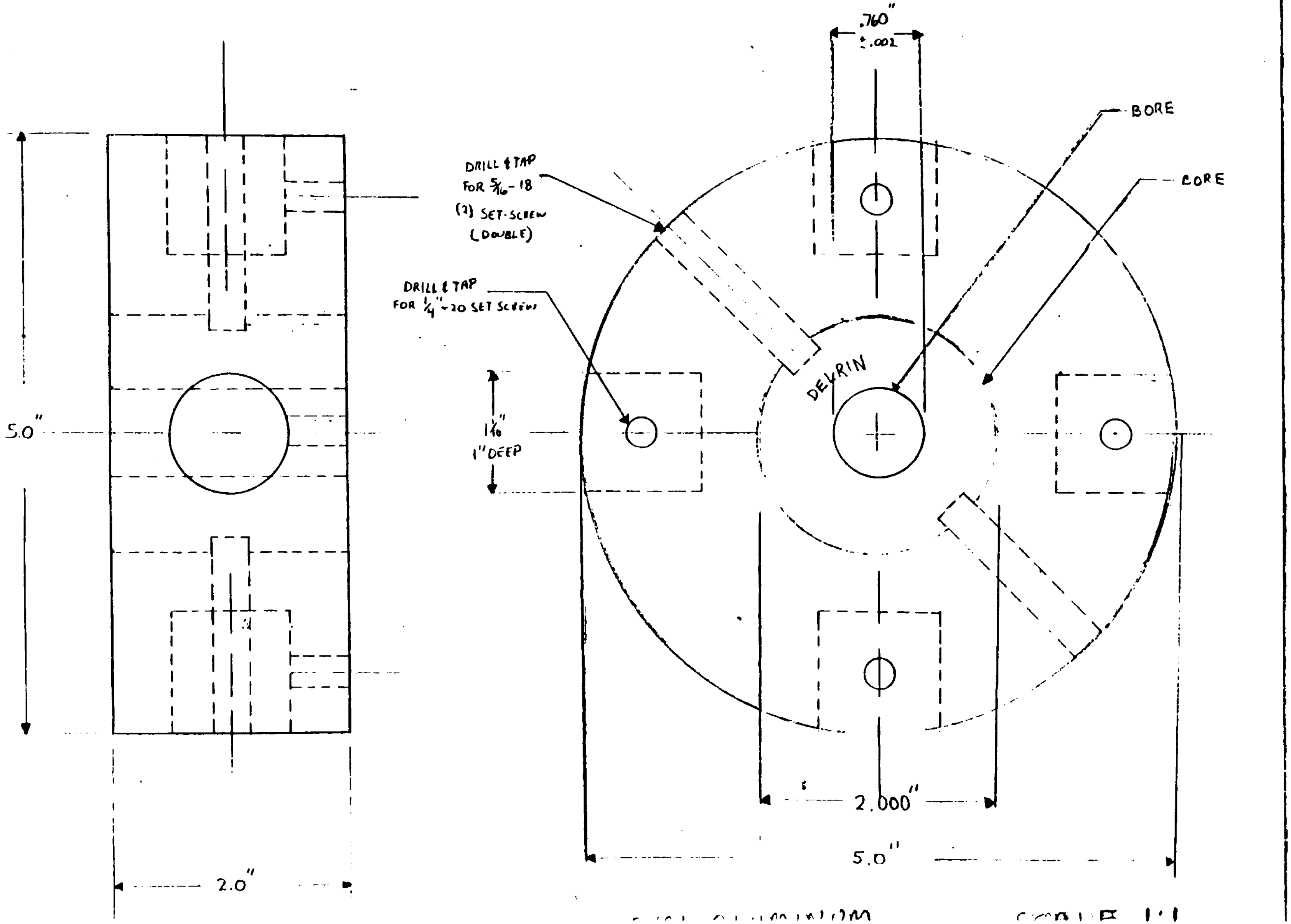
.760"
±.002
BORE
CORE
DRILL & TAP
FOR 5/16-18
(2) SET-SCREW
(DOUBLE)
DRILL & TAP
FOR 1/4"-20 SET SCREW
1 1/16"
1" DEEP
DELRIN
5.0"
2.000"
5.0"
2.0"

was changed to hard plastic due to availability of the aluminum. Delrin plugs in the end of each of the four supports were decided upon so that the Lexan shield could be attached to the pipes (figure 2). All of the pipes are filled with foam for extra buoyancy.

The diameter of the shroud was designed at 46 inches so there would be a 2 inch clearance between the prop and the Lexan protection. This gap between the Lexan and the propeller narrowed to 1.5 inches with the change in center piece. At propeller speeds of such low RPM this clearance has little to no effect on the overall performance of the vessel, so the separation distance was not of main concern.

At first, 1/16 inch thick Lexan was used as the protective barrier for the shroud, but in the first pool test it proved to be excessively flexible, bending into the propeller. To alleviate the problem 1/8 inch Lexan was cut out and bolted to the 1/16 inch piece to make a 3/16 inch protective shell. This proved to be adequate to withstand the force from the pressure drop caused by immediate stoppage of the propeller.

To keep hands and feet out of the propeller region a protective cage is connected to the Lexan shell (Figure 3). This cage will be constructed of a Thin nylon cord or a plastic chain link fence, depending on the extent of the safety regulations imposed by the race officials.

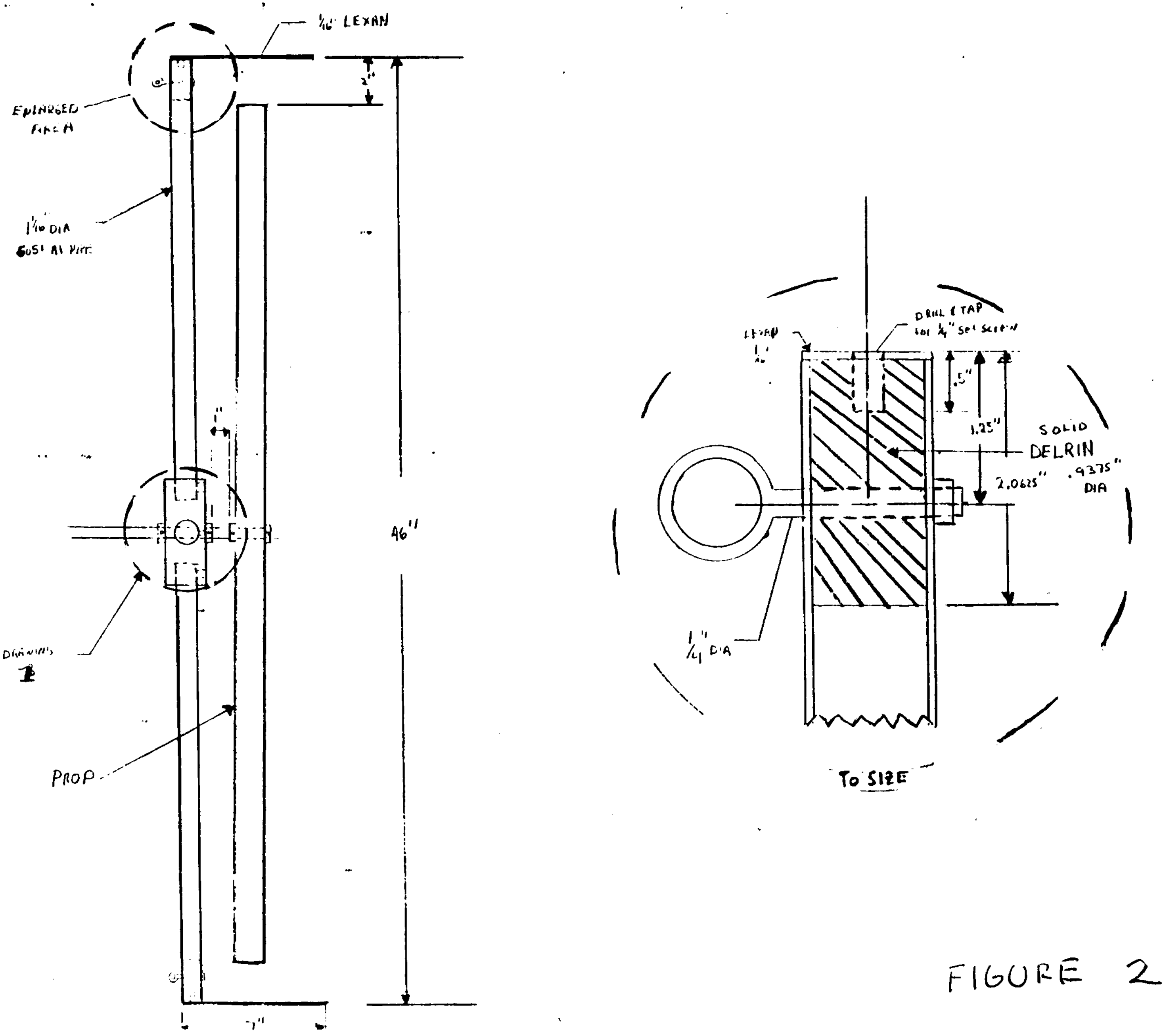
1/16" LEXAN
ENLARGED AREA
2"
1 1/16 DIA
6051 Al PIPE
1"
46"
DRAWING 1
PROP
7"
LEXAN 1/16"
DRILL & TAP for 1/4" SET SCREW
.5"
1.25"
SOLID
DELRIN
2.0625"
.9375"
DIA
1/4" DIA
TO SIZE

FIGURE 2

FIGURE 3

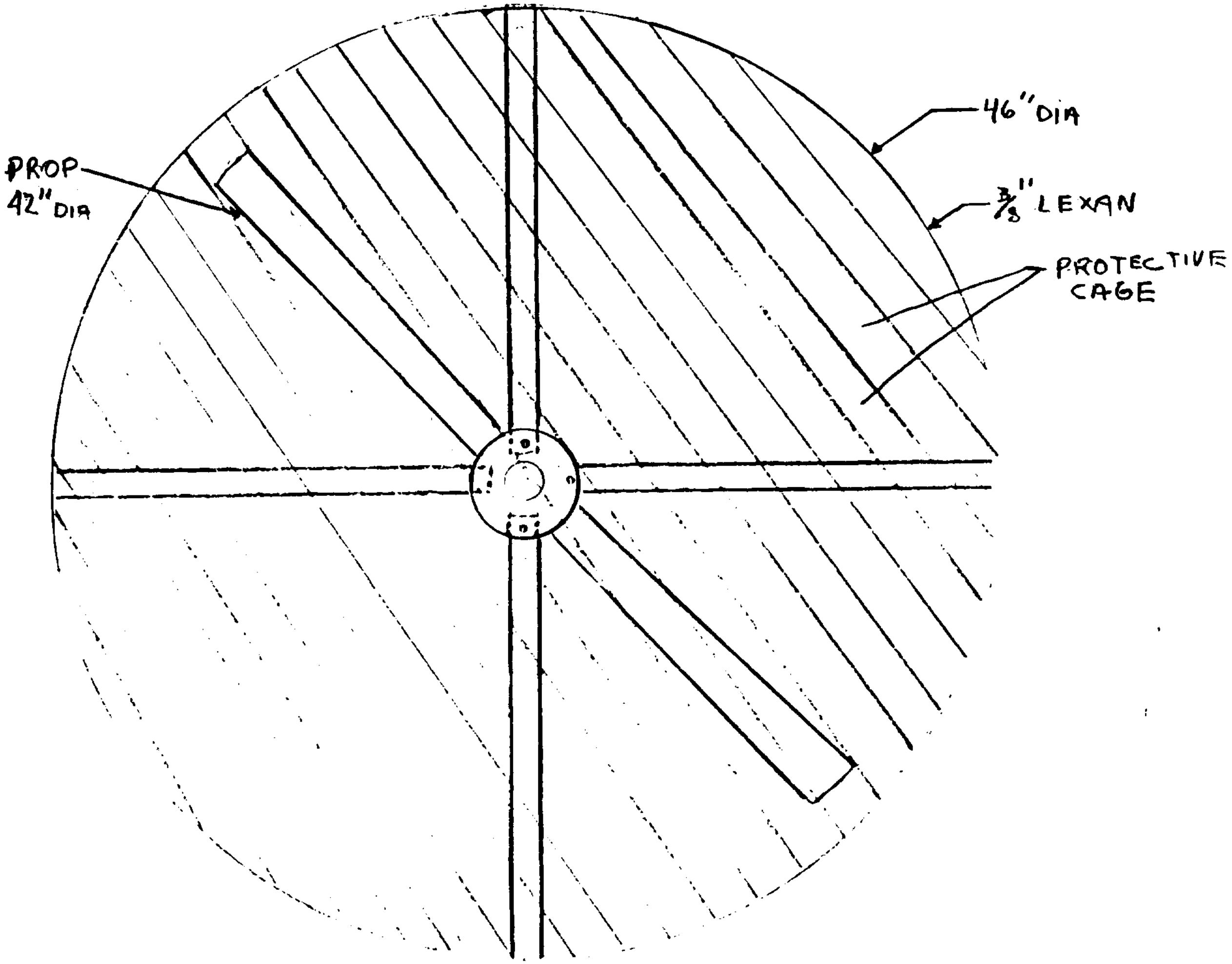

CONCLUSION

Results from this project created a submarine that met all the design criteria. We developed a vehicle that will successfully compete in the race on June 23, 1989. Further testing may show that the submarine needs minor adjustments, but the final design has many unique features which will supersede other vehicles. These features include:

Trainable propeller

Clear hull

Integrated frame using wood and tubing

Clamshell escape hatch

Small turning radius

ACKNOWLEDGEMENTS

Many people and institutions lent their support and effort to this project. If it were not for them, we certainly would not have come as far as we have. No mere words can express our gratitude.

Thanks to the University of New Hampshire for their support in providing us with the necessary tools and workspace. Thanks to the Sea Grant Program for the majority of the funds provided. Thanks to the Dean's Office of the College of Engineering and Physical Sciences for giving us the money to enter the race. Thanks to the Mechanical Engineering Department, including the many professors who patiently guided us.

There were three student team members who were not part of the TECH 697 course but were an irreplacable component of the overall effort.

Ronald St. Germain is a Bachellor of Engineering Technology student who first became involved with the project last April and worked throughout the summer, on his own time, to design and build the test frame used in the swimming pool ergonomic testing. He alone did all of the very detailed, precise machining work required. Active from the very beginning, he was an indispensible part of the team.

Jeff McCalla is a graduate student in Ocean Engineering

who spent many hours helping us construct the frame. Many times he helped pull us through. He designed and built the control planes.

Marina Martini is a graduate student in Ocean Engineering who patiently sat through our long design meetings, giving us excellent advice. She also designed and built the deadman switch.

Our advisor, Dr. Gerry Sedor, helped pull us together and create a team out of a group of individuals, providing the direction necessary to keep us on track. He spent many long hours raising the funds that will make our participation in the race possible.

Dr. Eugene Allmendinger gave us a crash course in naval architecture at the very beginning when we thought a submarine was a kind of sandwich. He provided continuous guidance throughout the year with his expert knowledge.

Dr. Neil Vroman is an exercise physiologist who patiently explained to we engineers about the human machine. He was instrumental in conducting the ergonomic testing and provided us with much-needed advice.

Mr. Lynn Darnell was a valuable asset. He is a certified diver who once built his own submarine. He invited us to his home where he started us off with many ideas. He lent us his expertise in forming the nose cone and in designing the deadman switch. He also helped to create a permanent record of our progress on film.

Professor J. Kirwin of MIT allowed us to use his software to select our propeller, saving us countless hours.

Professor R. Swift patiently sat through our long design meetings, lending us his expert advice when we needed it, which was often.

Mr. Paul Lavoie was in charge of the diver safety and helped to ensure a safe design.

Professor Ralph Draper initiated the project last Spring when he required his ET 644 class to come up with a conceptual design for newly-published race rules.

Professor Allen Drake patiently helped us with the administrative duties of TECH 697. He helped us to set up our budgets and schedules and kept us focused on the goal.

Mr. Bill Littlefield helped us with his years of experience, telling us the things that we could and could not do.

Mr. Jim Abase used his knowledge to help us create a superior design for the deadman switch.

There were many corporate sponsors who gave us donations to help get us to the race. We wish to thank them all, both large and small. If it were not for them. we would not be able to participate in the race.