NOAA Technical Memorandum NMFS

MAY 2013

A GUIDE TO CONSTRUCTING HYDROPHONE ARRAYS FOR PASSIVE ACOUSTIC DATA COLLECTION DURING NMFS SHIPBOARD CETACEAN SURVEYS

Shannon Rankin[1,2], Jay Barlow[2],
Yvonne Barkley[1,3], Robert Valtierra[4]

[1]Ocean Associates, Inc., 4007 N. Abingdon St., Arlington, VA 22207

[2]Southwest Fisheries Science Center. National Marine Fisheries Service
NOAA 8901 La Jolla Shores Dr., La Jolla, CA 92037

[3]Pacific Islands Fisheries Science Center, National Marine Fisheries
Service, NOAA 1601 Kapioloani Blvd., Ste 1000, Honolulu, HI 96814

[4]Boston University, Department of Mechanical Engineering
110 Cunningham St., Boston, MA 02215

NOAA-TM-NMFS-SWFSC-511

U.S. DEPARTMENT OF COMMERCE
National Oceanic and Atmospheric Administration
National Marine Fisheries Service
Southwest Fisheries Science Center

The National Oceanic and Atmospheric Administration (NOAA), organized in 1970, has evolved into an agency that establishes national policies and manages and conserves our oceanic, coastal, and atmospheric resources. An organizational element within NOAA, the Office of Fisheries, is responsible for fisheries policy and the direction of the National Marine Fisheries Service (NMFS).

In addition to its formal publications, the NMFS uses the NOAA Technical Memorandum series to issue informal scientific and technical publications when complete formal review and editorial processing are not appropriate or feasible. Documents within this series, however, reflect sound professional work and may be referenced in the formal scientific and technical literature.

NOAA Technical Memorandum NMFS
This TM series is used for documentation and timely communication of preliminary results, interim reports, or special purpose information. The TMs have not received complete formal review, editorial control, or detailed editing.

MAY 2013

A GUIDE TO CONSTRUCTING HYDROPHONE ARRAYS FOR PASSIVE ACOUSTIC DATA COLLECTION DURING NMFS SHIPBOARD CETACEAN SURVEYS

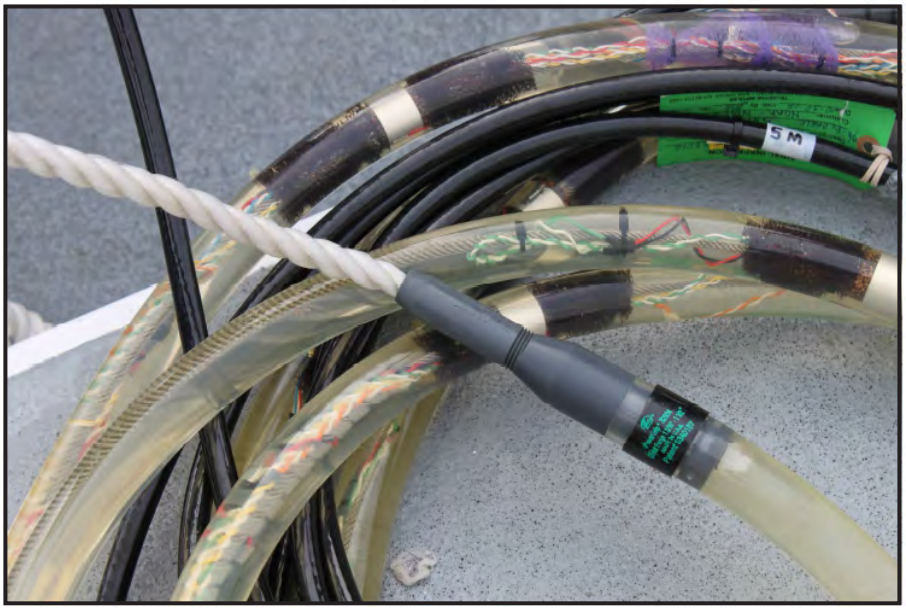

Shannon Rankin[1,2], Jay Barlow[2], Yvonne Barkley[1,3], Robert Valtierra[4]

[1]Ocean Associates, Inc., 4007 N. Abingdon St., Arlington, VA 22207

[2]Southwest Fisheries Science Center. National Marine Fisheries Service NOAA 8901 La Jolla Shores Dr., La Jolla, CA 92037

[3]Pacific Islands Fisheries Science Center, National Marine Fisheries Service, NOAA 1601 Kapioloani Blvd., Ste 1000, Honolulu, HI 96814

[4]Boston University, Department of Mechanical Engineering 110 Cunningham St., Boston, MA 02215

NOAA-TM-NMFS-SWFSC-511

U.S. DEPARTMENT OF COMMERCE
Rebecca M. Blank, Acting Secretary
National Oceanic and Atmospheric Administration
Dr. Kathryn D. Sullivan, Acting Administrator
National Marine Fisheries Service
Eric Schwaab, Assistant Administrator for Fisheries

TABLE OF CONTENTS

INTRODUCTION **3**
METHODS: COMPONENTS **4**
A. Pre-amp Assembly **4**
B. Hydrophone Preparation **8**
C. Depth Sensor Assembly **9**
METHODS: END ARRAY CONSTRUCTION **10**
A. Assemble Cable Connector **10**
B. Component Placement and Wiring **12**
C. Insert Components into Tubing **17**
METHODS: INLINE ARRAY CONSTRUCTION **19**
A. Assemble Connector **19**
B. Component Placement and Wiring **21**
C. Insert Components into Tubing **22**
RESULTS AND DISCUSSION **25**
RESOURCES **26**
ACKNOWLEDGEMENTS **26**
APPENDIX I. Parts List **27**
APPENDIX II. Array Depth Measurement **29**
APPENDIX III. Schematic for Custom Adaptors for End Array **31**
APPENDIX IV. Schematic for Custom Adaptors for Inline Array **32**
A. Adapt-o-Matic **32**
B. Tension Disk **33**

INTRODUCTION

Passive acoustic monitoring (PAM) has been increasingly used for detection of cetaceans during shipboard surveys by National Marine Fisheries Science Centers. Unfortunately, much of our required equipment cannot be purchased 'off the shelf', and there are few resources for constructing, troubleshooting, and repairing equipment. The Southwest Fisheries Science Center has been conducting shipboard towed hydrophone array surveys since 2000, and we have been designing and building our own equipment since 2002. As additional Science Centers increase their usage of this technology at sea, we are finding that it is difficult to obtain functioning equipment with the time and resources typically provided prior to a given survey. In an effort to share our combined knowledge and take advantage of our limited resources, we are developing a standardized methodology for passive acoustic surveys that includes modular hardware and software systems that can be used during shipboard surveys.

By standardizing our methods and equipment, we can provide flexible solutions to equipment repair and modifications as well as the opportunity to loan/borrow equipment from other Science Centers as need arises. Likewise, standardization of methods will allow us to more easily compare results across ocean basins.

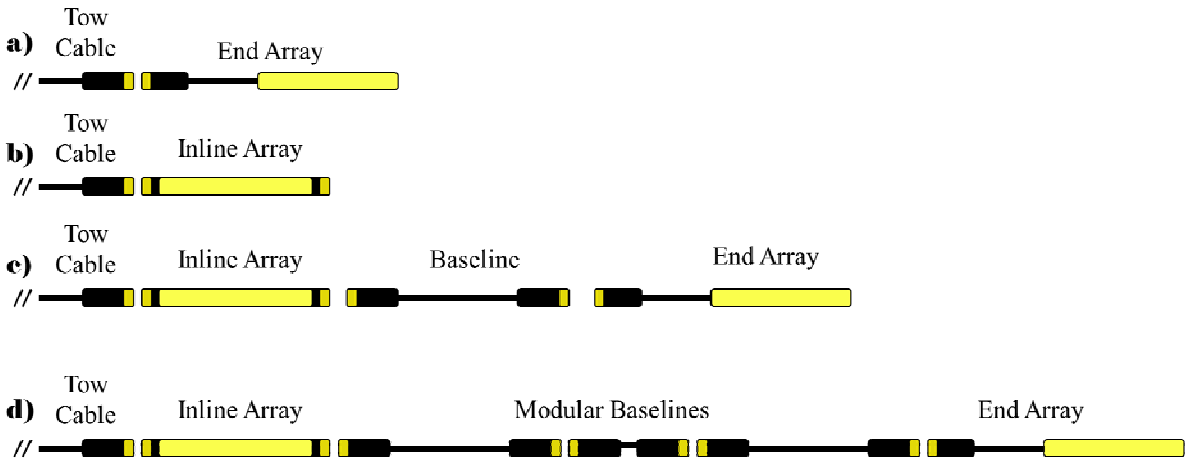

Figure 1. Schematic diagram of the potential array configurations presented in this report, including a) simple end array, b) simple inline array, c) inline array and end array with a single baseline extension between the two array components, and d) inline and end array with multiple modular extensions for increased baseline distance between the two arrays.

The array design presented here consists of two types of arrays: an inline array and an end array, which can be used in multiple configurations (Fig. 1). The end array has a single connector with a tail that serves as the final termination (Fig. 1a). The inline array is constructed with connectors at either end, such that it can be connected in series (Fig. 1b) or as a terminal array (not suggested, unless a modification to allow for a tail is provided). The inline and end array are connected using a 'modular baseline', which consists of a length of cable with a connector at

each end (Fig. 1c). The length of this extension may vary depending on individual requirements, and multiple baselines can be connected in series to provide flexibility in the overall baseline distance between the two arrays (Fig. 1d). The entire modular array is connected to a tow cable (with connector). A key component of this entire assembly is the underwater connectors. Our assembly is constructed using the Teledyne Impulse MHDM-26 connectors (-CCR, -CCP, and -BCR), which are high quality underwater connectors providing 26 pins. Other connectors may be used; however the custom adaptors for the inline array are designed for the MHDM-26 connector and would need to be modified to work with different connectors. This report will describe how to build a modular hydrophone array based on the configurations as they exist in fall 2012. These components will evolve with improved technology; however, modification of these systems to incorporate improvements in technology should be simple.

METHODS: COMPONENTS

A. Pre-amp Assembly

A list of components for pre-amp assembly is given in Table 1 of Appendix I. Our pre-amp is built around a Texas Instruments OPA1632 op-amp. This chip accepts single-supply voltages from 5 to 32v. It has ultra-low noise (1.3 nV/√Hz) and a gain bandwidth product of 180 MHz. A schematic representation of a one-chip pre-amp circuit (Figure 2) shows the basic configuration of the components. In this pre-amp design a battery provides a DC power supply (6-15 V). The diode protects the chip if the battery terminals are accidentally reversed when connecting the battery. The capacitors C1 and C2 provide voltage stabilization for the power supply to prevent oscillations in the output; this is particularly important when long cables are used. A piezo-ceramic provides the input signal. Resistors R1 and R2 set the pre-amp gain, and resistor R1 and capacitor C3 set the corner frequency for a high-pass filter. The input resistor R5 is optional, but we have found that it improves performance with some of the piezo-ceramics, presumably by preventing the buildup of a static charge on the surface.

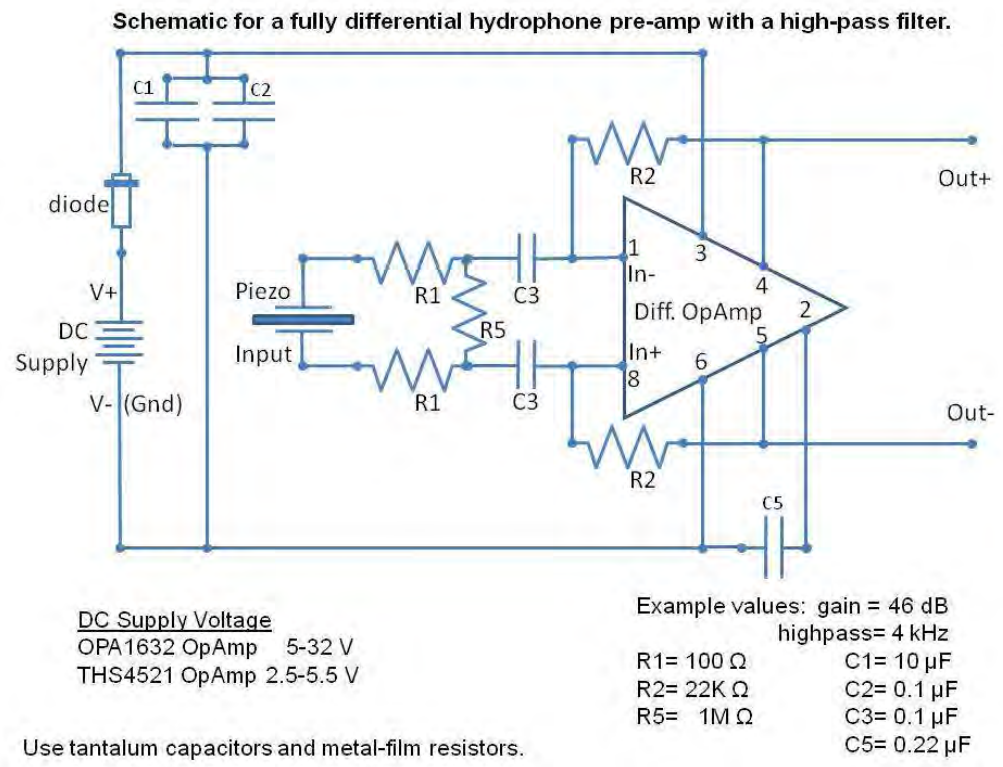

Figure 2. Schematic representation of a pre-amp design using a fully differential op-amp. Note that the values for R1=R3 (100 Ω), R2=R4 (22 kΩ for cylindrical hydrophones, 100 kΩ for Reson hydrophones), R5=R7 (1 MΩ), C1=10 µF, C2=C3=C4=0.1µF, C5=0.22 µF). Note that there is no R6 in this design.

To make things easier, we will use a *printed circuit board* (*PCB*) designed for differential pre-amps (Fig. 3). This board has soldering *pads* for the attachment of the OPA1632 pins, through-holes for the passive components with wire leads, and surface wiring (*traces*) between the holes and pads. The PCB shown (Figure 3a) includes two pre-amp chips and therefore allows pre-amplification of two signals. Soldering of components should begin with chip placement (as this is the most difficult component to adhere to the PCB), and care should be taken to ensure that relevant components have the correct orientation (chip, capacitors, diodes, Fig 3b, 3c). Signal wires should be 24 awg Teflon (PTFE/TFE) wires, and all paired wires should be twisted together. For consistency, we suggest following these standards (Fig. 3d):

1. Red is always POWER IN
2. Black twisted with Red is always POWER OUT
3. Color/White is always SIGNAL IN
4. Color/Black is always SIGNAL OUT

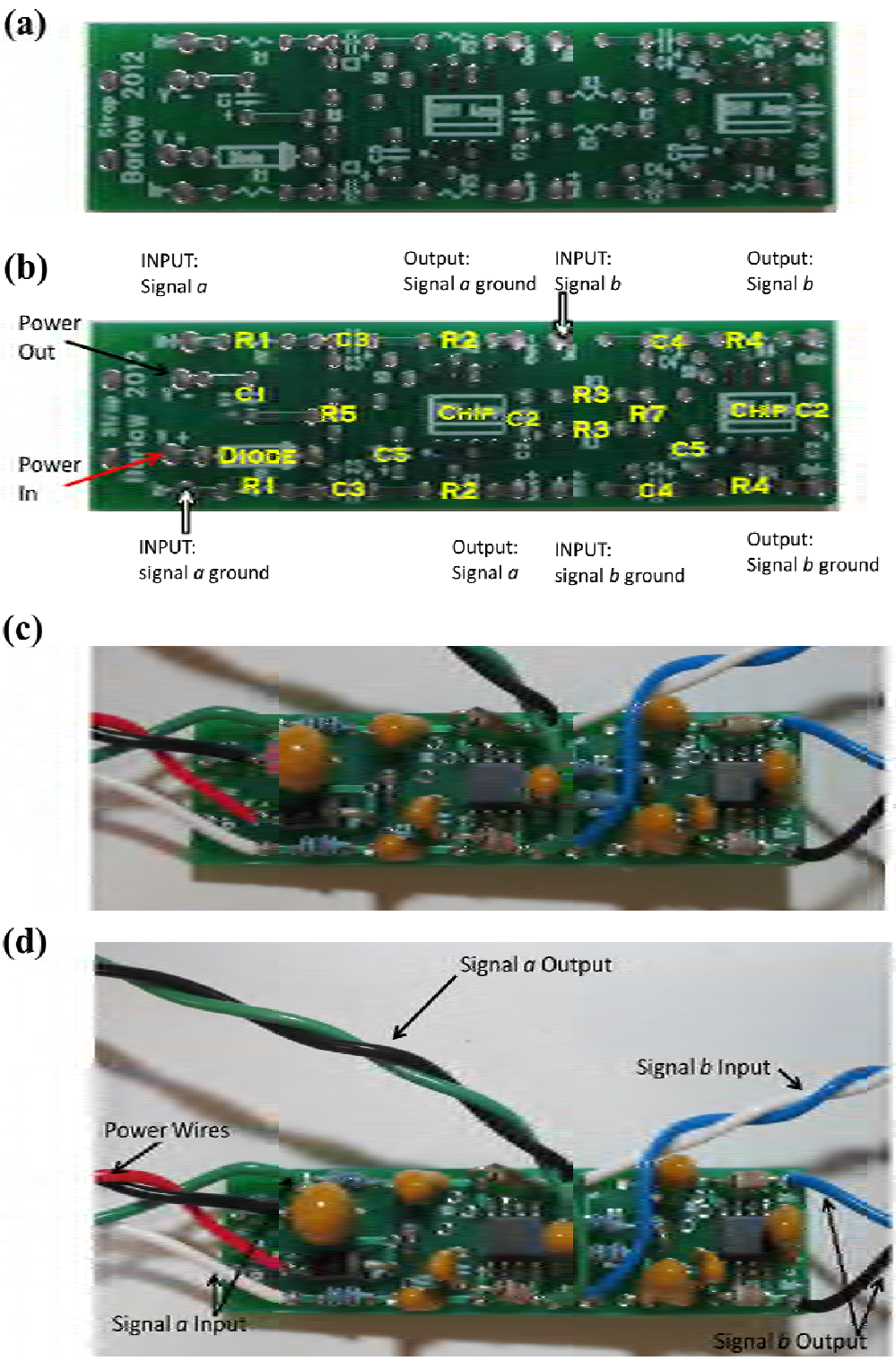

Figure 3. Printed circuit board (a) is based on pre-amp schematic shown in Figure 1 and provides pre-amplification for two input signals. Positions of components are shown as (b) labels, (c) with components soldered in place and (d) with power and signal wires labeled.

We suggest testing all pre-amps to ensure that they are functioning and potting pre-amps in epoxy to minimize the possibilities of damage to the pre-amp or components. Testing should first consist of a visual testing to confirm that all components are adhered to the board and in the correct orientation. This should be followed by a thorough audio test using a power supply (9v battery supply should be sufficient) and hydrophone input and headphone monitoring of hydrophone output.

Additional testing of pre-amp gain is also suggested using a high quality digital multimeter (with sensitivity to the relevant frequencies). A signal generator will supply signals of a known voltage to a powered pre-amp, and the measured output voltage will provide the overall pre-amp gain (Fig. 4). Multimeter should be set to AC volts (note: signal generator puts out an oscillating signal, so we need to measure it using AC Volts) and connected to the signal input (from the signal generator). Slowly change the gain on the signal generator until the multimeter reads 1V (or, 1000 mV). Note that you will need a high quality multimeter to measure AC volts at high frequencies (check specifications for usable frequency range). This will be your INPUT SIGNAL. The multimeter should then be connected to the appropriate signal output (Fig. 4) to measure the voltage. This will provide the OUTPUT SIGNAL. Repeat for different frequency inputs. The gain can be calculated using the following equation:

$$\text{GAIN} = \text{Signal Out}/\text{Signal In}$$

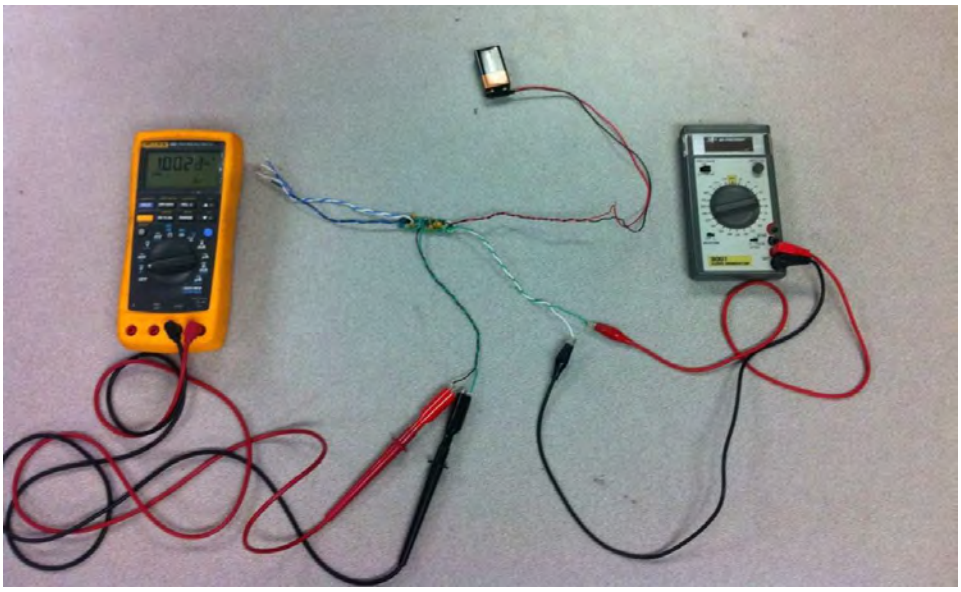

Figure 4. Setup to test gain on pre-amp. Gain is calculated by measuring the ratio of the signal out (pre-amp output) to the signal in (signal generator input) for each frequency.

Potting of pre-amps is done within a small piece of copper pipe, using a non-conducting epoxy (Fig. 5a). Wires from the pre-amp should remain in their twisted pairs to aid in identification of appropriate signal and power inputs/outputs (Fig. 5b). Once the epoxy has hardened, we suggest covering the entire copper pipe with a large heat-shrink tube to cover any rough edges (Fig 5c).

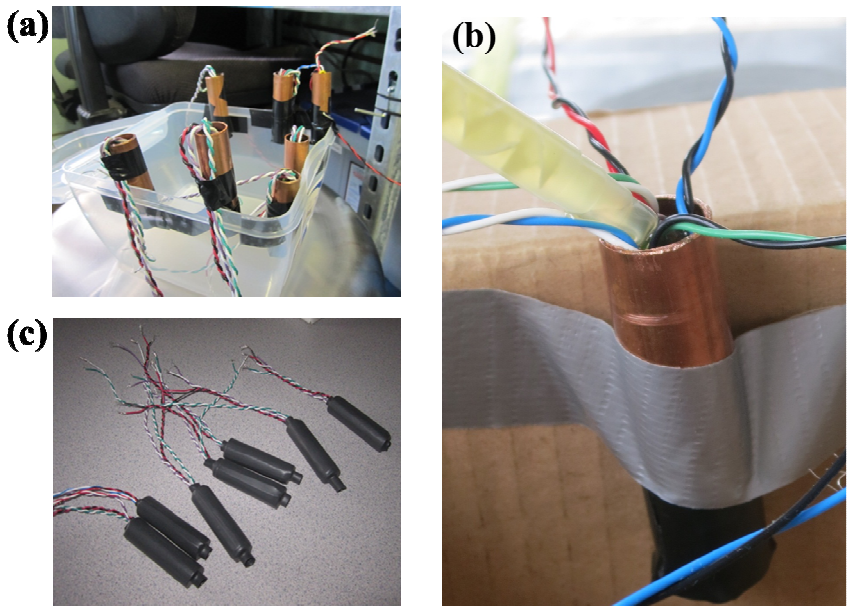

Figure 5. Pre-amps should be (a) inserted into a piece of copper pipe with the twisted wire pairs exiting the top end of the copper pipe and tape sealing the bottom end. The cylinder is (b) filled with epoxy from the top. Allow epoxy to harden before (c) applying heat-shrink tubing.

B. Hydrophone Preparation

In the examples given here, a plated piezo-ceramic cylinder is used to construct a mid-frequency hydrophone (1-30 kHz) and a commercial hydrophone element (Reson 4013) is used as a high-frequency hydrophone (5-150 kHz). The hollow cylinder of the mid-frequency element allows all wires to pass through and thereby allows sounds to reach the surface of the ceramic element without impedance by the wires. The commercial hydrophone will have the hydrophone wires in place; here we show how to attach the wires to the cylindrical piezo-ceramic hydrophones.

The piezo-ceramic element should come plated with metal on both interior and exterior surfaces, but will not have wires attached. If the plated surface looks tarnished, clean it gently with a new pencil eraser. Use 30-awg stranded wire and fine (< 0.55 mm) flux-core silver solder and a high-quality soldering iron with a fine point. For consistency, we suggest using red (signal +) wire for the outer surface of the cylinder, and black (signal -)

for the inner surface of the cylinder (Fig. 6). The first step is to create a 'pad' on the surface to prepare it for soldering the wire. To create the pad, heat the plated surface of the ceramic and then melt solder on the surface to create a circular pad (Fig. 6a) or a pad along the axis (Fig. 6b), depending on the size of the cylinder. Strip 5 mm of insulation off the wire and 'tin' the wire by coating it with a thin layer of solder. Press the 'tinned' wire into the solder pad, adding a little solder as needed to attach the wire to the pad. Repeat this process on the inner surface. Avoid excessively heating of the surface, which may damage the element.

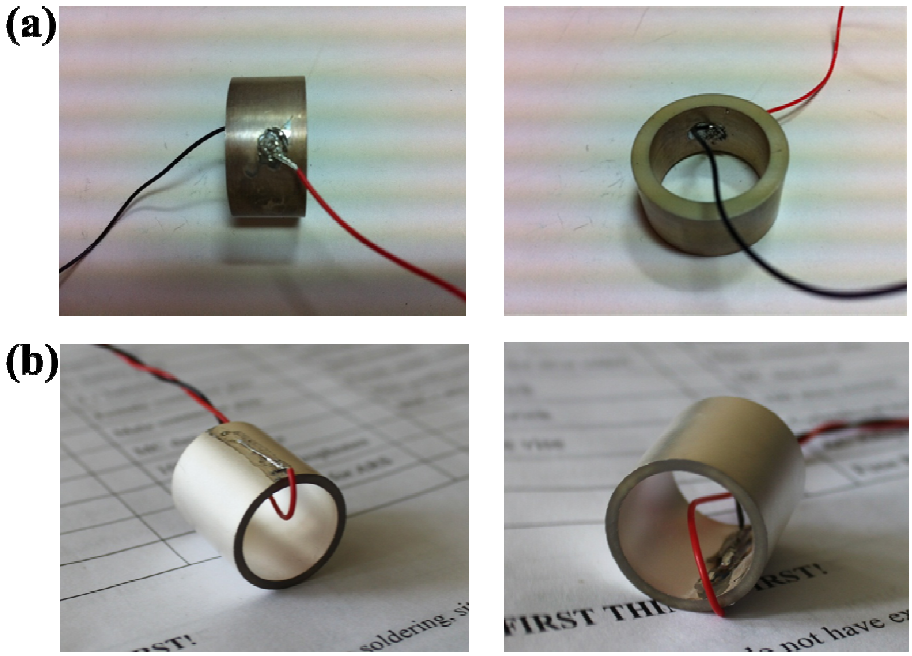

Figure 6. Solder red wire to outside of piezo-ceramic cylinder, and black wire to inner surface of cylinder. Wires may be soldered in (a) a circle or (b) along the cylinder axis.

C. Depth Sensor Assembly

Our hydrophone array design incorporates an analog pressure sensor to measure array depth. This sensor outputs amperage (between 4 and 20 milliamps) that is proportional to depth (see Appendix II). The depth sensor described in this document requires two wires and some simple modifications are employed to minimize the chances of damage within the oil array. First, 24-awg wires should be soldered into the holes, 1 (V+) and 2 (V-). We suggest applying an epoxy to the circuit board for protection. Wrap electrical tape around the circuit board creating a small cup to hold the epoxy (non-conducting epoxy, Fig. 7a). Slide a large diameter heat-shrink (1.5" diameter) over the sensor end to cover the exposed wires (Fig. 7b). Remove the plastic cap on the sensor before securing it inside the array.

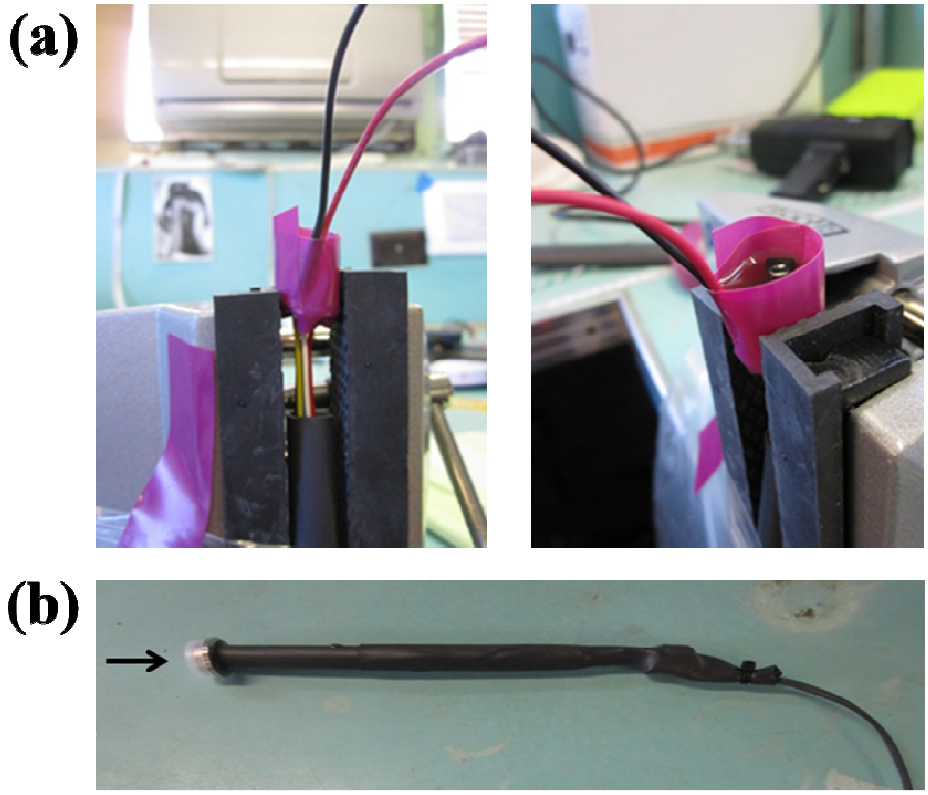

Figure 7. Preparation of (a) circuit board with epoxy and (b) application of heat shrink tubing to minimize the risk of damage to the depth sensor.

METHODS: END ARRAY CONSTRUCTION

An 'end array' is an array that is constructed with a single connector such that it will trail at the end of a tow cable and/or modular array assembly. At the terminal end of the array is a tail (to prevent fish-tailing of the array itself while being towed). We suggest an optional seawater ground to be made in the end array.

A. Assemble Cable Connector

The end array will be connected to a length of cable using a custom head connector (Appendix III). We suggest that this connector be constructed of naval brass or bronze to allow for a seawater ground; alternatively, this connector could be made using inexpensive PVC. To prepare the connector for a seawater ground, apply a lug terminal to a short length of cable and screw this into the head connector (Fig. 8a). This length of cable will be connected to a wire within the cable to provide a seawater ground for the entire system.

Rough up the cable with sandpaper, and apply electrical tape 14” from the end of the cable to build up a ¾” band. Clean cable and connector and insert the cable into the head connector, twisting the connector so it fits snugly around the tape band (Fig. 8b).

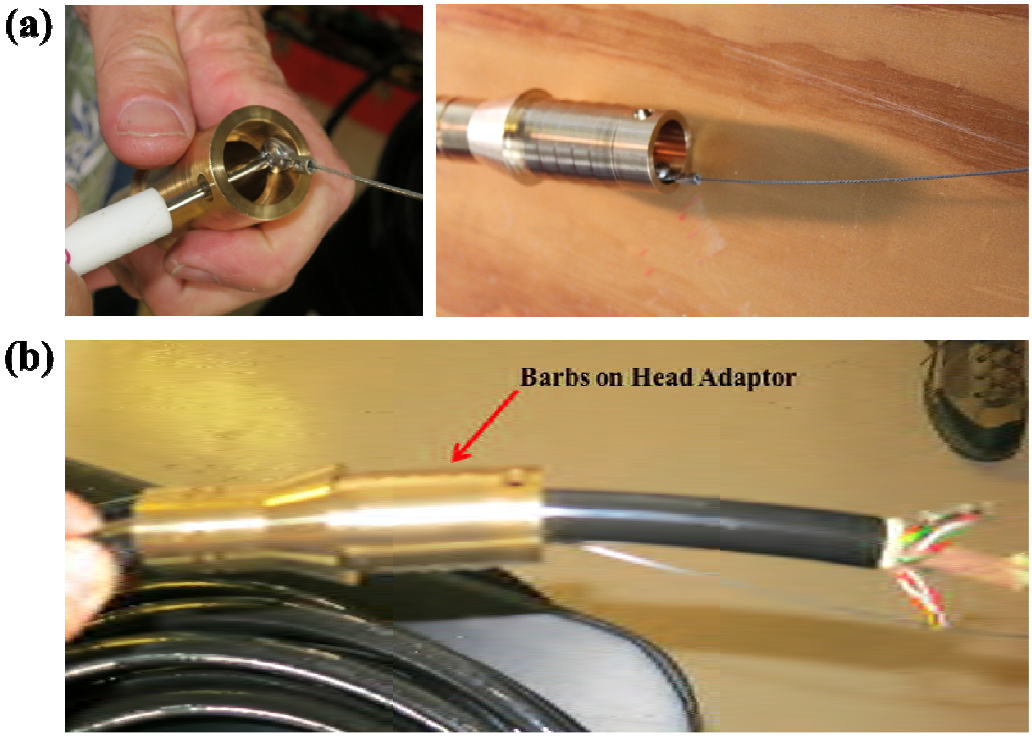

Figure 8. Head adapter for end-array including (a) connection of steel wire for seawater ground and (b) insertion of connector over length of cable. Barbs on head adaptor (b) are for improved gripping surface for tubing.

Coat the inside of a 4” section of array tubing with silicon spray and fit over the barbed end of the connector, taking care that silicon spray does not get on the cable jacket or inside the connector (Fig. 9a). Hang the cable/head connector vertically and pour in 3M Scotchcast 2130 potting compound so that the compound completely covers the end of the cable (Fig. 9b). This step attaches the head connector to the cable, and isolates the Kevlar from the oil within the array. Allow this to dry (~ 4 hrs), then attach the cable end of the connector using the same type of epoxy. Place the cable/connector assembly horizontally in a table vise, using half of a mold for a small 3M Scotchcast 2130 splice kit (Fig. 9c). Seal either end to prevent leakage, and carefully pour in the epoxy, ensuring that bubbles are not trapped within the mold. Let dry a minimum of 4 hours and remove the short tubing and mold (Fig. 9d).

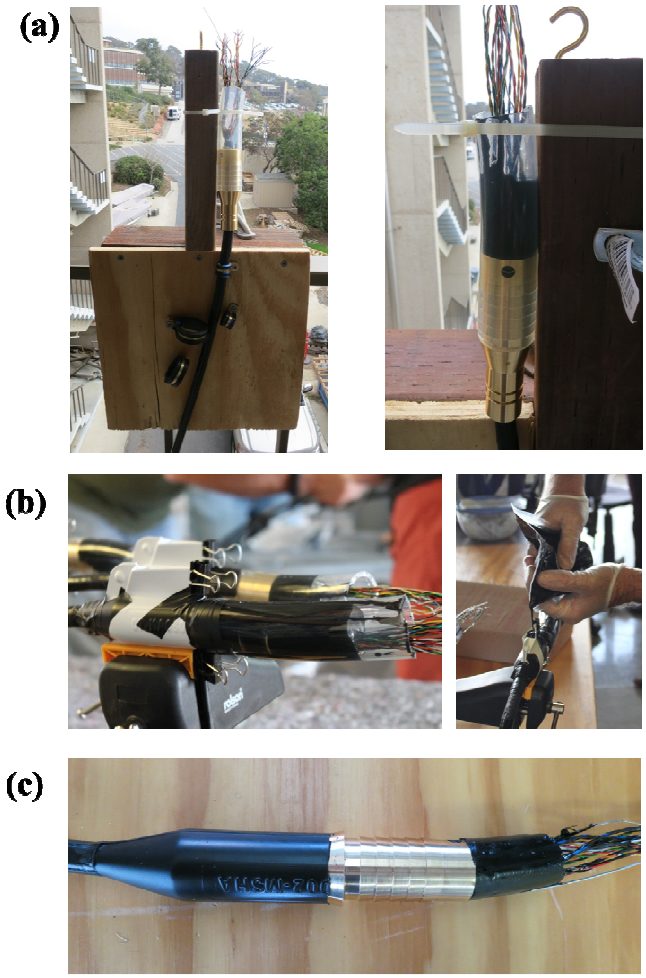

Figure 9. Preparation of cable and head connector assembly for end-array, including (a) vertical placement of head connector with short tubing and application of epoxy, (b) horizontal placement of head connector with and application of epoxy, and (d) the final prepared head connector for the end-array.

B. Component Placement and Wiring

The stiff stainless steel cable will provide a stable (and yet flexible) mounting point for all components, which should be placed in the general configuration shown in Figure 10a. The components will be attached to the cable and the distances between hydrophones will be measured as precisely as possible (see D1, D2, D3, and D4 in Fig. 10a). Ideally, there will be no movement of the hydrophone elements relative to each other. This is critical for accurate localization.

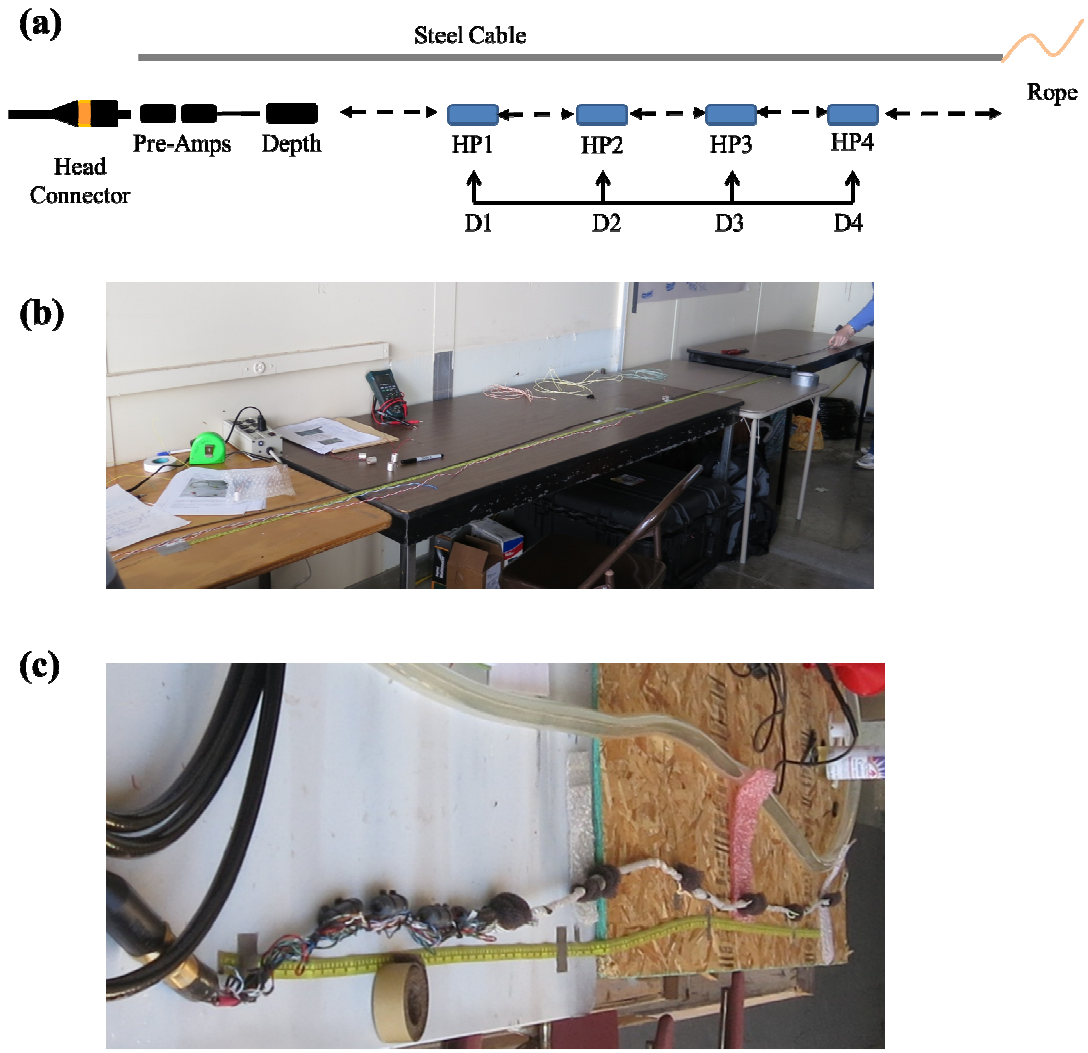

Figure 10. Layout for end-array assembly including: (a) schematic of overall layout, (b) initial preparation of cable, wires, and measurement tape, and (c) final placement of components.

Lay out the stainless steel cable to the desired length (Fig. 10b). Leave at least 1 foot excess at the end, and attach a piece of small rope or cord to the end (this should be at least a few inches longer than the tubing, as it will be used to pull the entire assembly through the tubing). Measure exact points of placement for hydrophones, and solder extra 24-awg PTFE wire (in twisted pairs, preferably following the same colors in the cable) to the cable at lengths that will provide sufficient wire to solder to each component, with a little extra (Fig. 10c). Then solder the components to the appropriate wires in the approximate positions (Fig. 10d).

(a)

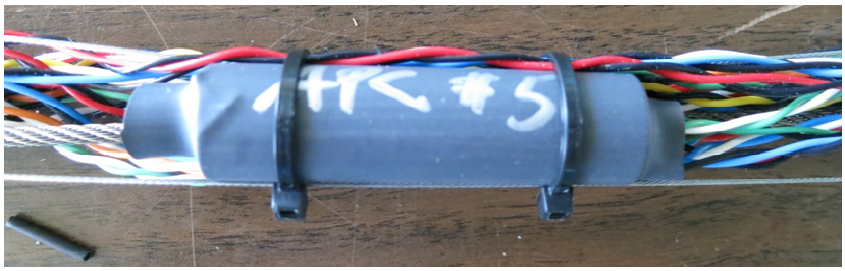

(b)

Figure 11. Pre-amp and depth sensors should be (a) attached to the steel cable using electrical ties and (b) together at the front end of the array assembly.

Note that the pre-amps and depth sensor should be placed at the forward end of the end-array, near the cable attachment (Fig. 10a). These components should be connected to the steel cable using electrical ties (Fig. 11a), and they should be placed close together at the head of the steel cable (Fig. 11b).

All through-wires and the steel cable should go through the center of the cylindrical hydrophone (Fig. 12a). The wires and steel cable are threaded through the center of the cylindrical hydrophone (Fig. 12b). A piece of cork with adhesive is wound around these items in the position of the hydrophone placement and at a thickness that will hold the cylindrical hydrophone in place (Fig. 12c). Positioning of hydrophones at point of final attachment should be measured as precisely as possible (see Fig. 10a). When the hydrophones are in position, place open-cell foam on either side of the hydrophone element (Fig. 12c). This will help position the assembly in the center of the tubing and prevent the hydrophone element from touching the sides of the tube.

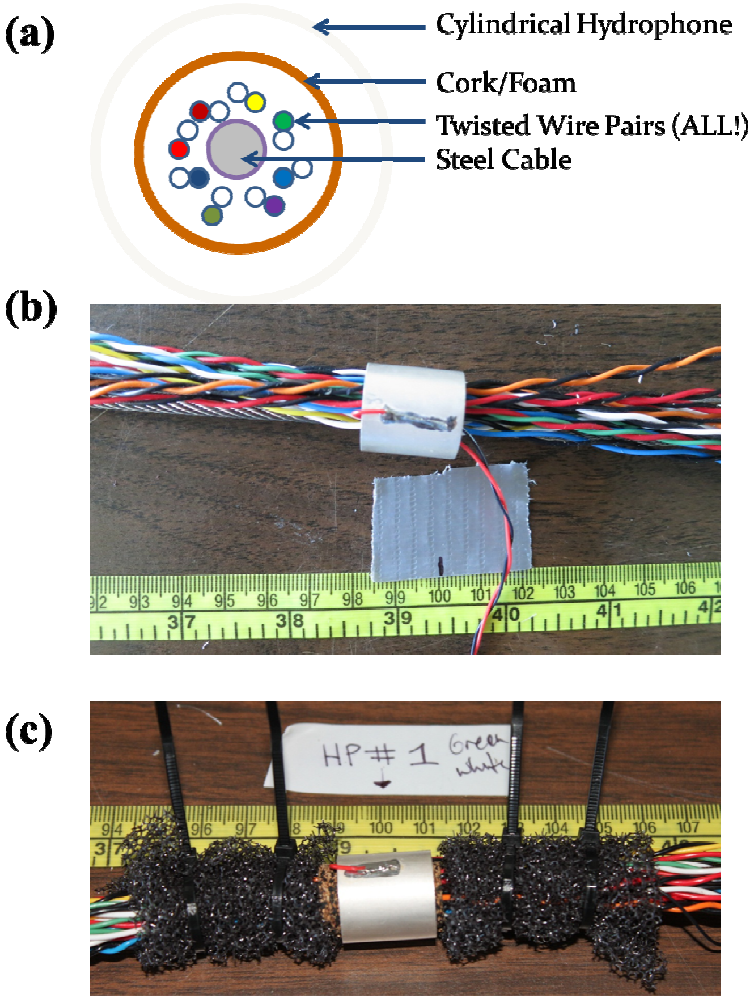

Figure 12. Layout for cylindrical hydrophone placement including: (a) schematic showing placement of wires and steel cable within the cork, (b) approximate positioning of cylindrical hydrophone with wires and cable going through the center, and (c) final placement of hydrophone over the cork and centered at the measured position with foam on either side of hydrophone element.

Factory potted hydrophones complete with wires can be attached to the array assembly by positioning the hydrophone element in the appropriate location and placing open cell foam or netting positioned around the hydrophone element to help keep it in place (Fig. 13).

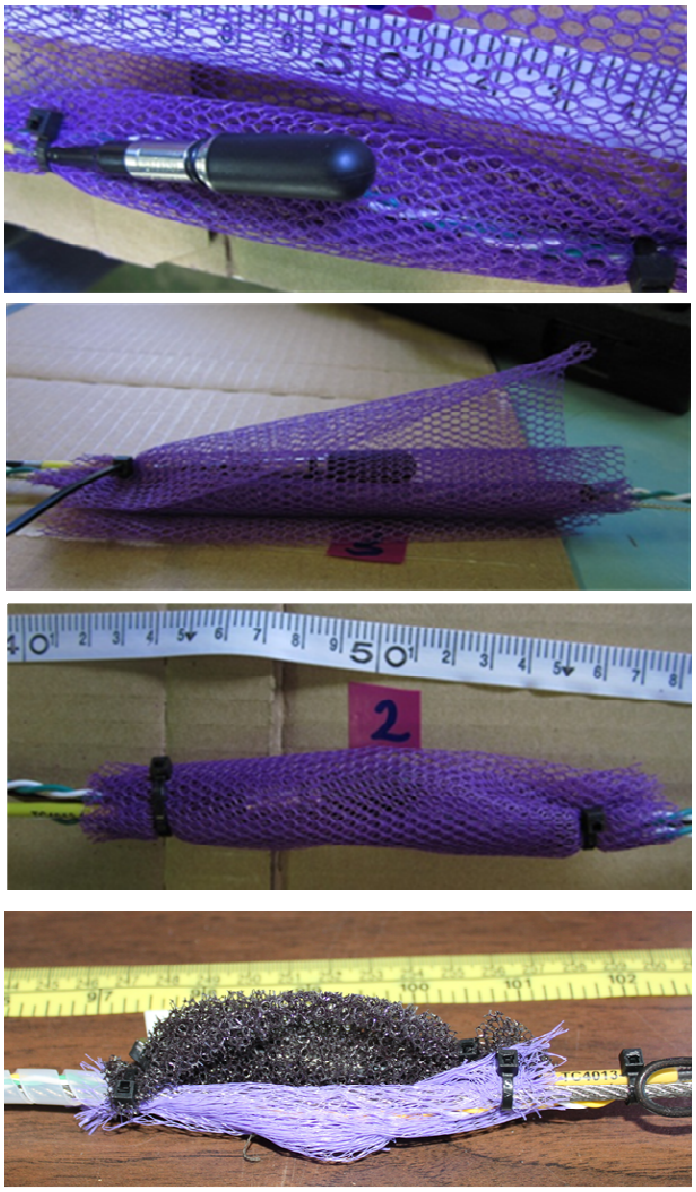

Figure 13. Placement of potted hydrophone on the array assembly.

C. Insert Components into Tubing

When all components are firmly attached to the steel cable and all measurements are accurately made, the array assembly should be tested to ensure that all components are functional. The array assembly can then be placed in the tubing, and the tube filled with oil and capped.

First, thread the rope/cord attached to the steel cable through the tubing. Lubricate the tube with castor oil and gently pull the cord on the far end of the tubing to pull the array assembly through the tubing. Add oil as necessary to lubricate the components so that they slide inside the tubing and do not move relative to the steel cable. Continue pulling until the entire array assembly has been pulled through the plastic tubing. Work the tubing up over the barbs on the head of the brass connector until it is completely flush against the edge of the head connector. Thread a heat-shrink hose clamp over the array tube, and place over the tubing on top of the barbs at the head connector (in this case, the heat-shrink tubing does not need to be threaded on before the tubing is placed over the connector). Apply heat to heat-shrink hose clamp using a heat gun until the hose clamp secures the array tubing on the head connector barbs. Test all components again to ensure that they are all functioning (it is possible that wires or components could be damaged during this procedure).

Figure 14. Array assembly should be hung vertically and filled with castor oil using a funnel.

Hang the entire array assembly vertically, and secure the tubing so that it will not move (Fig. 14). Using a funnel, pour castor oil in slowly, allowing air bubbles to rise. Due to the viscosity of the castor oil, this process can take hours. Allow the oil-filled array to set for hours (preferably overnight) and top off the remainder of the tubing with oil. Bubbles often get trapped in the foam and mesh surrounding the components, and it is helpful to tap or gently squeeze these areas occasionally to assist in the release of the air bubbles.

Place the remainder of the cord into the tubing and place the end connector inside the tubing and place the cap on the end of the tubing (Fig. 15). Clean all oil from the outside of the tube and connector and place a heat shrink hose clamp over the tube at the point it covers the end connector barbs (Fig. 15). If necessary, top off with oil through hole in end of end cap and then carefully insert the screw to seal the end cap (Fig. 15).

Figure 15. Once oil array is filled, end cap is put on the tubing, with a heat shrink hose clamp over the tubing at the position of the barbs. The screw is then placed in the end cap and tightened.

METHODS: INLINE ARRAY CONSTRUCTION

A. Assemble Connector

The inline array is constructed with a connector at *each* end of the array, allowing for attachment along the length of the towed array assembly. Because it is 'inline', it is critical that all wires within the array are continuous and connected to each end connector. Unlike the end array connector, which is permanently spliced into the underwater cable, the in-line connectors consists of several components that must be put together into an assembly which is then attached to the tow cable connector. Each connector/side of the inline array consists of a bulkhead connector (Teledyne Impulse MHDM-BCR) with the wires terminated within the connector (Fig. 16a), a tension disk to hold steel cables running the length of the array for strength (Fig. 16b), and a custom brass adapter that will allow the connector to attach to the tubing ('Adapt-o-Matic', Fig. 16c and Appendix IV).

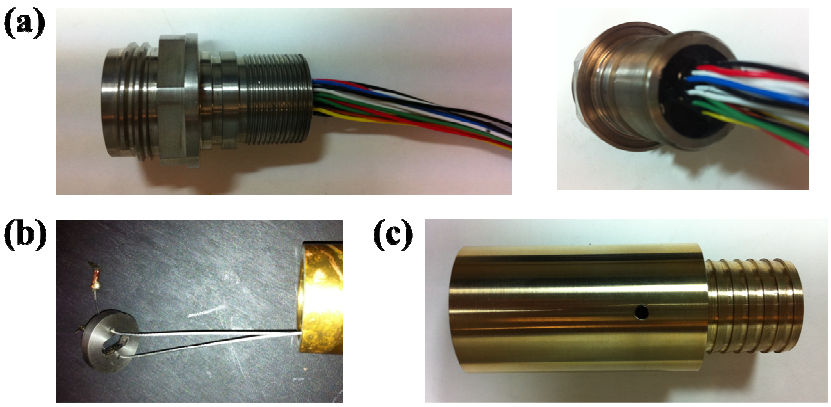

Figure 16. Connector assembly components for the inline array, including (a) Teledyne Impulse MHDM-BCR bulkhead connectors with molded hook-up wires, (b) tension disk that fits inside the adapter with tension cables, and (c) Adapt-o-matic custom adaptor.

The Teledyne Impulse MHDM-BCR connector should be purchased with wires molded to the connector; we suggest 24-awg PTFE/TFE (Teflon) wires. As the wires will need to go through, from one connector to the other, we suggest that the wires molded to one of the connectors be long enough to span the entire length of the array, while the second connector can have a shorter length of wires attached to it. These lengths will depend on the overall length of your array.

Each connector will have a tension disk that will lay flat inbetween the Teledyne Impulse MHDM-BCR connector and the Adapt-O-Matic (Fig. 16b, 17a, Appendix IVb). The tension wires will be connected to the tension disk on the connector side using wire crimps with solder for added strength. During initial construction only one tension disk and tension wire assembly will be made. The second tension disk and wire connection will be made during the final assembly of the inline array.

To attach the tension wires to the tension disk, place a single wire through each of the holes on the tension disk. Crimp the ends so that they cannot fit back through the holes, and then add some solder to the crimped connector for good measure (Fig. 16b).

(a)

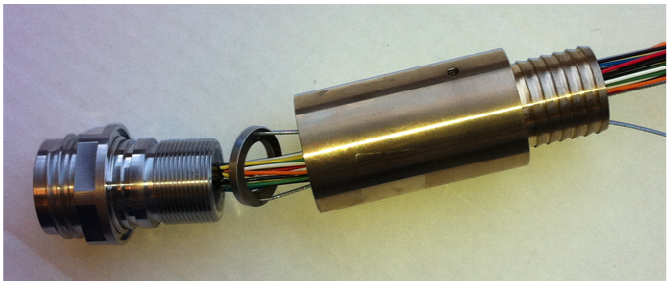

(b)

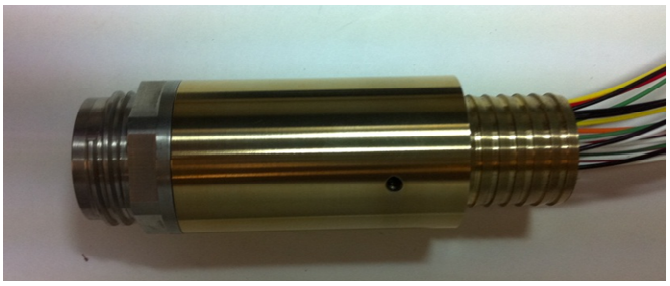

Figure 17. Connector assesmbly shown (a) with components in line and (b) with components screwed together and in place.

Once the connector/tension disk/Adapt-o-Matic assembly is complete, all wire pairs must be twisted. This is not a job for the meek; do not underestimate the time it will take to complete this simple task. We suggest using a power drill to twist the wires (Fig. 18). Once the wire pairs are twisted, crimp a terminal to the tension wire. This will be used to hold an electrical tie, which will serve to cinch up the tension wires so that they do not put pressure on the cylindrical hydrophones. Repeat for the wires on the other connector (Note: you can put the wires through the center hole in the tension disk to keep it in place; however, the tension wires will be secured to this second tension disk during final assembly). Once the entire connector is assembled, put a set screw into the access hole in the Adapt-o-Matic.

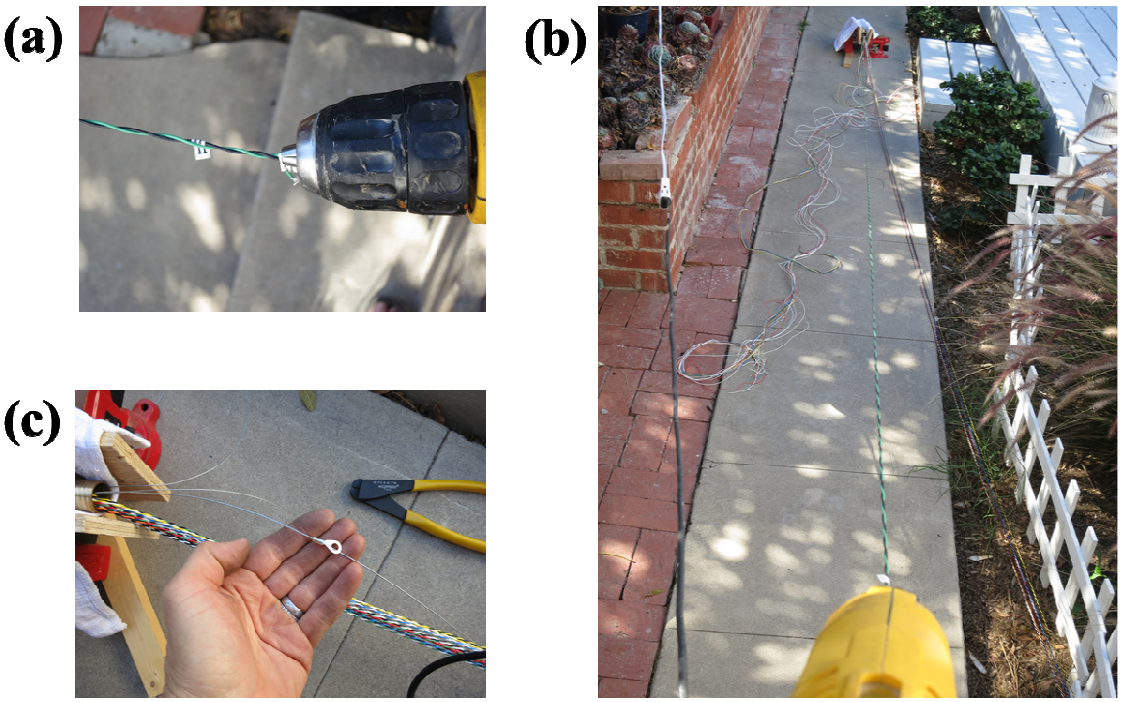

Figure 18. Twist paired wires by (a) pinching wires in electric drill and (b) twisting wires until they are twisted along the entire length. Wires should be secured to keep them from un-twisting. A terminal should be crimped to the tension wire to hold an electrical tie (c).

B. Component Placement and Wiring

The hydrophone array placement will be secured to the connector assembly with the long wires attached (Fig. 19). Component placement and wiring will follow the same as in the inline array (see Fig. 10) with a few exceptions, which will be noted here.

As in the end array, a thick steel wire will be used to arrange the hydrophones and keep them in place. The steel will 'float' within the array, but it will be held in place with electrical ties (Fig. 19a). In order to allow the tension wires to go through the center of the cylindrical hydrophones without putting any outwards pressure on the hydrophone, an electrical tie will be attached at the small terminal that was crimped onto the tension wire (Fig. 18c). This will ensure that the electrical cable stays in place.

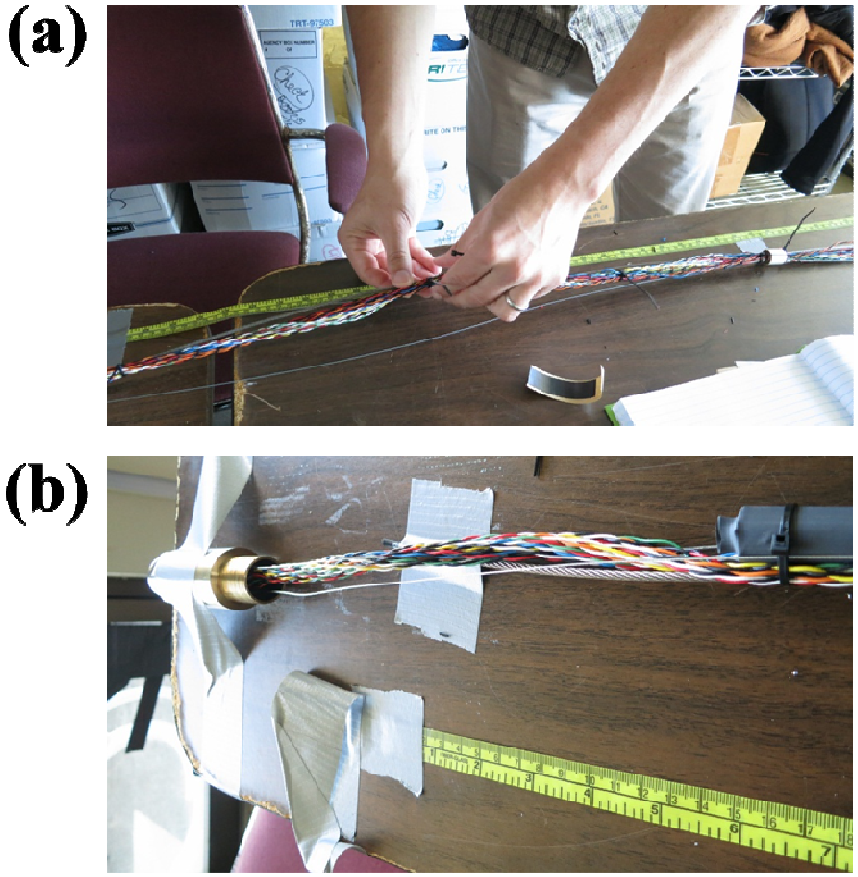

Figure 19. All wires in the inline array will go from end to end; all wires and steel cable must go through the cylindrical hydrophone elements and will be held in place using electrical ties that will connect it to the thick stainless steel cable (a). The stainless steel cable is loose in the inline array and the thin tension cables will be connected to the tension disk at either end (b).

When connecting the pre-amps, you will need to snip each of the appropriate wire pairs, and solder ***both*** ends to the appropriate wire on the pre-amp creating an in-line wire connection. This will allow the array to be hooked up in either orientation. The hydrophones themselves will be connected directly to the pre-amp input (in the same manner as the end array).

C. Insert Components into Tubing

When all components are firmly attached to the steel cable and all measurements are accurately made, the array assembly should be tested to ensure that all components are functional. The array assembly can then be placed in the tubing, the wires spliced to the wires for the second connector, and the tube filled with oil and capped. Follow the

instructions for pulling the array assembly through the tubing (Section IIIC). Once the entire assembly is set within the tubing, place a set screw in the access hole in the Adapt-o-Matic. Seal the tube to the outside of the Adapt-o-Matic with a heat shrink hose clamp and test all components to verify that they are functional.

To size the length of the tension cable, straighten out the entire array assembly and align the adapter to the place where it will fit into the tube (DO NOT put the adapter into tube! It will be very difficult to remove!). The tension ring will sit in the adapter at a place right above the oil fill plug. Holding the array straight as possible and pulling the tension cables tight, mark the place where the cables will pass through the tension ring (right above the oil fill plug). This will provide a reference point for where the cables should be crimped during final assembly. An easy way to mark the wires is to just put a bend in the place where they should be crimped. The length of the tension wires should be as close to perfect as possible, to ensure that they provide the strength required. To continue the final assembly, coil the array tubing, which will provide slack in the tension wires. With the tension wires slack, feed the wires through the Adapt-o-Matic on the second connector, and through the holes in the second tension disk. Crimp and solder the tension wires at the marked position, if this is done correctly, the tension wires should become taut when the array is straightened. Put the tension disk in position (making sure that the disk lies flat against the lip in the Adapt-o-Matic), and screw the MHDM-BCR connector to the Adapt-o-Matic.

All wires exposed at the open end of the array tube should be soldered to the appropriate wires molded to the second connector (note: these wires should be in twisted pairs). There should be sufficient excess to allow for access in case of a rebuild or repair (see Fig. 20). Once the entire assembly is complete, test all components from either end to verify that they are functioning. The assembly is now ready to be filled with oil.

Figure 20. Array assembly should be hung vertically and filled with castor oil using a funnel. Support the connector and excess wires during this process to prevent damage.

Hang the entire array assembly vertically, and secure the tubing so that it will not move (Fig. 20). With the inline array, the excess wires and the connector assembly should be supported to prevent damage. Using a funnel, pour castor oil in slowly, allowing air bubbles to rise. Due to the viscosity of the castor oil, this process can take hours. Allow the oil-filled array has set for hours (preferably overnight) and top off the remainder of the tubing with oil.

Place the excess wires of the second connector assembly inside the tubing and place the cap on the end of the tubing. Clean all oil from the outside of the tube and connector and place a heat shrink hose clamp over the tube at the point it covers the end connector barbs (see Fig. 15). Do one final end-to-end test to verify that all components function from either end.

RESULTS AND DISCUSSION

The purpose of this report is to present a description of methods for constructing a flexible modular towed hydrophone array that will allow for improved localization options. This system can be repaired in the field and modifications can be made to this system to allow for improvements in technology.

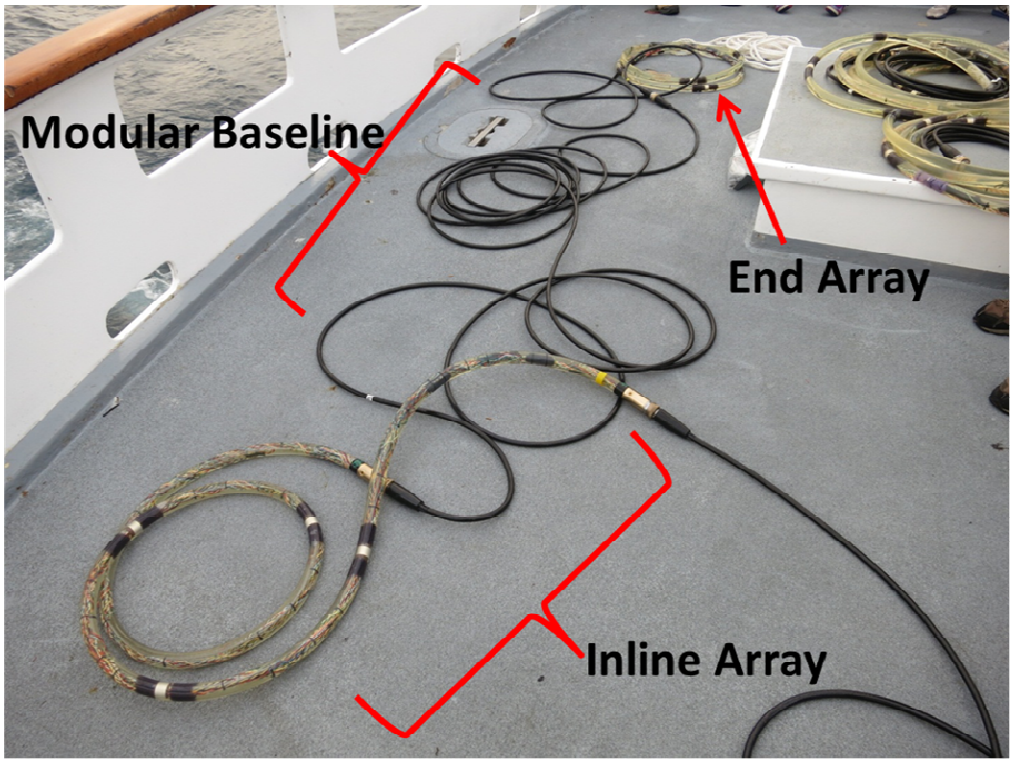

Figure 21. Photo of fully constructed towed hydrophone array (including inline array, modular baseline, and end array)

The modular nature of this design allows for multiple options in its use (see Fig. 1, 21), with different configurations providing different localization options. We have developed this system to use the Miniature High Density (MHDM-26) connectors by Teledyne Impulse, but modification to the custom Adapt-o-Matic could be made to allow for different connectors to be considered. In order to use the entire system as designed, this would require a tow cable with a MHDM-CCP connector, the inline array with MHDM-BCR connectors, a modular baseline (consisting of two MHDM-CCP connectors molded to a length of cable), and a MHDM-CCR connector molded to a length of cable for the end array. We suggest that all connectors molded to cable provide Kevlar termination to allow for preservation of the strength member. We also suggest purchasing the pressure caps for all connectors to protect the connectors from damage. We suggest purchasing high quality cable with internal Kevlar strength members (minimum 400 lbs) and an interstices waterblock. The cable length, number of wires and wire characteristics will vary depending on your needs.

RESOURCES

Information provided in this report is current as of publication; however, changes in technology and industry sources will soon make this information dated. Rather than present information that will provide the reader with specific resources (which will soon be outdated), we have tried to present the reader with sufficient information such that they could obtain the materials on their own. We are unable to provide any additional support outside of that presented in this publication.

ACKNOWLEDGEMENTS

Funding for this project was provided by the Advanced Science and Technology Working Group (ASTWG) of the National Oceanographic and Atmospheric Administration. We are grateful to the scientists at NOAA who assisted in the PAM hardware workshop that was the predecessor to this report. Marla Holt, Danielle Cholewiak, Tina Yack, and Jennifer Keating provided revisions to an earlier version of this manuscript. Cory Hom-Weaver provided many of the photos used in this report.

APPENDIX I. Parts List

Table 1. Partial list of Pre-Amp components, quantities are listed per pre-amp

Item	Description	Comments
op-amp, OPA1632D		
resistor, 100 ohm	axial, metal film, 1/4 or 1/8 watt, 1% tolerance	
resistor, 100 K ohm	axial, metal film, 1/4 or 1/8 watt, 1% tolerance	For Reson Hydrophones
resistor, 22 k ohm	axial, metal film, 1/4 or 1/8 watt, 1% tolerance	For APC Hydrophones
resistor, 1 M ohm	axial, metal film, 1/4 or 1/8 watt, 1% tolerance	
capacitor, tantalum, 0.1 uF	radial, 50v tantalum, 10% tolerance	
capacitor, tantalum, 0.22 uF	radial, 35v tantalum, 10% tolerance	
capacitor, tantalum, 10 uF	radial, 35v tantalum, 10% tolerance	
diode, 1N4001G		
custom printed board	Differential Preamp Duo v2.123	Install software sunstone.com, request quote# PQ0299119
1/2" copper pipe		sold in ~2 ft pieces
3M DP270 Scotch-Weld Epoxy	to pot pre-amps	Requires epoxy gun and mix nozzle applicators

Table 2. Partial list of components for array assembly.

Item	Description	Vendor	Part Number	Comments
Hydrophones: calibrated high frequency	high frequency hydrophone	Reson.com	TC 4013	
Hydrophones: mid-frequency	cylindrical piezo tube	APC International	42-1021	
Depth sensor	oem pressure transducer	kelleramerica.com	PA7FLE (100720.0059)	order by phone
Hookup wire	24 awg, stranded, PTFE/TFE, assorted colors			
Steel cable: array positioning	secure elements in array	McMaster-Carr	3458T47	
Steel cable: tension wires	tension wires, stranded 1x7, 1/32", 185# breaking strength	McMaster-Carr	3498T41	
Cork	secure cylindrical hydrophones to array	McMaster-Carr	94545K19	
Array tubing	1" ID, 1 1/4" OD polyurethane ETHER tubing Water-Resistant Clear Ether-based Polyurethane Tubing	McMaster-Carr	5195T84	
Heat shrink hose clamp	Shrink-to-Fit Plastic Coolant Hose Clamp (1-3/16" to 1-1/2" Diameter Range, 1" Band Width)	McMaster-Carr	5470K16	
Epoxy/Splice Kit	waterproof epoxy for mounting end array adaptors	3M	3M 2130	
Connector for inline array	underwater bulkhead connector	Teledyne Impulse	MHDM-26-BCR	Quantity = 2 per inline array
Connector for end array	molded underwater connector	Teledyne Impulse	MHDM-26-CCR	Note: molded to customer supplied cable w/ 400 lb kevlar termination

APPENDIX II. Array Depth Measurement

The depth of an oil-filled array can be measured using a pressure transponder that is submersed in the oil. The pressure in the oil will be the same as the water pressure (this is not true of solid-urethane hydrophones). Use a pressure transponder that measures pressure using a 4-20 milliamp scale (e.g. Keller model # PA7FLE). When a voltage is applied to the positive wire, the current will be proportional to the depth. The current will be 4 mA at the surface and 20 mA at the maximum rated depth of the transponder (for example 20 Bar or approximately 200 m). You can use a 9v battery and a digital multi-meter to measure this current. Because this device uses electronics, you cannot reverse the wires. The positive wire needs to be attached to the positive side of the battery. The current can be translated to depth using a simple formula. For a 20 Bar transponder:

$$\text{Depth (m)} = [\text{current (mA)} * 12.5] - 50.$$

To display and record depth data on a computer, you need to use an Analog-to-Digital (A/D) converter (e.g. Measurement Computing model # USB-1208LS). This device measures voltage, not current. You can measure the voltage drop over a resistor to measure current if you put a 100 ohm resistor in series with the depth transponder (see figure). Ohm's law says that the voltage drop (V) over a resistor is equal to the product of the resistance in ohms (R) and the current (I):

$$V = I * R$$

So, with a 100 ohm resistor, voltage will be 100 times the current in amps. The equation for depth is therefore:

$$\text{Depth (m)} = [\text{voltage (V)} * 125] - 50.$$

The Measurement Computing 1208LS can be used in single-ended (grounded) or differential mode. The latter measures the voltage difference between the two pins but does not ground one of the pins. This is less likely to introduce noise from the computer or the A/D device itself into the array cable. You can change this setting with the Instacalc software included with the 1208LS. You can also set the voltage range to give the best resolution using PamGuard's depth setup window or Logger's database. Voltage across the resistor will not exceed 2 volts, so you can chose the +/- 2.5V scale.

Array Depth Gauge Wiring

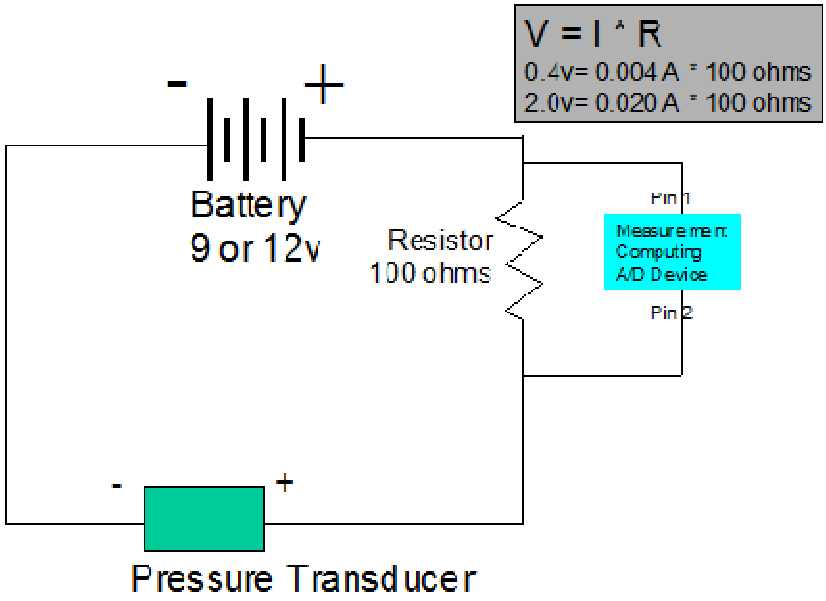

4-20 milliamp (mA) = 0.004-0.020 A = 0-20 Bar = 0-200 meters

APPENDIX III. Schematic for Custom Adaptors for End Array

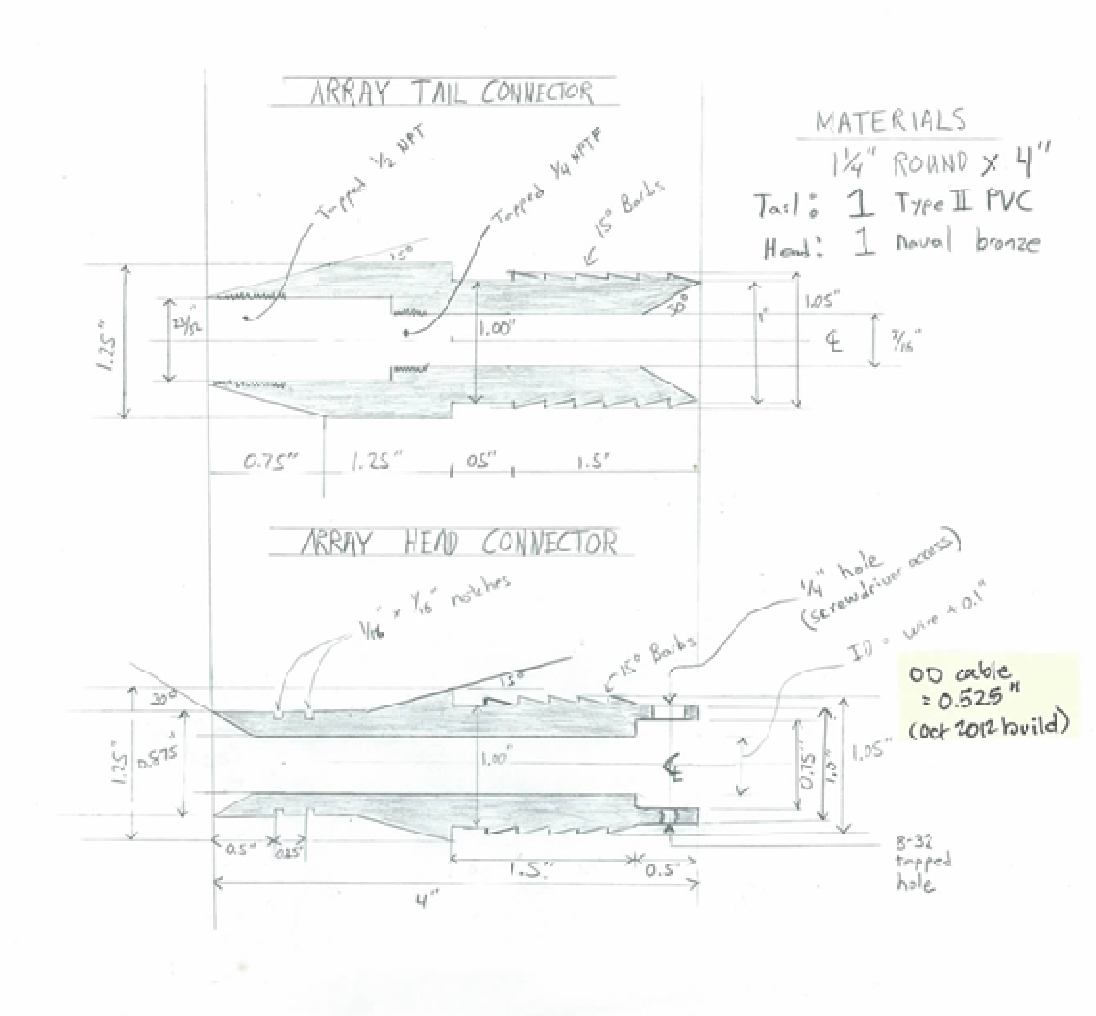

APPENDIX IV. Schematic for Custom Adaptors for Inline Array

A. Adapt-o-Matic

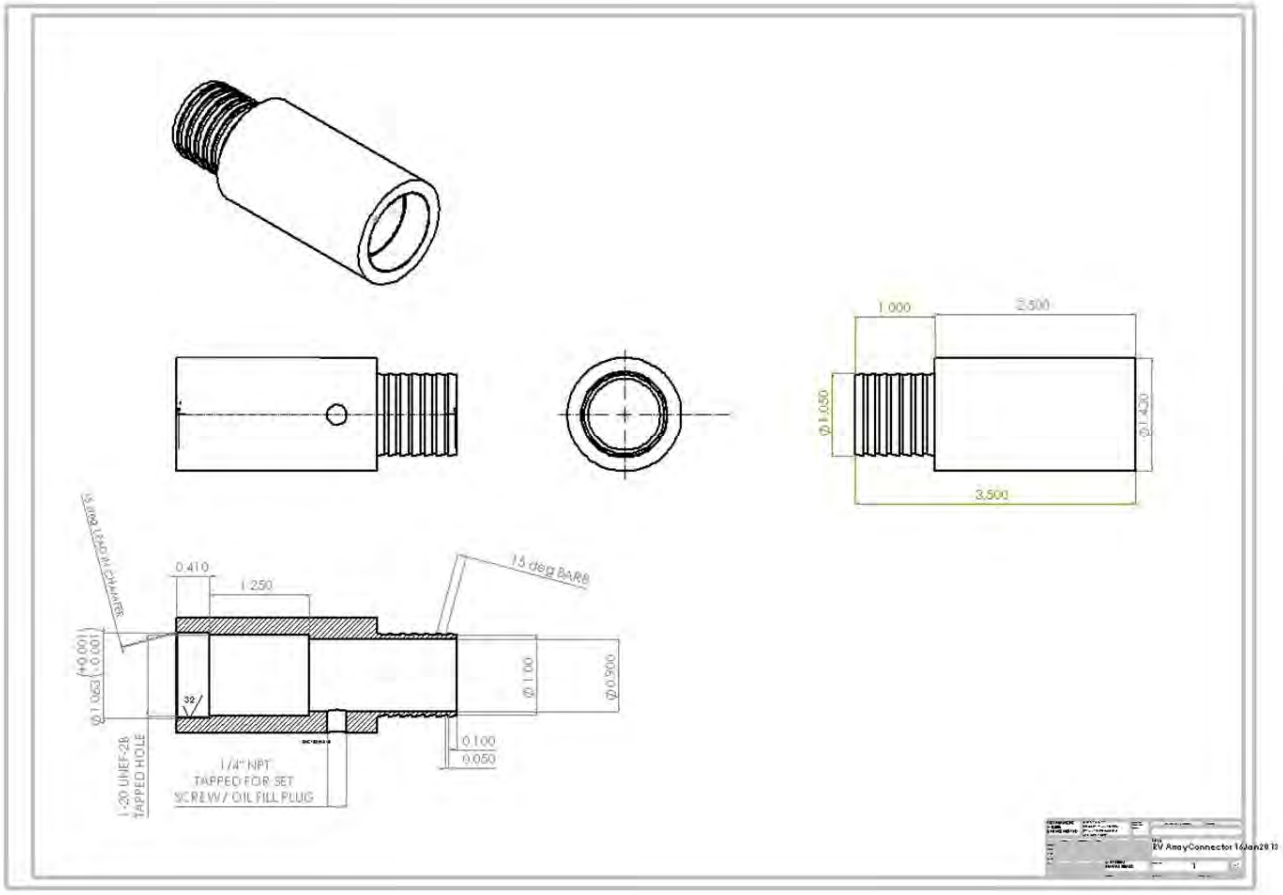

B. Tension Disk

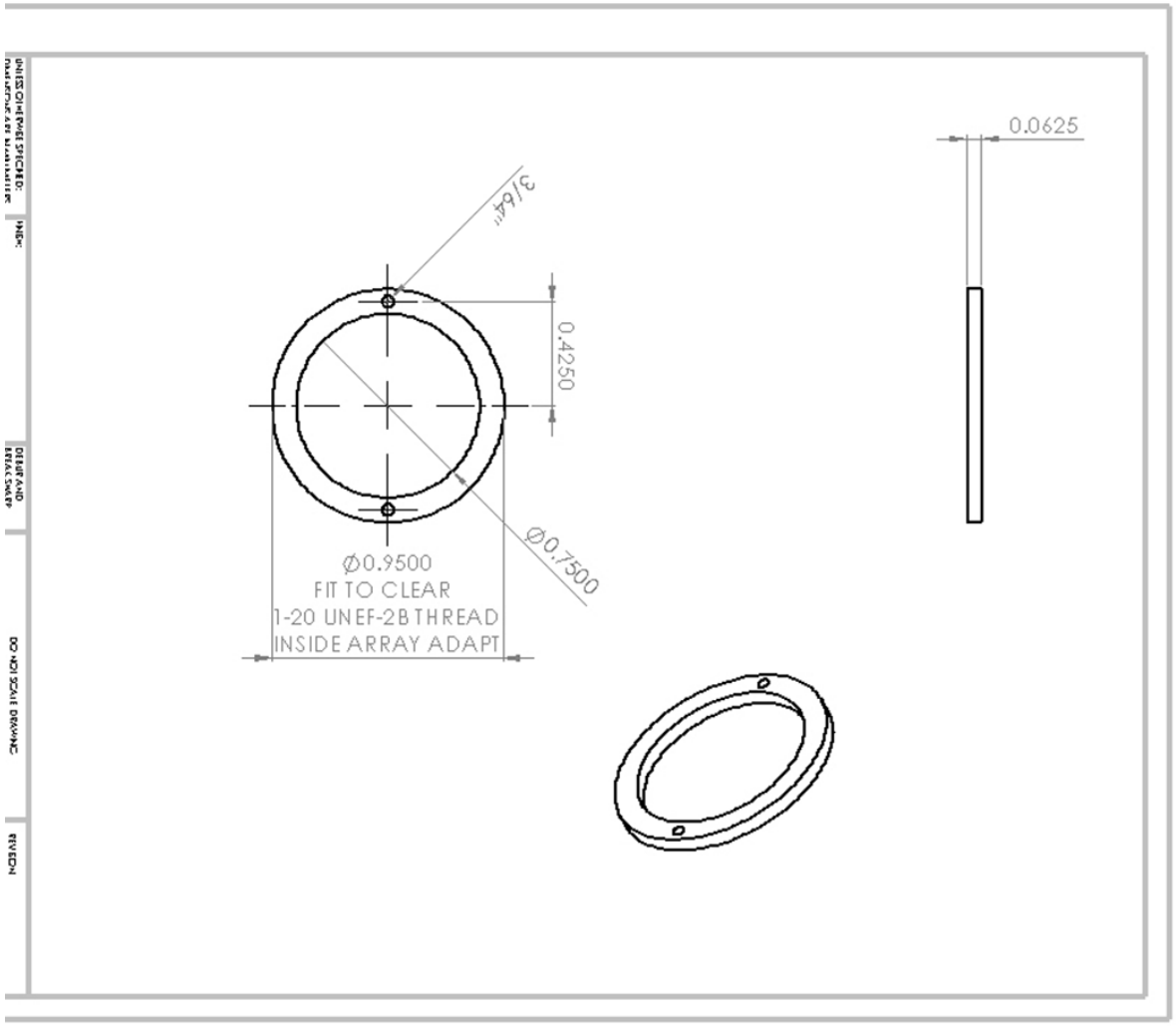

RECENT TECHNICAL MEMORANDUMS

SWFSC Technical Memorandums are accessible online at the SWFSC web site (http://swfsc.noaa.gov). Copies are also available from the National Technical Information Service, 5285 Port Royal Road, Springfield, VA 22161 (http://www.ntis.gov). Recent issues of NOAA Technical Memorandums from the NMFS Southwest Fisheries Science Center are listed below:

NOAA-TM-NMFS-SWFSC-501 Assessment of the Pacific sardine resource in 2012 for U.S. management in 2013.
K.T. HILL, P. R. CRONE, N.C.H. LO, D.A. DEMER, J.P. ZWOLINSKI, and B.J. MACEWICZ
(December 2012)

502 Upper Klamath and Trinity River Chinook salmon Biological Review Team report.
T.H. WILLIAMS, J.C. GARZA, N.J. HETRICK, S.T. LINDLEY, M.S. MOHR, J.M. MYERS, M.R. O'FARRELL, R.M. QUINONES, and D.J. TEEL
(December 2012)

503 Proceedings of the National Marine Fisheries Service Productivity Workshop, Santa Cruz, California, June 11-12, 2012.
A.T. MAMULA and J.B. WALDEN
(December 2012)

504 U.S. Pacific Marine Mammal Stock Assessments: 2012.
J.V. CARRETTA, K.A. FORNEY, E. OLESON, K. MARTIEN, M.M. MUTO, M.S. LOWRY, J. BARLOW, J. BAKER, B. HANSON, D. LYNCH, L. CARSWELL, R.L. BROWNELL JR., J. ROBBINS, D.K. MATTILA, K. RALLS, and M.C. HILL
(January 2013)

505 Spawning biomass of Pacific Sardine (*Sardinops sagax*) off U.S. in 2012.
LO, N.C.H., B.J. MACEWICZ, AND D.A. GRIFFITH
(March 2013)

506 Probability of taking a western North Pacific gray whale during the postponed Makah hunt.
J. E. MOORE, and D. W. WELLER
(March 2013)

507 Report of the National Marine Fisheries Service gray whale stock identification workshop.
D. W. WELLER, S. BETTRIDGE, R. L. BROWNELL JR., J. L. LAAKE, J. E. MOORE, P. E. ROSEL, B. L. TAYLOR, and P. R. WADE
(March 2013)

508 Inferring trackline detection probabilities from differences in apparent densities of beaked whales and dwarf & pygmy sperm whales in different survey conditions.
J. BARLOW
(April 2013)

509 Evaluation of an automated acoustic beaked whale detection algorithm using multiple validation and assessment methods.
E.K. JACOBSON, T. M. YACK, J. BARLOW
(March 2013)

510 Handbook for recognizing, evaluating, and documenting human interaction in stranded cetaceans and pinnipeds.
MOORE K. T. and S. G. BARCO
(March 2013)