ANADROMOUS SALMONID PASSAGE FACILITY DESIGN

NATIONAL MARINE FISHERIES SERVICE
NORTHWEST REGION
www.nwr.noaa.gov

FEBRUARY 2008

ACKNOWLEDGMENTS

Bryan Nordlund, National Marine Fisheries Service (NMFS) Hydraulic Engineer, is the primary author of this document. He was assisted by Larry Swenson, Hydraulic Engineer; Melissa Jundt, Hydraulic Engineer; Ed Meyer, Hydraulic Engineer; Scott Carlon, Fishery Biologist; and John Johnson, Hydraulic Engineer; all with NMFS. In addition, he was assisted by Steve Rainey, GEI Consultants, Inc.

Reviews were provided by Denny Hudson, U.S. Bureau of Reclamation; Pat Powers and Tom Burns, Washington Department of Fish and Wildlife; Ray Hartlerode, Tom Stahl, and Bernie Kepshire, Oregon Department of Fish and Wildlife; Lynn Stratton and Matt Hightree, Idaho Department of Fish and Game; and Ken Bates, Koszmo, Inc.

Suggested changes, additions, or questions should be directed to Bryan Nordlund at Bryan.Nordlund@noaa.gov for consideration in updating this document.

Assistance from NMFS fish passage specialists can be obtained by contacting the NMFS Northwest Region Hydropower Division at 503-230-5414.

Suggested citation:

NMFS (National Marine Fisheries Service). 2008. Anadromous Salmonid Passage Facility Design. NMFS, Northwest Region, Portland, Oregon.

TABLE OF CONTENTS

TABLES AND FIGURES

ACRONYMS AND ABBREVIATIONS

AWS	auxiliary water supply
cfs	cubic feet per second
COE	U.S. Army Corps of Engineers
EPRI	Electric Power Research Institute
ESA	Endangered Species Act
FERC	Federal Energy Regulatory Commission
FPA	Federal Power Act
HGL	hydraulic grade line
HGMP	Hatchery and Genetic Management Plan
MSA	Magnuson-Stevens Fishery Conservation and Management Act
NMFS	National Marine Fisheries Service
NWR	Northwest Region
PESBS	Positive-exclusion screen and bypass systems
PIT	passive integrated transponder
ppm	parts per million
R/D	ratio of bypass pipe center-line radius of curvature to pipe
VBS	Vertical barrier screens
WDFW	Washington Department of Fish and Wildlife

FOREWORD

The National Oceanic and Atmospheric Administration's National Marine Fisheries Service (NMFS) is charged by Congress to manage, conserve, and protect living marine resources within the United States Exclusive Economic Zone. NMFS also plays a supportive and advisory role in the management of living marine resources in areas under state jurisdiction. Among these living marine resources are the Pacific anadromous salmonids (salmon and steelhead) which have tremendous economic, cultural, recreational, and symbolic importance to the Pacific Northwest (NRC 1996).

Anadromous fishes reproduce in freshwater and the progeny migrate to the ocean to grow and mature and return to freshwater to reproduce. Salmon and steelhead cross many geographic and human boundaries during their freshwater migration. It is an arduous journey; some species migrate hundreds of miles each way in freshwater and thousands of miles while in the ocean. In addition to the challenge of covering great distances, most species must navigate many barriers during migration. Migration barriers—complete blockages and poorly functioning passage facilities—are a significant factor affecting most salmon populations in the Pacific Northwest.

Any independent Pacific salmonid (genus *Oncorhynchus*) population is considered viable when it can withstand threats and risk of extinction from demographic variation, local environmental variation, and genetic diversity changes over a 100-year timeframe (McElheny et al. 2000). Each viable population needs to exhibit the abundance, productivity, spatial distribution and diversity of natural spawners sufficient to accomplish the following: avoid the loss of genetic and/or life history diversity during short-term losses in abundance that are expected parts of environmental cycles; fulfill key ecological functions that are attributable to the species, such as nutrient cycling and food web roles; and be resilient to environmental and anthropogenic disturbances.

The primary effect of barriers (e.g., hydroelectric dams, water storage projects, irrigation diversions, impassable culverts, etc.) on Pacific salmonids is the reduction in population abundance and productivity through excessive mortality and reduction in habitat quantity and quality. Individuals are lost to the population due to death from passing through turbines, disproportionate predation in reservoirs, entrainment at unscreened or improperly screened diversions, etc. Spatial structure and diversity have also been reduced by the loss of nearly 40% of salmon habitat from dams (NRC 1996), either through complete blockage or inundation.

This document is intended to assist with improving conditions for salmonids that must migrate past barriers to complete their life cycle. The task involved in successfully passing fish upstream or downstream of an in-river impediment is a dynamic integration of fish behavior, physiology, and bio-mechanics with hydraulic analysis, hydrologic study, and engineering. Installing a fish passage structure does not constitute providing satisfactory fish passage unless all of the above components are adequately factored into the design.

The following document provides criteria, rationale, guidelines, and definitions for the purpose of designing proper fish passage facilities for the safe, timely, and efficient upstream and downstream passage of anadromous salmonids at impediments created by artificial structures,

natural barriers (where provision of fish passage is consistent with management objectives), or altered instream hydraulic conditions. This document provides fishway facility design standards for the National Marine Fisheries Service, and is to be used for actions pertaining to the various authorities and jurisdictions of NMFS, including Section 18 of the Federal Power Act (FPA), the Endangered Species Act (ESA), and the Magnuson-Stevens Fishery Conservation and Management Act (MSA) in the Northwest Region (NWR). This document intends to provide generic guidance as an alternative to active participation by NMFS engineers in a design process, for the purpose of providing designs that will be acceptable for fishways that fall within NMFS jurisdictions. If passage facilities are designed and constructed in a manner consistent with these criteria, adverse impacts to anadromous fish migration will be minimized.

Instances will occur where a fish passage facility may not be a viable solution for correcting a passage impediment, due to biological, sociological, or economic constraints. In these situations, removal of the impediment or altering operations may be a suitable surrogate for a constructed fish passage facility. In other situations, accomplishing fish passage may not be an objective of NMFS because of factors such as limited habitat or lack of naturally occurring runs of anadromous fish upstream of the site. To determine whether NMFS will use its various authorities to promote or to prescribe fish passage, NMFS will rely on a collaborative approach, considering the views of other fisheries resource agencies, Native American Tribes, non-government organizations, and citizen groups, and will strive to accomplish the objectives in watershed plans for fisheries restoration and enhancement.

This document does not address aspects of design other than those that provide for safe and timely fish passage, and to some extent, preservation of aquatic habitat. Structural integrity, public safety, and other aspects of facility design are the responsibility of the principal design engineer, who should ensure that the final facility design meets all other requirements in addition to the fish passage criteria and guidelines contained in this document.

Section 11 (Fish Screen and Bypass Facilities) supersedes previous design guidance published by NMFS, including Juvenile Fish Screen Criteria (February 16, 1995) and Juvenile Fish Screen Criteria for Pump Intakes (May 9, 1996).

The fish passage facilities described in this document include various fish ladders; exclusion barriers; trap and haul facilities; fish handling and sorting facilities; instream structures; road crossing structures such as culverts or bridges; juvenile fish screens; tide gates (still under development); infiltration galleries; upstream juvenile passage facilities; and specialized criteria for mainstem Columbia and Snake River passage facilities. Passage facilities for projects under NMFS jurisdiction should be consistent with the details described in this document, with the facility design developed in coordination with NMFS fish passage specialists.

Proponents of new, unproven fish passage designs (i.e., not meeting the criteria and guidelines contained in this document) must provide to NMFS: (1) development of a biological basis for the concept; (2) demonstration of favorable fish behavioral response in a laboratory setting; (3) an acceptable plan for evaluating the prototype installation; and (4) an acceptable alternate plan developed concurrently for a fish passage design satisfying these criteria, should the prototype

not adequately protect fish. Section 16 (Experimental Fish Guidance Devices) provides additional information on the NMFS approval process for unproven fish passage devices.

Criteria are specific standards for fishway design, maintenance, or operation that cannot be changed without a written waiver from NMFS. For the purposes of this document, a criterion is preceded by the word "must." In general, a specific criterion can not be changed unless there is site-specific biological rationale for doing so. An example of biological rationale that could lead to criterion waiver is a determination or confirmation by NMFS biologists that the smallest fry-sized fish will likely not be present at a proposed screen site. Therefore, the juvenile fish screen approach velocity criterion of 0.4 ft/s could be increased to match the smallest life stage expected at the screen site. A guideline is a range of values or a specific value for fishway design, maintenance or operation that may change when site-specific conditions are factored into the conceptual fishway design. For the purposes of this document guidelines are preceded by the word "should." Guidelines should be followed in the fishway design until site-specific information indicates that a different value would provide better fish passage conditions or solve site-specific issues. An example of site-specific rationale that could lead to a modified guideline is when the maximum river depth at a site is three feet, as compared to the design guideline for a fishway entrance depth of six feet. In this example, safe and timely fish passage could be provided by modifying the guideline to match the depth in the river. It is the responsibility of the applicant to provide compelling evidence in support of any proposed waiver of criteria or modification of a guideline for NMFS approval early in the design process, well in advance of a proposed Federal action.

On occasion, more conservative designs may be required on a project-by-project basis if there is a need to provide additional protection for other species of fish. In addition, there may be instances where NMFS provides written approval for use of alternative passage standards, if NMFS determines that the alternative standards provide equal or superior protection as compared to the guidelines and criteria listed herein, for a particular site or for a set of passage projects within the NWR.

It is possible that part or all of this document, or approved alternate passage standards, could be used to develop programmatic consultation under the ESA. For example, a project developer may choose to use this document as the basis for fish passage design and develop additional detail beyond the scope of this document (e.g., construction management, project implementation scheduling, riparian replacement, project monitoring, etc.) in consultation with NMFS. Programmatic ESA consultation may conclude that an optimal uniform approach to implementing a number of fish passage projects will not pose any threat to ESA-listed species or to critical habitat. With this conclusion, individual ESA consultation on each project could be avoided.

Existing facilities may not adhere to the criteria and guidelines listed in this document. However, that does not mean these facilities must be modified specifically for compliance with this document. The intention of these criteria and guidelines is to ensure future compliance in the context of major upgrades and new designs of fish passage facilities.

The following document is hereby designated as NMFS NWR Fish Passage Design Policy for responsibilities under the ESA, FPA, and MSA, for the purpose of providing project proponents with NMFS' perspective on proper design of fish passage facilities for providing safe, timely, and efficient fish passage. This document was developed by NWR fish passage engineers based on nearly 60 years of agency experience in developing fishway designs, and further refined through a collaborative process with regional fishway design experts. This guidance is considered to be a working document, thus when new or updated information suggests that a different standard (criterion or guideline) provides better fishway passage, simplifies operations, or decreases required maintenance, this document will be periodically updated. Suggested changes, additions, or questions should be directed to Bryan Nordlund at Bryan.Nordlund@noaa.gov for consideration in updating this document. Assistance from NMFS fish passage specialists can be obtained by contacting the NMFS NWR Hydropower Division at (503) 230-5414.

Bruce K. Suzumoto
Assistant Regional Administrator
Hydropower Division

1. DEFINITION OF TERMS

Terms defined in this section are identified in *italics* throughout the document.

Anadromous **-** fish species that travel upstream to spawn in freshwater.

Active screens - juvenile fish screens equipped with proven cleaning capability and are automatically cleaned as frequently as necessary to keep the screens free of any debris that will restrict flow area. An *active screen* is the required design in most instances.

Approach velocity - the vector component of canal velocity that is perpendicular to and upstream of the vertical projection of the screen face, calculated by dividing the maximum screened flow by the *effective screen area*. An exception to this definition is for end-of-pipe cylindrical screens, where the *approach velocity* is calculated using the entire *effective screen area*. *Approach velocity* should be measured as close as physically possible to the boundary layer turbulence generated by the screen face.

Apron - a flat, usually slightly inclined slab below a flow control structure that provides for erosion protection and produces hydraulic characteristics suitable for energy dissipation or in some cases fish exclusion.

Attraction flow - the flow that emanates from a *fishway entrance* with sufficient velocity and in sufficient quantity and location to attract upstream migrants into the *fishway*. *Attraction flow* consists of gravity flow from the *fish ladder*, plus any *auxiliary water system* flow added at points within the lower *fish ladder*.

Auxiliary water system - a hydraulic system that augments *fish ladder* flow at various points in the *upstream passage facility*. Typically, large amounts of auxiliary water flow are added in the *fishway entrance* pool in order to increase the attraction of the *fishway entrance*.

Backwash - providing debris removal by pressurized wash, opposite to the direction of flow.

Backwater - a condition whereby a *hydraulic drop* is influenced or controlled by a water surface control feature located downstream of the *hydraulic drop*.

Baffles - physical structures placed in the flow path designed to dissipate energy or to re-direct flow for the purpose of achieving more uniform flow conditions.

Bankfull - the bank height inundated by an approximately 1.2 to 1.5 year (maximum) average recurrence interval and may be estimated by morphological features such as the following: (1) a topographic break from vertical bank to flat *floodplain*; (2) a topographic break from steep slope to gentle slope; (3) a change in vegetation from bare to grass, moss to grass, grass to sage, grass to trees, or from no trees to trees; (4) a textural change of depositional sediment; (5) the elevation below which no fine debris (e.g., needles, leaves, cones, seeds) occurs; and (6) a textural change of matrix material between cobbles or rocks.

Bedload - sand, silt, gravel, or soil and rock debris transported by moving water on or near the streambed.

Bifurcation (Trifurcation) pools - pools where two or three sections of *fish ladder*s divide into separate routes.

Brail - a device that moves upward (vertically) through the water column, crowding fish into an area for collection.

Bypass flow - in context of screen design, that portion of flow diverted that is specifically used to bypass fish back to the river.

Bypass reach - the portion of the river between the point of flow diversion and the point of flow return to the river.

Bypass system - the component of a downstream passage facility that transports fish from the diverted water back into the body of water from which they originated, usually consisting of a bypass entrance, a bypass conveyance, and a bypass outfall.

Channel bed width - the width of the stream bed under *bankfull* channel conditions.

Conceptual design - an initial design concept based on the site conditions and biological needs of the species intended for passage. This is also sometimes referred to as *preliminary design* or *functional design*.

Crowder - a combination of static and/or movable *picketed* and/or solid leads installed in a *fishway* for the purpose of moving fish into a specific area for sampling, counting, broodstock collection, or other purposes.

Diffuser - typically, a set of horizontal or vertical bars designed to introduce flow into a *fishway* in a nearly uniform fashion. Other means are also available that may accomplish this objective.

Distribution flume - a channel used to route fish to various points in a fish trapping system.

Effective screen area - the total submerged screen area, excluding major structural members, but including the screen face material. For rotating drum screens, *effective screen area* consists only of the submerged area projected onto a vertical plane, excluding major structural members, but including screen face material.

End of pipe screens - juvenile fish screening devices attached directly to the intake of a diversion pipe.

Entrainment - the unintended diversion of fish into an unsafe passage route.

Exclusion barriers - upstream passage facilities that prevent upstream migrants from entering areas with no upstream egress, or areas that may lead to fish injury.

Exit control section - the upper portion of an *upstream passage facility* that serves to provide suitable passage conditions to accommodate varying *forebay* water surfaces, through means of pool geometry, *weir* design, and the capability to add or remove flow at specific locations.

False weir - a device that adds vertical flow to a upstream fishway, usually used in conjunction with a *distribution flume* that routes fish to a specific area for sorting or to continue upstream passage.

Fish ladder - the structural component of an *upstream passage facility* that dissipates the potential energy into discrete pools, or uniformly dissipates energy with a single *baffled* chute placed between an entrance pool and an exit pool or with a series of *baffled* chutes and resting pools.

Fish lift - a mechanical component of an upstream passage system that provides fish passage by lifting fish in a water-filled *hopper* or other lifting device into a conveyance structure that delivers upstream migrants past the impediment.

Fish lock - a mechanical and hydraulic component of an upstream passage system that provides fish passage by attracting or crowding fish into the lock chamber, activating a closure device to prevent fish from escaping, introducing flow into the enclosed lock, and raising the water surface to *forebay* level, and then opening a gate to allow the fish to exit.

Fish passage season - the range of dates when a species migrates to the site of an existing or proposed *fishway*, based on either available data collected for a site, or consistent with the opinion of an assigned NMFS biologist when no data is available.

Fish weir *(also called picket weir or fish fence)* - a device with closely spaced *pickets* to allow passage of flow, but preclude upstream passage of adult fish. Normally, this term is applied to the device used to guide fish into an adult fish trap or counting window. This device is not a *weir* in the hydraulic sense.

Fishway - the set of facilities, structures, devices, measures, and project operations that together constitute, and are essential to the success of, an upstream or downstream fish passage system.

Fishway entrance - the component of an *upstream passage facility* that discharges *attraction flow* into the *tailrace*, where upstream migrating fish enter (and flow exits) the *fishway*.

Fishway exit - the component of an *upstream passage facility* where flow from the *forebay* enters the *fishway*, and where fish exit into the *forebay* upstream of the passage impediment.

Fishway entrance pool - the pool immediately upstream of the *fishway entrance*(s), where *fish ladder* flow combines with any remaining *auxiliary water system* flow to form the *attraction flow*.

Fishway weir - the partition that passes flow between adjacent pools in a *fishway.*

Flood frequency - the frequency with which a flood of a given river flow has the probability of recurring based on historic flow records. For example, a "100-year" frequency flood refers to a flood flow of a magnitude likely to occur on the average of once every 100 years, or, has a one-percent chance of being exceeded in any year. Although calculation of possible recurrence is often based on historical records, there is no guarantee that a "100-year" flood will occur within the 100-year period or that it will not recur several times.

Floodplain - the area adjacent to the stream that is inundated during periods of flow that exceed stream channel capacity, as established by the stream over time.

Flow control structure - a structure in a water conveyance intended to maintain flow in a predictable fashion.

Flow duration exceedence curve - the plot of the relationship between the magnitude of daily flow and the percentage of the time period for which that flow is likely to be equaled or exceeded. Other time units can be used as well, depending on the intended application of the data.

***Flow egress wei*r** - a *weir* used to route excess flow (without fish) from a fish facility.

Forebay - the water body impounded immediately upstream of a dam.

Freeboard - the height of a structure that extends above the maximum water surface elevation.

Fry - for purposes of this document, defined as a young juvenile salmonid with absorbed egg sac, less than 60 mm in length.

Functional design - an initial design concept, based on the site conditions and biological needs of the species intended for passage. This is also sometimes referred to as *preliminary design* or *conceptual design*.

Hatchery supplementation - hatchery propagation usually utilizing the progeny of local wild broodstock.

Head loss - the loss of energy through a hydraulic structure.

Hopper - a device used to lift fish (in water) from a collection or holding area, for release upstream of the impediment.

Hydraulic drop - the energy difference between an upstream and downstream water surface, considering potential (elevation) and kinetic energy (*velocity head*), and pressure head. For *fishway* entrances and *fishway weir*s, the difference in kinetic energy and pressure head is usually negligible and only water surface elevation differences are considered when estimating *hydraulic drop* across the structure. As such, staff gages that indicate *hydraulic drop* over these structures must be suitably located to avoid the drawdown of the water surface due to flow accelerating through the *fishway weir* or *fishway entrance*.

Impingement - the consequence of a situation where flow velocity exceeds the swimming capability of a fish, creating injurious contact with a screen face or bar rack.

Infiltration gallery - a water diversion that provides flow via an excavated gallery beneath the stream bed.

Kelts - an adult steelhead that has completed spawning and is migrating downstream.

Off-ladder trap - a trap for capturing fish located adjacent to a *fish ladder* in an off ladder flow route, separate from the normal *fish ladder* route. This device allows fish to either pass via the ladder, or be routed into the trap depending on management objectives.

Passive screens - juvenile fish screens without an automated cleaning system.

Picket leads or Pickets - a set of vertically inclined flat bars or circular slender columns (*pickets*), designed to exclude fish from a specific point of passage (also, see *fish weir*).

PIT- tag detector - a device that passively scans a fish for the presence of a passive integrated transponder (PIT) tag that is implanted in a fish and read when activated by an electro-magnetic field generated by the detector.

Plunging flow - flow over a *weir* that falls into the receiving pool with a water surface elevation below the *weir* crest elevation. Generally, surface flow in the receiving pool is in the upstream direction, downstream from the point of entry into the receiving pool.

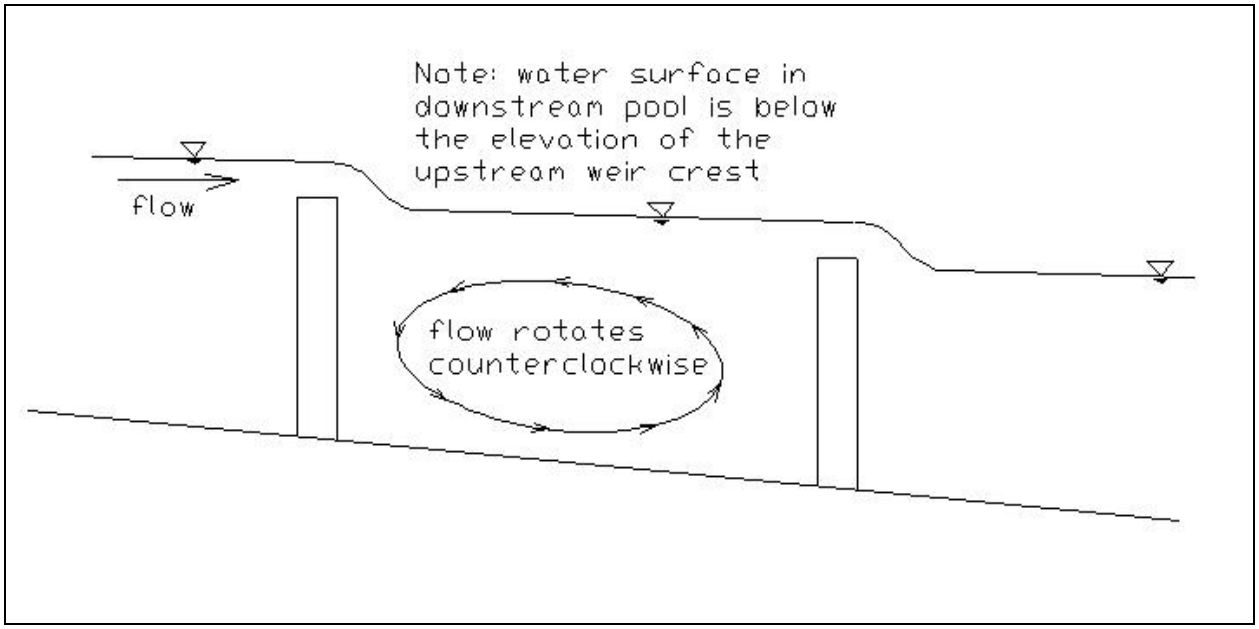

Figure 1-1. Plunging Flow over Fishway Weir

Porosity - the open area of a mesh, screen, rack or other flow area relative to the entire gross area.

Positive-exclusion - a means of excluding fish by providing a barrier which they can not physically pass through.

Preliminary design - an initial design concept, based on the site conditions and biological needs of the species intended for passage. This is also sometimes referred to as *functional design* or *conceptual design*.

Ramping rates - the rate at which (typically inches per hour) a flow is artificially altered to accommodate diversion requirements.

Rating curve - the graphed data depicting the relationship between water surface elevation and flow.

Redd - deposition of fish eggs in a gravel nest, excavated by a spawning female salmonid.

Screen material - the material that provides physical exclusion to reduce the probability of entraining fish. Examples of *screen material* include perforated plate, bar screen, and woven wire mesh.

Scour - erosion of streambed material, resulting in temporary or permanent lowering of streambed profile.

Section 10 and 404 Regulatory Programs - The principal Federal regulatory programs, carried out by the COE, affecting structures and other work below mean high water. The COE, under Section 10 of the River and Harbor Act of 1899, regulates structures in, or affecting, navigable waters of the U.S. as well as excavation or deposition of materials (e.g., dredging or filling) in navigable waters. Under Section 404 of the Federal Water Pollution Control Act Amendments (Clean Water Act of 1977), the COE is also responsible for evaluating application for Department of the Army permits for any activities that involve the placement of dredged or fill material into waters of the United States, including adjacent wetlands.

Smolt - a juvenile salmonid that has completed its fresh water rearing cycle and is proceeding out to sea.

Streaming flow - flow over a *weir* which falls into a receiving pool with water surface elevation above the *weir* crest elevation. Generally, surface flow in the receiving pool is in the downstream direction, downstream from the point of entry into the receiving pool.

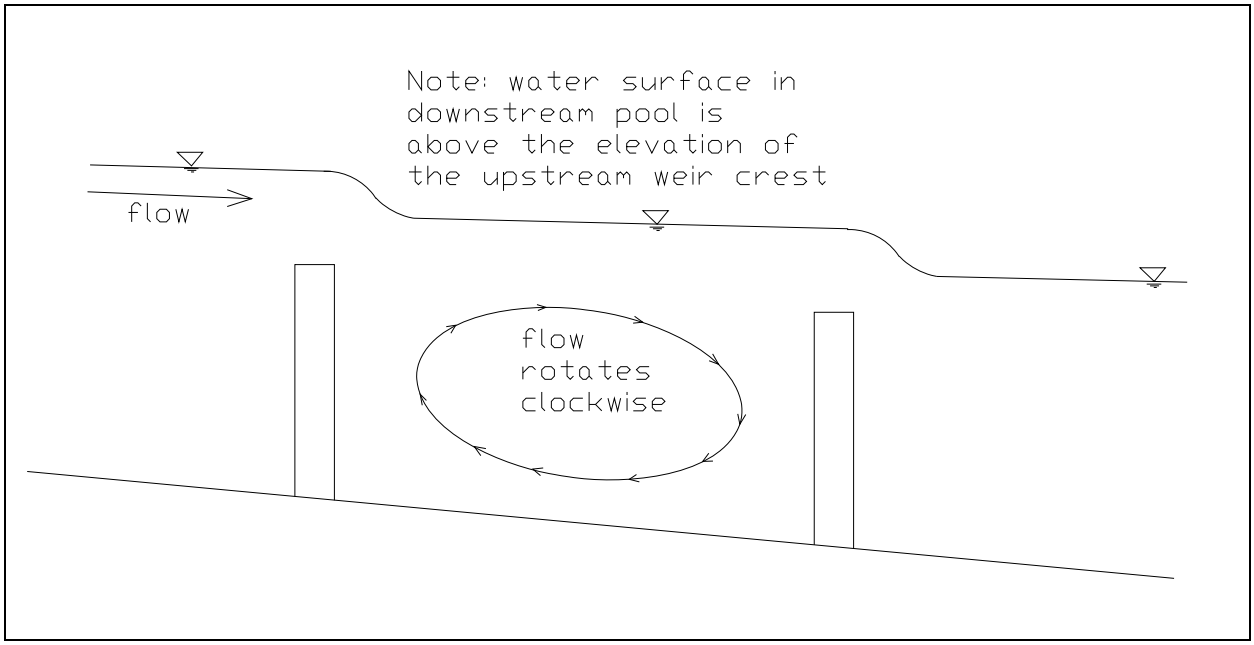

Figure 1-2. Streaming Flow over Fishway Weir

Sweeping velocity - the vector component of canal flow velocity that is parallel and adjacent to the screen face, measured as close as physically possible to the boundary layer turbulence generated by the screen face.

Tailrace - the stream immediately downstream of an instream structure.

Tailwater - the flow through the *tailrace*.

Total project head - the difference in water surface elevation from upstream to downstream of an impediment such as a dam. Normally, *total project head* encompasses a range based on stream flows and/or the operation of flow control devices.

Thalweg - the stream flow path following the deepest parts of a stream channel.

Tide Gate - a gate used in coastal areas to regulate tidal intrusion.

Training wall - a physical structure designed to direct flow to a specific location or in a specific direction.

Transport channel - a hydraulic conveyance designed to pass fish between different sections of a fish passage facility.

Transport velocity - the velocity of flow within the migration corridor of a *fishway*, excluding areas with any *hydraulic drop*s greater than 0.1 feet.

Trap and Haul - a fish passage facility designed to trap fish for upstream or downstream transport to continue their migration.

Trash rack - a rack of vertical bars with spacing designed to catch debris and preclude it from entering the *fishway*, while providing sufficient opening to allow the passage of fish.

Trash rack, coarse - a rack of vertical bars with spacing designed to catch large debris and preclude it from entering the *fishway*, while providing sufficient opening to allow the passage of fish.

Trash rack, fine - a rack of vertical bars designed to catch debris and reduce or eliminate entry of fish into the intake of an *auxiliary water system.*

Turbine intake screens – partial flow screens positioned within the upper portion of turbine intakes, designed to guide fish into a collection system for transport or bypass back to the river.

Upstream fish passage - fish passage relating to upstream migration of adult and/or juvenile fish.

Upstream passage facility - a *fishway* system designed to pass fish upstream of a passage impediment, either by *volitional passage* or non-*volitional passage*.

Vee screen - a pair of juvenile fish screens installed in a vee configuration (i.e., mirrored about a centerline) with the bypass entrance located between the junction of the two screens.

***Velocity head* (h_v)** - the kinetic energy of flow contained by the water velocity, calculated by the square of the velocity (V) divided by two times the gravitational constant (g) ($h_v = V^2/2g$).

Vertical barrier screens - vertical screens, usually located in a gatewell of a mainstream hydroproject, that dewater flow from *turbine intake screens*, thereby concentrating fish for passage into a *bypass system*.

Volitional passage - fish passage made continuously available without trap and transport.

Wasteway - a conveyance which returns water originally diverted from an upstream location back to the diverted stream.

Weir - an obstruction over which water flows.

2. PRELIMINARY DESIGN DEVELOPMENT

2.1 Introduction – Preliminary Design Development

In cases such as applications for a FERC license, ESA consultation, ESA Section 9 Enforcement activity, or ESA permit, a *preliminary design* for a fish passage facility must be developed in an interactive process with NMFS NWR Hydropower Division engineering staff. For all fish passage facility projects, the *preliminary design* should be developed based on a synthesis of the required site and biological information listed below. In general, NMFS will review fish passage facility designs in the context of how the required site and the biological information was integrated into the design. Submittal of all information discussed below may not be required in writing for NMFS review. However, the applicant should be prepared to describe how the biological and site information listed below was included in the development of the *preliminary design*. NMFS will be available to discuss these criteria in general or in the context of a specific site. The applicant is encouraged to initiate coordination with NMFS fish passage specialists early in the development of the *preliminary design* to facilitate an iterative, interactive, and cooperative process.

2.2 Site Information

The following site information should be provided for the development of the *preliminary design*.

1. Functional requirements of the proposed fish passage facilities as related to all anticipated operations and river flows. Describe median, maximum, and minimum monthly diverted flow rates, plus any special operations (e.g., use of flash boards) that modify *forebay* or *tailrace* water surface elevations.

2. Site plan drawing showing location and layout of the proposed *fishway* relative to existing project features facilities.

3. Topographic and bathymetric surveys, particularly where they might influence locating *fishway* entrances and exits, and personnel access to the site.

4. Drawings showing elevations and a plan view of existing flow diversion structures, including details showing the intake configuration, location, and capacity of project hydraulic features.

5. Basin hydrology information, including daily and monthly streamflow data and *flow duration exceedence curves* at the proposed fish passage facility site based on the entire period of available record. Where stream gage data is unavailable, or if a short period of record exists, appropriate synthetic methods of generating flow records may be used.

6. Project operational information that may affect fish migration (e.g., powerhouse flow capacity, period of operation, etc.)

7. Project *forebay* and *tailwater rating curve*s encompassing the entire operational range.

8. River morphology trends. If the fish passage facility is proposed at a new or modified diversion, determine the potential for channel degradation or channel migration that may alter stream channel geometry and compromise *fishway* performance. Describe whether the stream channel is stable, conditionally stable, or unstable, and indicate the overall channel pattern as straight, meandering, or braided. Estimate the rate of lateral channel migration and change in stream gradient that has occurred over the last decade. Also, describe what effect the proposed fish passage facility may have on existing stream alignment and gradient and the potential for future channel modification due to either construction of the facility or continuing natural channel instability.

9. Special sediment and/or debris problems. Describe conditions that may influence design of the fish passage facility, or present potential for significant problems.

10. Other information from site-specific biological assessment.

2.3 Biological Information

The following biological information should be provided for the development of the *preliminary design*.

1. Type, life stage, run size, period of migration, and spawning location and timing for each life stage and species present at the site.

2. Other species (including life stage) present at the proposed fish passage site that also require passage.

3. Predatory species that may be present.

4. High and low design passage flow for periods of *upstream fish passage* (see Section 3).

5. Any known fish behavioral aspects that affect salmonid passage. For example, most salmonid species pass readily through properly designed orifices, but other species unable to pass through these orifices may impede salmonid passage.

6. What is known and what needs to be researched about fish migration routes approaching the site.

7. Document, or estimate, minimum streamflow required to allow migration around the impediment during low water periods (based on past site experience).

8. Poaching/illegal trespass - describe the degree of human activity in immediate area and the need for security measures to reduce or eliminate illegal activity.

9. Water quality factors that may affect fish passage at the site. Fish may not migrate if water temperature and quality are marginal, instead seeking holding zones until water quality conditions improve.

2.4 Design Development Phases

A description of steps in the design process is presented here to clarify the *preliminary design* as it contrasts with often-used and related terms in the design development process. The following are commonly used terms (especially in the context of larger facilities) by many public and private design entities. NMFS engineering staff may be consulted for all phases of design; required reviews are described below in Detailed Design Phase.

Reconnaissance study - typically an early investigation of one or more sites for suitability of design and construction of some type of facility.

Conceptual alternatives study - lists types of facilities that may be appropriate for accomplishing objectives at a specific site, and does not entail much on-site investigation. It results in a narrowed list of alternatives that merit additional assessment.

Feasibility study - includes an incrementally greater amount of development of each design concept (including a rough cost estimate), which enables selection of a most-preferred alternative.

Preliminary design - includes additional and more comprehensive investigations and design development of the preferred alternative, and results in a facilities layout (including some section drawings), with identification of size and flow rate for primary project features. Cost estimates are also considered to be more accurate. Completion of the *preliminary design* commonly results in a *preliminary design* document that may be used for budgetary and planning purposes, and as a basis for soliciting (and subsequent collating) design review comments by other reviewing entities. The *preliminary design* is commonly considered to be at the 20% to 30% completion stage of the design process.

Detailed design phase - uses the *preliminary design* as a springboard for preparation of the final design and specifications, in preparation for the bid solicitation (or negotiation) process. Once the detailed design process commences, NMFS must have the opportunity to review and provide comments at the 50% and 90% completion stages. These comments usually entail refinements in the detailed design that will lead to operations, maintenance, and fish safety benefits. Electronic drawings accompanied by 11 x 17 inch paper drawings are the preferred review medium.

3. DESIGN FLOW RANGE

3.1 Introduction – Design Flow Range

The design streamflow range for fish passage, bracketed by the designated fish passage design high and low flows, constitutes the bounds of the fish passage facility design where fish passage facilities must operate within the specified design criteria. Within this range of streamflow, the *fishway* design must allow for safe, timely, and efficient fish passage. Outside of this flow range, fish must either not be present or not be actively migrating, or must be able to pass safely without need of a fish passage facility. Site-specific information is critical to determine the design time period and river flows for the passage facility - local hydrology may require that these design streamflows be modified for a particular site.

Criteria are specific standards for fishway design, maintenance, or operation that cannot be changed without a written waiver from NMFS. For the purposes of this document, a criterion is preceded by the word "must." In general, a specific criterion can not be changed unless there is site-specific biological rationale for doing so. An example of biological rationale that could lead to criterion waiver is a determination or confirmation by NMFS biologists that the smallest fry-sized fish will likely not be present at a proposed screen site. Therefore, the juvenile fish screen approach velocity criterion of 0.4 ft/s could be increased to match the smallest life stage expected at the screen site. A guideline is a range of values or a specific value for fishway design, maintenance, or operation that may change when site-specific conditions are factored into the conceptual fishway design. For the purposes of this document guidelines are preceded by the word "should." Guidelines should be followed in the fishway design until site-specific information indicates that a different value would provide better fish passage conditions or solve site-specific issues. An example of site-specific rationale that could lead to a modified guideline is when the maximum river depth at a site is 3 feet, as compared to the design guideline for a fishway entrance depth of 6 feet. In this example, safe and timely fish passage could be provided by modifying the guideline to match the depth in the river. It is the responsibility of the applicant to provide compelling evidence in support of any proposed waiver of criteria or modification of a guideline for NMFS approval early in the design process, well in advance of a proposed Federal action.

3.2 Design Low Flow for Fish Passage

Design low flow for fishways is the mean daily average streamflow that is exceeded 95% of the time during periods when migrating fish are normally present at the site. This is determined by summarizing the previous 25 years of mean daily streamflows occurring during the *fish passage season*, or by an appropriate artificial stream *flow duration* methodology if streamflow records are not available. Shorter data sets of stream flow records may be useable if they encompass a broad range of flow conditions. The fish passage design low flow is the lowest streamflow for which migrants are expected to be present, migrating, and dependent on the proposed facility for safe passage.

3.3 Design High Flow for Fish Passage

Design high flow for fishways is the mean daily average streamflow that is exceeded 5% of the time during periods when migrating fish are normally present at the site. This is determined by summarizing the previous 25 years of mean daily streamflows occurring during the *fish passage season*, or by an appropriate artificial stream *flow duration* methodology if streamflow records are not available. Shorter data sets of stream flow records may be used if they encompass a broad range of flow conditions. The fish passage design high flow is the highest streamflow for which migrants are expected to be present, migrating, and dependent on the proposed facility for safe passage.

3.4 Fish Passage Design for Flood Flows

The general *fishway* design should have sufficient river *freeboard* to minimize overtopping by 50 year flood flows. Above a 50-year flow event, the *fishway* operations may include shutdown of the facility, in order to allow the facility to quickly return to proper operation when the river drops to within the range of fish passage design flows. Other mechanisms to protect *fishway* operations after floods will be considered on a case-by-case basis. A *fishway* must never be inoperable due to high river flows for a period greater than 7 days during the migration period for any anadromous salmonid species. In addition, the fish passage facility should be of sufficient structural integrity to withstand the maximum expected flow. It is beyond the scope of this document to specify structural criteria for this purpose. If the fish passage can not be maintained, the diversion structure should not operate and the impediment should be removed.

4. UPSTREAM ADULT FISH PASSAGE SYSTEMS

4.1 Introduction – Upstream Adult Fish Passage Systems

An upstream passage impediment is defined as any artificial structural feature or project operation that causes adult or juvenile fish to be injured, killed, blocked, or delayed in their upstream migration, to a greater degree than in a natural river setting. Artificial impediments require a fish passage design using conservative criteria, because the natural complexity that usually provides fish passage has been substantially altered.

This definition is provided for the purpose of describing situations in which NMFS will use these criteria in reviewing mitigative measures designed to improve fish passage at an impediment. Any upstream passage impediment requires approved structural and/or operational measures to mitigate, to the maximum extent practicable, for adverse impacts to *upstream fish passage*. These criteria are also applicable where passage over a natural barrier is desired and consistent with watershed, subbasin, or recovery plans.

It is important to note that not every *upstream passage facility* constructed at an upstream passage impediment can fully compensate for an unimpeded natural channel. As such, additional mitigation measures may be required on a case-by-case basis.

The examples listed below do not imply that passage is completely blocked by the impediment. Rather, this list is comprised of situations where fish passage does not readily occur, in comparison to a natural stream system. Examples of passage impediments include, but are not limited to, the following:

- Permanent or intermittent dams.
- *Hydraulic drop* over an artificial instream structure in excess of 1.5 feet.
- *Weir*s, *aprons*, *hydraulic jumps* or other hydraulic features that produce depths of less than 10 inches, or flow velocity greater than 12 ft/s for over 90% of the stream channel cross section.
- Diffused or braided flow that impedes the approach to the impediment.
- Project operations that lead upstream migrants into impassable routes.
- Upstream passage facilities that do not satisfy the guidelines and criteria described below.
- Poorly designed headcut control or bank stabilization measures that create impediments such as listed above.
- Insufficient *bypass reach* flows to allow or induce upstream migrants to move upstream into the *bypass reach* adjacent to a powerhouse or *wasteway* return.
- Degraded water quality in a *bypass reach*, relative to that downstream of the confluence of *bypass reach* and flow return discharges (e.g., at the confluence of a hydroproject *tailrace* that returns flow diverted from the river at some upstream location).
- *Ramping rates* in streams or in *bypass reachs* that delay or strand fish.
- Discharges to or from the stream that may be detected and entered by fish with no certain means of continuing their migration (e.g., poorly designed spillways, cross-basin water transfers, unscreened diversions).

- Discharges to or from the stream that are attractive to migrating fish (e.g., turbine draft tubes, shallow *aprons* and flow discharges) that have the potential to cause injury.
- Water diversions that reduce instream flow.

In addition to describing the configuration and application of the particular styles of *fish ladder*s, this section identifies general criteria and guidelines for use in completion of an upstream adult fish passage facility design. The intent of this section is to identify potential pitfalls and advantages of a particular type of passage system given specific site conditions, and to provide criteria and guidelines for use with a specific type of *fish ladder*. In general, NMFS requires *volitional passage*, as opposed to *trap and haul*, for all passage facilities. This is primarily due to the risks associated with the handling and transport of migrant salmonids, in combination with the long term uncertainty of funding, maintenance, and operation of the trap and haul program including facility failure. However, there are instances in which trap and haul may be the best viable option for upstream and/or downstream fish passage at a particular site, due to height of the dam, temperature issues in a long ladder, passage through multiple projects or other site-specific issues. The design of *trap and haul* facilities is described in Section 6.

The criteria and guidelines listed in this section apply to adult *upstream fish passage* in "moderately-sized" streams. This description is intentionally vague, because the variability of sites and passage needs within the NWR do not lend themselves to a "one size fits all" document specifying stringent criteria for upstream passage systems. Rather, it is expected that for streams with annual average flows between 500 to 5000 cfs, the guidelines listed may be applied in design without significant modification.

Criteria are specific standards for fishway design, maintenance, or operation that cannot be changed without a written waiver from NMFS. For the purposes of this document, a criterion is preceded by the word "must." In general, a specific criterion can not be changed unless there is site-specific biological rationale for doing so. An example of biological rationale that could lead to criterion waiver is a determination or confirmation by NMFS biologists that the smallest fry-sized fish will likely not be present at a proposed screen site. Therefore, the juvenile fish screen approach velocity criterion of 0.4 ft/s could be increased to match the smallest life stage expected at the screen site. A guideline is a range of values or a specific value for fishway design, maintenance or operation that may change when site-specific conditions are factored into the conceptual fishway design. For the purposes of this document guidelines are preceded by the word "should." Guidelines should be followed in the fishway design until site-specific information indicates that a different value would provide better fish passage conditions or solve site-specific issues. An example of site-specific rationale that could lead to a modified guideline is when the maximum river depth at a site is 3 feet, as compared to the design guideline for a fishway entrance depth of 6 feet. In this example, safe and timely fish passage could be provided by modifying the guideline to match the depth in the river. It is the responsibility of the applicant to provide compelling evidence in support of any proposed waiver of criteria or modification of a guideline for NMFS approval early in the design process, well in advance of a proposed Federal action. After

a decision to provide passage at a particular site has been made, the following design criteria and guidelines are applicable, in addition to those described throughout Section 3.

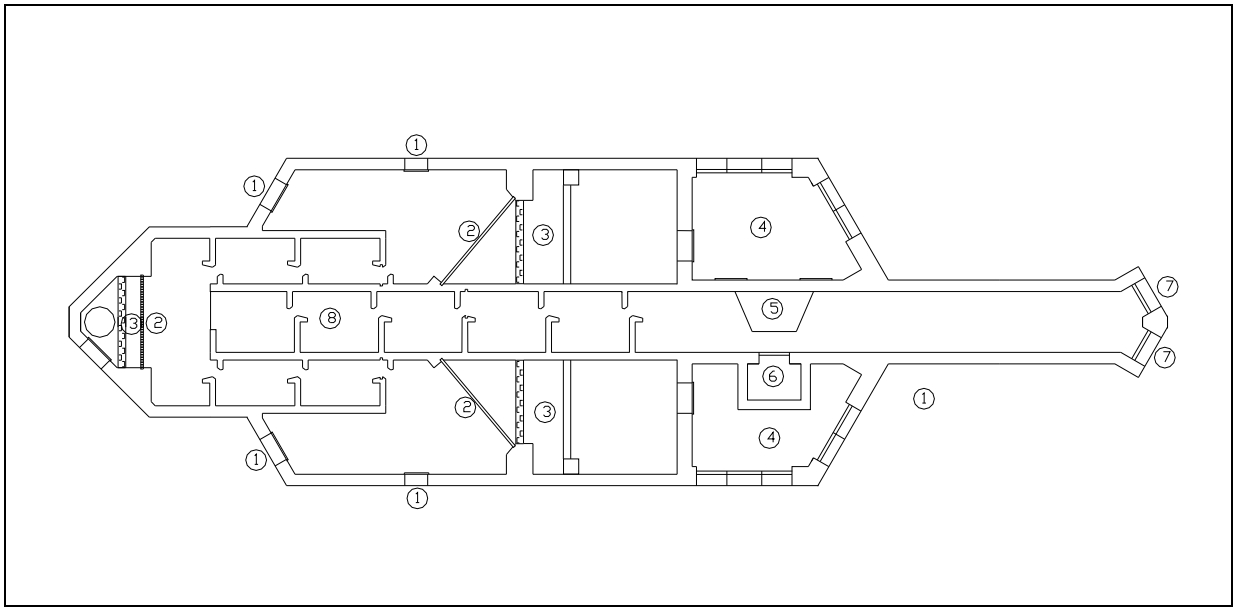

Figure 4-1. Features of an Upstream Passage System Using a Vertical Slot Fishway (flow is from right to left)

1 - Fishway Entrances
2 - Add-in AWS Diffusers
3 - Energy Dissipation Features
4 - AWS Supply Pools
5 - Counting station crowder and picket leads
6 - Counting Station
7 - Fishway Exits
8 - Fishway Pool

4.2 Fishway Entrance

4.2.1 Description and Purpose - Fishway Entrance

The *fishway entrance* is a gate or slot through which *fishway attraction flow* is discharged and through which fish enter the *upstream passage facility*. The *fishway entrance* is possibly the most critical component in the design of an upstream passage system. Placing a *fishway entrance(s)* in the correct location(s) will allow a passage facility to provide a good route of passage throughout the design range of passage flows. The most important aspects of a *fishway entrance* design are: (1) location of the entrance, (2) shape and amount of flow emanating from the entrance, (3) approach channel immediately downstream of the entrance, and (4) flexibility in operating the entrance flow to accommodate variations in *tailrace* elevation, stream flow conditions, and project operations.

4.2.2 Specific Criteria and Guidelines – Fishway Entrance

4.2.2.1 Configuration and Operation: The *fishway entrance* gate configuration and operation may vary based on site-specific project operations and streamflow characteristics. Entrance gates are usually operated in either a fully open or fully closed position, with the operating entrance dependent on *tailrace* flow characteristics. Sites with limited *tailwater* fluctuation may not require an entrance gate to regulate the entrance head. Adjustable *weir* gates that rise and fall with *tailwater* elevation may also be used to regulate the *fishway* entrance head. Other sites may accommodate maintaining proper entrance head by regulating auxiliary water flow through a fixed geometry entrance gate.

4.2.2.2 Location: *Fishway* entrances must be located at points where fish can easily locate the *attraction flow* and enter the *fishway*. When choosing an entrance location, high velocity and turbulent zones in a powerhouse or spillway *tailrace* should be avoided in favor of relatively tranquil zones adjacent to these areas. At locations where the *tailrace* is wide, shallow, and turbulent, excavation to create a deeper, less turbulent holding zone adjacent to the *fishway entrance(s)* may be required.

4.2.2.3 Attraction Flow: *Attraction flow* from the *fishway* entrance should be between 5% and 10% of fish passage design high flow (see Section 3) for streams with mean annual streamflows exceeding 1000 cfs. For smaller streams, when feasible, use larger percentages (up to 100%) of streamflow. Generally speaking, the higher percentages of total river flow used for attraction into the *fishway*, the more effective the facility will be in providing upstream passage. Some situations may require more than 10% of the passage design high flow, if site features obscure approach routes to the passage facility.

4.2.2.4 Hydraulic Drop: The *fishway entrance hydraulic drop* (also called entrance head) must be maintained between 1 and 1.5 feet, depending on the species present at the site, and designed to operate from 0.5 to 2.0 feet of *hydraulic drop*.

4.2.2.5 Dimensions: The minimum *fishway* entrance width should be 4 feet, and the entrance depth should be at least 6 feet, although the shape of the entrance is dependent on *attraction flow* requirements and should be shaped to accommodate site conditions. Also, see requirements for mainstem Columbia and Snake Rivers in Section 9.

4.2.2.6 Additional Entrances: If the site has multiple zones where fish accumulate, each zone must have a minimum of one entrance. For long powerhouses or dams, additional entrances may be required. Since *tailrace* hydraulic conditions usually change with project operations and hydrologic events, it is often necessary to provide two or more *fishway* entrances. Closure gates must be provided to direct flow to the appropriate entrance gate, and gate

stems (or other adjustment mechanisms) must not be placed in any potential path of fish migration. Fishway entrances must be equipped with downward-closing slide gates, unless otherwise approved by NMFS.

4.2.2.7 Types of Entrances: *Fishway entrances* may be adjustable submerged *weir*s, vertical slots, orifices, or other shapes, provided that the requirements specified in Section 4.2.2 are achieved. Some salmonid species will avoid using orifices, and at these sites, orifices should not be used.

4.2.2.8 Flow Conditions: The desired flow condition for entrance *weir* and/or slot discharge jet hydraulics is *streaming flow*. *Plunging flow* induces jumping and may cause injuries, and it presents hydraulic condition that some species may not be able to pass. *Streaming flow* may be accomplished by placing the entrance *weir* (or invert of the slot) elevation such that flow over the *weir* falls into a receiving pool with water surface elevation above the *weir* crest elevation (Katapodis 1992).

4.2.2.9 Orientation: Generally, low flow entrances should be oriented nearly perpendicular to streamflow, and high flow entrances should be oriented to be more parallel to streamflow. However, you must conduct site-specific assessments to determine entrance location and entrance jet orientation.

4.2.2.10 Staff Gages: The *fishway entrance* design must include staff gages to allow for a simple determination of whether entrance head criterion (see Section 4.2.2.4) is met. Staff gages must be located in the entrance pool and in the *tailwater* just outside of the *fishway entrance*, in an area visible from an easy point of access. Care should be taken when locating staff gages by avoiding placement in turbulent areas and locations where flow is accelerating toward the *fishway* entrance. Gages should be readily accessible to facilitate in-season cleaning.

4.2.2.11 Entrance Pools: The *fishway entrance* pool is at the lowest elevation of the upstream passage system. It discharges flow into the *tailrace* through the entrance gates for the purpose of attracting upstream migrants. In many *fish ladder* systems, the entrance pool is the largest and most important pool, in terms of providing proper guidance of fish to the ladder section of the *upstream passage facility*. It combines ladder flow with *auxiliary water system (AWS)* flow through *diffuser* gratings to form entrance *attraction flow* (see Section 4.3). The entrance pool must be configured to readily guide fish toward ladder *weir*s or slots.

4.2.2.12 Transport Velocity: Transport velocities between the *fishway* entrance and first *fishway weir*, fishway channels, and over submerged *fishway weir*s must be between 1.5 and 4.0 ft/s.

4.2.2.13 Entrance Pool Geometry: The *fishway* entrance pool geometry must be designed to optimize attraction to the lower *fishway weirs*. This may be accomplished by angling vertical AWS *diffuser*s toward and terminating near the lowest ladder *fishway weir,* or by placing primary *attraction flow*s near the lower *fishway weir*. The pool geometry will normally influence the location of *attraction flow diffuser*s.

4.3 Auxiliary Water Systems

4.3.1 Description and Purpose – Auxiliary Water Systems

*Auxiliary water system*s must be used when *attraction flow*s less than specified by Section 4.2.2.3 are routed from the project *forebay* into the *fish ladder*. AWS flow is usually routed from the *forebay* or pumped from the *tailrace*, through a *fine trash rack* or intake screen, through a back set flow control gate, then an energy dissipation zone consisting of energy *baffles* and/or *diffuser*s, and into the *fishway*. An AWS provides additional *attraction flow* from the entrance pool through the *fishway entrance*, and may also provide flow to an area between *fishway weir*s that on occasion become back-watered and fail to meet the criterion specified in Section 4.2.2.12. In addition, the AWS is used to provide make-up flows to various transition pools in the ladder such as *bifurcation* or *trifurcation* pools, trap pools, *exit control section*s, or counting station pools.

4.3.2 Specific Criteria and Guidelines – AWS Diffusers

Vertical *diffuser*s consist of non-corrosive, vertically-oriented *diffuser* panels of vertically-oriented flat bar stock, and must have a maximum 1-inch clear spacing. Similarly, horizontal *diffuser*s consist of non-corrosive, horizontally-oriented *diffuser* panels of horizontally-oriented flat bar stock, and must have a maximum 1-inch clear spacing. Orientation of flat bar stock must maximize the open area of the *diffuser* panel. If a smaller species or life stage of fish is present, smaller clear spacing may be required.

4.3.2.1 Velocity and Orientation: The maximum AWS *diffuser* velocity must be less than 1.0 ft/s for vertical *diffuser*s and 0.5 ft/s for horizontal *diffuser*s, based on total *diffuser* panel area. Vertical *diffuser*s should only be used in appropriate orientation to assist in guiding fish within the *fishway*. *Diffuser* velocities should be nearly uniform.

4.3.2.2 Debris Removal: The AWS design must include access for debris removal from each *diffuser,* unless the AWS intake is equipped with a juvenile fish screen, as described in Section 11 and if required by Section 4.3.4.

4.3.2.3 Edges: All flat-bar *diffuser* edges and surfaces exposed to fish must be rounded or ground smooth to the touch, with all edges aligning in a single smooth plane to reduce the potential for contact injury.

4.3.2.4 Elevation: Vertical AWS *diffuser*s must have a top elevation at or below the low design entrance pool water surface elevation.

4.3.3 Specific Criteria and Guidelines– AWS Fine Trash Racks

A *fine trash rack* must be provided at the AWS intake with clear space between the vertical flat bars of $^{7}/_{8}$ inch or less, and maximum velocity must be less than 1 ft/s, as calculated by dividing the maximum flow by the entire *fine trash rack* area. The support structure for the *fine trash rack* must not interfere with cleaning requirements and must provide access for debris raking and removal. The *fine trash rack* should be installed at a 1:5 (horizontal:vertical) slope (or flatter) for ease of cleaning. The *fine trash rack* design must allow for easy maintenance, considering access for personnel, travel clearances for manual or automated raking, and removal of debris

4.3.3.1 Staff Gages and Head Differential: Staff gages must be installed to indicate head differential across the AWS intake *fine trash rack*, and must be located to facilitate observation and in-season cleaning. Head differential across the AWS intake must not exceed 0.3 feet.

4.3.3.2 Structural Integrity: AWS intake *fine trash racks* must be of sufficient structural integrity to avoid the permanent deformation associated with maximum occlusion.

4.3.4 Specific Criteria and Guidelines – AWS Screens

In instances where the AWS poses a risk to passage of juvenile salmonids (due to high head systems and convoluted flow paths, for example), during the period of juvenile out-migration(s) the AWS intake must be screened to the standards specified in Section 11. Trip gates or other alternate intakes to the AWS may be included in the design to ensure that AWS flow targets are achieved if the screen reliability is uncertain at higher flows. Debris and sediment issues may preclude the use of juvenile fish screen criteria for AWS intakes at certain sites. Passage risk through an AWS will be assessed by NMFS engineers on a site by site basis to determine whether screening of the AWS is warranted and to determine how to provide the highest reliability possible.

4.3.5 Specific Criteria and Guidelines – AWS Flow Control

AWS flow control may consist of a control gate, turbine intake flow control, or other flow control systems, located sufficiently far away from the AWS intake to ensure uniform flow distribution at the AWS *fine trash rack* for all AWS flows. AWS flow control is necessary to ensure that the correct quantity of AWS flow is discharged at the appropriate location during a full range of *forebay* water surface elevations.

4.3.6 Specific Criteria and Guidelines – AWS Excess Energy Dissipation

Excess energy must be dissipated from AWS flow prior to passage through *diffuser*s (Section 4.3.2). This is necessary to minimize surging and to induce relatively uniform velocity distribution at the *diffuser*s. Surging and non-uniform velocities may cause adult fish jumping and associated injuries or excess migration delay. Examples of methods to dissipate excess AWS flow energy include: (1) routing flow into the pool with adequate volume (Section 4.3.6.1), then through a *baffle* system (*porosity* less than 40%) to reduce surging through entrance pool *diffuser*s; (2) passing AWS flow through a turbine; (3) passing AWS flow through a series of valves, *weir*s or orifices; or (4) passing AWS flow through a pipeline with concentric rings or other hydraulic transitions designed to induce *headloss*.

4.3.6.1 Energy Dissipation Pool Volume: An energy dissipation pool in an AWS should have a minimum water volume established by the following formula:

$$V = \frac{(\gamma)(Q)(H)}{(16\ ft - lbs/s)/\ ft^3}$$

where: V = pool volume, in ft^3
γ = unit weight of water, 62.4 pounds (lb) per ft^3
Q = *fish ladder* flow, in ft^3/s
H = energy head of pool-to-pool flow, in feet

Note that the pool volumes required for AWS pools are smaller than those required for *fishway* pools. This is due to the need to provide resting areas in *fishway* pools, and because AWS systems require additional elements (*diffuser*s, valves, etc.) to dissipate energy, and are not pathways for *upstream fish passage*.

4.3.7 Specific Criteria and Guidelines – AWS Design (General)

4.3.7.1 Cleaning: To facilitate cleaning, the AWS must be valved or gated to provide for easy shutoff during maintenance activities, and subsequent easy reset to proper operation.

4.3.8 Bedload Removal Devices: At locations where *bedload* may cause accumulations at the AWS intake, sluice gates or other simple *bedload* removal devices should be included in the design.

4.4 Transport Channels

4.4.1 Description and Purpose – Transport Channels

A *transport channel* conveys flows between different sectors of the *upstream passage facility*, providing a route for fish to pass.

4.4.2 Specific Criteria and Guidelines – Transport Channels

4.4.2.1 Velocity Range: The *transport channel* velocities must be between 1.5 and 4 ft/s, including flow velocity over or between *fishway weir*s inundated by high *tailwater*.

4.4.2.2 Dimensions: The *transport channel*s should be a minimum of 5-feet deep and a minimum of 4-feet wide.

4.4.2.3 Lighting: Ambient natural lighting should be provided in all *transport channel*s, if possible. Otherwise, acceptable artificial lighting must be used.

4.4.2.4 Design (General):

- The *transport channel*s must be of open channel design.
- Designs must avoid hydraulic transitions or lighting transitions
- *Transport channel*s must not expose fish to any moving parts.
- *Transport channel*s must be free of exposed edges that protrude from channel walls.

4.5 Fish Ladder Design

4.5.1 Description and Purpose – Fish Ladder Design

The purpose of a *fish ladder* is to convert the *total project head* at the passage impediment into passable increments, and to provide suitable conditions for fish to hold, rest, and ultimately pass upstream. The criteria provided in this section have been developed to provide conditions to pass all anadromous salmonid species upstream with minimal delay and injury

4.5.2 Common Types of Fish Ladders

*Fish ladder*s break an impediment into passable discrete steps, by utilizing a series of *fishway weir*s to divide the drop into a series of pools with different water surface elevations. Nearly all of the energy from the upstream pool is dissipated in the downstream pool volume, resulting in a series of relatively calm pools that migrating fish may use to rest, stage and ascend upstream. Examples of *fish ladder*s include the vertical slot ladder, the pool and *weir ladder*, the *weir* and orifice ladder, and the pool-chute *fish ladder*.

4.5.2.1 Vertical Slot Ladder: The vertical slot configuration is a pool type of *fish ladder* widely used for the passage of salmon and steelhead. The passage corridor typically consists of 1.0 to 1.25 foot-wide vertical slots between *fishway* pools. However, narrower slots have been used in applications for other fish species and slots may be wider in designs (or two slots may be used per *fishway weir*) where there is no *auxiliary water system* (Section 4.3). For adult anadromous salmonids, slots should never be less than 1 foot in width. The vertical slot ladder is suitable for passage impediments which have *tailrace* and *forebay* water surface elevations that fluctuate. Maximum head differential (typically associated with lowest river flows) establishes the design water surface profile, which is on average parallel to the *fishway* floor gradient. Vertical slot ladders require fairly intricate forming for concrete placement, so initial construction costs are somewhat higher than for other types of ladders.

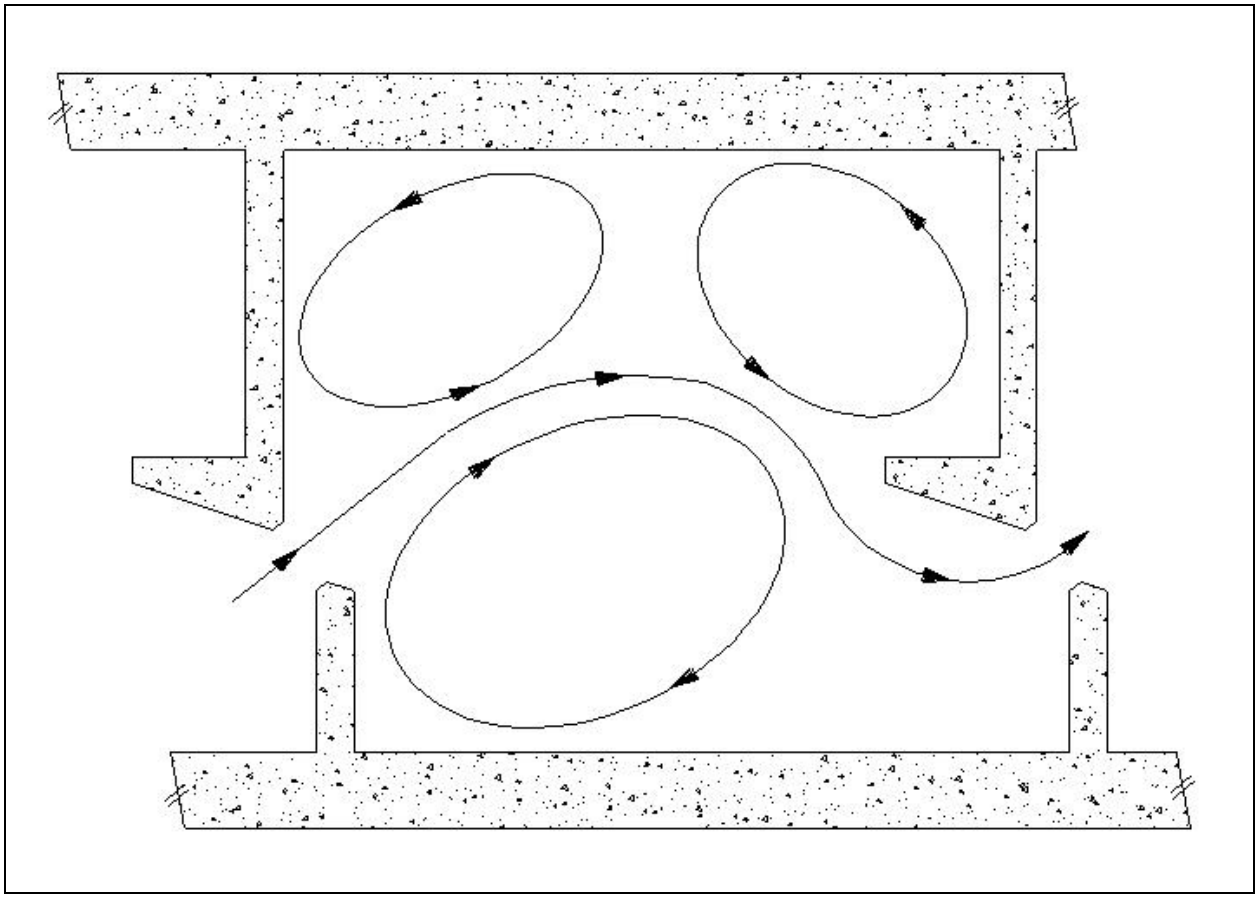

Figure 4-2a. Plan View of Vertical Slot Fishway Showing Generalized Flow Path.

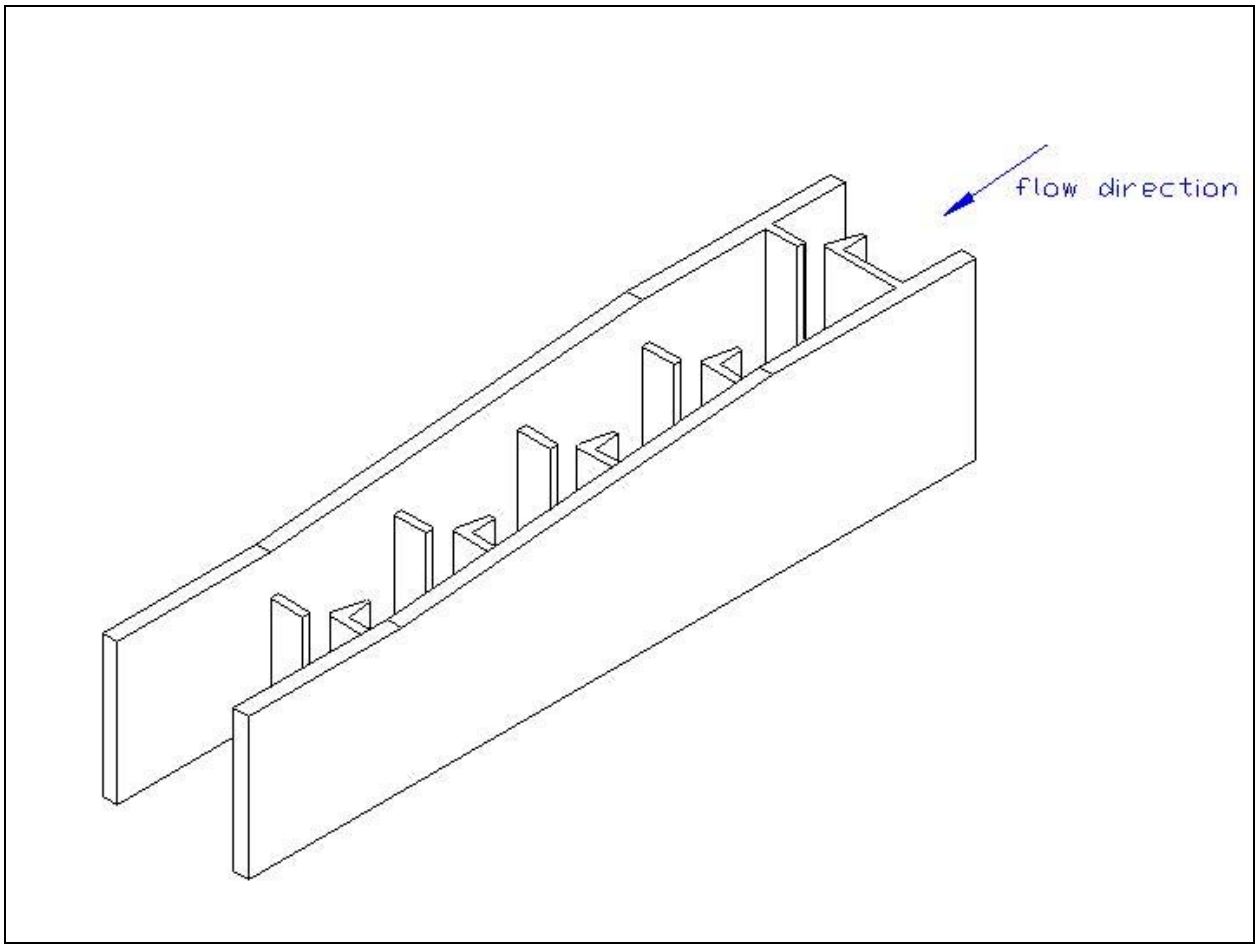

Figure 4-2b. Isometric View of Vertical Slot Fishway.

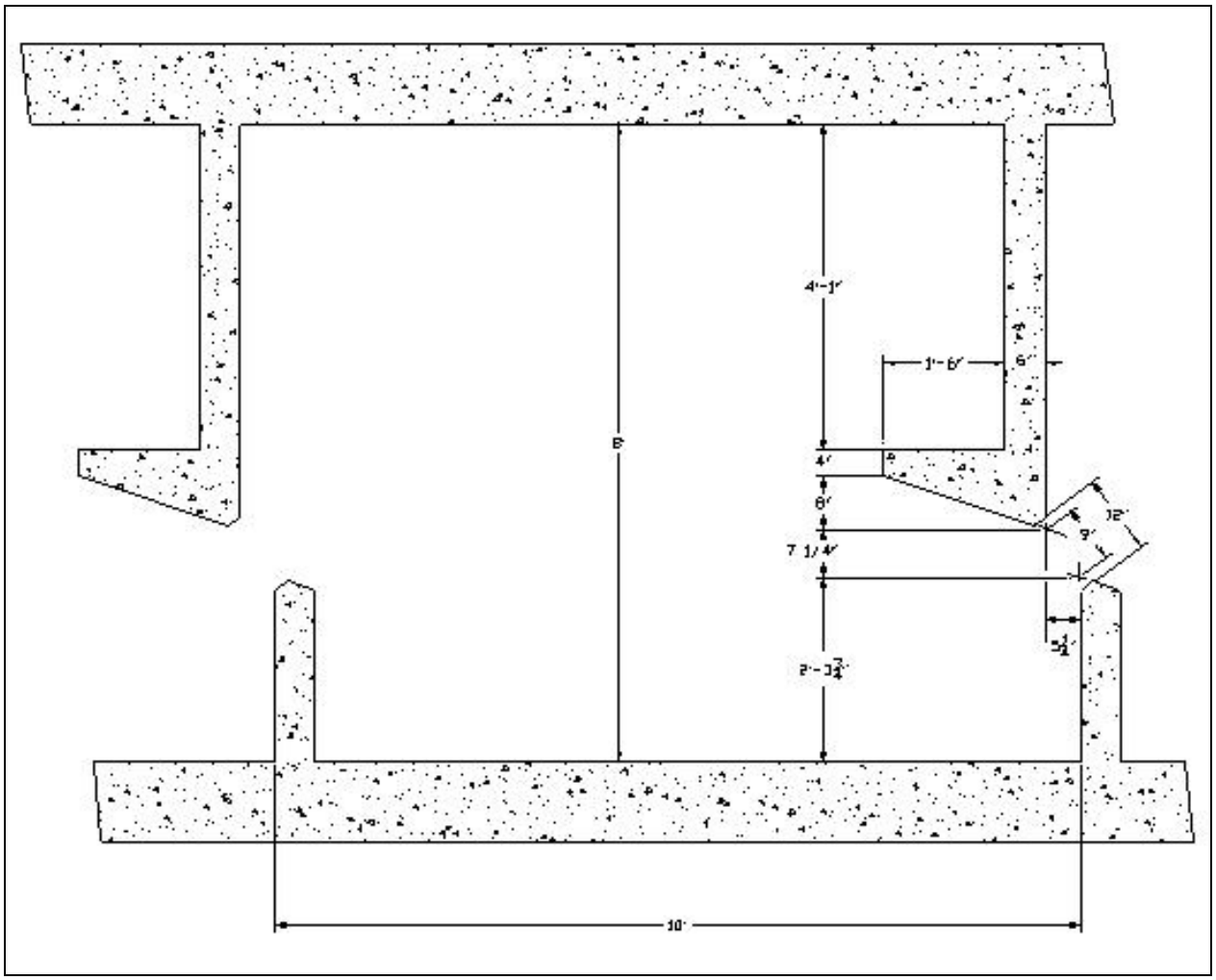

Figure 4-2c. Dimensions of a Typical Vertical Slot.

4.5.2.2 Pool and Weir Ladder: The pool and *weir fish ladder* passes the entire, nearly constant *fishway* flow through successive *fishway* pools separated by overflow *weir*s that break the *total project head* into passable increments. This design allows fish to ascend to a higher elevation by passing over a *weir*, and provides resting zones within each pool. Pools are sufficiently sized to allow for the flow energy to be nearly fully dissipated in the form of turbulence within each receiving pool. Pool and *weir* ladders cannot accommodate much, if any, water surface elevation fluctuation in the *forebay* pool. When fluctuation of water surface elevation outside of the design elevation occurs, too much or too little flow enters the *fishway*. When this happens, this flow fluctuation may lead to operation with *fishway* pools that are excessively turbulent, or provide insufficient flow for adequate upstream passage. To accommodate *forebay* fluctuations, this type of *fish ladder* is often designed with an auxiliary water supply and flow

regulation (Section 4.3). To accommodate *tailwater* fluctuations, this type of *fish ladder* is often designed with an adjustable *fishway* entrance (i.e., adjustable geometry and/or *attraction flow*) and additional add-in flow *diffuser*s to meet *transport channel* velocity criterion (Section 4.4).

4.5.2.3 Weir and Orifice Fish Ladder: The *weir* and orifice *fish ladder* passes the *fishway* flow from the *forebay* through successive *fishway* pools connected by overflow *weir*s and orifices, which divide the *total project head* into passable increments.

The Ice Harbor ladder is an example of a *weir* and orifice *fish ladder*. This ladder design was initially developed for use at Ice Harbor Dam (Lower Snake River), in the middle of the 1960's. The Ice Harbor *fishway weir* consists of two orifices, centered and directly below two *weir*s. These orifice and *weir* combinations are located on each side of the longitudinal centerline of the ladder. Between the two *weir*s is a slightly higher non-overflow wall, with an upstream projecting flow *baffle* at each end. An adaptation for lower flow designs is the Half-Ice Harbor ladder design, which consists of one *weir*, one orifice, and a non-overflow wall between *fishway* pools.

Weir and orifice ladders cannot accommodate much, if any, water surface elevation fluctuation in the *forebay* pool. When fluctuation of water surface elevation outside of the design elevation occurs, too much or too little flow enters the *fishway*. When this happens, this flow fluctuation may lead to operation with *fishway* pools that are excessively turbulent, or provide insufficient flow for adequate upstream passage. To accommodate *forebay* fluctuations, this type of *fish ladder* is often designed with an auxiliary water supply and flow regulating section (Sections 4.3). To accommodate *tailwater* fluctuations, this type of *fish ladder* is often designed with an adjustable *fishway* entrance (i.e., adjustable geometry and/or *attraction flow*) and additional add-in flow *diffuser*s to meet *transport channel* velocity criterion (Section 4.4).

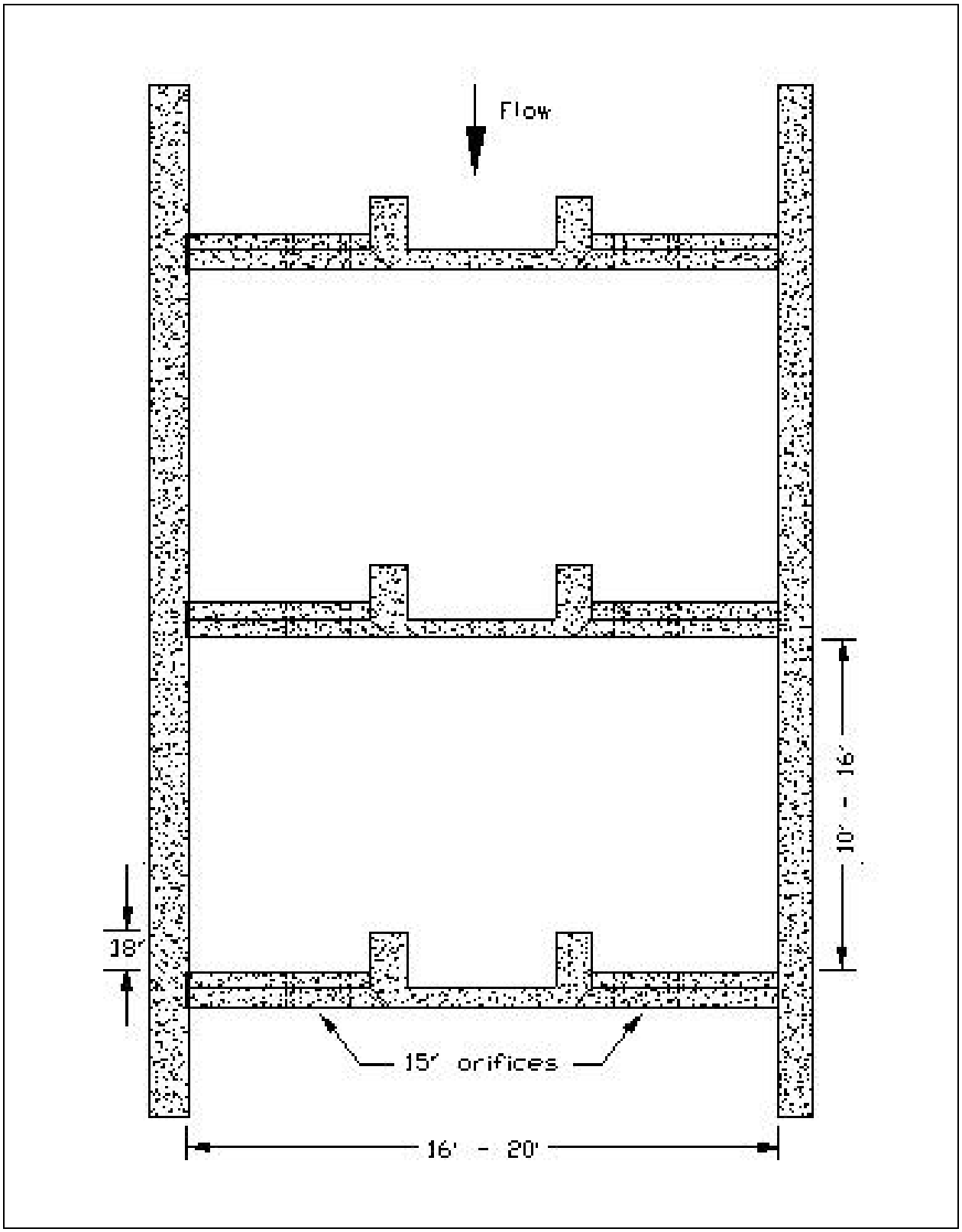

Figure 4-3a. Plan View of an Ice Harbor Type Weir and Orifice Fish Ladder

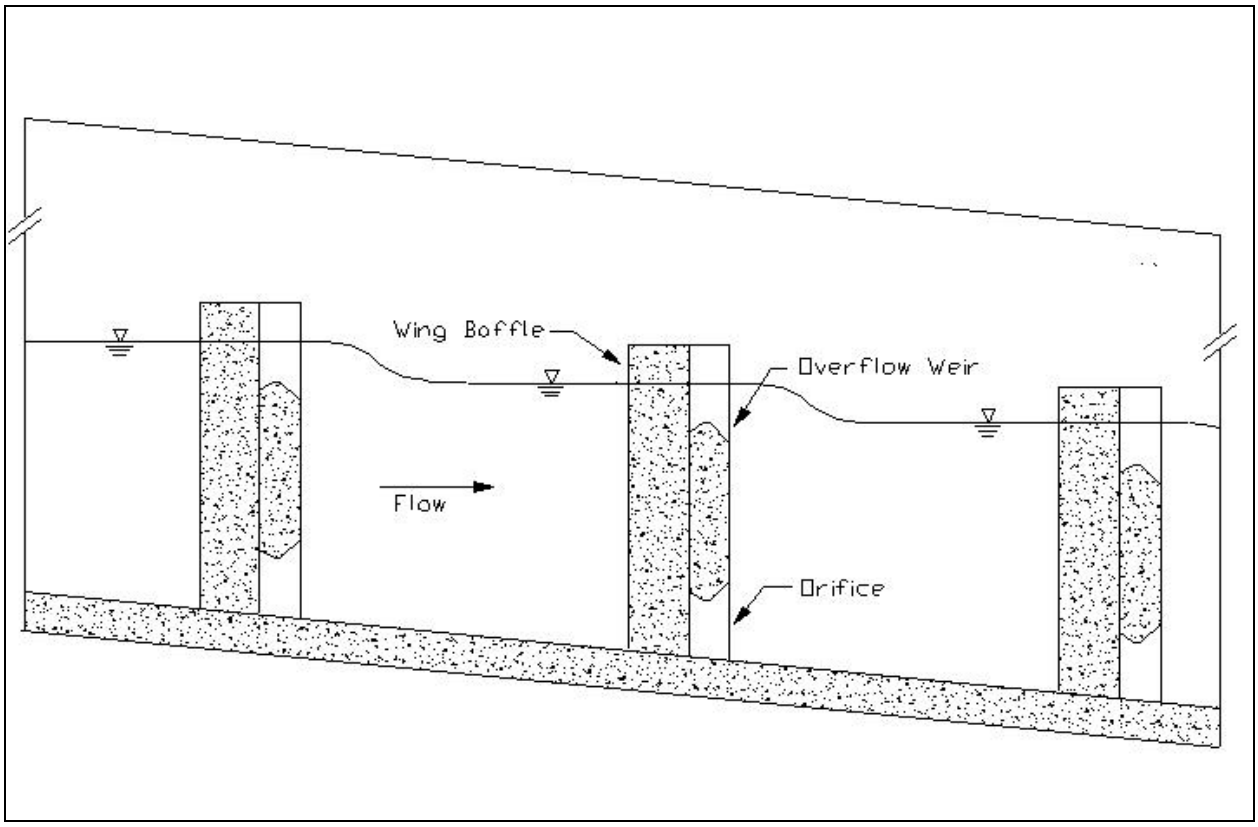

Figure 4-3b. Longitudinal Cross-section of an Ice Harbor Type Weir and Orifice Fish Ladder

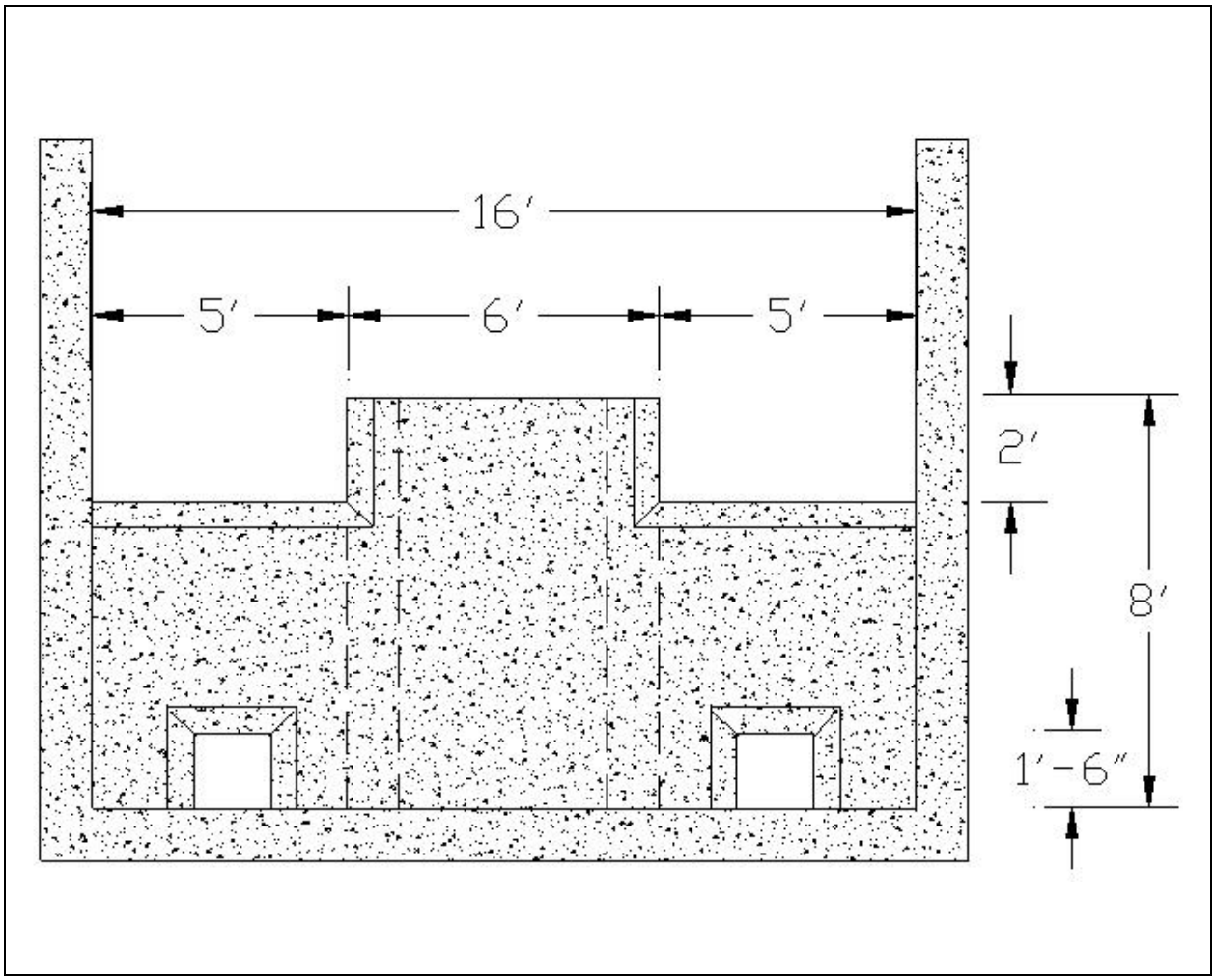

Figure 4-3c. Front View Cross-section of Ice Harbor Fishway Baffle

4.5.2.4 Pool-Chute Fish Ladder: A pool and chute *fishway* is a hybrid type of *fishway* which operates with different flow regimes under different river conditions. This *fishway* is designed to operate as a pool and *weir fishway* at low river flows and a baffled chute *fishway* at higher river flows. This *fishway* offers an alternative for sites that have fairly low *hydraulic drop*, and must pass a wide range of stream flows with a minimum of flow control features. Placement of stoplogs, a cumbersome and potentially hazardous operation, is required to optimize operation. However, once suitable flow regimes are established, the need for additional stoplog placement may not be required. Criteria for this type of *fishway* design are still evolving, and design proposals will be assessed on a site-specific basis.

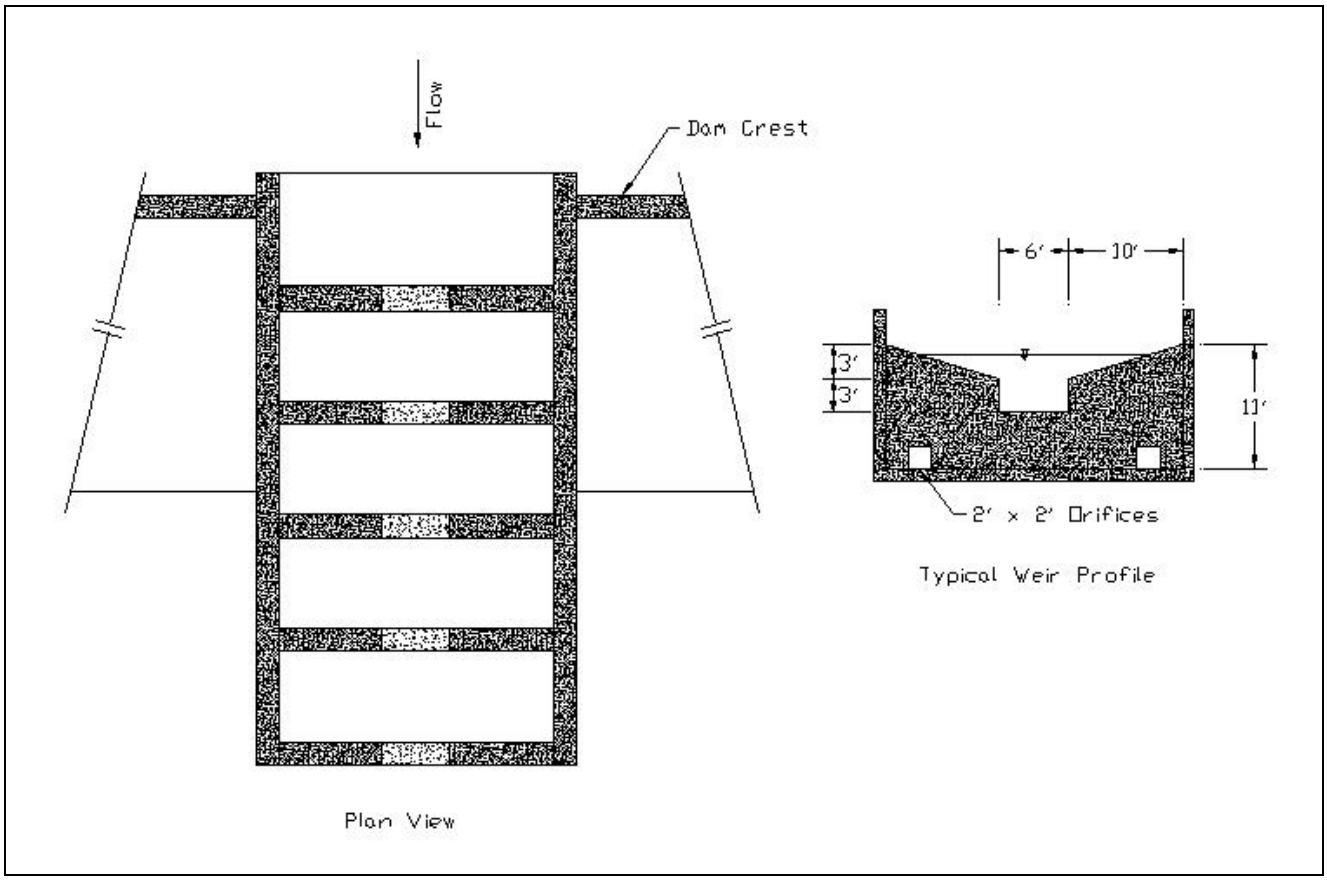

Figure 4-4. Pool and Chute Fishway

4.5.3 Specific Criteria and Guidelines – Fish Ladder Design

4.5.3.1 Hydraulic Drop: The maximum *hydraulic drop* between *fish ladder* pools must be 1 foot or less.

4.5.3.2 Flow Depth: *Fishway* overflow *weir*s should be designed to provide at least 1 foot of flow depth over the *weir* crest. The depth must be indicated by locating a single staff gage (with the zero reading at the overflow *weir* crest elevation) in an observable, hydraulically stable location, representative of flow depth throughout the fishway.

4.5.3.3. Pool Dimensions: The pool dimensions should be a minimum of 8 feet long (upstream to downstream), 6 feet wide, and 5 feet deep. However, specific ladder designs may require pool dimensions that are different than the minimums specified here depending on site conditions and ladder flows.

4.5.3.4 Turning Pools: Turning pools (i.e., where the *fishway* bends more than 90°) should be at least double the length of a standard *fishway* pool, as measured along the centerline of the *fishway* flow path. The orientation of the upstream

weir to the downstream *weir* must be such that energy from flow over the upstream *weir* does not affect the hydraulics of the downstream *weir*.

4.5.3.5 Pool Volume: The *fishway* pools must be a minimum water volume of:

$$V = \frac{(\gamma)(Q)(H)}{(4\ ft - lbs/s)/\ ft^3}$$

where: V = pool volume, in ft^3
γ = unit weight of water, 62.4 pounds (lb) per ft^3
Q = *fish ladder* flow, in ft^3/s
H = energy head of pool-to-pool flow, in feet

This pool volume must be provided under every expected design flow condition, with the entire pool volume having active flow and contributing to energy dissipation.

4.5.3.6 Freeboard: The *freeboard* of the ladder pools must be at least 3 feet at high design flow.

4.5.3.7 Orifice Dimensions: The dimensions of orifices should be at least 15 inches high by 12 inches wide, with the top and sides chamfered 0.75 inches on the upstream side, and chamfered 1.5 inches on the downstream side of the orifice.

4.5.3.8 Lighting: Ambient lighting is preferred throughout the *fishway*, and in all cases abrupt lighting changes must be avoided.

4.5.3.9 Change in Flow Direction: At locations where the flow changes direction more than 60°, 45° vertical miters or a 2 foot vertical radius of curvature must be included at the outside corners of *fishway* pools.

4.6 Counting Stations

4.6.1 Description and Purpose – Counting Stations

A counting station provides a location to observe and enumerate fish utilizing the fish passage facility. Although not always required, a typical counting station including a camera or fish count technician, *crowder,* and counting window is often included in a *fishway* design to allow fishery managers to assess fish populations, provide observations on fish health, or conduct scientific research. Other types of counting stations (such as submerged cameras, adult PIT-*tag detectors*, or orifice counting tubes) may be acceptable, but they must not interfere with the normal operation of the ladder or increase fish passage delay.

4.6.2 Specific Criteria and Guidelines – Counting Stations

4.6.2.1 Location: Counting stations must be located in a hydraulically stable, low velocity (i.e., around 1.5 ft/sec), accessible area of the *upstream passage facility*.

4.6.2.2 Downstream/Upstream Pools: The pool downstream of the counting station must extend at least two standard *fishway* pool lengths from the downstream end of the *picket leads*. The pool upstream of the counting station must extend at least one standard *fishway* pool length from the upstream end of the *picket leads*. Both pools must be straight and in line with the counting station.

4.6.3 Specific Criteria and Guidelines – Counting Window

4.6.3.1 Design and Material: The counting window must be designed to allow complete, convenient cleaning with sufficient frequency to ensure sustained window visibility and accurate counts. The counting window material must be of sufficient abrasion resistance to allow frequent cleaning.

4.6.3.2 Orientation: Counting windows must be vertically oriented.

4.6.3.3 Sill: The counting window sill should be positioned to allow full viewing of the passage slot.

4.6.3.4 Lighting: The counting window design must include sufficient indirect artificial lighting to provide satisfactory fish identification at all hours of operation, without causing passage delay.

4.6.3.5 Dimensions: The minimum observable width (i.e., upstream to downstream dimension) of the counting window must be 5 feet, and the minimum height (depth) should be full water depth (also see Section 4.6.3.6).

4.6.3.6 Width: The minimum width of the counting station slot between the counting window and back vertical counting window surface should be 18 inches. The design must include an adjustable *crowder* to move fish closer to the counting window to allow fish counting under turbid water conditions. The counting window slot width should be maximized as water clarity allows, and when not actively counting fish.

4.6.3.7 Picket Lead: To guide fish into the counting window slot, a downstream picket lead must be included in the design. The downstream picket lead must be oriented at a deflection angle of 45° relative to the direction of *fishway* flow. An upstream picket lead oriented 45° to the flow direction must also be provided. Picket orientation, picket clearance, and maximum allowable velocity must conform to specifications for *diffuser*s (Section 4.3.2). *Picket leads* may be comprised of flat stock bars oriented parallel to flow, or other cross-sectional shapes, if approved by NMFS. Combined maximum head differential through

both sets of *pickets* must be less than 0.3 feet. Both upstream and downstream *picket leads* must be equipped with "witness marks" to verify correct position when *picket leads* are installed in the *fishway*. A one foot square opening should be provided in the upstream picket lead to allow escape if smaller fish pass through the downstream picket lead.

4.6.3.8 Transition Ramps: To minimize flow separations created by *head loss* that may impede passage and induce fallback behavior at the counting window, transition ramps must be included. These ramps provide gradual transitions between walls, floors and the count window slot. As general guidance, these transitions should be more gradual than 1:8 (vertical:horizontal). A free water surface must exist over a counting window.

4.7 Fishway Exit Section

4.7.1 Description and Purpose – Fishway Exit Section

The *fishway* exit section provides a flow channel for fish to egress through the *fishway* and continue on their upstream migration. The exit section of *upstream fish passage* facilities may include the following features: add-in auxiliary water valves and/or *diffuser*s, exit pools with varied flow, exit channels, *coarse trash rack* (for fish passage), and auxiliary water *fine trash racks* and control gates. One function of the exit section is to attenuate *forebay* water surface elevation fluctuation, thus maintaining hydraulic conditions suitable for fish passage in ladder pools. Other functions should include minimizing the entrainment of debris and sediment into the *fish ladder*. Different types of ladder designs (Section 4.5) require specific *fish ladder* exit design details.

4.7.2 Specific Criteria and Guidelines – Fishway Exit Section

4.7.2.1 Hydraulic Drop: The *exit control section hydraulic drop* per pool should range from 0.25 to 1.0 feet.

4.7.2.2 Length: The length of the exit channel upstream of the *exit control section* should be a minimum of two standard ladder pools.

4.7.2.3 Design Requirements: Exit section design must utilize the requirements for auxiliary water *diffuser*s, channel geometry, and energy dissipation as specified in Sections 4.3, 4.4 and 4.5.

4.7.2.4 Location: In most cases, the ladder exit should be located along a shoreline and in a velocity zone of less than 4 ft/s, sufficiently far enough upstream of a spillway, sluiceway or powerhouse to minimize the risk of fish non-volitionally falling back through these routes. Distance of the ladder exit with respect to the hazards depends on bathymetry near the dam spillway or crest, and associated longitudinal river velocities.

4.7.2.5 Public Access: Public access near the ladder exit should not be allowed.

4.8 Fishway Exit Sediment and Debris Management

4.8.1 Description and Purpose – Fishway Exit Sediment and Debris Management

For large facilities where maintenance is frequently required and provided, *coarse trash racks* should be included at the *fishway* exit, to minimize the entrainment of debris into the *fishway*. Floating debris may partially block passage corridors, potentially creating hazardous passage zones and/or blocking fish passage. Other types of debris, such as sediment transport into the *fishway*, may also adversely affect the operation of the facility.

4.8.2 Specific Criteria and Guidelines – Coarse Trash Rack

4.8.2.1 Velocity: The velocity through the gross area of a clean *coarse trash rack* should be less than 1.5 ft/s.

4.8.2.2 Depth: The depth of flow through a *coarse trash rack* should be equal to the pool depth in the *fishway*.

4.8.2.3 Maintenance: The *coarse trash rack* should be installed at 1:5 (horizontal:vertical) slope (or flatter) for ease of cleaning. The *coarse trash rack* design must allow for easy maintenance, considering access for personnel, travel clearances for manual or automated raking, and removal of debris.

4.8.2.5 Bar Spacing: The *fishway* exit *coarse trash rack* should have a minimum clear space between vertical flat bars of 10 inches if Chinook salmon are present, and 8 inches in all other instances. Lateral support bar spacing must be a minimum of 24 inches, and must be sufficiently back set of the *coarse trash rack* face to allow full trash rake tine penetration. *Coarse trash racks* must extend to the appropriate elevation above water to allow easy removal of raked debris.

4.8.2.6 Orientation: The *fishway* exit *coarse trash rack* must be oriented at a deflection angle greater than 45° relative to the direction of river flow.

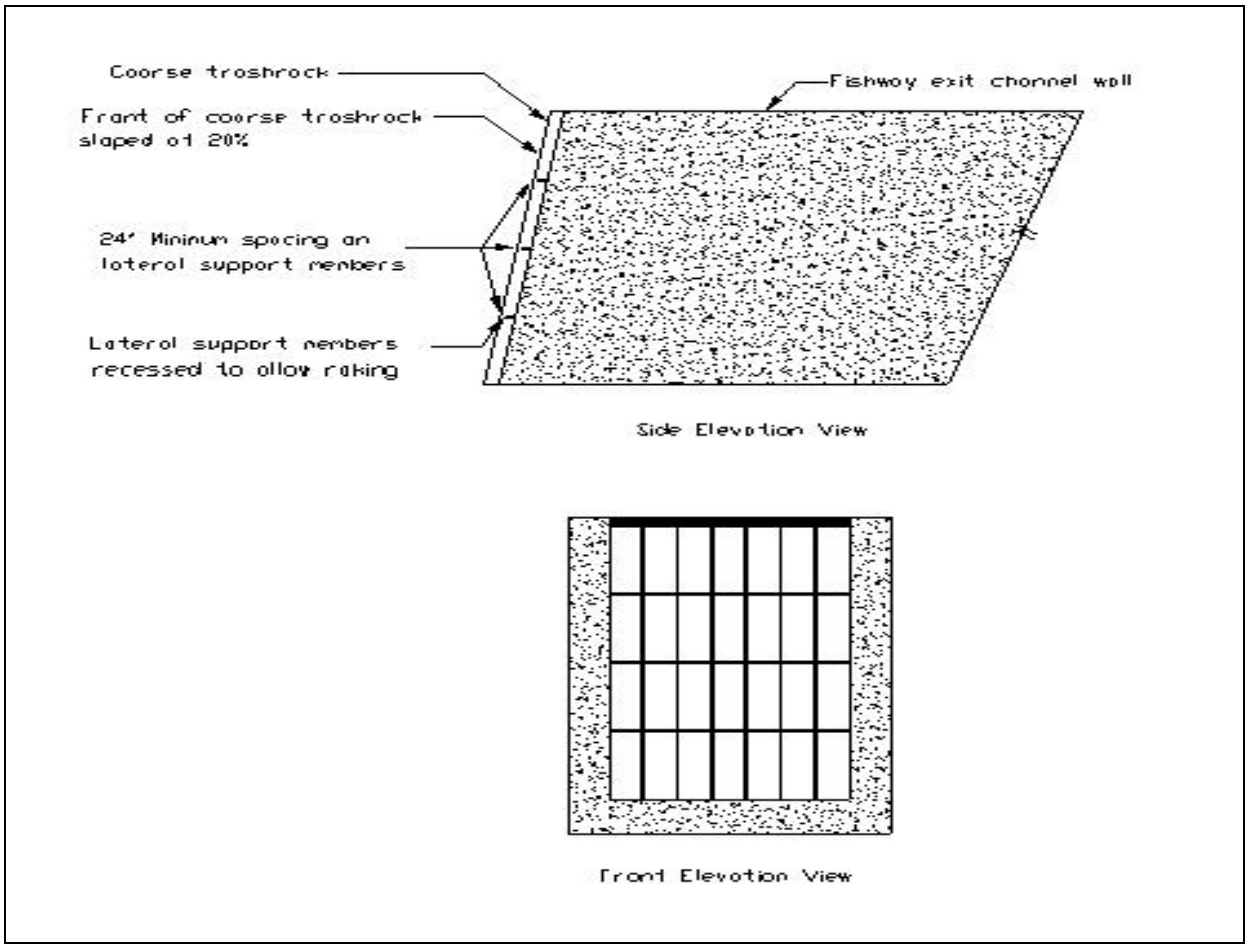

Figure 4-5. Coarse Trashrack

4.8.3 Specific Criteria and Guidelines – Debris and Sediment

4.8.3.1 Coarse Floating Debris: Debris booms, curtain walls, or other provisions must be included in design if coarse floating debris is expected.

4.8.3.2 Debris Accumulation: If debris accumulation is expected to be high, the design should include an automated mechanical debris removal system. If debris accumulation potential is unknown, the design should anticipate the need in the future and include features to allow possible retrofit of an automated mechanical debris removal system.

4.8.3.2 Sediment Entrainment and Accumulation:

- The *fishway* exit should be designed to minimize entrainment of sediment.
- The facility should be designed such that it does not accumulate sediment or debris during normal operation.

4.9 Miscellaneous Considerations

4.9.1 Specific Criteria and Guidelines – Miscellaneous

4.9.1.1 Security: *Fishway*s should be secured to discourage vandalism, preclude poaching opportunity, and to provide public safety.

4.9.1.2 Lighting: Natural lighting should be consistently provided throughout the *fishway*. Where this is not possible (such as in tunnels), artificial lighting should be provided in the blue-green spectral range. Lighting must be designed to operate under all environmental conditions at the installation.

4.9.1.3 Access: Personnel access must be provided to all areas of the *fishway*, to facilitate operational and maintenance requirements. Walkway grating should allow as much ambient lighting into the *fishway* as possible.

4.9.1.4 Edge/Surface Finishes: All metal edges in the flow path used for fish migration must be ground smooth to minimize risk of lacerations. Concrete surfaces must be finished to ensure smooth surfaces, with one-inch wide 45° corner chamfers.

4.9.1.5 Protrusions: Protrusions (such as valve stems, bolts, gate operators, pipe flanges etc.) must not extend into the flow path of the *fishway*.

4.9.1.6 Exposed Control Gates: All control gates exposed to fish (for example, entrances in the fully-open position) must have a shroud or be recessed to minimize or eliminate fish contact.

4.9.1.7 Maintenance Activities: To ensure fish safety during in-season fishway maintenance activities, all *fish ladder*s must be designed to provide a safe egress route or safe holding areas for fish prior to any temporary (i.e., less than 24 hours) dewatering. Longer periods of fishway dewatering for scheduled ladder maintenance must occur outside of the passage season with safeguards in place to allow evacuation of fish in a safe manner.

4.10 Roughened Chutes

4.10.1 Description and Purpose – Roughened Chutes

Another general type of fish passage system is the roughened chute, which consists of a hydraulically roughened channel with near continuous energy dissipation throughout its length. Three examples of a roughened chute passage are a *baffled* chute (including steeppass and Denil *fishway*s) (Section 4.10.2.1), a roughened channels (Section 4.10.2.2) and full width stream *weirs* (Section 4.10.2.3).

4.10.2 Types of Roughened Chutes

4.10.2.1 Baffled Chutes (Denil and Steeppass Fishways): Denil and steeppass *fishway*s are examples of roughened chute *fishway*s and are of similar design philosophy. This type of *fishway* has excellent fish attraction characteristics when properly sited and provides good passage conditions using relatively low flow amounts. Denil and steeppass *fishway*s are used mainly for sites where the fishway can be closely monitored, such as off-ladder fish trap designs or temporary fishways used during construction of permanent passage facilities. Debris accumulation in any fishway, in combination with turbulent flow, may injure fish or render the fishway impassable. Because of their baffle geometry and narrow flow paths, Denil and steeppass *fishway*s are especially susceptible to debris accumulation. As such, they must not be used in areas where downstream passage occurs, or where even minor amounts of debris are expected.

Denil and steeppass *fishway*s are designed with a sloped channel that has a constant discharge for a given normal depth, chute gradient, and *baffle* configuration. Energy is dissipated consistently throughout the length of the *fishway* via channel roughness, and results in an average velocity compatible with the swimming ability of adult salmonids. The passage corridor consists of a chute flow between and through the *baffles*. There are unique aspects of Denil or steeppass *fishway*s that need to be carefully considered. First, there are no resting locations within a given length of Denil and steeppass *fishway*s. Therefore, once a fish starts to ascend a length of a steeppass or Denil, it must pass all the way upstream and exit the fishway, or risk injury when falling back downstream. If the Denil or steeppass *fishway* is long, intermediate resting pools may be included in the design, located at intervals determined by the swimming ability of the weakest target species.

The Denil *fishway* generally is designed with slopes up to 20%, and has higher flow capacity and less roughness than a steeppass *fishway*. Steeppass *fishway*s may be used at slopes up to 28%. For either *fishway*, the average chute design velocity should be less than 5 ft/s. For an *upstream passage facility* utilizing a Denil or a steeppass ladder, the horizontal distance between resting pools should be less than 25 feet. Resting pool volumes must adhere to volume requirements specified in Section 4.5.3.5. The minimum flow depth in a Denil *fishway* should be 2 feet, and in a steeppass *fishway* the minimum flow depth should be 1.5 feet, and depth must be consistent throughout the *fishway* for all ladder flows. Denil and steeppass *fishway*s must be located to minimize the potential for fallback of fish.

4.10.2.2 Roughened Channels: Another general category of *upstream fish passage* is termed a roughened channel, where design involves the selection of appropriately sized streambed material placed in such a way as to mimic the configuration in the natural streambed. These are also referred to as stream or streambed simulation, rock channels, or nature-like *fishway*s. By replicating

natural stream conditions, a wide variety of life stages and species of fish may be able to utilize the roughened channel for passage. In addition, roughened channels may provide additional benefits to other species such as insects, mollusks, and crustaceans. Roughened channels may not always be the appropriate design choice. This is a relatively new technology without a developed and proven design methodology, and the effectiveness for passing specific species and life stages over a wide flow range, and the long term durability of a wide range of designs has yet to be established. It is expected that through careful engineering and construction techniques, and through monitoring of design uncertainties over time, especially regarding the durability of the roughened channel structure, future design uncertainty can be reduced. If passage conditions in the constructed roughened channel can be achieved that are similar to the downstream passage conditions in the natural stream, there is reason to expect that a properly constructed roughened channel may pass all life stages and species that arrive at the constructed roughened channel.

Designs of roughened channels vary depending on the specific site conditions. Criteria for this type of passage design are evolving, and proposals for this type of ladder assessed on a site-specific basis. In general, roughened channels should only be used when:

- Channel slope using stream simulation is less than 6%.
- Total length of passage is less than 150 feet.
- An appropriate mix of bed materials (from fines to boulder sized material) are used such that flow depths of at least 1 foot can be maintained for upstream adult salmonid passage.
- Sub-surface flow will be minimized by filling voids between larger materials with finer-sized material. Guidance on the mixture of fill material is still evolving, but general guidance is provided in Washington Department of Fish and Wildlife (WDFW) 2003.

The arrangement of bed materials should demonstrate channel complexity similar to the characteristics of the adjacent stream reaches. To minimize the potential for head-cutting to occur, discrete *hydraulic drop*s across the entire width of the roughened channel should be avoided. It should be demonstrated in the design analysis that any scouring of fines from the constructed channel will be refilled by subsequent *bedload* transport and aggradations. It is noted that if the channel roughness of adjacent stream reaches is heavily influenced by woody debris, it may be difficult to mimic this condition with any sort of constructed roughened channel.

Since this design method is an evolving technology, any site utilizing a constructed roughened channel must include an annual (at a minimum) monitoring plan at least until after a 50-year stream flow event has occurred. Monitoring must include an assessment of passage conditions and/or maintenance of original design conditions, and repaired as necessary to accomplish design passage conditions. The loss of placed bed material after a high flow event will

result in loss of flow through the channel substrate, and may render a roughened channel too shallow for fish passage. Criteria for this type of *fishway* design are still evolving, and design proposals will be assessed on a site-specific basis.

4.10.2.3 Full Width Stream Weirs: Full width (i.e., full stream width) *weir*s provide fish passage by incrementally *backwatering* an impassable barrier or impediment. These structures span the entire width of the stream channel and convey the entire stream flow, breaking the *hydraulic drop* into passable increments. This is accomplished by incrementally stepping down the water surface elevation from the barrier to intersect the natural stream gradient downstream.

Unlike many of the *fishway*s described herein, these structures are not designed with auxiliary water supply systems, *trashrack*s, or a great deal of operational complexity. *Weir*s may be constructed from reinforced concrete, or in limited applications, boulders or logs. Since boulders must be large, and usually have unpredictable dimension, a result can be the lack of the desired water surface differential for the range of design streamflows. It is especially difficult to maintain the required water surface elevation differential between *weir*s (maximum of 1.0 feet) when the design must encompass a wide flow range (tens to thousands of cfs) typical in a Northwest stream. In applications that require precision rock placement for maintenance of *hydraulic drop* between *weir*s, for long-term predictability, some applications may require regular maintenance to bring the projects back to design standards. The result is additional instream work that may produce continuing impacts to habitat and fish. These factors must be considered and accommodated before choosing this design for a site.

Design of each *weir* must concentrate flow into the center of the downstream pool, and/or direct flow toward the downstream *thalweg*. This concentration is accomplished by providing a slight *weir* crest elevation decrease from each bank to the center (flow notch). Typically, the flow notch will be designed to pass the minimum instream flow, while higher stream flows pass over the entire *weir* crest. Natural *bedload* movement will fill in pools providing a scour pool area below the flow notch, and shallower fringe areas.

Scour is a critical and often underestimated design issue. If sills and *weir*s are not anchored on bedrock, a means of preventing undermining is required, using embedded anchor boulders or other such means of stabilizing the streambed. If a pool lining technique is selected to prevent undermining of the *fishway*, a minimum of 4 feet of depth should be provided in each pool and in the *tailrace* below the *fishway*. This allows for a fish to stage or hold below each *weir* before proceeding upstream. In addition, the *tailrace* area should be protected from scour to prevent lowering of the streambed, and should be monitored after high flows occur to ensure the facility remains passable. Criteria for this type of *fishway* design are still evolving, and design proposals will be assessed on a site-specific basis.

5. EXCLUSION BARRIERS

5.1 Introduction – Exclusion Barriers

Exclusion barriers are designed to minimize the attraction and stop the migration of upstream migrating fish into an area where there is no upstream egress or suitable spawning area, and to guide fish to an area where upstream migration may continue. *Exclusion barriers* may also be used to restrict movement of undesirable species into habitat. *Exclusion barriers* are designed to minimize the potential for injury of fish that are attracted to impassable routes.

Some examples of the use of *exclusion barriers* include:

- preventing fish from entering return flow from an irrigation ditch
- preventing fish from entering the *tailrace* of a power plant
- guiding fish to a trap facility for upstream transport, research, or broodstock collection
- guiding fish to a counting facility
- preventing fish from entering a channel subject to sudden flow changes
- preventing fish from entering turbine draft tubes
- preventing fish from entering channels with poor spawning gravels, poor water quality or insufficient water quantity.

5.2 Types of Exclusion Barriers

The two primary categories of *exclusion barriers* are picket barriers and velocity barriers. Another type of exclusion barrier is a vertical drop structure, which provides a jump height that exceeds the vertical leaping ability of fish. Other types of barriers, such as electric and acoustic fields, have very limited application because of inconsistent results most often attributed to varying water quality (turbidity, specific conductance).

Criteria are specific standards for fishway design, maintenance, or operation that cannot be changed without a written waiver from NMFS. For the purposes of this document, a criterion is preceded by the word "must." In general, a specific criterion can not be changed unless there is site-specific biological rationale for doing so. An example of biological rationale that could lead to criterion waiver is a determination or confirmation by NMFS biologists that the smallest fry-sized fish will likely not be present at a proposed screen site. Therefore, the juvenile fish screen approach velocity criterion of 0.4 ft/s could be increased to match the smallest life stage expected at the screen site. A guideline is a range of values or a specific value for fishway design, maintenance or operation that may change when site-specific conditions are factored into the conceptual fishway design. For the purposes of this document guidelines are preceded by the word "should." Guidelines should be followed in the fishway design until site-specific information indicates that a different value would provide better fish passage conditions or solve site-specific issues. An example of site-specific rationale that could lead to a modified guideline is when the maximum river depth at a site is 3 feet, as compared to the design guideline for a fishway entrance depth of 6 feet. In this example, safe and

timely fish passage could be provided by modifying the guideline to match the depth in the river. It is the responsibility of the applicant to provide compelling evidence in support of any proposed waiver of criteria or modification of a guideline for NMFS approval early in the design process, well in advance of a proposed Federal action. After a decision to provide passage at a particular site has been made, the following design criteria and guidelines are applicable, in addition to those described throughout Section 3.

5.3 Picket Barriers

5.3.1 Description and Purpose – Picket Barriers

Picket barriers diffuse nearly the entire streamflow through *pickets* extending the entire width of the impassable route, sufficiently spaced to provide a physical barrier to upstream migrant fish. This category of exclusion barrier includes a fixed bar rack and a variety of hinged floating *picket weir* designs. Picket barriers usually require removal for high flow events, increasing the potential to allow passage into undesirable areas.

In general, since the likelihood of impinging fish is very high, these types of barriers cannot be used in waters containing species listed under the ESA, unless they are continually monitored by personnel on site, and have a sufficient operational plan and facility design in place to allow for timely removal of impinged or stranded fish prior to the occurrence of injury. Since debris and downstream migrant fish must pass through the *pickets*, sites for these types of *exclusion barriers* must be carefully chosen. Picket barriers must be continually monitored for debris accumulations, and debris must be removed before it concentrates flow and violates the criteria established below. As debris accumulates, the potential for the impingement of downstream migrants (e.g., juvenile salmonids, *kelts*, adult salmon, or resident fish) increases to unacceptable levels. Debris accumulations may also concentrate flow through the remainder of the open picket area, increasing the attraction of upstream migrants to these areas and thereby increasing the potential for jumping injury or successful passage into areas without egress.

5.3.2 Specific Criteria and Guidelines - Picket Barriers

5.3.2.1 Openings: The clear opening between *pickets* and between *pickets* and abutments must be less than or equal to 1 inch. A tighter opening may be required if resident species are also to be excluded by the design.

5.3.2.2 Average Design River Velocity: The average design river velocity through *pickets* should be less than 1.0 ft/s for all design flows, with maximum velocity less than 1.25 ft/s, or half the velocity of adjacent passage route flows whichever is lower. The average design velocity is calculated by dividing the flow by the total submerged picket area over the design range of stream flows. When river velocities exceed these criteria, the picket barrier must be removed.

5.3.2.3 Head Differential: The maximum head differential across the *pickets* must never exceed 0.3 feet over the clean picket condition. If this differential is exceeded, the *pickets* must be cleaned as soon as possible.

5.3.2.4 Debris and Sediment: A debris and sediment removal plan must be considered in the design that anticipates the entire range of conditions expected at the site. Debris must be removed before accumulations develop that violate the criteria specified in 5.3.2.2 and 5.3.2.3.

5.3.2.5 Orientation of Picket Barrier: *Pickets* barriers must be designed to lead fish to a safe passage route. This may be achieved by angling the picket barrier toward a safe passage route, providing nearly uniform velocities through the entire length of *pickets*, and providing sufficient *attraction flows* from a safe passage route that minimizes the potential for false attraction to the picket barrier flows.

5.3.2.6 Picket Freeboard: The minimum picket extension above the water surface at high fish passage design flow is 2 feet.

5.3.2.7 Submerged Depth: The minimum submerged depth at the picket barrier at low design discharge must be two feet for at least 10% of the river cross section at the barrier. Picket barriers should be sited where there is a relatively constant depth over the entire stream width.

5.3.2.8 Picket Porosity: The picket array must have a minimum of 40% open area.

5.3.2.9 Picket Construction Material: *Pickets* must be comprised of flat bars aligned with flow, or round columns of steel, aluminum, or durable plastic. Picket panels should be of sufficient structural integrity to withstand high streamflows.

5.3.2.10 Picket Sill: A uniform concrete sill, or an alternative approved by NMFS engineering staff, should be provided to ensure that fish do not pass under the picket barrier.

5.4 Velocity Barriers

5.4.1 Description and Purpose – Velocity Barriers

A velocity barrier consists of a *weir* and concrete *apron* combination that prevents upstream passage by producing a shallow flow depth and high velocity on the *apron*, followed by an impassable vertical jump over the *weir*. A velocity barrier does not have the previously mentioned problems of a *picketed weir* barrier, since flow passes freely

over a *weir*, allowing the passage of debris and downstream migrant fish. However, since this type of barrier creates an upstream impoundment, the designer must consider *backwater* effects that may induce loss of power generation or property inundation upstream of the velocity barrier.

5.4.2 Specific Criteria and Guidelines - Velocity Barrier

5.4.2.1 Weir Height: The minimum *weir* height relative to the maximum *apron* elevation is 3.5 feet.

5.4.2.2 Apron Length: The minimum *apron* length (extending downstream from base of *weir*) is 16 feet.

5.4.2.3 Apron Slope: The minimum *apron* downstream slope is 16:1 (horizontal:vertical).

5.4.2.4 Weir Head: The maximum head over the *weir* crest is 2 feet. Other combinations of *weir* height and *weir* crest head may be approved by NMFS Hydropower Division staff on a site-specific basis.

5.4.2.5 Downstream apron elevation: The elevation of the downstream end of the *apron* must be greater than the *tailrace* water surface elevation corresponding to the high design flow.

5.4.2.6 Flow ventilation: The flow over the *weir* must be fully and continuously vented along the entire weir length, to allow a fully aerated flow nappe to develop between the *weir* crest and the *apron*. Full aeration of the flow nappe prevents an increase in water surface behind the nappe, which may allow fish to stage and jump the *weir*.

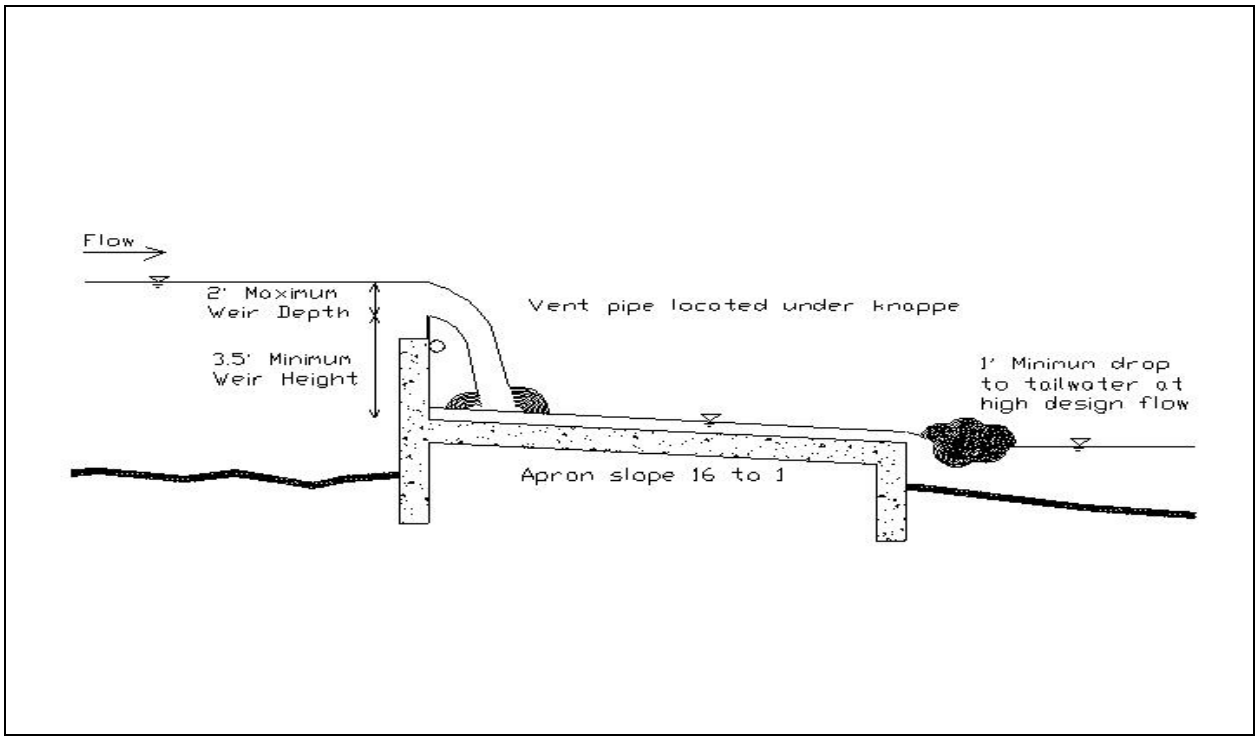

Figure 5-1. Velocity Barrier

5.5 Vertical Drop Structures

5.5.1 Description and Purpose - Vertical Drop Structures

A vertical drop structure can function as an exclusion barrier by providing *head* in excess of the leaping ability of the target fish species. These can be a concrete monolith, rubber dam, bottom-hinged leaf gate or approved alternative.

5.5.2 Specific Criteria and Guidelines – Vertical Drop Structures

5.5.2.1 Minimum Height: The minimum height for vertical drop structure must be 10 feet relative to the high design flow elevation in the *tailrace*.

5.5.2.2 Cantilever: If the potential for leaping injury exists, flow must pass over two feet or more of cantilevered ledge provided over the leaping pool.

5.5.2.3 Minimum Flow Depth: Provision must be made to ensure that fish jumping at the vertical drop structure flow will land in a minimum five foot deep pool, without contacting any solid surface.

5.6 Horizontal Draft Tube Diffusers

5.6.1 Description and Purpose – Horizontal Draft Tube Diffusers

A horizontal draft tube *diffuser* is a device used below a powerhouse at the turbine draft tube outlet to prevent fish from accessing the turbine runners, where injury may occur during start up or shut down of turbine operations, or possibly during normal operations if draft tube velocity is low (generally less than 16 ft/s). If the draft tubes are located in proximity of an upstream passage system, a horizontal draft tube *diffuser* system may be the appropriate choice for an exclusion system.

5.6.2 Specific Criteria and Guidelines – Horizontal Draft Tube Diffusers

5.6.2.1 Flow: Average velocity of flow exiting the horizontal *diffuser* grating must be less than 1.25 ft/s, and distributed as uniformly as possible. Maximum velocity should not exceed 2 ft/s.

5.6.2.2 Bar Spacing: Clear spacing between *diffuser* bars and any other pathway from the *tailrace* to the turbine runner must be less than 1 inch.

5.6.2.3 Placement: *Diffuser*s must be submerged a minimum of 2 feet for all *tailwater* elevations.

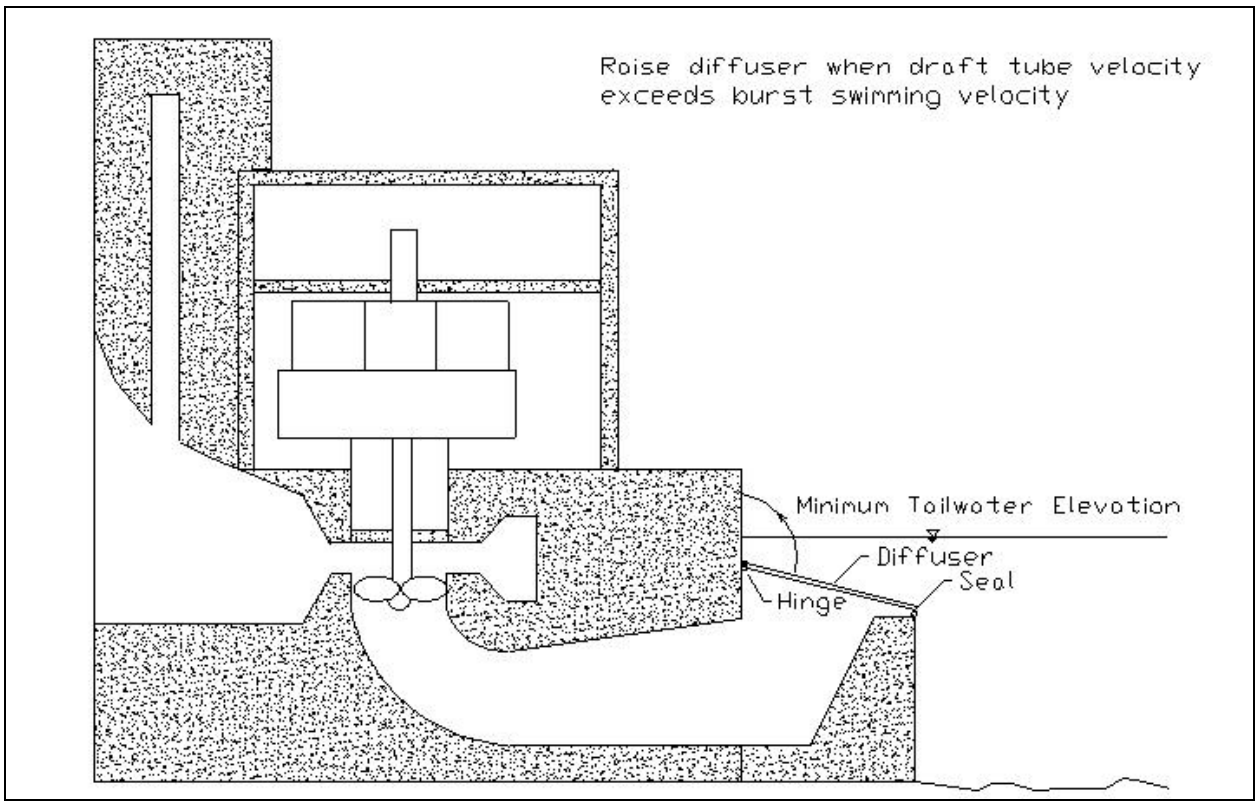

Figure 5-2. Potential Layout of a Horizontal Draft Tube Diffuser

6. ADULT FISH TRAPPING SYSTEMS

6.1 Introduction – Adult Fish Trapping Systems

In general, NMFS requires *volitional passage*, as opposed to trap and haul, for upstream passage facilities. This is primarily due to the risks associated with the handling and transport of adult upstream migrants, in combination with the long term uncertainty of funding, maintenance, and operation of the trap and haul program. Furthermore, trap and haul programs tend to not operate at the beginning and end of migration periods because there are only a few individuals present. This practice truncates the tails of the migration and likely has adverse affects on salmon population diversity. In contrast, a facility that provides for *volitional passage* can operate 24/7, year-round. Nevertheless, there are instances where trap and haul may be the only viable option for a particular site. In particular, at high head dams where thermal stratification occurs in the reservoir, temperature differentials in the *fishway* (as opposed to water temperatures below the dam) may dissuade fish from utilizing *volitional passage* facilities. In any case, NMFS' primary objective in prescribing or requiring the construction and operation of a fish passage facility is to maintain or restore the viability of anadromous fish populations.

This section addresses design aspects of adult fish trapping systems. The operations and design criteria and guidelines are dependent on each other, since the management objectives for trap operation define the facility *functional design* and must be stipulated before the trap design development can proceed.

In many cases, NMFS may not require retrofit of existing facilities to comply with criteria listed herein. It is emphasized that these criteria and guidelines are viewed as a starting point for design development of new, or upgraded, trapping facilities. This section does not directly apply to existing trapping programs/facilities, unless specifically required by NMFS.

Adult fish trapping systems may either be included in the initial design of a proposed *upstream passage facility*, or in some cases may be retro-fitted to an existing *fishway*. Traps should be designed to utilize known or observed fish behavior to benignly route fish into a trap holding pool that precludes volitional exit. From the trap holding pool, fish may be loaded for transport and/or examined for research and management purposes. Traps may be used as the terminus of volitional *upstream fish passage* followed by transport to specific sites, or as a parallel component of a *fish ladder* where fish may either be routed into an adjacent trapping loop or if the trap is closed, allow unimpeded fish passage through the *fishway*.

Criteria are specific standards for fishway design, maintenance, or operation that cannot be changed without a written waiver from NMFS. For the purposes of this document, a criterion is preceded by the word "must." In general, a specific criterion can not be changed unless there is site-specific biological rationale for doing so. An example of biological rationale that could lead to criterion waiver is a determination or confirmation by NMFS biologists that the smallest fry-sized fish will likely not be present at a

proposed screen site. Therefore, the juvenile fish screen approach velocity criterion of 0.4 ft/s could be increased to match the smallest life stage expected at the screen site. A guideline is a range of values or a specific value for fishway design, maintenance or operation that may change when site-specific conditions are factored into the conceptual fishway design. For the purposes of this document guidelines are preceded by the word "should." Guidelines should be followed in the fishway design until site-specific information indicates that a different value would provide better fish passage conditions or solve site-specific issues. An example of site-specific rationale that could lead to a modified guideline is when the maximum river depth at a site is 3 feet, as compared to the design guideline for a fishway entrance depth of 6 feet. In this example, safe and timely fish passage could be provided by modifying the guideline to match the depth in the river. It is the responsibility of the applicant to provide compelling evidence in support of any proposed waiver of criteria or modification of a guideline for NMFS approval early in the design process, well in advance of a proposed Federal action. After a decision to provide passage at a particular site has been made, the following design criteria and guidelines are applicable, in addition to those described throughout Section 3.

6.2 Trap Design Scoping

- New trap construction or major upgrade proposals must address and describe the consideration of (at least) the following issues:
- Objective of trapping - count, handle, collect, interrogate for tags, etc.
- Number of fish targeted and total number potentially present
- Target species, included ESA-listed species
- Other species likely to be present at the trap, including ESA-listed species
- Environmental conditions during trap operation such as water and air temperature, flow conditions (lows and peaks), debris load, etc.
- Operation location, duration and scale
- Fish routing and ultimate destination
- Maximum duration of delay or holding within the trapping system for target and non-target fish
- Security mechanisms
- If a Hatchery and Genetic Management Plan (HGMP), 4(d) Limit 7 Scientific Research and Take Authorization application, or Section 10(a)(1)(A) permit application exists, and use these as the basis for design of a trap site. Most trap sites will require at least one of these documents.

6.3 Fish Handling

6.3.1 Specific Criteria and Guidelines – Fish Handling

6.3.1.1 Nets: Use of nets to capture or move fish must be minimized or eliminated. If nets are used they should be sanctuary type nets, with solid bottoms to allow minimal dewatering of fish. Fish must be handled with extreme care.

6.3.1.2 Anesthetization: In most cases, fish should be anesthetized before being handled. The method of anesthetization for ESA-listed anadromous salmonids may be specified by the appropriate ESA permit, which must be received prior to any directed take of listed species. In the design process and prior to permit submittal, the type of anesthetic can be selected by agreement by NMFS staff involved in trap design.

6.3.1.3 Non-Target Fish: New or upgraded trapping facilities must be designed to enable non-target fish to bypass the anesthetic tank.

6.3.1.4 Frequency: Fish must be removed from traps at least daily. When either environmental (e.g., water temperature extremes, low dissolved oxygen or high debris load) or biological conditions (e.g., migration peaks) warrant, fish must be removed more frequently to preclude crowding or adverse water quality (see Section 6.5.1.2 and 6.5.1.3).

6.3.1.5 Personnel: Individuals handling fish must be experienced or trained to ensure fish are handled safely.

6.3.1.6 Fish Ladders: *Fish ladder*s must not be completely dewatered during trapping operations, and should not experience any reduction in *fishway* flow.

6.4 General Trap Design

6.4.1 Specific Criteria and Guidelines – General Trap Design

6.4.1.1 Primary Trapping System: Primary trapping system components usually include:

- in-ladder removable diffusers or gates to block passage within the ladder and guide fish into the trap;
- an off-ladder holding pool including a transition channel or port and trapping mechanism (through which *attraction flow* is discharged via one of the devices described in Section 6.6);
- a gate to prevent fish from entering the trap area during crowding operations;
- a holding pool fish *crowder* (for encouraging adult egress from the off-ladder holding pool to sorting/loading facilities);
- separate holding pool inflow and outflow facilities;
- *distribution flume* (used with *false weir* or steeppass to enable fish entry to and/or egress from the holding pool); and
- a lock or lift for truck-loading fish.

6.4.1.2 Fish Ladders: *Fish ladder*s are the preferred means of upstream passage at impediments, unless site conditions preclude their use. This is due to the preference that fish be allowed to pass at their inclination, rather than that of a human operator. Factors to be considered include the adverse effects of holding

trapped fish in a potentially high-density holding pool for an excessive period, the long-term uncertainty of maintaining funding and trained personnel, exposure to poaching or predation in the trap, injuries from jumping, facility failures (e.g., loss of water supply), and cumulative handling and holding stresses.

6.4.1.3 Location: In general, *fish ladder*s should not be designed or retrofitted with either in-ladder traps or loading facilities. Rather, trap/holding and loading facilities should be in an adjacent, off-ladder location where fish targeted for trapping purposes may be routed. This allows operational flexibility to readily switch from passage to trapping operational modes.

6.4.1.4 Distribution Flume: A *distribution flume* must be used when fish are routed to anesthetic tanks, recovery tanks, pre-transport holding tanks, fish ladders or project *forebays*. The flume must have smooth joints, sides, and bottom with no abrupt vertical or horizontal bends and have continuously wetted surfaces. Horizontal and vertical radius of curvature should be at least 5 times flume width to minimize risk of fish strike injuries. The minimum inside width (or diameter) of the *distribution flume* must be 15 inches, and the minimum sidewall height in the *distribution flume* must be 24 inches.

6.4.1.5 Water Quality: Holding pool water quality should equal or exceed that of the ambient waters from which fish are trapped. The water temperature, oxygen content, and pH must provide fish with a safe, healthy environment.

6.4.1.6 Inflow: Trap inflow must be routed through an upstream *diffuser* conforming with Section 4.3.2, with maximum 1.0 ft/s average velocity. Baffling or other energy dissipation means should be used to prevent excessive turbulence and surging, which may induce adult jumping within the trap.

6.4.1.7 Recovery Pool: Anesthetized fish must be routed to a recovery pool to allow monitoring of fish to ensure full recovery from the anesthetic effect prior to release. Fish recovering from anesthesia must not be routed directly back to the river where unobserved mortality may occur. Recovery pool inflow must satisfy the specified water quality guidelines (see Sections 6.4.1.5, 6.5.1.2, and 6.5.1.4). Recovery tank hydraulic conditions must not result in partially or fully anesthetized fish being impinged on an outflow grating or any other hazardous area. A release pool must allow fully recovered fish to volitionally exit.

6.5 Trap Holding Pool

6.5.1 Specific Guidelines and Criteria – Trap Holding Pool

For single-pool traps, refer to Section 6.9. For trap holding pools at multi-pool ladders, criteria and guidelines include:

6.5.1.1 Off-Ladder Trap System: For new or existing *fish ladder*s, fish must not be trapped and held within the ladder for intermittent sampling or truck-loading. Rather, an *off- ladder trap* system is required. This type of system allows unimpeded ladder passage during non-trapping periods, and intermittent trapping of fish for required collection or sampling. The intent is to minimize adverse impacts (such as delay and elevated jumping injury/mortality) of fish trapping by allowing rapid transition from one operational mode to the other.

6.5.1.2 Capacity, Temperature, and Dissolved Oxygen: Trap holding pools (for short term holding in *off ladder trap*s and for trap and haul facilities) must be sized to provide a minimum volume of 0.25 ft^3 per pound of fish based on trap capacity, with water temperatures less than 50° F, dissolved oxygen between 6 to 7 parts per million, and fish held less than 24 hours (Senn 1984). The trap capacity is determined by the maximum daily fish return, or by the number of fish expected to be trapped before the trap catch is transported. The poundage of fish is determined by the weight of an average fish targeted for trapping, times the maximum number of fish. Note that the poundage calculation may entail a number of different fish species. For long term holding at off ladder holding pools, (greater than 72 hours), trap holding pool water volumes should be increased by a factor of three. If water temperatures are greater than 50° F, the poundage of fish held should be reduced by 5% for each degree over 50° F. The trap capacity and average weight of targeted fish to be used in design are subject to approval by a NMFS. Also, see Section 6.3.1.4.

6.5.1.3 Water Supply and Quality: Trap holding pools (for short-term holding in *off ladder trap*s and for trap and haul facilities) must be designed with a separate water supply and drain system. Trap holding pool design water supply capacity must be at least 0.67 gallons per minute per adult fish for the predetermined adult salmon trap holding capacity, with water temperatures less than 50° F, dissolved oxygen between 6 to 7 ppm, and fish held less than 24 hours. For long term holding, (greater than 72 hours), trap holding pool flow rates should be increased by a factor of three (Senn 1984). Also, see Section 6.3.1.4.

6.5.1.4 Minimization of Adult Jumping: Trap holding pool designs must include provisions to minimize adult jumping which may result in injury or mortality. Examples include (but are not limited to): high *freeboard* on holding pool walls (5 feet or more); covering to keep fish in a darkened environment; providing netting over the pool strong enough to prevent adults from breaking through the mesh fabric; or, provision of sprinklers above the holding pool water surface to reduce the ability of fish to detect movement above the trap pool.

6.5.1.5 Pickets:

- Off-ladder holding pools should include intake and exit *pickets* designed to prevent adult egress and to conform with Section 4.3.2, and with an adjustable exit overflow *weir* located upstream of the exit *picket* to control holding pool water surface elevation.
- Removable *pickets* within the ladder (installed to block fish ascent within the ladder when fish are to be routed into an *off-ladder trap*ping pool) must be angled toward the *off ladder trap* entrance location, and must comply with Section 4.3.2. *Pickets* must be completely removed from the ladder when not actively trapping.

6.5.1.6 Crowders: Holding pool *crowder*s should have a maximum clear bar spacing of $^{7}/_{8}$ inch. Side gap tolerances must not exceed 1 inch, with side and bottom seals sufficient to allow *crowder* movement without binding, and to prevent fish movement behind the *crowder* panel.

6.5.1.7 Distribution Flume: Where *false weir*s and steeppass ladders are used to route fish into or out of a trap holding pool, *distribution flume*s or pipes are used as described in Section 6.4.1.4.

6.6 Trapping Mechanism

6.6.1 Description and Purpose – Trapping Mechanism

The trap holding pool trapping mechanism (e.g., *finger weir*, vee-trap, *false weir*, steeppass ladder) allows fish to enter, but not volitionally exit, the holding pool.

6.6.2 Specific Criteria and Guidelines – Trapping Mechanism

6.6.2.1 Design (General):

- All components exposed to fish must have all welds and sharp edges ground smooth to the touch, with other features as required to minimize injuries.
- Bars and spacings must conform to Section 4.3.2.
- Trapping mechanisms must allow temporary closure to avoid spatial conflict with *brail* crowding and loading operations.
- Trapping mechanisms should be designed to safeguard against fish entry into an unsafe area such as behind a *crowder* or under floor *brail*.
- A gravity (i.e., not pumped) water supply should be used for *false-weirs* and steeppass ladders to avoid potential rejection of the trapping mechanism associated with the transmission of pump/motor sounds.

6.7 Lift/Hopper

6.7.1 Description and Purpose – Lift/Hopper

A lift in this context includes a full-sized *hopper* that is capable of collecting/lifting all fish trapped in a holding pool at one time, then either routing fish to the *forebay*, or loading onto a truck for transport.

6.7.2 Specific Criteria and Guidelines – Lift/Hopper

6.7.2.1 Maximum Water Volume: Maximum *hopper* and transport truck loading water volumes should be greater than or equal to 0.15 ft^3 per pound of fish at the maximum fish loading density, to provide *hopper* or transport operations with sufficient volume of water for fish safety.

6.7.2.2 *Hopper freeboard*, from *hopper* water surface to top of *hopper* bucket, should be greater than the water depth within the *hopper*, to reduce risk of fish jumping out during lifting operations.

6.7.2.3 Sump: When a trap design includes a *hopper* sump (into which the *hopper* is lowered during trapping), side clearances between the *hopper* and sump sidewalls should not exceed 1 inch, thereby minimizing fish access below the *hopper*. Flexible side seals must be used to ensure that fish do not pass below the *hopper*.

6.7.2.4 Transport Tanks:

- Truck transport tanks must be compatible with the *hopper* design to minimize handling stress. If an existing vehicle will be used, the *hopper* must be designed to be compatible with existing equipment. If the transport tank's opening is larger than the tube or *hopper* opening, a cap or other device must be designed to prevent fish from jumping at the opening.
- Design should allow *hopper* water surface control to be transferred to the truck transport tank so that water and fish do not plunge abruptly from the *hopper* into the fish transport tank during loading.

6.7.2.5 Fish Egress Opening: The fish egress opening from the *hopper* into the transport tank must have a minimum horizontal cross-sectional area of 3 ft^2, and must have a smooth transition that minimizes the potential for fish injury.

6.7.2.6 Design (General):

- Fail-safe measures must be provided to prevent entry of fish into the holding pool area to be occupied by the *hopper* before the *hopper* is lowered into position.
- The *hopper* interior must be smooth, and be designed to safeguard fish.

6.8 Fish Lock

6.8.1 Description and Purpose – Fish Lock

A *fish lock* allows trapped fish in the trapping system holding pool to be elevated without a *hopper* or *hopper* sump.

The following steps describe the routing of fish from the lock to the *forebay* or transport vehicle:

1. Fish are crowded into the lock.
2. The closure gate is shut.
3. Flow into the lock is introduced through floor *diffuser*s below the floor *brail*.
4. As the water level rises within the lock, it will ultimately reach a control *weir* equilibrium elevation. The floor *brail* should be raised only after the lock water surface elevation is at equilibrium, and should not be used to lift fish out of the water.
5. Overflow passes over a control *weir* and through a dewatering screen, allowing excess flow to be drained off and adult fish to be routed directly into the anesthetic tank, or into a wetted flume for routing to separate sorting/holding pools, or to be loaded into a transport vehicle.

6.8.2 Specific Criteria and Guidelines – Fish Lock

6.8.2.1 Lock Inflow Chamber: The lock inflow chamber (below the lowest floor *brail* level) must be of sufficient depth and volume (see Section 4.5.3.5) to limit turbulence into the fish holding zone when lock inflow is introduced. The inflow sump should be designed so that flow upwells uniformly through add-in floor *diffuser*s (see Section 4.3.2), thereby limiting unstable hydraulic conditions within the lock that may agitate fish.

6.8.2.2 Depth Over Fish Egress Weir: Depth over the *fish egress weir* should be at least 6 inches, to facilitate fish egress from the lock for transport or handling.

6.8.3.2 Floor Brail:

- Floor *brail* should be composed of sufficiently sized *screen material* (based on life stage and species present), to preclude injury or mortality of non-target species. Side gap openings must not exceed 1 inch with seals included to cover all gaps. The floor *brail* panel should be kept in its lowest position until flow passes over the *flow egress weir*.
- The floor *brail* hoist should be designed for manual operation to allow movement of the *brail* at 2 feet/minute (upward and downward) that will minimize stress of fish crowded between the floor *brail* and lock *flow egress weir*. Automated operation is allowed only when the water depth above the *brail* is 4 feet or more.

6.9 Single Holding Pool Traps

6.9.1 Description and Purpose – Single Holding Pool Traps

Single pool traps are often used in tandem with intermittent *exclusion barriers* (see Section 5) for brood-stock collection from small streams. These trapping systems are used to collect, sort, and load adult fish.

6.9.2 Specific Criteria and Guidelines – Single Holding Pool Traps

6.9.2.1 Design (General):

- The trap holding pool water volume must be designed according to Section 4.5.3.5 to achieve relatively stable interior hydraulic conditions and minimize jumping of trapped fish.
- Intakes must conform to Section 4.3.3.
- Sidewall *freeboard* should be a minimum 4 feet above trap pool water surface at high design streamflow.
- The trap holding pool interior surfaces must be smooth to reduce the potential for fish injury.

6.9.2.2 Fish Removal Procedure: A description of the proposed means of removing fish from the trapping pool and loading onto a transport truck must be submitted to NMFS for approval in the ESA incidental take permit application.

7. CULVERTS AND OTHER STREAM CROSSINGS

7.1 Introduction – Culverts and Other Stream Crossings

This section provides criteria and guidelines for the design of stream crossings to aid upstream and downstream movement of anadromous salmonids. For the purpose of fish passage, the distinction between bridge, culvert, and low water crossing is not as important as the effect the structure has on the form and function of the stream. To this end, these criteria conceptually apply to bridges and low water crossings, as well as to culverts. In addition to providing fish passage, any road crossing design should include consideration for maintaining the ecological function of the stream - passing woody debris, flood flows and sediment, and other species that may be present at the site. The objective of these criteria and guidelines is to provide the basis for road crossing fish passage designs for all life stages of anadromous salmonids present at the site requiring passage. The design team should be in close contact with all biologists familiar with the site to assess potential impacts on spawning, life stages requiring passage, and to assess bed stability.

Criteria are specific standards for fishway design, maintenance, or operation that cannot be changed without a written waiver from NMFS. For the purposes of this document, a criterion is preceded by the word "must." In general, a specific criterion can not be changed unless there is site-specific biological rationale for doing so. An example of biological rationale that could lead to criterion waiver is a determination or confirmation by NMFS biologists that the smallest fry-sized fish will likely not be present at a proposed screen site. Therefore, the juvenile fish screen approach velocity criterion of 0.4 ft/s could be increased to match the smallest life stage expected at the screen site. A guideline is a range of values or a specific value for fishway design, maintenance or operation that may change when site-specific conditions are factored into the conceptual fishway design. For the purposes of this document guidelines are preceded by the word "should." Guidelines should be followed in the fishway design until site-specific information indicates that a different value would provide better fish passage conditions or solve site-specific issues. An example of site-specific rationale that could lead to a modified guideline is when the maximum river depth at a site is 3 feet, as compared to the design guideline for a fishway entrance depth of 6 feet. In this example, safe and timely fish passage could be provided by modifying the guideline to match the depth in the river. It is the responsibility of the applicant to provide compelling evidence in support of any proposed waiver of criteria or modification of a guideline for NMFS approval early in the design process, well in advance of a proposed Federal action. After a decision to provide passage at a particular site has been made, the following design criteria and guidelines are applicable, in addition to those described throughout Section 3.

7.2 Preferred Alternatives for New, Replacement, or Retrofitted Stream Crossings

All the alternatives listed below have the potential to pass fish, but some may perform better than others at a particular site. Based on the biological significance and ecological risk of a particular site, NMFS may require a specific design alternative to be developed, if feasible, to allow normative physical processes within the stream-*floodplain* corridor by (1) promoting natural sediment transport patterns for the reach, (2) providing unaltered fluvial debris movement, and (3) restoring or maintaining functional longitudinal continuity and connectivity of the stream-*floodplain* system.

The following alternatives and structure types are listed in general order of NMFS' preference:

- Road abandonment and reclamation or road realignment to avoid crossing the stream.
- Bridge or stream simulation spanning the stream flood plain, providing long-term dynamic channel stability, retention of existing spawning areas, maintenance of food (benthic invertebrate) production, and minimized risk of failure. If a stream crossing is proposed in a segment of stream channel that includes a salmonid spawning area, only full-span stream simulation designs (see Section 7.4) are acceptable.
- Embedded pipe culvert, bottomless arch designs or non-floodplain spanning stream simulation (see Sections 7.3 and 7.4).
- Hydraulic design method, associated with more traditional culvert design approaches - limited to low stream gradients (0% to 1%) or for retrofits (Section 7.5).
- Culvert designed with an external *fishway* (including roughened channels) for steeper slopes (see Section 4).
- Baffled culvert or internal weirs - to be used only for when other alternatives are infeasible (see Section 7.6). Many *baffle* designs are untested for anadromous salmonid passage, and *baffles* always reduce the hydraulic capacity of culverts. NMFS may only approve *baffled* culverts on a site by site basis if compelling evidence of successful passage at other sites utilizing a similar design is provided and a suitable monitoring and maintenance plan is developed and followed.

7.3 Embedded Pipe Design Method

7.3.1 Description and Purpose – Embedded Pipe Method

This method provides a simplified design methodology that is intended to provide a culvert of sufficient size and embedment to allow the natural movement of *bedload* and the formation of a stable bed inside the culvert, and is intended for use only in very small streams. Determination of the high and low fish passage design flows, water velocity, and water depth is not required for this method, since the stream hydraulic characteristics within the culvert are intended to mimic the stream conditions upstream and downstream of the crossing. This design method is usually not suitable for stream channels that are

greater than 3% in natural slope or for culvert lengths greater than 80 feet. Structures for this design method are typically round, oval, or squashed pipes made of metal or reinforced concrete.

7.3.2 Specific Criteria and Guidelines – Embedded Pipe Design Method

7.3.2.1 Culvert Width: The minimum culvert bed width must be greater than the *bankfull* channel width. Vertical clearance from bed to ceiling must be at least 4 feet to allow for maintenance activities. There are many cases where greater widths may be required, based on the objective of providing a stable structure that will allow ecological function to continue.

7.3.2.2 Culvert Slope: The culvert must be placed level (0% slope).

7.3.2.3 Embedment: The bottom of the culvert should be buried into the streambed not less than 20% of the culvert height at the outlet and not more than 40% of the culvert height at the inlet. The slope of the bed must replicate the natural upstream and downstream stream gradient in the vicinity of the road crossing.

7.3.2.4 Fill Materials: Fill materials should be comprised of material to maximize the probability that fill materials will remain in place for all flows or be replaced as deposition occurs as streamflow recedes. The design must demonstrate the ability (by choosing fill material using size analysis of streambed material in the adjacent stream reaches if stream hydraulics are replacated, or by using guidance provided in WDFW 2003) to maintain the engineered streambed in the design configuration over the life of the project.

7.3.2.5 Water Depth: Water depth and velocity in the culvert must replicate the natural stream depth and water velocity upstream and downstream of the road crossing.

7.4 Streambed Simulation Design Method

7.4.1 Description and Purpose – Streambed Simulation Design Method

This method is a design process that is intended to mimic the natural upstream and downstream processes within a culvert or under a bridge. Fish passage, sediment transport, and debris conveyance within the culvert are designed to function as they would in a natural channel. Determination of the high and low fish passage design flows, design water velocity, and design water depth is not required for this option since the stream hydraulic characteristics within the culvert or beneath the bridge are designed to mimic the stream conditions upstream and downstream of the road crossing. The structures for this design method are typically open-bottomed arches or boxes but could have buried floors in some cases, or a variety of bridges that span the stream channel. This method utilizes streambed materials that are similar to the adjacent stream channel.

Streambed simulation requires a greater level of information on hydrology and geomorphology (topography of the stream channel) and a higher level of engineering expertise than the Embedded Pipe Design method (see Section 7.3). In general, streambed simulation should provide sufficient channel complexity to provide passage conditions similar to that which exists in the adjacent natural stream, including sufficient depth, velocity and resting areas.

7.4.2 Specific Criteria and Guidelines – Streambed Simulation Design Method

7.4.2.1 Channel Width: The minimum culvert bed width must be greater than *bankfull* channel width, and of sufficient vertical clearance to allow ease of maintenance activities. There are many cases where greater widths may be required, based on the objective of providing a stable structure that will allow ecological function to continue. For example, if a channel is not fully entrenched, some allowance for overbank flow may need to be provided. Similarly, for braided or meandering channels or other unconfined channel shapes, the flood plain must be allowed to function as a flow conveyance. If a stream is not fully entrenched, the minimum culvert bed width should be at least 1.3 times the *bankfull* channel width.

7.4.2.2 Channel Vertical Clearance: The minimum vertical clearance between the culvert bed and ceiling should be more than 6 feet, to allow access for debris removal. Smaller vertical clearances may be used if a sufficient inspection and maintenance plan is provided with the design that ensures that the culvert will be free of debris during the passage season.

7.4.2.3 Channel Slope: The slope of the reconstructed streambed within the culvert should approximate the average slope of the adjacent stream from approximately ten channel widths upstream and downstream of the site in which it is being placed, or in a stream reach that represents natural conditions outside the zone of the road crossing influence. For purposes of maintaining streambed integrity within the road crossing, the maximum slope of streambed simulation where closed bottom culverts are used should not exceed 6%. Design detail and/or a long term maintenance plan should be included that reflects how the streambed within the culvert will be maintained in its design condition over time.

7.4.2.4 Embedment: If a culvert is used, the bottom of the culvert should be buried into the streambed not less than 30% and not more than 50% of the culvert height, and a minimum of 3 feet. For bottomless culverts the footings or foundation must be designed for the largest anticipated scour depth. The ability (using size analysis of streambed material in the adjacent stream reaches, or by using guidance provided in WDFW 2003) to maintain the engineered streambed in the design configuration over the life of the project must be demonstrated by the design.

7.4.2.5 Maximum Length of Road Crossing: The length for streambed simulation should be less than 150 feet. If the length is greater than 150 feet, a bridge should be considered.

7.4.2.6 Fill Materials: Fill materials should be comprised of materials of similar size composition to natural bed materials that form the natural stream channels adjacent to the road crossing. The design must demonstrate long term stability of the passage corridor, through assessment of hydraulic conditions through the passage corridor over the fish passage design flow range, and through assessment of the ability of the stream to deliver sufficient transported bed material to maintain the integrity of the streambed over time. Larger material may be used to assist in grade retention and to provide resting areas for migratory fish.

7.4.2.7 Water Depth and Velocity: Water depth and velocity must closely resemble those that exist in the adjacent stream, as described in Section 7.4.2.3, or those listed in Section 7.5.2.6. To provide resting zones, special care should be used to provide areas of greater than average depth and lower than average velocity throughout the length of the streambed simulation, reasonably replicating those found in the adjacent stream. Hydraulic controls to maintain depth at low flows may be required.

7.5 Hydraulic Design Method

7.5.1 Design and Purpose – Hydraulic Design Method

The hydraulic design method is a design process that matches the hydraulic performance of a culvert with the swimming abilities of a target species and age class of fish. It is only suitable in streams with sufficiently low gradient to provide the hydraulic conditions found in Table 8.5. This method targets distinct species of fish and therefore does not account for ecosystem requirements of non-target species. There are significant errors associated with estimation of hydrology and fish swimming speeds that are resolved by making conservative assumptions in the design process. Determination of the high and low fish passage design flows, water velocity, and water depth is required for this option. The hydraulic design method requires hydrologic data analysis, open channel flow hydraulic calculations, and information on the swimming ability and behavior of the target group of fish. This design method may be applied to the design of new and replacement culverts and may be used to evaluate the effectiveness of retrofits of existing culverts.

7.5.2 Specific Criteria and Guidelines – Hydraulic Design Method

7.5.2.1 Culvert Width and Vertical Clearance: The minimum culvert width and vertical clearance between the culvert bed and ceiling should be more than 6 feet, to allow access for debris removal. Smaller vertical clearances may be used if a sufficient inspection and maintenance plan is provided with the design that ensures that the culvert will be free of debris during the passage season.

7.5.2.2 Culvert Slope: The slope of the reconstructed streambed within the culvert should not exceed 125% of the approximate average slope of the adjacent stream from approximately 10 channel widths upstream and downstream of the site in which it is being placed, or in a stream reach that represents natural conditions outside the zone of the road crossing influence. If embedment of the culvert is not possible, the maximum slope should not exceed 0.5%.

7.5.2.3 Embedment: Where physically possible, the bottom of the culvert should be buried into the streambed a minimum of 20% of the height of the culvert below the elevation of the *tailwater* control point downstream of the culvert, and the minimum embedment must be at least 1 foot.

7.5.2.4 Fish Passage Design Velocity: The fish passage design high flow (see Section 3.3) for adult fish passage is used to determine the maximum water velocity within the culvert.

7.5.2.5 Fish Passage Design Depth: The fish passage design low flow (see Section 3.2) for fish passage is used to determine the minimum depth of water within a culvert. Hydraulic controls may be required to maintain depth at low flows.

7.5.2.6 Average Water Velocity: The maximum average water velocity in the culvert refers to the calculated average of velocity within the barrel of the culvert at the fish passage design high flow. In most instances, upstream juvenile fish passage requirements should also be considered in design. Juvenile fish passage analysis should include calculating average water velocity for the 50% exceedence flow for the time period corresponding to juvenile upstream passage. Use Table 7-1 to determine the maximum average water velocity allowed.

Table 7-1. Maximum Allowable Average Culvert Velocity

Culvert Length (ft)	Maximum Average Velocity (ft/s)		
	Chinook, Steelhead, Sockeye, and Coho Adults	Pink and Chum Adults	Juvenile Salmonids
<60	6.0	5.0	1.0
60-100	5.0	4.0	1.0
100-200	4.0	3.0	1.0
200-300	3.0	2.0	1.0
>300	2.0	2.0	1.0

7.5.2.7 Minimum Water Depth: Minimum water depth at the low fish passage design flow should be: 1.0 feet for adult steelhead, Chinook, coho, and sockeye salmon; 0.75 feet for pink and chum salmon; and 0.5 feet for all species of juvenile salmon, as measured in the centerline of the culvert. The minimum depth within the culvert barrel is calculated at fish passage design low flow.

7.5.2.8 Maximum Hydraulic Drop: *Hydraulic drop*s between the water surface in the culvert and the water surface in the adjacent channel should be avoided in all cases. This includes the culvert inlet and outlet. Where physical conditions preclude embedment and the streambed is stable (e.g., culvert installation on bedrock) the *hydraulic drop* at the outlet of a culvert must not exceed the limits specified in Table 10-1 if juvenile fish are present and require upstream passage, or 1 foot if juvenile fish are not present or do not require upstream passage.

7.6 Retrofitting Culverts

7.6.1 Description and Purpose – Retrofitting Culverts

For future planning and budgeting at the state and local government levels, redesign and replacement of substandard stream crossings may contribute substantially to the recovery of salmon stocks throughout the state, if better access to underutilized habitat is provided. Many existing stream crossings can be improved for fish passage by cost-effective means. The decision to replace or improve a crossing should fully consider actions that will result in the greatest net benefit for fish passage. If a particular stream crossing causes substantial fish passage problems that hinder the conservation and recovery of salmon in a watershed, complete redesign and replacement is warranted. The extent of the needed fish passage improvement work depends on the severity of fisheries impacts, the remaining life of the structure, and the status of salmonid stocks in a particular stream or watershed.

For work at any stream crossing, site constraints need to be taken into consideration when selecting options. Some typical site constraints are ease of structure maintenance, construction windows, site access, equipment, and material needs and availability. Consolidation and/or decommissioning of roads and reclamation and restoration of the roadbed can sometimes be the most cost effective option. Consultations with NMFS biologists can aid in selecting priorities and alternatives.

7.6.2 Specific Criteria and Guidelines – Retrofitting Culverts

Where existing culverts are being modified or retrofitted to improve fish passage, the hydraulic requirements specified in Section 7.5 should be the design objective for the improvements. However, it is acknowledged that the conditions that cause an existing culvert to impair fish passage may also limit the remedies for fish passage improvement. Therefore, short of culvert replacement, the Section 7.5 criteria and guidelines should be the goal for improvement but not necessarily the required design threshold. Fish passage through existing non-embedded culverts may be improved through the use of gradient

control *weir*s downstream of the culvert, interior *baffles* or *weir*s, or, in some cases, *fish ladder*s. However, these measures are not a substitute for good fish passage design for new or replacement culverts. The following guidelines should be used:

7.6.2.1 Hydraulic Controls: Hydraulic controls in the channel upstream and/or downstream of a culvert may be used to provide a continuous low flow path through the culvert and stream reach. They may be used to facilitate fish passage by accomplishing adequate depth and water velocity within the culvert, to concentrate low flows, to provide resting pools upstream and downstream of the culvert, and to prevent erosion of bed and banks.

7.6.2.2 Approach Pool: An approach pool should be provided that is at least 1.5 times the stream depth, or a minimum of 2 feet deep, which ever is deeper.

7.6.2.3 Baffles: *Baffles* may provide incremental fish passage improvement in culverts (if the culvert has excess hydraulic capacity) that cannot be made passable by other means. However, *baffles* may increase the potential for clogging and debris accumulation within the culvert and require special design considerations specific to the *baffle* type. Culverts that are too long or too high in gradient require resting pools, or other forms of velocity refuge spaced at increments along the culvert length. *Baffle* installations must only be installed after approval by NMFS engineers on a site-specific basis, and generally only for interim use until a permanent passage solution is employed. A suitable inspection and maintenance plan must be provided (i.e., inspected prior to each passage season and after any flood event greater than a 2-year exceedence flow, with subsequent debris removal as needed). The *baffle* design configuration must demonstrate that it can provide successful fish passage over the range of fish passage design flows. If an inspection and maintenance plan is implemented and successful, and good fish passage is documented, *baffles* may be approved for permanent installation.

7.6.2.4 Fishways (see Section 4 and Section 10): *Fishway*s may be required for some situations where excessive drops occur at the culvert outlet, or for some steep stream gradient situations, or to maintain channel integrity if an undersized culvert has been removed. *Fishway*s require specialized site-specific design for each installation and as such, a NMFS fish passage specialist must be contacted prior to ESA consultation.

7.7 Miscellaneous Culverts/Road Crossings

7.7.1 Specific Criteria and Guidelines – Miscellaneous Culverts/Road Crossings

7.7.1.1 Trash Racks: *Trash racks* should not be used near the culvert inlet. Accumulated debris may lead to severely restricted fish passage and potential injuries to fish. Where *trash racks* cannot be avoided in culvert installations, they must only be installed above the water surface indicated by *bankfull* flow. A minimum of 9 inches clear spacing should be provided between *trashrack* vertical members. If *trash racks* are used, a long term maintenance plan must be provided along with the design, to allow for timely clearing of debris.

7.7.1.2 Livestock Fences: Livestock fences should not be used across the culvert inlet. Accumulated debris may lead to severely restricted fish passage and potential injuries to fish. Where fencing cannot be avoided, it should be removed during adult salmon upstream migration periods. Otherwise, a minimum of 9 inches clear spacing should be provided between *pickets*, up to the high flow water surface. If fencing is used, a long term maintenance plan must be provided along with the design, to allow for timely clearing of debris. Cattle fences that rise with increasing flow are highly recommended.

7.7.1.3 Lighting: Natural or artificial supplemental lighting should be considered in new or replacement culverts that are over 150 feet in length. Where supplemental lighting is required, the spacing between light sources should not exceed 75 feet. Available research results indicate that different species of anadromous salmonids respond differently to lighting conditions (COE 1976), and NMFS engineering staff should be specifically contacted if a culvert greater than 150 feet in length is under consideration.

7.7.1.4 In-Stream Work Windows: NMFS and State Fish and Wildlife officials commonly set instream work windows in each watershed. Work in the active stream channel must not be performed outside of the instream work windows.

7.7.1.5 Temporary Crossings: Temporary crossings, placed in salmonid streams for water diversion during construction activities, must meet all of the guidelines in this document. However, if it can be shown that the location of a temporary crossing in the stream network is not a fish passage concern at the time of the project, then the construction activity only needs to minimize erosion, sediment delivery, and impact to surrounding riparian vegetation.

7.7.1.6 Installation: Culverts must be installed only in a dewatered site, with a sediment control and flow routing plan acceptable to NMFS.

7.7.1.7 Riparian Restoration: The work area must be fully restored upon completion of construction with a mix of native, locally adapted, riparian vegetation. Use of species that grow extensive root networks quickly should be emphasized. Sterile, non-native hybrids may be used for erosion control in the short term if planted in conjunction with native species.

7.7.1.8 Construction Disturbances: Construction disturbance to the riparian area must be minimized and the activity must not adversely impact fish migration or spawning.

7.7.1.9 Presence of Salmonids: If salmonid are likely to be present, salvage operations must be conducted by qualified personnel prior to construction. If these salmonids are listed as threatened or endangered under the ESA, consult directly with NMFS biologists to acquire an ESA take permit to gain authorization for these activities. Care should be taken to ensure salmonids are not chased under banks or logs that will be removed or dislocated by construction. Any stranded salmonids are to be returned to a suitable location in a nearby live stream, and as specified in the ESA take permit, if applicable.

7.7.1.10 Pumps: If pumps are used to temporarily divert a stream (to facilitate construction), an acceptable fish screen (see Section 11) must be used to prevent entrainment or impingement of small fish. At no time must construction or construction staging activity disrupt continuous streamflow downstream of the construction site.

7.7.1.11 Wastewater: Unacceptable wastewater associated with project activities must be disposed of off-site in a location that will not drain directly into any stream channel.

7.7.1.12 Flood Capacity: Regardless of the design option used, to minimize the risk of the environmental consequences of structural failure, all road crossings must be designed to withstand the 100-year peak flood flow, including consideration of debris loading likely to be encountered during flooding. Stream crossings or culverts located in areas where there is significant risk of inlet plugging by flood-borne debris should be designed to pass the 100-year peak flood without exceeding the top of the culvert inlet (headwater-to-diameter ratio is less than one). This is to ensure a low risk of channel degradation, stream diversion, and failure over the life span of the crossing. Hydraulic capacity must compensate for expected deposition in the culvert bottom.

7.7.1.13 Other Hydraulic Considerations: Besides the upper and lower flow limit, other hydraulic effects need to be considered, particularly when installing a culvert. Water surface elevations in the stream reach must exhibit gradual flow transitions, both upstream and downstream of the road crossing.

Within the culvert, abrupt changes in water surface and velocity, hydraulic jumps, turbulence, and drawdown at the upstream flow entrance must be avoided in design. A continuous low flow channel must be maintained during construction throughout the entire stream reach affected by the road crossing construction. In addition, especially in retrofits, hydraulic controls may be necessary to provide resting pools, concentrate low flows, prevent erosion of stream bed or banks, and allow passage of *bedload* material. Hydraulic control devices may be required to avoid headcutting. Culverts and other structures should be aligned with the stream, with no abrupt changes in flow direction upstream or downstream of the crossing. This can often be accommodated by changes in road alignment or slight elongation or enlargement of the culvert. Where elongation would be excessive, this must be weighed against better crossing alignment and/or modified transition sections upstream and downstream of the crossing. In crossings that are unusually long compared to streambed width, natural sinuosity of the stream will be lost and sediment transport problems may occur even if the slopes remain constant. Such problems should be anticipated and mitigated in the project design.

8. TIDE GATES (WORK IN PROGRESS)

Design standards for fish passage through tide gates are in the developmental stage. If you are interested in the current status, please call Larry Swenson at 503-230-5448.

9. COLUMBIA AND SNAKE RIVER FISH PASSAGE FACILITIES

9.1 Introduction – Columbia and Snake River Fish Passage Facilities

The following criteria and guidelines are specially adapted to Columbia and Snake River upstream and downstream fish passage facilities. The guidelines and criteria in this section apply at mainstem hydroelectric projects. This section is intended as a starting point for future fish passage facilities designs, and is based on experience at COE mainstem hydroelectric dams on the Lower Columbia and Snake Rivers.

Criteria are specific standards for fishway design, maintenance, or operation that cannot be changed without a written waiver from NMFS. For the purposes of this document, a criterion is preceded by the word "must." In general, a specific criterion can not be changed unless there is site-specific biological rationale for doing so. An example of biological rationale that could lead to criterion waiver is a determination or confirmation by NMFS biologists that the smallest fry-sized fish will likely not be present at a proposed screen site. Therefore, the juvenile fish screen approach velocity criterion of 0.4 ft/s could be increased to match the smallest life stage expected at the screen site. A guideline is a range of values or a specific value for fishway design, maintenance or operation that may change when site-specific conditions are factored into the conceptual fishway design. For the purposes of this document guidelines are preceded by the word "should." Guidelines should be followed in the fishway design until site-specific information indicates that a different value would provide better fish passage conditions or solve site-specific issues. An example of site-specific rationale that could lead to a modified guideline is when the maximum river depth at a site is 3 feet, as compared to the design guideline for a fishway entrance depth of 6 feet. In this example, safe and timely fish passage could be provided by modifying the guideline to match the depth in the river. It is the responsibility of the applicant to provide compelling evidence in support of any proposed waiver of criteria or modification of a guideline for NMFS approval early in the design process, well in advance of a proposed Federal action.

9.2 Mainstem Upstream Passage

9.2.1 Description and Purpose – Mainstem Upstream Passage

Each mainstem *fish ladder* system is designed with a specific number (and location) of primary entrances (typically at each shore, and at the powerhouse/spillway interface), a defined hydraulic capacity, and specific operations of auxiliary water, entrance, and exit facilities. For a number of reasons, ladder entrance operations may evolve and not be consistent with that envisioned in the design phase. Ladder entrances are perhaps the most important feature of the adult *fish ladder* system. If entrances are improperly located or designed, excessive *upstream fish passage* delay may occur. While this document primarily focuses on design criteria and guidelines, operations of fish passage facilities are a vital and overlapping link. The criteria and guidelines in this sub-section are intended to reinforce what NMFS believes are appropriate ladder entrance operations.

9.2.2 Specific Criteria and Guidelines – Mainstem Upstream Passage

9.2.2.1 Attraction Flows: Total *attraction flow* discharged from adult *fishway* entrances should be either a minimum of 3% of mean annual river flow, or the *attraction flow* approved in the original design memorandum phase prior to construction. Total ladder *attraction flow* and entrance location are important design parameters to assure safe, efficient, and timely upstream passage.

Unless approved by NMFS, adult ladder total entrance *attraction flow* (gravity ladder flow from *forebay*, plus auxiliary water flow) must not be reduced from original design levels.

9.2.2.2 Ladder Entrances: Unless specifically stated in the original design, all ladder entrances must be designed to be operated continuously during *fish passage season* in accordance with ladder entrance *attraction flow* criteria listed below.

9.2.2.3 Auxiliary Water Systems: *Auxiliary water system*s must include sufficient back-up hydraulic capacity to ensure continued operation consistent with design criteria.

9.2.2.4 Ladder Entrance Attraction Flow Criteria: Adjustable *weir* gate crest elevations at primary entrances must be submerged at a minimum depth of 8 feet (relative to *tailwater* water surface elevation), with a head differential of 1.0 to 2.0 feet. These two parameters have evolved to become the standard for determining whether mainstem hydro project *fish ladder* entrances are discharging at, or above, the minimum satisfactory ladder *attraction flow*. However, if this criteria cannot be satisfied at one or more ladder entrances (as is the case at some mainstem hydro projects), an hydraulic investigation should be initiated to determine whether some entrances are discharging excessive *attraction flow*, while others fail to satisfy minimum *attraction flow* criteria. In these cases, it should be determined whether different ladder entrance combinations of head differential and *weir* submergence can be implemented to provide the minimum equivalent *attraction flow* (e.g., provided by 8-foot *weir* submergence and 1 foot of entrance head) at each ladder entrance. For instance, if the *weir* depth at one entrance is reduced by 25% and the differential is increased to remain within criterion listed above, the equivalent *attraction flow* can still be provided. Analysis findings should be coordinated with all parties before implementation.

All other ladder design and operational features must comply with Section 4.

9.3 Mainstem Juvenile Screen and Bypass

9.3.1 Description and Purpose – Mainstem Juvenile Screen and Bypass

Turbine intake screens and *vertical barrier screen*s at mainstem Columbia and Snake River hydroelectric dams are an exception to design criteria for conventional screens referenced in Section 11. *Turbine intake screens* are considered partial screens, because they do not screen the entire turbine discharge. They are high-velocity screens, meaning approach velocities are much higher than allowed for conventional screens. *Turbine intake screens* were retrofitted at many mainstem Columbia and Snake River powerhouses (which cannot be feasibly screened using conventional screen criteria) to protect fish from turbine entrainment to the extent possible.

9.3.2 Specific Criteria and Guidelines – Mainstem Juvenile Screen and Bypass

Dewatering screen systems must adhere to the criteria and guidelines provided in Section 11. The following turbine intake screen and *vertical barrier screen* design criteria are the product of extensive research and development:

9.3.2.1 Turbine Intake Screens :

- Dimensions/Orientation: Existing intake screens are either 20 or 40 feet long and are located in the bulkhead slot of each turbine. They are lowered into the intake, and then rotated to the correct operating inclination.
- Materials: The turbine intake screen face must be stainless steel bar screen, with maximum clearance between bars equal to1.75 mm.
- Cleaning: The turbine intake screen must have an approved and proven screen cleaning device, which may be adjusted for desired cleaning frequency.
- *Porosity*: Turbine intake screen *porosity* must be determined on the basis of physical hydraulic modeling

9.3.2.2 Maximum Approach Velocity: Maximum approach velocity (normal to the screen face) for *turbine intake screens* must be 2.75 ft/s. Above this velocity threshold, injury rates increase.

9.3.2.3 Stagnation Point: The stagnation point (point where the component of velocity along the turbine intake screen face is 0 ft/s) must be at a location where the submerged screen intercepts between 40% to 43% of turbine intake flow, and must be within 5 feet of the leading edge of the screen.

9.3.2.5 Gatewell Flow: Gatewell flow must be approximately 10% of intercept flow (which is flow above the intake screen stagnation point), and approximately 4% of turbine flow.

9.4 Vertical Barrier Screens

9.4.1 Description and Purpose – Vertical Barrier Screens

Vertical barrier screens (VBS) pass nearly all flow entering the gatewell from the intake screen and intake ceiling apex zone. Fish pass upward along the VBS, then accumulate in the upper gatewell, near an orifice that is designed to pass them safely into the juvenile *bypass system*.

9.4.2 Specific Criteria and Guidelines – Vertical Barrier Screens

9.4.2.1 Velocity Distribution:

- Hydraulic modeling must be used to ensure the greatest possible uniform velocity distribution across the entire VBS. Note that this criterion assumes that operating gate position has a significant influence over VBS velocity flow distribution, and is one of the design issues to be reconciled through use of the physical model.
- Variable-*porosity* stacked panels must be developed through physical hydraulic modeling, to achieve uniform velocity distribution and minimize turbulence in the upper gatewell.

9.4.2.2 Materials and Orientation: Where gatewell flow is increased by a flow vane at the gatewell entrance, VBS should be constructed of stainless steel bar screens with bars oriented horizontally, and a maximum clearance between bars of 1.75 mm.

9.4.2.3 Cleaning/Debris Removal: A screen cleaner and debris removal system must be features of each VBS with a gatewell flow increaser vane. Horizontal orientation of the screen bars facilitates debris removal.

9.4.2.4 Through-Screen Velocity: Average VBS through-screen velocity must be a maximum of 1.0 ft/s, unless field testing is conducted to prove sufficiently low fish descaling/injury rates at a specific site.

10. UPSTREAM JUVENILE FISH PASSAGE

10.1 Introduction – Upstream Juvenile Fish Passage

Upstream juvenile fish passage is necessary at some passage sites, where inadequate conditions exist downstream for rearing fish. In a ladder that uses only a portion of the river flow for *upstream fish passage*, juvenile passage may require special and separate provisions from those designed to optimize adult passage. However, adult fish passage should never be compromised to accommodate juvenile passage.

Criteria are specific standards for fishway design, maintenance, or operation that cannot be changed without a written waiver from NMFS. For the purposes of this document, a criterion is preceded by the word "must." In general, a specific criterion can not be changed unless there is site-specific biological rationale for doing so. An example of biological rationale that could lead to criterion waiver is a determination or confirmation by NMFS biologists that the smallest fry-sized fish will likely not be present at a proposed screen site. Therefore, the juvenile fish screen approach velocity criterion of 0.4 ft/s could be increased to match the smallest life stage expected at the screen site. A guideline is a range of values or a specific value for fishway design, maintenance or operation that may change when site-specific conditions are factored into the conceptual fishway design. For the purposes of this document guidelines are preceded by the word "should." Guidelines should be followed in the fishway design until site-specific information indicates that a different value would provide better fish passage conditions or solve site-specific issues. An example of site-specific rationale that could lead to a modified guideline is when the maximum river depth at a site is 3 feet, as compared to the design guideline for a fishway entrance depth of 6 feet. In this example, safe and timely fish passage could be provided by modifying the guideline to match the depth in the river. It is the responsibility of the applicant to provide compelling evidence in support of any proposed waiver of criteria or modification of a guideline for NMFS approval early in the design process, well in advance of a proposed Federal action. After a decision to provide passage at a particular site has been made, the following design criteria and guidelines are applicable, in addition to those described throughout Section 3.

10.2 Design – Upstream Juvenile Fish Passage

As discussed in Section 4.2, it is recommended that a 1.0 to 1.5 foot *hydraulic drop* from entrance pool to *tailwater* is used for *fishway* entrance design. Attraction of adult salmonids to a *fishway* entrance is compromised with decreased head drop at a *fishway* entrance, unless all of the streamflow is passed through the entrance. *Fishway* attraction (i.e., fishes' ability to locate the *fishway* entrance downstream of the dam) is the critical design parameter for an *upstream passage facility*. Previously, many of the *fishway* entrances on the Columbia River operated with 0.5 foot of *hydraulic drop* (measured from the entrance pool water surface to *tailwater* surface). After extensive laboratory and field studies, it was conclusively determined that higher velocities, which directly relate to the amount of *hydraulic drop* through the entrance, provide better attraction of adult salmonids than did lower velocities. This determination resulted in making hydraulic

adjustments to *fishway* entrances so that they operated with 1.0 to 1.5 feet of *hydraulic drop*, instead of 0.5 feet. Subsequent radio telemetry studies verified that passage times decreased as a result. Thus, there is a clear basis for designing entrance pool to *tailwater* differentials between 1.0 to 1.5 feet for adult salmonid passage.

Within the Northwest Region of NMFS (which includes the states of Washington, Oregon, and Idaho), there are varying requirements for juvenile passage. NMFS will consider the appropriate design requirements as applicable. Lower required *hydraulic drop* between pools is not going to provide an obstacle to adult fish, provided that the facility satisfies entrance design requirements of Section 4.2. When juvenile fish passage is required, the *fishway* must be designed to operate with a maximum 0.5 feet of *hydraulic drop*, and should meet the guidelines listed in Table 10-1. However, the *fishway* entrance must operate per the guidelines and criteria listed in Section 4.4 when adult salmonids are present.

10.2.1 General Criteria and Guidelines – Upstream Juvenile Passage

Given the reported swimming speeds for juvenile coho salmon and observed leaping capabilities, submerged ports or pipes should be avoided when designing passage facilities for juvenile fish, except for inlet and outlet conditions. *Fishway*s should be designed as pool and chute or roughened channel, with drops not to exceed the criteria listed in Table 10.1. In addition to the *hydraulic drop*, calm water in the pools and a low velocity just upstream of the *weir* crest is important. *Weir*s should be designed as sharp crested, where the head over the *weir* is two times the breadth.

Table 10-1. Juvenile Upstream Fish Passage Guidelines

Upstream Juvenile Fish Passage Guidelines			
Fish Size (mm)	Maximum hydraulic drop over fishway weir (ft)	Maximum hydraulic drop at fishway entrance and exit (ft)	Velocity for swimming distances less than 1 foot, (ft/s)
45 to 65	0.7	0.13	1.5 to 2.5
80 to 100	1	0.33	3 to 4.5

Powers (1993) indicated that pool volume criteria such as described in Section 4.5.3.5 are critical to ensuring appropriate passage conditions. The pool volume criteria described in Section 4.5.3.5 defines a maximum turbulence threshold based on energy dissipation within the volume of a fishway pool. If this threshold is exceeded, a turbulent barrier to adult fish may be created. For optimal juvenile fish passage, this pool volume should be doubled.

Hydraulic design for juvenile upstream passage should be based on representative flows in which juveniles typically migrate. Recent research indicates that providing for juvenile salmon passage up to the 10% annual exceedence flow may cover the majority of flows in which juveniles have been observed moving upstream.

In some situations, it may be feasible to operate a ladder entrance with a decreased *hydraulic drop* at times when adult salmon are not present and at 1 to 1.5 feet during the adult salmon upstream migration. The feasibility of doing this often entails making a judgment call on the timing of adult passage when often little or no information is available, and if it is available, it may change from year to year. In other situations, it may be appropriate to provide multiple *fishway* entrances that operate independently, according to the desired *hydraulic drop*. One entrance may operate to attract adult fish and convey the appropriate volume shape of attraction jet and velocities and another entrance may operate at a lower differential and convey flow over a *weir*.

11. FISH SCREEN AND BYPASS FACILITIES

11.1 Introduction – Fish Screen and Bypass Facilities

This section provides criteria and guidelines to be used in the development of designs of downstream migrant fish screen facilities for hydroelectric, irrigation, and other water withdrawal projects. The design guidance provided in this section applies to *fishway* designs after a decision to provide a passage facility has been made. Unless directly specified herein, this guidance is not intended for use in evaluation of existing facilities, nor does it provide guidance on the application of the design for any particular site. Sections 1, 2, 3, and the Foreword of this document also apply to the guidelines and criteria listed in this section.

In designing an effective fish screen facility, the swimming ability of the fish is a primary consideration. Research has shown that swimming ability of fish varies and may depend upon a number of factors relating to the physiology of the fish, including species, size, duration of swimming time required, behavioral aspects, migrational stage, physical condition and others, in addition to water quality parameters such as dissolved oxygen concentrations, water temperature, lighting conditions, and others. For this reason, screen criteria must be expressed in general terms.

Several categories of screen designs are in use but are still considered as experimental technology by NMFS. These include Eicher screens, modular inclined screens, coanda screens, and horizontal screens. The process to evaluate experimental technology is described in Section 16. Several of these experimental screen types have completed part or all of the experimental technology process, and may be used in specific instances when site conditions allow. Design of these screens, or new conceptual types of experimental screens, may be developed through discussions with NMFS engineers on a case-by-case basis.

Criteria are specific standards for fishway design, maintenance, or operation that cannot be changed without a written waiver from NMFS. For the purposes of this document, a criterion is preceded by the word “must.” In general, a specific criterion can not be changed unless there is site-specific biological rationale for doing so. An example of biological rationale that could lead to criterion waiver is a determination or confirmation by NMFS biologists that the smallest fry-sized fish will likely not be present at a proposed screen site. Therefore, the juvenile fish screen approach velocity criterion of 0.4 ft/s could be increased to match the smallest life stage expected at the screen site. A guideline is a range of values or a specific value for fishway design, maintenance or operation that may change when site-specific conditions are factored into the conceptual fishway design. For the purposes of this document guidelines are preceded by the word “should.” Guidelines should be followed in the fishway design until site-specific information indicates that a different value would provide better fish passage conditions or solve site-specific issues. An example of site-specific rationale that could lead to a modified guideline is when the maximum river depth at a site is 3 feet, as compared to the design guideline for a fishway entrance depth of 6 feet. In this example, safe and

timely fish passage could be provided by modifying the guideline to match the depth in the river. It is the responsibility of the applicant to provide compelling evidence in support of any proposed waiver of criteria or modification of a guideline for NMFS approval early in the design process, well in advance of a proposed Federal action. After a decision to provide passage at a particular site has been made, the following design criteria and guidelines are applicable, in addition to those described throughout Section 3.

11.2 Functional Screen Design

A *functional screen design* should be developed that defines type, location, size, hydraulic capacity, method of operation, and other pertinent juvenile fish screen facility characteristics. In the case of applications to be submitted to FERC and for consultations under the ESA, a *functional design* for juvenile (and adult) fish passage facilities must be developed and submitted as part of the FERC License Application or as part of the Biological Assessment for the facility. It must reflect NMFS input and design criteria and be acceptable to NMFS. *Functional design* drawings must show all pertinent hydraulic information, including water surface elevations and flows through various areas of the structures. *Functional design* drawings must show general structural sizes, cross-sectional shapes, and elevations. Types of materials must be identified where they may directly affect fish. The final detailed design must be based on the *functional design*, unless changes are agreed to by NMFS.

11.3 Site Conditions

To minimize risks to anadromous fish at some locations, NMFS may require investigation (by the project sponsors) of important and poorly defined site-specific variables that are deemed critical to development of the screen and bypass design. This investigation may include factors such as fish behavioral response to hydraulic conditions, weather conditions (ice, wind, flooding, etc.), river stage/flow relationships, seasonal operational variability, potential for sediment and debris problems, resident fish populations, potential for creating predation opportunity, and other information. The life stage and size of juvenile salmonids present at a potential screen site usually is not known, and may change from year to year based on flow and temperature conditions. Thus, adequate data to describe the size-time relationship requires substantial sampling efforts over a number of years. For the purpose of designing juvenile fish screens, NMFS will assume that *fry*-sized salmonids and low water temperatures are present at all sites and apply the appropriate criteria listed below, unless adequate biological investigation proves otherwise. The burden-of-proof is the responsibility of the owner of the diversion facility.

11.4 Existing Screens

11.4.1 Acceptance Criteria and Guidelines for Existing Screens

If a fish screen was constructed prior the establishment of these criteria, but constructed to NMFS criteria established August 21, 1989, or later, approval of these screens may be considered providing that all six of the following conditions are met:

11.4.1.1 The entire screen facility must function as designed.

11.4.1.2 The entire screen facility has been maintained and is in good working condition.

11.4.1.3 When the *screen material* wears out, it must be replaced with *screen material* meeting the current criterion stated in this document. To comply with this condition, structural modifications may be required to retrofit an existing facility with new *screen material.*

11.4.1.4 No mortality, injury, entrainment, impingement, migrational delay, or other harm to anadromous fish has been noted that is being caused by the facility;

11.4.1.5 No emergent *fry* are likely to be located in the vicinity of the screen, as agreed to by NMFS biologists familiar with the site.

11.4.1.6 When biological uncertainty exists, access to the diversion site by NMFS is permitted by the diverter for verification of the above criteria.

11.5 Structure Placement

11.5.1 Specific Criteria and Guidelines – Structure Placement: Streams and Rivers

11.5.1.1 Instream Installation: Where physically practical and biologically desirable, the screen should be constructed at the point of diversion with the screen face generally parallel to river flow. However, physical factors may preclude screen construction at the diversion entrance. Among these factors are excess river gradient, potential for damage by large debris, access for maintenance, operation and repair, and potential for heavy sedimentation. For screens constructed at the bankline, the screen face must be aligned with the adjacent bankline and the bankline must be shaped to smoothly match the face of the screen structure to minimize turbulence and eddying in front, upstream, and downstream of the screen. Adverse alterations to riverine habitat must be minimized.

11.5.1.2 Canal Installation: Where installation of fish screens at the diversion entrance is not desirable or impractical, the screens may be installed in the canal downstream of the entrance at a suitable location. All screens installed downstream from the diversion entrance must be provided with an effective *bypass system*, as described in Sections 11.9 through 11.12, designed to collect and transport fish safely back to the river with minimum delay. The screen location must be chosen to minimize the effects of the diversion on instream flows by placing the bypass outfall as close as biologically feasible (i.e., considering minimizing length and optimizing the hydraulics of the bypass pipe) and practically feasible to the point of diversion.

11.5.1.3 Functionality: All screen facilities must be designed to function properly through the full range of stream hydraulic conditions as defined in Section 3 and in the diversion conveyance, and must account for debris and sedimentation conditions which may occur.

11.5.2 Specific Criteria and Guidelines – Structure Placement: Lakes, Reservoirs, and Tidal Areas

11.5.2.1 Intake Locations: Intakes must be located offshore where feasible to minimize fish contact with the facility. When possible, intakes must be located in areas with sufficient ambient velocity to minimize sediment accumulation in or around the screen and to facilitate debris removal and fish movement away from the screen face. Intakes in reservoirs should be as deep as practical, to reduce the numbers of juvenile salmonids that encounter the intake.

11.5.2.2 Surface Outlets: If a reservoir outlet is used to pass fish from a reservoir, the intake must be designed to withdraw water from the most appropriate elevation based on providing the best juvenile fish attraction and appropriate water temperature control downstream of the project. The entire range of *forebay* fluctuation must be accommodated in design. Since surface outlet designs must consider a wide spectrum of site-specific hydraulic and fish behavioral conditions, NMFS engineers and biologists must be involved in developing an acceptable conceptual design for any surface outlet fish passage system before the design proceeds.

11.6 Screen Hydraulics – Rotating Drum Screens, Vertical Screens, and Inclined Screens

11.6.1 Specific Criteria and Guidelines – Screen Hydraulics

11.6.1.1 Approach Velocity: The *approach velocity* must not exceed 0.40 ft/s for *active screens*, or 0.20 ft/s for *passive screens*. Using these approach velocities will minimize screen contact and/or impingement of juvenile fish. For screen design, *approach velocity* is calculated by dividing the maximum screened

flow amount by the vertical projection of the *effective screen area*. An exception may be made to this definition of *approach velocity* for screen where a clear egress route minimizes the potential for impingement. If this exception is approved be NMFS, the *approach velocity* is calculated using the entire *effective screen area*, and not a vertical projection. For measurement of approach velocity, see Section 15.2.

11.6.1.2 Effective Screen Area: The minimum *effective screen area* must be calculated by dividing the maximum screened flow by the allowable *approach velocity*.

11.6.1.3 Submergence: For rotating drum screens, the design submergence must not exceed 85%, nor be less than 65% of drum diameter. Submergence over 85% of the screen diameter increases the possibility of entrainment over the top of the screen (if entirely submerged), and increases the chance for impingement with subsequent entrainment if fish are caught in the narrow wedge of water above the 85% submergence mark. Submerging rotating drum screens less than 65% may reduce the self-cleaning capability of the screen. In many cases, stop logs may be installed downstream of the screens to achieve proper submergence. If stop logs are used, they should be located at least two drum diameters downstream of the back of the drum.

11.6.1.4 Flow Distribution: The screen design must provide for nearly uniform flow distribution (see Section 15.2) over the screen surface, thereby minimizing *approach velocity* over the entire screen face. The screen designer must show how uniform flow distribution is to be achieved. Providing adjustable *porosity* control on the downstream side of screens, and/or flow *training wall*s may be required. Large facilities may require hydraulic modeling to identify and correct areas of concern. Uniform flow distribution avoids localized areas of high velocity, which have the potential to impinge fish.

11.6.1.5 Screens Longer Than Six Feet:

- Screens longer than 6 feet must be angled and must have *sweeping velocity* greater than the *approach velocity*. This angle may be dictated by site-specific geometry, hydraulic, and sediment conditions. Optimally, *sweeping velocity* should be at least 0.8 ft/s and less than 3 ft/s.
- For screens longer than 6 feet, *sweeping velocity* must not decrease along the length of the screen.

11.6.1.6 Inclined Screen Face: An inclined screen face must be oriented less than 45° vertically with the screen length (upstream to downstream) oriented parallel to flow, unless the inclined screen is placed in line with riverbank and reasonably matching the slope of the riverbank.

11.6.1.7 Horizontal Screens: Horizontal screens have been evaluated as an experimental technology, and may only be considered if the majority of flow

passes over the end of the screen at a minimum depth of 1 foot, and positive downstream *sweeping velocity* in excess of the approach velocity exists for the entire length of screen. Post construction monitoring of the facility must occur. Since site-specific design conditions are required, NMFS engineers must be consulted throughout the development and evaluation of the design.

11.7 Screen Material

11.7.1 Specific Criteria and Guidelines – Screen Material

11.7.1.1 Circular Screens: Circular screen face openings must not exceed $^{3}/_{32}$ inch in diameter. Perforated plate must be smooth to the touch with openings punched through in the direction of approaching flow.

11.7.1.2 Slotted Screens: Slotted screen face openings must not exceed 1.75 mm (approximately $^{1}/_{16}$ inch) in the narrow direction.

11.7.1.3 Square Screens: Square screen face openings must not exceed $^{3}/_{32}$ inch on a diagonal.

11.7.1.4 Material: The *screen material* must be corrosion resistant and sufficiently durable to maintain a smooth uniform surface with long term use.

11.7.1.5 Other Components: Other components of the screen facility (such as seals) must not include gaps greater than the maximum screen opening defined above.

11.7.1.6 Open Area: The percent open area for any *screen material* must be at least 27%.

11.8 Civil Works and Structural Features

11.8.1 Specific Criteria and Guidelines – Civil Works and Structural Features

11.8.1.1 Placement of Screen Surfaces: The face of all screen surfaces must be placed flush (to the extent possible) with any adjacent screen bay, pier noses, and walls to allow fish unimpeded movement parallel to the screen face and ready access to bypass routes.

11.8.1.2 Structural Features: Structural features must be provided to protect the integrity of the fish screens from large debris, and to protect the facility from damage if overtopped by flood flows. A *trash rack*, log boom, sediment sluice, and other measures may be required.

11.8.1.3 Civil Works: The civil works must be designed in a manner that prevents undesirable hydraulic effects (such as eddies and stagnant flow zones) that may delay or injure fish or provide predator habitat or predator access.

11.9 Bypass Facilities

11.9.1 Specific Criteria and Guidelines – Bypass Layout

11.9.1.1 Bypass Location:

- The screen and bypass must work in tandem to move out-migrating salmonids (including downstream migrant adult salmonids such as steelhead *kelts*, if present) to the bypass outfall with a minimum of injury or delay.
- The bypass entrance must be located so that it may easily be located by out-migrants.
- The bypass entrance and all components of the *bypass system* must be of sufficient size and hydraulic capacity to minimize the potential for debris blockage.
- Screens greater than or equal to 6 feet in length must be constructed with the downstream end of the screen terminating at a bypass entrance. Screens less than or equal to 6 feet in length may be constructed perpendicular to flow with a bypass entrance at either or both ends of the screen, or may be constructed at an angle to flow, with the downstream end terminating at the bypass entrance.
- Some screen systems do not require a bypass system. For example, an end of pipe screen located in a river, lake, or reservoir does not require a bypass system because fish are not removed from their habitat. A second example is a river bank screen with sufficient hydraulic conditions to move fish past the screen face.

11.9.1.2 Multiple Entrances: Multiple bypass entrances should be used if the *sweeping velocity* may not move fish to the bypass within 60 seconds, assuming fish are transported along the length of the screen face at a rate equaling *sweeping velocity*.

11.9.1.3 Training Wall: A *training wall* must be located at an angle to the screen face, with the bypass entrance at the apex and downstream-most point. For many facilities, the wall of the civil works opposite to the screen face may serve as a *training wall*. For single or multiple *vee screen* configurations, *training wall*s are not required, unless an intermediate bypass must be used.

11.9.1.4 Secondary Screen: In cases where there is insufficient flow available to satisfy hydraulic requirements at the bypass entrance for the primary screens, a secondary screen may be required within the primary bypass. The secondary *bypass flow* conveys fish to the bypass outfall location or other destination, and returns secondary screened flow for water use.

11.9.1.5 Bypass Access: Access for inspection and debris removal must be provided at locations in the *bypass system* where debris accumulations may occur.

11.9.1.6 Trash Racks: If *trash racks* are used, sufficient hydraulic gradient must be provided to route juvenile fish from between the *trash rack* and screens to the bypass.

11.9.1.7 Canal Dewatering: The floor of the screen civil works must be designed to allow fish to be routed back to the river safely when the canal is dewatered. This may entail using a small gate and drain pipe, or similar provisions, to drain all flow and fish back to the river. If this cannot be accomplished, an acceptable fish salvage plan must be developed in consultation with NMFS and included in the operation and maintenance plan.

11.9.1.8 Bypass Channel Velocity: To ensure that fish move quickly through the bypass channel (i.e., the conveyance from the terminus of the screen to the bypass pipe), the rate of increase in velocity between any two points in the bypass channel should not decrease and should not exceed 0.2 ft/s per foot of travel.

11.9.1.9 Natural Channels: Natural channels may be used as a bypass upon approval by NMFS engineers. A consideration for utilizing natural channels as a bypass is the provision of off-stream habitat. Requirements for natural channels include adequate depth and velocity, sufficient flow volume, protection from predation, and good water quality.

11.9.2 Specific Criteria and Guidelines – Bypass Entrance

11.9.2.1 Flow Control: Each bypass entrance must be provided with independent flow-control capability.

11.9.2.2. Minimum Velocity: The minimum bypass entrance flow velocity should be greater than 110% of the maximum canal velocity upstream of the bypass entrance. At no point must flow decelerate along the screen face or in the bypass channel. *Bypass flow* amounts should be of sufficient quantity to ensure these hydraulic conditions are achieved for all operations throughout the *smolt* out-migration period.

11.9.2.3 Lighting: Ambient lighting conditions must be included upstream of the bypass entrance and should extend to the *bypass flow* control device. Where lighting transitions cannot be avoided, they should be gradual, or should occur at a point in the *bypass system* where fish cannot escape the bypass and return to the canal (i.e., when bypass velocity exceeds swimming ability).

11.9.2.4 Dimensions: For diversions greater than 3 cfs, the bypass entrance must extend from the floor to the canal water surface, and should be a minimum of 18

inches wide. For diversions of 3 cfs or less, the bypass entrance must be a minimum of 12 inches wide. In any case, the bypass entrance must be sized to accommodate the entire range of *bypass flow*, utilizing the criteria and guidelines listed throughout Section 11.9.

11.9.2.5 Weirs: For diversions greater than 25 cfs, *weir*s used in *bypass system*s should maintain a *weir* depth of at least 1 foot throughout the *smolt* out-migration period.

11.9.3 Specific Criteria and Guidelines – Bypass Conduit and System Design

11.9.3.1 General: Bypass pipes and joints must have smooth surfaces to provide conditions that minimize turbulence, the risk of catching debris, and the potential for fish injury. Pipe joints may be subject to inspection and approval by NMFS prior to implementation of the bypass. Every effort should be made to minimize the length of the bypass pipe, while maintaining hydraulic criteria listed below.

11.9.3.2 Bypass Flow Transitions: Fish should not be pumped within the bypass system. Fish must not be allowed to free-fall within a pipe or other enclosed conduit in a bypass system. Downwells must be designed with a free water surface, and designed for safe and timely fish passage by proper consideration of turbulence, geometry, and alignment.

11.9.3.3 Flows and Pressure: In general, *bypass flow*s in any type of conveyance structure should be open channel. If required by site conditions, pressures in the bypass pipe must be equal to or above atmospheric pressures. Pressurized to non-pressurized (or vice-versa) transitions should be avoided within the pipe. Bypass pipes must be designed to allow trapped air to escape.

11.9.3.4 Bends: Bends should be avoided in the layout of bypass pipes due to the potential for debris clogging and turbulence. The ratio of bypass pipe center-line radius of curvature to pipe diameter (R/D) must be greater than or equal to 5. Greater R/D may be required for super-critical velocities (see Section 11.9.3.8).

11.9.3.5 Access: Bypass pipes or open channels must be designed to minimize debris clogging and sediment deposition and to facilitate inspection and cleaning as necessary. Long bypass designs (eg. greater than 150 feet) may include access ports provided at appropriate spacing to allow for detection and removal of debris. Alternate means of providing for bypass pipe inspection and debris removal may be acceptable as well.

11.9.3.6 Diameter/Geometry: The bypass pipe diameter or open channel bypass geometry should generally be a function of the *bypass flow* and slope, and should be chosen based on achieving the velocity and depth criteria in Sections 11.9.3.8 and 11.9.3.9.

Table 11-1 provides examples for selecting the diameter of a bypass pipe based on diverted flow amount, assuming 1) bypass pipe slope of 1.3%; 2) Manning's roughness of 0.009; and 3) other bypass pipe criteria (Section 11.9) are met. Bypass pipe hydraulics should be calculated for a given design to determine a suitable pipe diameter if the design deviates from the assumptions used to calculate pipe diameters in Table 11-1.

Table 11-1. Bypass Design Examples

Diverted Flow (cfs)	***Bypass flow* (cfs)**	**Bypass Pipe Diameter (in)**	***Bypass flow* Depth (in)**
< 6	5% of diverted flow	10	2 ½
6 - 25	5% of diverted flow	10	4
40	2.00	12	4 ¾
75	3.75	15	6
125	6.25	18	7 ¼
175	8.75	21	8 ½
250	12.5	24	9 ½
500	25.0	30	12
750	37.5	36	14
> 1000	design with direct NMFS engineering involvement		

11.9.3.7 Flow: Design *bypass flow* should be about 5% of the total diverted flow amount, unless otherwise approved by NMFS. Regardless of the *bypass flow* amount, hydraulic guidelines and criteria in Sections 11.9.3.8 and 11.9.3.9 apply.

11.9.3.8 Velocity: The design bypass pipe velocity should be between 6 and 12 ft/s for the entire operational range. If higher velocities are approved, special attention to pipe and joint smoothness must be demonstrated by the design. To reduce silt and sand accumulation in the bypass pipe, pipe velocity must not be less than 2 ft/s.

11.9.3.9 Depth: The design minimum depth of free surface flow in a bypass pipe should be at least 40% of the bypass pipe diameter, unless otherwise approved by NMFS.

11.9.3.10 Closure Valves: Closure valves of any type should not be used within the bypass pipe unless specifically approved based on demonstrated fish safety.

11.9.3.11 Sampling Facilities: Sampling facilities installed in the bypass conduit must not in any way impair operation of the facility during non-sampling operations.

11.9.3.12 Hydraulic Jump: There should not be a hydraulic jump within the pipe.

11.9.3.13 Spillways: Spillways upstream of the screen facility also act as a *bypass system*. These facilities should also be designed to provide a safe passage route back to the stream, adhering to the bypass design principles described throughout Section 11.9

11.9.4 Specific Criteria and Guidelines – Bypass Outfall

11.9.4.1 Location:

- Bypass outfalls must be located to minimize predation by selecting an outfall location free of eddies, reverse flow, or known predator habitat. The point of impact for bypass outfalls should be located where ambient river velocities are greater than 4.0 ft/s during the *smolt* out-migration. Predator control systems may be required in areas with high avian predation potential. Bypass outfalls should be located to provide good egress conditions for downstream migrants.
- Bypass outfalls must be located where the receiving water is of sufficient depth (depending on the impact velocity and quantity of *bypass flow*) to ensure that fish injuries are avoided at all river and *bypass flow*s. The *bypass flow* must not impact the river bottom or other physical features at any stage of river flow.

11.9.4.2 Impact Velocity: Maximum bypass outfall impact velocity (i.e., the velocity of *bypass flow* entering the river) including vertical and horizontal velocity components should be less than 25.0 ft/s.

11.9.4.3 Discharge and Attraction of Adult Fish: The bypass outfall discharge into the receiving water must be designed to avoid attraction of adult fish thereby reducing the potential for jumping injuries and false attraction. The bypass outfall design must allow for the potential attraction of adult fish, by provision of a safe landing zone if attraction to the outfall flow can potentially occur.

11.10 Debris Management

11.10.1 Specific Criteria and Guidelines – Debris Management

11.10.1.1 Inspection and Maintenance: A reliable, ongoing inspection, preventative maintenance, and repair program is necessary to ensure facilities are kept free of debris and that screen media, seals, drive units, and other components are functioning correctly during the outmigration period. A written plan should be completed and submitted for approval with the screen design.

11.10.1.2 Screen Cleaning (Active Screens): *Active screens* must be automatically cleaned to prevent accumulation of debris. The screen cleaner design should allow for complete debris removal at least every 5 minutes, and operated as required to prevent accumulation of debris. The head differential to trigger screen cleaning for intermittent type cleaning systems must be a maximum

of 0.1 feet over clean screen conditions or as agreed to by NMFS. A variable timing interval trigger must also be used for intermittent type cleaning systems as the primary trigger for a cleaning cycle. The cleaning system and protocol must be effective, reliable, and satisfactory to NMFS.

11.10.1.3 Passive Screens: A *passive screen* should only be used when all of the following criteria are met:

- The site is not suitable for an *active screen*, due to adverse site conditions.
- Uniform approach velocity conditions must exist at the screen face, as demonstrated by laboratory analysis or field verification.
- The debris load must be low.
- The combined rate of flow at the diversion site must be less than 3 cfs.
- Sufficient ambient river velocity must exist to carry debris away from the screen face.
- A maintenance program must be approved by NMFS and implemented by the water user.
- The screen must be frequently inspected with debris accumulations removed, as site conditions dictate.
- Sufficient stream depth must exist at the screen site to provide for a water column of at least one screen radius around the screen face.
- The screen must be designed to allow easy removal for maintenance, and to protect from flooding.

11.10.1.4 Intakes: Intakes must include a *trash rack* in the screen facility design which must be kept free of debris. In certain cases, a satisfactory profile bar screen design may substitute for a *trash rack*. Based on biological requirements at the screen site, *trash rack* spacing may be specified that reduces the probability of entraining adult fish.

11.10.1.5 Inspection: The completed screen and bypass facility must be made available for inspection by NMFS, to verify that the screen is being operated consistent with the design criteria.

11.10.1.6 Evaluation: At some sites, screen and bypass facilities may be evaluated for biological effectiveness and to verify that hydraulic design objectives are achieved. At the discretion of NMFS, this may entail a complete biological evaluation especially if waivers to screen and bypass criteria are granted, or merely a visual inspection of the operation if screen and bypass criteria is met in total.

11.10.1.7 Sediment: Provision must be made to limit the build-up of sediment, where it may impact screen operations.

11.11 End of Pipe Screens (including pump intake screens)

11.11.1 Specific Criteria and Guidelines – End of Pipe Screens

11.11.1.1 Location: *End of pipe screens* must be placed in locations with sufficient ambient velocity to sweep away debris removed from the screen face, or designed in a manner to prevent debris re-impingement and provide for debris removal.

11.11.1.2 Submergence: *End of pipe screens* must be submerged to a depth of at least one screen radius below the minimum water surface, with a minimum of one screen radius clearance between screen surfaces and natural or constructed features. For *approach velocity* calculations, the entire submerged *effective screen area* may be used.

11.11.1.3 Escape Route: A clear escape route should exist for fish that approach the intake volitionally or otherwise. For example, if a pump intake is located off of the river (such as in an intake lagoon), a conventional open channel screen should be placed in the intake channel or at the edge of the river to prevent fish from entering a lagoon.

12. INFILTRATION GALLERIES (EXPERIMENTAL TECHNOLOGY)

12.1 Introduction – Infiltration Galleries

This section discusses the application and suitability for the installation of infiltration galleries. In concept, infiltration galleries may provide suitable fish passage conditions at a diversion site. However, if improperly sited, failure may occur that results in severe adverse habitat impacts and loss of habitat access in addition to the loss of the diversion. As such, any site proposed for an infiltration gallery must follow the experimental process described in Section 16. The following section describes the guidelines and criteria that should be followed in the planning, design, operation, monitoring, and maintenance of infiltration galleries.

The intent of these criteria is to build and operate infiltration galleries that provide at least the same level of fish protection as conventional screen facilities that meet NMFS screen criteria, as presented in Section 11. Accordingly, infiltration galleries have similar design criteria to conventional screens, such as: *screen* dimensions, *approach velocity*, bypass facilities, ability to monitor *head loss*, ability to be self-cleaning, ability to be maintained, and owner agreements to maintain and operate the system within criteria. These aspects are discussed in more detail in the following sections.

Criteria are specific standards for fishway design, maintenance, or operation that cannot be changed without a written waiver from NMFS. For the purposes of this document, a criterion is preceded by the word "must." In general, a specific criterion can not be changed unless there is site-specific biological rationale for doing so. An example of biological rationale that could lead to criterion waiver is a determination or confirmation by NMFS biologists that the smallest fry-sized fish will likely not be present at a proposed screen site. Therefore, the juvenile fish screen approach velocity criterion of 0.4 ft/s could be increased to match the smallest life stage expected at the screen site. A guideline is a range of values or a specific value for fishway design, maintenance or operation that may change when site-specific conditions are factored into the conceptual fishway design. For the purposes of this document guidelines are preceded by the word "should." Guidelines should be followed in the fishway design until site-specific information indicates that a different value would provide better fish passage conditions or solve site-specific issues. An example of site-specific rationale that could lead to a modified guideline is when the maximum river depth at a site is 3 feet, as compared to the design guideline for a fishway entrance depth of 6 feet. In this example, safe and timely fish passage could be provided by modifying the guideline to match the depth in the river. It is the responsibility of the applicant to provide compelling evidence in support of any proposed waiver of criteria or modification of a guideline for NMFS approval early in the design process, well in advance of a proposed Federal action. After a decision to provide passage at a particular site has been made, the following design criteria and guidelines are applicable, in addition to those described throughout Section 3.

12.2 Scope

The term infiltration gallery, in this document, refers to a water collection system that is installed in the zone of surface water influence, for the purpose of conveying water to either a pumped or gravity-fed water distribution network (see Figure 12-1). The infiltration gallery is intended to be a substitute for a surface-based diversion system that is normally installed above the bed of the stream.

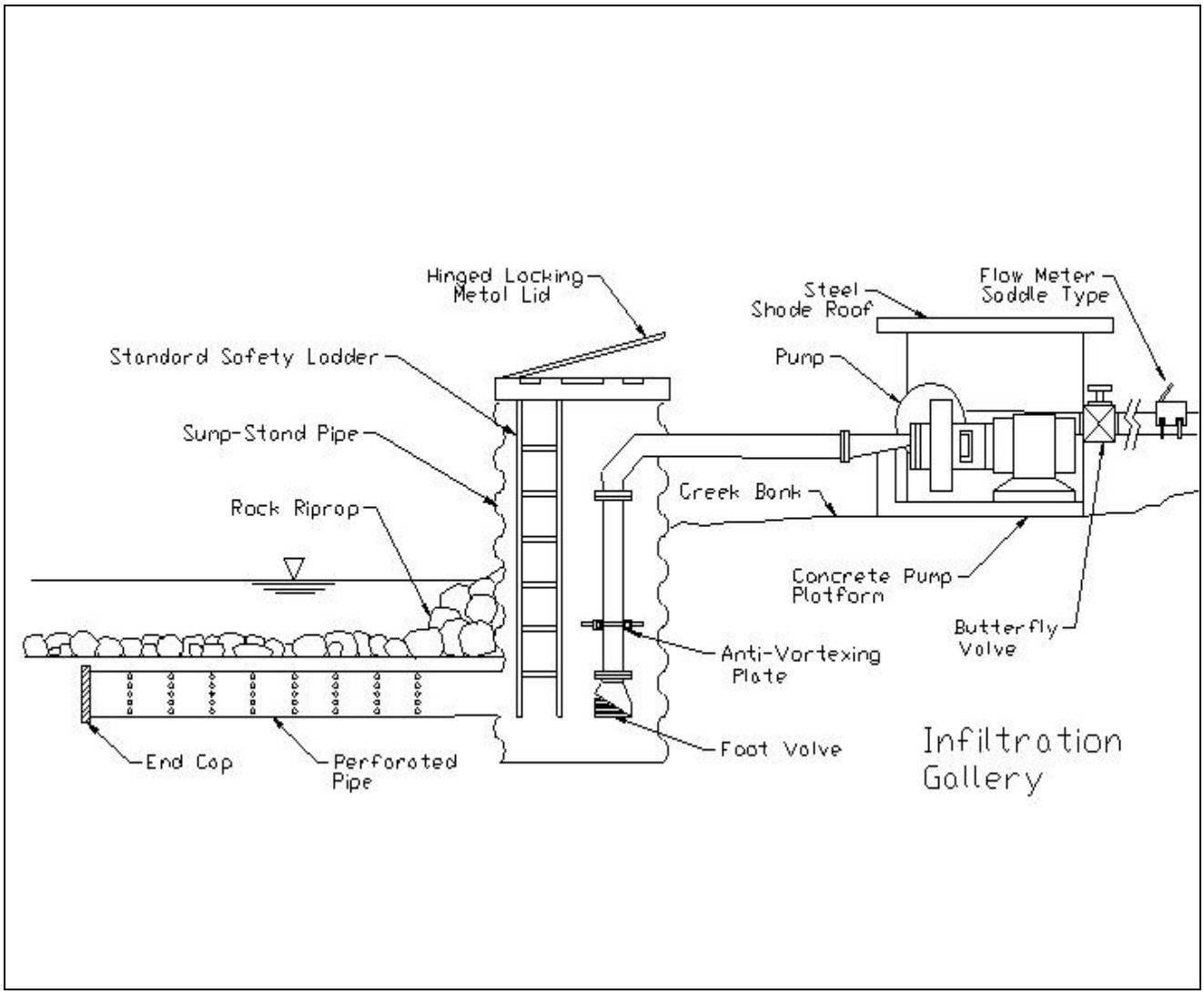

Figure 12-1. Cross Section of an Example Infiltration Gallery

12.3 Selection of Appropriate Screen Technology

Due to their location below the stream bed, infiltration galleries are prone to become ineffective due to plugging by sediments. In addition to reducing the flow capacity of the facility, plugged galleries also increase the risk to small fish due to the creation of velocity hot spots. Since very few existing infiltration galleries include effective self-cleaning systems, it is a common practice to repair plugged galleries by digging them up and rebuilding them. This process may create enormous disruption to the river habitat and to the diverters' ability to divert water. Therefore, the designer should select an infiltration gallery as the preferred diversion method only after a thorough review of the benefits and risks of using conventional screens indicates that an infiltration gallery may create less risk for fish and their habitat.

12.4 Site Selection

NMFS intends to only permit infiltration galleries at stream sites that exhibit sufficient natural fluvial processes to minimize sediment deposition on top of the infiltration gallery to the maximum practical extent. The sealing of infiltration galleries with transported *bedload* sediments seems to be a common mode of failure. Infiltration galleries should not be installed at sites where natural sedimentation occurs that would plug a gallery.

12.5 Design: Infiltration Galleries

12.5.1 Specific Criteria and Guidelines - Design

12.5.1.1 Design Objectives: The infiltration gallery must be designed to:

- Provide the same volume, rate, and timing of water supply that the diverter would be entitled to when using a surface-based diversion;
- Withdraw water primarily from the portion of the stream located directly above the infiltration gallery; and
- Provide at least the same level of fish protection as conventional screens.

12.5.1.2 Minimum Depths and Velocities over Infiltration Galleries: Infiltration galleries should not be operated when the water depth above the river bed over any part of the infiltration gallery is less than 0.5 feet. Use of temporary impoundments such as push-up berms and other dams to raise the water level is not permitted. The minimum stream velocity at low flow should be 2 ft/s.

12.5.1.3 Screen Material Opening: Infiltration galleries installed with less than 24 inches of gravel cover should meet juvenile fish screen criteria, as described in Section 11.

12.5.1.4 Flow Direction: Infiltration galleries should be designed to withdraw flow primarily from the zone directly above the intake screen.

12.5.1.5 Imported Gravels: Rock used to backfill over the infiltration gallery must be designed and approved by the design engineer. The backfill material selection must also be approved by NMFS.

12.5.1.6 Induced Vertical Approach Velocity at the Stream Bed: The maximum vertical interstitial velocity through the substrate, V_s , must not exceed 0.05 ft/s when the substrate is new and/or after *backwashing* (see Figure 12-1).

V_s is defined according to the following calculation:

$$V_s = \frac{Q}{(A_{eff})(\eta)}$$

where: V_s = average vertical interstitial velocity through the gravel substrate

Q = diverted flow rate

A_{eff} = plan view area of gravel substrate through which the flow is assumed to pass

η = *porosity* of gravel substrate

12.5.1.7 Determination of Plugged Gallery: As with conventional screen technology, it is essential to be able to measure the *head loss* through the screening material (Section 11.7). As a minimum, sufficient instrumentation must be installed to measure the hydraulic grade line (HGL) values, as shown schematically in Figure 12-1. The gallery material must be *backwashed* when the *head loss* measurements indicate that V_s is greater than or equal to 0.10 ft/s. If *backwashing* does not reduce V_s below 0.10 ft/s then the gallery must be shut down and repaired.

12.5.1.8 Backwashing: All infiltration galleries must be designed to be capable of being *backwashed*. *Backwashing* may be accomplished using air or water or both. The *backwash* system must be designed to thoroughly clean all of the material in the Effective Cleaning Zone (Figure 12-1). The Effective Cleaning Zone is the volume of filter medium that the designer has assumed contributes about 90% of the diverted flow rate.

12.5.1.9 Limitations/Cessation of Use:

- Infiltration galleries should not be constructed in areas where spawning may occur.
- Should spawning occur within 10 feet of a portion of an infiltration gallery, then use of those portions of the infiltration galleries within 10 feet of the *redd* should be discontinued for 90 days, or as directed by NMFS.
- Instream excavation to repair infiltration galleries is not included in the scope of permitted work beyond 90 days from the date of commencement of initial instream construction, or the end of the approved work period, whichever is earlier, unless performed when there is no flowing water in

the creek. This restriction does not apply to repairs that do not disturb the river bed or banks.

- Failed infiltration galleries must not be replaced until the failure mechanism is identified, and a subsequent design is provided that eliminates future failures due to the identified failure mechanism.
- Excavation for infiltration gallery repair must not be conducted, unless specifically approved by NMFS.

12.5.1.10 Qualifications of Infiltration Gallery Designers: The design of infiltration galleries must be performed by an appropriately qualified engineer or engineering geologist, and the drawings should be signed by the designer and/or stamped with his/her seal. The design of each infiltration gallery must be reviewed and approved by NMFS.

12.5.1.11 Operations and Maintenance: Infiltration galleries must be operated and maintained in accordance with Section 14.

13. TEMPORARY AND INTERIM PASSAGE FACILITIES

Where construction and/or modifications to artificial impediments (e.g., dams) or upstream passage facilities are planned, upstream and downstream passage may be adversely impacted. If possible, these activities should be scheduled for periods when migrating fish are not present, as specified in the in-water work period allowable for construction of facilities in streams. However, this may not always be possible or advisable. In these cases, an interim fish passage plan must be prepared and submitted to NMFS for approval, in advance of work in the field. Criteria listed previously in this document also apply to the interim passage plan. Where this is not possible, project owners must seek NMFS approval of alternate interim fish passage design criteria, and a final interim passage plan.

14. OPERATIONS AND MAINTENANCE RESPONSIBILITIES

Passage facilities at impediments must be operated and maintained properly for optimum, or even marginal, success. The preceding criteria are intended for use in the design of passage facilities; however, failure to operate and maintain these facilities to optimize performance in accordance with design may result in compromised fish passage, and ultimate deterioration of the entire facility. Therefore, NMFS requires facility operators to commit to long-term responsibility for operations, maintenance, and repair of fish facilities described herein, to ensure protection of fish on a sustained basis. This includes immediate restoration of the passage facility (including repair of damage and sediment/gravel removal) after flooding, and prior to the arrival of migratory fish. Where facilities are inadequately operated or maintained, and mortality of listed fish can be documented, the responsible party is liable to enforcement measures as described in Section 9 of the ESA.

An operation and maintenance plan must be drafted and submitted to NMFS for approval. This plan must include a brief summary of operating criteria posted at the passage facility or otherwise made available to the facility operator. Staff gages must be installed and maintained at critical areas throughout the facility in order to allow personnel to easily determine if the facility is being operated within the established design criteria. Comprehensive operation and maintenance plans for a group of projects (e.g., road maintenance plans for culverts, small screen facilities, etc.) will satisfy this criterion, so long as NMFS is in agreement with the operation and maintenance of passage facilities.

15. POST-CONSTRUCTION EVALUATION

15.1 Introduction – Post Construction Evaluation

Post-construction evaluation is important to ensure that the intended results of the *fishway* design are accomplished and to assist in ensuring that mistakes are not repeated elsewhere. If a post-construction evaluation may be required, NMFS will identify that need early in the design process. Large facilities, experimental devices, and facilities that deviate widely from these previous guidelines or criteria are likely candidates for hydraulic and biological evaluation. These evaluations are not intended to cause extensive retrofits of any given project unless the as-built installation does not reasonably conform to the design guidelines, or an obvious fish passage problem continues to exist. Over time, NMFS anticipates that the second and third elements of these evaluations may be abbreviated as commonly used designs are evaluated and fine-tuned to ensure optimal passage conditions.

There are three parts to this evaluation: (1) verify that the fish passage system is installed in accordance with the approved design and that construction procedures are sound; (2) measure hydraulic conditions to ensure that the facility meets these guidelines and criteria, and (3) perform biological assessment to confirm that hydraulic conditions are resulting in successful passage. NMFS technical staff may assist in developing a hydraulic or biological evaluation plan to fit site-specific conditions and species, but in any case, evaluation plans are subject to approval by NMFS.

15.2 Evaluation of Juvenile Fish Screens

Hydraulic evaluations of juvenile fish screens must include confirmation of uniform *approach velocity* and the requisite *sweeping velocity* over the entire screen face. Confirmation of approach and sweeping velocities must consist of a series of velocity measurements encompassing the entire screen face, divided into a grid with each grid section representing no more than 5% of the total diverted flow through the screen (i.e., at least 20 grid points must be measured). The approach and *sweeping velocity* (parallel and perpendicular to the screen face) should be measured at the center point of each grid section, as close as possible to the screen face without entering the boundary layer turbulence at the screen face. Uniformity of *approach velocity* is defined as being achieved when no individual *approach velocity* measurement exceeds 110% of the criteria. In addition, velocities at the entrance to the bypass, *bypass flow* amounts, and total flow should be measured and reported.

15.3 Biological Evaluation

Depending on the site and its potential for adverse biological impacts, detailed biological evaluations and/or monitoring may likely be required and are the responsibility of the project sponsor. The need for and scale of biological evaluation may be identified by NMFS early in the design process. If a passage facility will be encountered by the majority of the fish migration, and if waivers to the criteria are granted, biological evaluation will likely be required.

16. EXPERIMENTAL FISH GUIDANCE DEVICES

16.1 Introduction – Experimental Fish Guidance Devices

NMFS believes that conventional fish passage facilities constructed to the criteria and guidelines described above are most appropriate for utilization in the protection of salmon and steelhead at all impediments. However, the process described below delineates an approach whereby experimental fish passage devices can be evaluated and, if comparable performance is confirmed to the satisfaction of NMFS, installed in lieu of conventional passage facilities.

16.2 Juvenile Fish Entrainment at Intakes

The injury and death of juvenile fish at water diversion intakes have long been identified as a major source of overall fish mortality (Spencer1928; Hatton 1939; Hallock and Woert 1959; Hallock 1987). Fish diverted into power turbines incur up to 40% or more immediate mortality, while also experiencing injury, disorientation, and delay of migration that may increase predation related losses (Bell 1991). Fish entrained into agricultural and municipal water diversions may experience 100% mortality, particularly if no egress route back to the river is provided. Diversion mortality may cause decline in fish populations, especially if instream habitat is unsuitable for any aspect of spawning, incubation, rearing or migration. For the purposes of this document, diversion losses include turbine, irrigation, municipal, and all other potential fish losses related to human water use.

Positive-exclusion barrier screens that screen the entire diversion flow have long been used to prevent or reduce entrainment of juvenile fish for diversions of up to 6000 cfs, and their designs are discussed in Section 11. In recent decades, design improvements have been implemented to increase the biological effectiveness of *positive-exclusion* screen and *bypass system*s by taking advantage of known behavioral responses to hydraulic conditions. Recent evaluations have consistently demonstrated high success rates (typically greater than 98%) at moving juvenile salmonids past intakes with a minimum of delay, loss, or injury. For diversion flows over 6000 cfs, such as at Columbia River mainstem turbine intakes, submerged traveling screens or bar screens are commonly used. These are not considered *positive-exclusion* screens in the context of this position statement. In addition, large reservoirs often involve consideration of a surface outlet for fish passage, and may offer a superior route of passage as compared to a deep outlet with a positive exclusion screen

The past few decades have also seen considerable effort in developing "startle" systems or other behavioral exclusion devices to elicit a taxis (response) by fish, with an ultimate goal of reducing entrainment. This paper addresses research to be performed for types of fish passage devices not included in the preceding chapters of this document in order to prevent losses at intakes and other passage impediments and presents a position statement for reviewing and implementing future fish protection measures.

Entrainment, impingement, and delay/predation are the primary contributors to the mortality of juvenile migrating salmonids. Entrainment occurs when fish are drawn into the diversion canal or turbine intake. Impingement occurs when a fish is not able to avoid contact with a screen surface, *trashrack*, or debris at the intake. This may cause bruising, descaling and other injuries.

Impingement, if prolonged, repeated, or occurring at high velocities, also causes direct mortality. Predation (which is the leading cause of mortality at some diversion sites) occurs when fish are preyed upon by aquatic or avian animals. Delay at intakes increases predation by stressing or disorienting fish and/or by providing habitat for predators.

Design criteria for *Positive-exclusion screen and bypass system*s (PESBS) (Section 11) have been developed, tested, and proven to minimize adverse impacts to fish at diversion sites. Screens with small openings and fish-tight seals are positioned at a slight angle to flow. This orientation allows fish to be guided to safety at the downstream end of the screen, while they resist being impinged on the screen face. These screens are very effective at preventing entrainment (Pearce and Lee 1991). Carefully designed *bypass system*s minimize fish exposure to screens and provide hydraulic conditions that safely return fish to the river, thereby preventing impingement (Rainey 1985). The PESBS are designed to minimize entrainment, impingement, and delay/predation from the point of diversion through the facility to the bypass outfall.

PESBS have been installed and evaluated at numerous facilities (Abernathy et al. 1989, 1990; Rainey 1990; and Johnson 1988). A variety of screen types (e.g., fixed-vertical, drum, fixed-inclined) and *screen material*s (e.g., woven cloth [mesh], perforated plate, profile wire) have proven effective, when used in the context of a satisfactory design for the specific site. Facilities designed to previously referenced criteria consistently resulted in a guidance efficiencies of over 98% (Hosey 1990; Neitzel 1985, 1986,1990a,b,c,d; Neitzel 1991).

The main detriment of PESBS is cost, because of the low velocity requirement and structure complexity. At the headworks, the need to clean the screen, remove trash, control sediment, and provide regular maintenance (e.g., seasonal installation, replacing seals, etc.) also increases costs.

16.3 Behavioral Devices

There has been considerable effort since 1960 to develop less expensive behavioral devices as a substitute for conventional fish protection (EPRI 1986). A behavioral device, as opposed to a conventional passage system, requires volitional taxis on the part of the fish to avoid entrainment. Some devices were investigated with the hope of attracting fish to a desired area while others were designed to repel fish. Most studies focused on soliciting a behavior response, usually noticeable agitation, from the fish.

Investigations of prototype startle-response devices document that fish guidance efficiencies are consistently much lower for these devices than for conventional screens. Experiments show that there may be a large behavioral variation in startle responses between individual fish of the same size and species. Therefore, it cannot be predicted that a fish will always move toward or away from that stimuli. Until shown conclusively in laboratory studies, it should not be assumed that fish can discern where a signal is coming from and what constitutes the clear path to safety.

If juvenile fish respond to a behavioral device, limited size and swimming ability may preclude small fish from avoiding entrainment (even if they have the understanding of where to go and have the desire to get there). Another concern is repeated exposure; fish may no longer react to a signal after an acclimation period. In addition to vagaries in the response of an individual fish, behavior variations due to species, life stage, and water quality conditions can be expected.

Another observation is that past field tests of behavioral devices have been deployed without consideration of how controlled ambient hydraulic conditions (i.e., the use of a *training wall* to create uniform flow conditions, while minimizing stagnant zones or eddies that may increase exposure to predation) may optimize fish guidance and safe passage away from the intake. Failure to consider that hydraulic conditions may play a large role in guiding fish away from the intake is either the result of the desire to minimize costs or the assumption that behavioral devices may overcome the tendency for poor guidance associated with marginal hydraulic conditions. The provision of satisfactory hydraulic conditions is a key element of PESBS designs.

The primary motivation for selection of behavioral devices relates to cost, and possibly to ease maintenance issues with PESBS. However, much of the cost in PESBS is related to construction of physical structures to provide hydraulic conditions that are known to optimize fish guidance. Paradoxically, complementing the behavioral device with hydraulic control structures needed to optimize juvenile passage will compromise much of the cost advantage relative to PESBS.

Currently few behavioral devices are being used for stand-alone fish protection in the field. Those that have been installed and evaluated seldom show consistent guidance efficiencies over 60% (Vogel 1988; EPRI 1986). The louver system is an example of a behavioral device with a poor record, particularly for *fry*-sized salmonids. Entrainment rates were high, even with favorable hydraulic conditions, due to the presence of smaller fish (Vogel 1988; Cramer 1973; Bates 1961). Due to their poor performance, most of these systems were eventually replaced by PESBS.

16.4 Process for Developing Experimental Fish Passage Technology

Development of new passage concepts may have the potential to provide fish passage. In general, the process for developing new upstream adult passage technology and gaining NMFS approval is the same as for downstream juvenile fish passage. Some of these concepts are currently in development (e.g., stream simulation and roughened channel designs), and have existing field prototype installations that have been assessed to some degree.

There is potential for future development of new passage devices that may safely pass fish at a rate comparable with conventional technology. These new concepts are considered "experimental" until they have been through the process described herein and have been proven in a prototype evaluation validated by NMFS. These prototype evaluations should occur over the foreseeable range of adverse hydraulic and water quality conditions (e.g., temperature, dissolved oxygen). NMFS will not discourage research and development on experimental fish protection devices, but the following elements should be addressed during the process of developing experimental juvenile passage protection concepts:

1. **Earlier Research.** A thorough review of similar methods used in the past should be performed. Reasons for substandard performances should be clearly identified.

2. **Study Plan.** A study plan should be developed and presented to NMFS for review and concurrence. It is essential that tests occur over a full range of possible hydraulic, biological, and ecological conditions that the device is expected to experience. Failure to receive study plan endorsement from NMFS may result in disputable results and conclusions.

3. **Laboratory Research.** Laboratory experiments under controlled conditions should be developed using species, size, and life stages intended to be protected. For behavioral devices, special attention must be directed at providing favorable hydraulic conditions and demonstrating that the device clearly induces the planned behavioral response. Studies should be repeated with the same test fish to examine any acclimation to the guidance device.

4. **Prototype Units.** Once laboratory tests show high potential to equal or exceed success rates of conventional passage devices, it is appropriate to further examine the new device as a prototype under real field conditions. Field sites must be appropriate to (1) demonstrate durable performance at all expected operational and natural variables, (2) evaluate the species, or an acceptable surrogate, that would be exposed to the device under full operation, and (3) avoid unacceptable risk to depressed or listed stocks at the prototype locations.

5. **Study Results.** Results of both laboratory tests and field prototype evaluations must demonstrate a level of performance equal to or exceeding that of conventional fish passage devices before NMFS may support permanent installations.

16.5 Conclusions

Proven fish passage and protection facilities designs are available to provide successful passage at most fish passage impediments. Periodically, major initiatives have been advanced to examine the feasibility of experimental passage systems. Results were generally poor or inconclusive, with low guidance efficiencies attributable to the particular device used. Often results were based on a small sample size, or varied with operational conditions. In addition, unforeseen operational and maintenance problems (and safety hazards) were sometimes a byproduct. Nevertheless, some of these passage systems have shown potential for success. To further advance fish protection technology, NMFS will not oppose tests that proceed in accordance with the tiered process outlined above. To ensure no further detriment to any fish resource, including delays in implementation of acceptable passage facilities, experimental field testing should occur simultaneous to design and development of conventional passage design for that site. This conventional system should be scheduled for installation in a reasonable time frame, independent of the experimental efforts. In this manner, if the experimental guidance system once again does not prove to be as effective as proven conventional technology, a conventional passage design may be implemented without additional delay and detriment to the resource.

17. SUGGESTED READING AND REFERENCES

Abernathy, C.S., D.A. Neitzel, and E.W. Lusty. 1989. Velocity Measurements at Six Fish Screening Facilities in the Yakima Basin, Washington, Summer 1988. Annual report to the Bonneville Power Administration.

Abernathy, C.S., D.D. Neitzel, and E.W. Lusty. 1990. Velocity Measurements at Three Fish Screening Facilities in the Yakima River Basin, Summer 1989. U.S. Department of Energy Bonneville Power Administration Division of Fish and Wildlife.

Aisenbrey, A.J., R.B. Hayes, H.J. Warren, D.L. Winsett and R.B. Young, 1974. Design of Small Canal Structures. U.S. Department of Interior Bureau of Reclamation. U.S. Government Printing Office, Denver, CO.

Baker, C.O. and F.E. Votapka. 1990. Fish Passage Through Culverts. Federal Highways Administration & USDA Forest Service. FHWA-FL-90-006. 67 pages. (Available from USDA Forest Service publications, San Dimas Laboratory, CA).

Bates, D.W. and S.G. Jewett, Jr. 1961. Louver Efficiency in Deflecting Downstream Migrant Steelhead Transaction of the American Fisheries Society, Vol. 90., No. 3, p. 336-337.

Bates, K.M. 1988. Screen Criteria for Juvenile Salmon, Washington Department of Fisheries. Olympia, WA.

Bates, K.M. 1992. *Fishway* Design Guidelines for Pacific Salmon. Working paper 1.6. (Available from WDFW. 600 Capitol Way North, Olympia, WA, 98501-1091.)

Bates, K.M and R. Fuller. 1992. Salmon *Fry* Mesh Study. State of Washington Department of Fisheries. Olympia, WA.

Bates, K.M. 1993. Fish passage Policy and Technology - Proceedings of a Symposium Sponsored by the Bioengineering Section of the American Fisheries Society, Portland, OR.

Bell. M. C. 1991. Fisheries handbook of engineering requirements and biological criteria. Fish Passage and Development Evaluation Program, U.S. Army Corps of Engineers, Portland, OR.

Beechie, T., E. Beamer, and L. Wasserman. 1994. Estimating Coho Salmon Rearing Habitat and *Smolt* Production Losses in a Large River Basin, and Implications for Habitat Restoration. North Am. J. Fish. Mgt. 14:797 - 811.

Behlke, C.E., D.L. Kane, R.F. McLean, and M.D. Travis. 1991. Fundamentals of Culvert Design for Passage of Weak-Swimming Fish, Final Report. Alaska DOT&PF and USDT, Federal Highway Administration, FHWA-AK-RD-90-10. 177 pages.

Bell, Milo C., 1991. "Revised Compendium on the Success of Passage of Small Fish Through Turbines." Report for U.S. Army Corps of Engineers, North Pacific Division, Contract No. DACW-57-88-C-0070. Portland, OR. North Pacific Division Army Corps of Engineers (COE). May 1976. Fourth Progress Report on Fisheries Engineering Research Program 1966-1972, Report #32. Portland, Oregon.

Bigelow, J.P. and R.R. Johnson. 1996. Estimates of Survival and Condition of Juvenile Salmonids passing Through the Downstream Migrant Fish Protection Facilities at Red Bluff Diversion Dam on the Sacramento River, Spring and Summer 1994. U.S. Fish and Wildlife Service Annual Report. North Central Valley Fish and Wildlife Office, Red Bluff, California.

Brett, J.R., Hollands, M., and Alderdice, D.F. 1958. "The effect of temperature on the cruising speed of young sockeye and coho salmon" Fisheries Research Board of Canada, Journal 15(4): pp 587-605.

Cada, G. F. 1998. Fish passage mitigation at hydroelectric power projects in the United States, pp. 208–219. In: Fish Migration and Fish Bypasses: Proceedings of the Symposium. (Jungwirth, M., S. Schmutz, and S. Weiss, Eds.). Vienna, Austria: Fishing News Books.

California Department of Fish and Game. 1998. California Salmonid Stream Habitat Restoration Manual, 3rd Edition, Part X Fish Passage Evaluation At Road Crossings (Part X is in preparation, expected fall 2001).

California Department of Fish and Game. 2001. Culvert Criteria for Fish Passage.

Clay, C. H. 1995. Design of *Fishway*s and Other Fish Facilities. Boca Raton, Florida: CRC Press.

Coutant, C. C. (Ed.). 2001. Behavioral technologies for fish guidance. American Fisheries Society, Symposium 26, Bethesda, MD.

Cramer, D.P. 1982. Evaluation of Downstream Migrant *Bypass system* - T.W. Sullivan Plant, Willamette Falls (Progress Report for Fall 1981 and Spring 1982 dtd October 11, 1982) PGE.

Chow, V.T. 1959. Open-channel Hydraulics. McGraw-hill Book Company.

Davis, G.E., J. Foster, C.E. Ward and P. Doudoroff. 1968. The Influence of Oxygen on the Swimming Performance of Juvenile Pacific Salmon at Various Temperatures. Technical Paper No. 1475, Oregon Agricultural Experiment Station, Corvallis, OR.

Darling, D.D. 1991. Evaluation of an Eicher Screen at Elwha Dam. Proceedings of the International Conference on Hydropower, July 1991. Denver, CO.

Electric Power Research Institute. 1988. Proceedings: Fish Protection at Steam and Hydroelectric Power Plants, EPRI CS/EA/AP-5663-SR, Electric Power Research Institute, Palo Alto, CA.

Electric Power Research Institute. 1990. Fish Protection Systems for Hydro Plants, EPRI GS-6712, Electric Power Research Institute, Palo Alto, CA.

Electric Power Research Institute, prepared by Stone & Webster Engineering Corporation. 1994. Biological Evaluation of the Modular Inclined Screen for Protecting Fish at Water Intakes, EPRI TR-104121, Electric Power Research Institute, Palo Alto, CA.

Electric Power Research Institute. 1996. Evaluation of the Modular Inclined Screen (MIS) at the Green Island Hydroelectric Project: 1995 Test Results, EPRI TR-106498, Electric Power Research Institute, Palo Alto, CA.

Electric Power Research Institute, prepared by Stone & Webster Engineering Corporation. 1986. Assessment of downstream migrant fish protection technologies for hydroelectric application. EPRI AP-4711, Electric Power Research Institute, Palo Alto, CA.

Electric Power Research Institute. 1991. Evaluation of an Eicher Screen at Elwah Dam: Spring 1990 test results, EPRI GS/EN-7036, Palo Alto, CA.

Easterbrooks, J.A. 1984. Juvenile Fish Screen Design Criteria: A review of the Objectives and Scientific Data Base. State of Washington Department of Fisheries. Yakima, WA.

EPRI (Electric Power Research Institute). 1986. Assessment of Downstream Migrant Fish Protection technologies for hydroelectric application. EPRI, Palo Alto, CA.

Evans, W.A. and B. Johnston. 1980. Fish Migration and Fish Passage: a Practical Guide to Solving Fish Passage Problems. U.S. Forest Service, EM - 7100 - 2, Washington, D.C.

Federal Energy Regulatory Commission. 2004. Evaluation of mitigation effectiveness at hydropower projects: fish passage. Draft report 2004 1008-0140, Office of Energy Projects, Division of Hydropower Administration and Compliance, Washington D.C.

Fisher, F.W. 1981. Long Term Swimming Performance of American Shad and Chinook Salmon. State of California Department of Fish and Game, Administrative Report No. 81-2, Bay-Delta Fisheries Project, Sacramento, CA.

Francfort, J.E., G.F. Cada, D.D. Dauble,R.T. Hunt, D.W. Jones, B.N. Rinehart, G.L. Summers, and R.J. Costello. 1994. Environmental Mitigation at Hydroelectric Projects. Volume II. Benefits and Costs of Fish Passage and Protection. Idaho National Engineering Laboratory, Idaho Falls, ID.

Furniss, M.J., T.D. Roelofs, and C.S. Yee. 1991. Road Construction and Maintenance. American Fisheries Society Special Publication 19:297-323.

Gebhards, S., and J. Fisher. 1972. Fish Passage and Culvert Installations. Idaho Fish and Game Rep. 12 pages.

Glova, G.J. and F.E. McInerney. 1972. Critical Swimming Speeds of Coho Salmon *Fry* to *Smolt* Stages in Relation to Salinity and Temperature. Journal of the Fisheries Board of Canadian Journal 34:151-154.

Greenland, D.C. and A.E. Thomas. 1972. Swimming Speed of Fall Chinook Salmon *Fry*. Transactions of the American Fisheries Society, 101(4):696-700.

Groot, C., and L. Margolis, editors. 1991. Pacific Salmon Life Histories. Univ. British Columbia Press, Vancouver. 564 pages.

Haro, A., M. Odeh, J. Noreika, and T. Castro-Santos. 1998. Effect of water acceleration on downstream migratory behavior and passage of Atlantic salmon juvenile salmonids and juvenile American shad at surface bypasses. Trans. Am. Fish. Soc., 127: 118–127.

Hallock, R.J., and W.F. Van Woert. October 1959. A Survey of Anadromous Fish Losses in Irrigation Diversions from the Sacramento and San Joaquin Rivers. California Fish and Game. Vol. 45, No. 4, pp. 227-266.

Hallock, R.J. 1977. A Description of the California Department of Fish and Game Management Program and Goals for the Sacramento River System Salmon Resource. California Fish and Game, Anadromous Fisheries Branch Administrative Report. 16 pp.

Hallock, R.J. 1977. A Description of the California Department of Fish and Game Management Program and Goals for the Sacramento River System Salmon Resource. California Fish and Game, Anadromous Fisheries Branch Administrative Report. 16 pp.

Hanson C.H. and H.W. Li, 1983. Behavioral Response of Juvenile Chinook Salmon to *Trash rack* Bar Spacing. California Fish and Game 69(1) 18-22.

Hassler, T.J. 1987. Species Profiles: Life Histories and Environmental Requirements of Coastal
Fishes and Invertebrates (Pacific Southwest) Coho Salmon. U.S. Fish Wildl. Serv. Biol.
Rep. 82(11.70). U.S. Army Corps of Engineers, TR EL-82-4. 19 pages.

Hatton, S. 1940. Progress Report on Central Valley Fish, 1939. California Fish and Game, 26(3) pp. 334-373.

Hosey and Associates and Fish Management Consultants. 1990. Easton Facility Evaluation. Prepared for U.S. Bureau of Reclamation, Contract No. 7-CS-10-07720, Boise, Idaho.

Hosey and Associates and Fish Management Consultants. 1990. Evaluation of the Chandler, Columbia, Roza and Easton Screening Facilities, Completion Report. Prepared for U.S. Bureau of Reclamation, Contract No. 7-CS-10-07720, Boise, Idaho.

Hosey and Associates and Fish Management Consultants. 1988. Chandler Facility Evaluation. Prepared for U.S. Bureau of Reclamation, Contract No. 7-CS-10-07720, Boise, Idaho.

Hosey and Associates and Fish Management Consultants. 1988. Columbia Facility Evaluation. Prepared for U.S. Bureau of Reclamation, Contract No. 7-CS-10-07720, Boise, Idaho.

Johnson, A. and J.F. Orsborn. Undated, circa 1990. Welcome to Culvert College. Washington Trout, Duvall, WA. 67 pages.

Johnson, G. E., B. D. Ebberts, D. D. Dauble, A. E. Giorgi, P. G. Heisey, R. P. Mueller, and D. A. Neitzel. 2003. Effects of jet entry at high flow outfalls on juvenile Pacific salmon. North Am. J. Fish Manage., 23: 441–449.

Johnson, R.C. 1995. Fish Passage Evaluation Tests in the North Shore *Fishway* Hydroelectric Project at The Dalles Dam. Prepared for North Wasco County People's Utility District, The Dalles, Oregon.

Jones, S.T., G.M. Starke and R.J. Stansell. 1998. Predation by Gulls and Effectiveness of Predation Control Measures at Bonneville, The Dalles and John Day Dams in 1997. U.S. Army Corps of Engineers CENWP-CO-SRF, Cascade Locks, OR.

Johnson, P.L. 1988. Hydraulic Design of Angled Drum Fish Screens. In: Proceedings of the Electric Power Research Institute Conference on Fish Protection at Steam and Hydro Plants, San Francisco, CA., Oct. 28-30, 1987. EPRI CS/EA/AP-5663-SR.

Jungwirth, M. S., Schmutz, and S. Weiss (Eds.). 1998. Fish Migration and Fish Bypasses. Proceedings of a symposium. London: Fishing News Books (1998).

Kano, R.M. 1982. Responses of Juvenile Salmon and American Shad to Long Term Exposure to Two-Vector Velocity Flows. Interagency Ecological Study Program for the Sacramento-San Joaquin Estuary, Technical Report No. 4., Stockton, CA.

Kay, AR., and R.B. Lewis. 1970. Passage of Anadromous Fish Through Highway Drainage
Structures. California Division of Highways, Dist. 01 Res. Rep. 629110. 28 pages.

Knapp, S.M.(editor). 1992. Evaluation of the Juvenile Bypass and Adult Fish Passage Facilities at Water Diversions on the Umatilla River, Annual and Interim Progress Reports October 1990-September 1991. Project No. 89-024-01. Prepared for Bonneville Power Administration, Portland, Oregon.

Knapp, S.M.(editor). 1994. Evaluation of the Juvenile Bypass and Adult Fish Passage Facilities at Water Diversions on the Umatilla River, Annual Report 1993. Project No. 89-024-01. Prepared for Bonneville Power Administration, Portland, Oregon.

Katopodis, C. 1992. Introduction to *fishway* Design. Working Document from Fish Passageways and Diversion Structures Course presented by National Education and Training Center, USFWS.

Lauman, J.E. 1976. Salmonid Passage at Stream-Road Crossings. Oregon Dept. of Fish and Wildlife.

Marquette, M. W. and C. W. Long. 1971. Laboratory studies of screens for diverting juvenile salmon and trout from turbine intakes. Trans. Am. Fish. Soc., 3: 439–447.

McClellan, T.J. 1970. Fish Passage Through Highway Culverts. U.S. Dept. Trans., Federal
Highway Administration and Oregon State Game Comm., Portland OR. 16 pages.

McElhany, P., M.H. Ruckelshaus, M.J. Ford, T.C. Wainwright, and E.P. Bjorkstedt. 2000. Viable salmonid populations and the recovery of evolutionarily significant units. U.S. Dept. Commer., NOAA Tech. Memo. NMFS-NWFSC-42,156 p.

Mueller, R.P., C.S. Abernathy, and D.A. Neitzel. 1995. A Fisheries Evaluation of the Dryden Fish Screening Facility Annual Report 1994. Project No. 85-062. Prepared for Bonneville Power Administration, Portland, Oregon.

Meehan, W.R., editor. 1991. Influences of Forest and Rangeland Management on Salmonid
Fishes and Their Habitats. American Fisheries Society Special Publication 19.

Nigro, A.A.(editor). 1990. Evaluation of the Juvenile Bypass and Adult Fish Passage Facilities at Three Mile Dam, Umatilla River, Annual Progress Report October 1989. Project No. 89-024-01. Prepared for Bonneville Power Administration, Portland, Oregon.

Nietzel, D.A. and C.S. Abernathy. 1995. Movement and Injury Rates for three Life Stages of spring Chinook Salmon: A comparison of Submerged Orifices and an Overflow *Weir* for Fish Bypass in a Modular Rotary Drum Fish Screen. Prepared for Bonneville Power Administration, Portland, Oregon.

Nietzel, D.A., C.S. Abernathy, E.W. Lusty and L.A. Prohammer. 1985. A Fisheries Evaluation of the Sunnyside Canal Fish Screening Facilities Spring 1985 Annual Report. Contract No. DE-AC06-RLO. Prepared for Bonneville Power Administration, Portland, Oregon.

Neitzel, D.A., C.S. Abernathy, and W.W. Lusty. 1986. A Fisheries Evaluation of the Richland and Toppenish/Satus Canal Fish Screening Facilities, Spring 1986. Annual Report to the Bonneville Power Administration.

Neitzel, D.A., C.S. Abernathy, and E.W. Lusty. 1990. A Fisheries Evaluation of the Wapato, Sunnyside and Toppenish Creek Canal Fish Screening Facilities, Spring 1988.

Nietzel, D.A., C.S. Abernathy and E.W. Lusty. 1990. A Fisheries Evaluation of the Westside Ditch and Wapato Canal Fish Screening Facilities Spring 1989 Annual Report. Project No. 85-62. Prepared for Bonneville Power Administration, Portland, Oregon.

Nietzel, D.A. and C.S. Abernathy. 1995. Movement and Injury Rates for three Life Stages of spring Chinook Salmon: A comparison of Submerged Orifices and an Overflow *Weir* for Fish Bypass in a Modular Rotary Drum Fish Screen. Prepared for Bonneville Power Administration, Portland, Oregon.

Neitzel, D.A., C.S. Abernathy, and E.W. Lusty. 1991. Evaluating of Rotating Drum Screen Facilities in the Yakima River Basin, South-Central Washington State. In: Fisheries Bioengineering Symposium. American Fisheries Society Symposium 10. Bethesda, MD.

Neitzel, D.A., C.S. Abernathy, and G.A. Martenson. 1990d. A Fisheries Evaluation of the Westside Ditch and Town Canal Fish Screening Facilities, Spring 1990. Annual Report to the Bonneville Power Administration.

Nietzel, D.A., S.L. Blanton, C.S. Abernathy and D.S. Daly. 1996. Movement of fall Chinook *fry*: A comparison of Approach Angles in a Modular Rotary Drum Fish Screen. Project No. 86-118. Prepared for Bonneville Power Administration, Portland, Oregon.

Neitzel, D.A., T.J. Clune, and C.S. Abernathy. 1990a. Evaluation of Rotary Drum Screens Used to Project Juvenile Salmonids in the Yakima River Basin. In: Proceedings of the International Symposium on *fishway*s '90. Gifu, Japan.

Nordlund, B.D. 1997. Designing Fish Screens for Fish Protection at Water Diversions, in Fish Passageways and Bypass Facilities - West, U.S. Fish and Wildlife Service National Conservation Training Center, Shepardstown, WV.

Normandeau Associates, Inc., Parametrix, Inc., and J. R. Skalski. 1996. Behavior of juvenile salmonids relative to the prototype surface bypass collection channel at Wanapum Dam, Columbia River, Washington. Drumore, PA: Normandeau Associates, Inc.

NRC (National Research Council). 1996. Upstream: salmon and society in the Pacific Northwest. National Academy Press, Washington D.C.

Odeh, M. (Ed.). 1999. Innovations in fish passage technology. Bethesda, MD: American Fisheries Society (1999).

Odeh. M. (Ed.). 2000. Advances in fish passage technology. Bethesda, MD: American Fisheries Society.

ODFW, 1997. Oregon Department of Fish and Wildlife Guidelines and Criteria for Stream-RoadCrossings. 7 pages.

Office of Technology Assessment. Fish passage technologies: protection at hydropower facilities. OTA-ENV-641. Washington, DC: U.S. Government Printing Office.

Ott, R.F. and D.P. Jarrett. Air-Burst Fish Screen Cleaning System for the Twin Falls Hydroelectric Project (unpublished). HDR Engineering, Inc. Bellevue, WA.

Pearce, R.O., J. Ferguson, M. Lindgren and J. Nestler. 1995. Fish Passage and Protection, Chapter 7 in Guidelines for Design of Intakes for Hydroelectric Plants, pp 215-283. American Society of Civil Engineers, New York, NY.

Pearce, R.O., and R.T. Lee. 1991. Some Design Considerations for Approach Velocities at Juvenile Salmonid Screening Facilities. In:Fisheries Bioengineering Symposium. American Fisheries Society Symposium 10. Bethesda, MD.

Poe, T. P., M. G. Mesa, R. S. Shively, and R. D. Peters. 1993. Development of biological criteria for siting and operation of juvenile *bypass system*s: implications for protecting juvenile salmonids from predation, pp. 169–178. In: Fish Passage Policy and Technology (Bates, K., Ed.). Bethesda, MD: American Fisheries Society.

Pearsons, T.N., G.A. McMichael, S.W. Martin, E.L. Bartrand, A. Long, and S.A. Leider. 1996.
Yakima Species Interactions Studies Annual Report 1994. U.S. Department of Energy, Bonneville Power Administration Annual Report 1994. No. DOE/BPB99852-3.

Poulin, V.A., and H.W. Argent. 1997. Stream Crossing Guidebook for Fish Streams, a Working Draft. Prepared for British Columbia Ministry of Forests. 80 pages.

Powers, Pat. 1993. Structures for Passing Juvenile Salmon Into Off-Channel Habitat American Fisheries Society Annual Meeting in Portland in 1993

Rainey, W.S. 1990. Cylindrical Drum Screen Designs for Juvenile Fish Protection at Two Large Diversions. In: Proceedings of the International Symposium on *fishway*s '90 in Gifu. Gifu, Japan.

Rainey, W.S. 1985. Considerations in the Design of Juvenile *Bypass system*s. Paper presented at the Symposium on Small Hydropower and Fisheries. Denver, CO.

Reading, H.H. 1982. Passage of Juvenile Chinook Salmon and American Shad through Various Trashrack Bar Spacings. State of California Department of Fish and Game technical Report 5, Interagency Ecological Study Program for the Sacramento-San Juaquin Estuary. Red Bluff, CA.

Reiser, D. W. and K.T. Oliver. 2002. Review of Projects Employing Conventional Fish Screens - Existing Information Analysis. Prepared for Portland General Electric Company, Portland, OR.

Ruehle, T.E. and C.S. McCutcheon. 1994. PIT-Tag Studies with Juvenile Salmonids at the Chandler Fish Collection Facility, Yakima River, 1990. Project No.90-65. Prepared for Bonneville Power Administration, Portland, Oregon.

Salmonid Restoration Federation Conference. 1996. Culvert Fish Passage Design and Retrofitting Workshop. Fortuna, CA. 30 pages.

Sandercock, F.K. 1991. Life History of Coho Salmon. Pages 397-445 in C. Groot and L. Margolis (eds.), Pacific salmon life histories. Univ. British Columbia Press, Vancouver. 564 pages.

Senn, H., Mack, J. and L. Rothfus. 1984. Compendium of Low-cost Pacific Salmon and Steelhead Trout Production Facilities and Practices in the Pacific Northwest. Project No. 83-353. Prepared for Bonneville Power Administration, Portland, Oregon.

Shirvell, C.S. 1994. Effect of changes in streamflow on the microhabitat use and movement of sympatric juvenile coho salmon (Oncorhynchus kisutch) and chinook salmon (O.tshawytscha) in a natural stream. Can. J. Fish. Aquat. Sci. 51:1644-1652.

Simmons, W.P. 1964. Hydraulic Design of Transitions for Small Canals. U.S. Bureau of Reclamation, Engineering Monograph No. 33, U.S. Government Printing Office, Washington D.C.

Skinner, J.E. 1974. A Functional Evaluation of a Large Louver Screen Installation and Fish Facilities Research on California Water Diversion Projects. In: Proceedings of the Second Workshop on Entrainment and Intake Screening. Johns Hopkins University, Baltimore, MD., February 5-9, 1973.

Smith, L.W. 1982. Clogging, Cleaning, and Corrosion Study of Possible Fish Screens for the Proposed Peripheral Canal. Interagency Ecological Study Program for the Sacramento-San Juaquin Estuary, Sacramento, CA.

Smith, L.S. and L.T. Carpenter. 1987. Salmonid *Fry* Swimming Stamina Data for Diversion Screen Criteria. Final Report. Fisheries Research Institute, University of Washington, Seattle, WA (1987).

Spencer, John. 1928. Fish Screens in California Irrigation Ditches. California Fish and Game, Vol. 14, No. 3, p. 208-210.

Stefan, H. and A. Fu. 1978. Headloss Characteristics of Six Profile-wire Screen Panels Project Report No. 175. St. Anthony Falls Hydraulic Laboratory, Minneapolis, MN.

Stone, J. M. and T. R. Mosey. 2005. Biological evaluation of the Rocky Reach juvenile fish *bypass system* 2004. Chelan County Public Utility District, Wenatchee, WA.

Taft, N. 1994. Fish Passage at Hydroelectric Projects, presented at Hydro's Leading Edge Technology: A Symposium Celebrating ARL's Centennial, Phoenix, AZ.

Taylor, E.B. and J.D. McPhail. 1985. Variation in Burst and Prolonged Swimming Performance Among British Columbia Populations of Coho Salmon. Canadian Journal of Fisheries and Aquatic Sciences, Volume 42.

Thomas, A.E., J.L. Banks and D.C. Greenland. 1969. Effect of Yolk Sac Absorption on the Swimming Ability of Fall Chinook Salmon. Transactions of the American Fisheries Society 98(3):406-410

Tomljanovich, D.A., and J.H. Heuer. 1979. Protection of Fish Larvae using Fine-Mesh Screening. Presented at American Society of Engineers Convention, Atlanta, GA.

Turnpenny, A.W. 1981. An Analysis of Mesh Sizes Required for Screening Fishes at Water Intakes. Estuaries, Volume 4, No. 4

Turnpenny, A.W., H.G. Struthers, and K.P. Hanson. 1998. A UK guide to intake fish-screening regulations, policy and best practice. ETSU H/06/0052/00/00. Report to the Department of Trade and Industry, Energy Technology Support Unit, Harwell, United Kingdom.

U.S. Army Corps of Engineers (COE). 1956. North Pacific Division Corps Of Engineers, Progress Report On Fisheries Engineering Research Program, November 1956. Portland, Oregon.
Contents:

1. A Review of Studies in Guiding Downstream Migrating Salmon with Light. U.S. fish and Wildlife Service.
2. Determination of the Normal Stream Distribution, Size, Time and current Preference of Downstream Migrating Salmon and Steelhead Trout in the Columbia and Snake Rivers. State of Washington Dept. of Fisheries.
3. The Effect of Sound Waves on Young Salmon. U.S. Fish and Wildlife Service.
4. Powerhouse Collection System and Transportation Flows, Bonneville Dam. Portland District, Corps of Engineers.
5. The Status of Field Scale Electrical Fish Guiding Experiments. U.S. Fish and Wildlife Service.
6. Effect of Structures at Main Columbia River Dams on Downstream Migration of Fingerlings. Portland District, Corps of Engineers.
7. Bouyant Submerged Orifice Research. Portland District, Corps of Engineers.
8. Study of the Effect of Magnetic Fields on Salmon. U.S. Fish and Wildlife Service.
9. *Fishway* Attraction Water Supply Study. Walla Walla District, Corps of Engineers.

10. Submerged Orifice Research Powerhouse Fish Collection System, Bonneville Dam. Portland District, Corps of Engineers.
11. The Control of Downstream Migrants by Means of Mechanical Screens. Oregon Game Commission.
12. Research Relating to Mortality of Downstream Migrant Salmon Passing McNary Dam. State of Washington Department of Fisheries.
13. Research Relating to Study of Spawning Grounds in Natural Areas. State of Washington Department of Fisheries.
14. Investigation of the Rate of Passage of Salmon and Steelhead Trout through Bonneville Dam and The Dalles Dam Site as Compared to Unobstructed Sections of the Columbia River. Oregon Fish Commission.
15. Investigations and Field Studies Relating to Numbers and Seasonal Occurrence of Migratory Fish Entering the Columbia River above Bonneville and the Snake River and Their Final Distribution among Principal Tributaries Thereto. Oregon Fish Commission.
16. Enumeration Study – Upper Columbia and Snake Rivers. Idaho Department of Fish and Game.
17. Research on Fishway Problems. U.S. Fish and Wildlife Service.
18. A Study to Investigate the Effects of Fatigue and Current Velocities on Adult Salmon and Steelhead Trout. School of Fisheries, University of Washington.
19. A Study to determine the Effects of Electricity on Salmon and Steelhead Trout. School of Fisheries, University of Washington.
20. Determination of the Vertical and Horizontal Distribution of Seaward Migrants, Baker Dam. State of Washington, Department of Fisheries.
21. Guiding Downstream Migrant Salmon and Steelhead Trout. A Research Summary. School of Fisheries, University of Washington.

U.S. Army Corps of Engineers (COE). 1960. North Pacific Division Corps Of Engineers, Progress Report On Fisheries Engineering Research Program, July, 1960. Portland, Oregon.

Contents:

1. Guiding Downstream Migrant Salmon and Steelhead Trout College of Fisheries. University of Washington.
2. Results of a Tagging Program to Enumerate the Numbers and to Determine the Seasonal Occurrence of Anadromous Fish in the Snake River and its Tributaries Fish Commission of the State of Oregon.
3. Enumeration Study Upper Columbia and Snake Rivers. Idaho Department of Fish and Game.
4. Evaluation of the Ability of an Artificial Outlet to Attract Downstream Migrant Salmonids from the Reservoir of Lookout Point Dam. Fish Commission of the State of Oregon.
5. The Control of Downstream Migrants by Means of Mechanical Screens. Oregon State Game Commission.
6. Fishway Attraction Water Supply Study. Walla Walla District, Corps of Engineers.
7. Effect of Structures at Main Columbia River Dams on Downstream Migration of Fingerlings. Portland District, Corps of Engineers.

8. The Status of Electrical Fish Guiding Experiments. U.S. Fish and Wildlife Service.
9. Research Relating to McNary Supplemental Spawning Channel. State of Washington, Department of Fisheries.
10. Research on *Fishway* Problems. Bureau of Commercial Fisheries, U.S. Fish and Wildlife Service.
11. A Study to Determine the Effects of Electricity on Salmon and Steelhead Trout. College of Fisheries, University of Washington.
12. A Study to Investigate the Effects of Fatigue and Current Velocities on Adult Salmon and Steelhead Trout. College of Fisheries, University of Washington.
13. Research Relating to Mortality of Downstream Migrant Salmon Passing McNary and Big Cliffs Dams. State of Washington, Department of Fisheries.
14. Powerhouse Fish Collection System and Transportation Flow, Bonneville Dam. Portland District, Corps of Engineers.
15. Submerged Orifice Research Powerhouse Fish Collection System, Bonneville Dam. Portland District, Corps of Engineers.
16. Buoyant Submerged Orifice Research. Portland District, Corps of Engineers.
17. An Investigation of the Effect of The Dalles Dam upon Migration Rates of Adult Salmonids, 1956 and 1957. Fish Commission of the State of Oregon.
18. Experimental Studies on the survival of the Early Stages of Chinook Salmon after varying Exposures to Upper Lethal Temperatures. State of Washington, Department of Fisheries.
19. Fish Passage through Turbines. Walla Walla District, Corps of Engineers.

U.S. Army Corps of Engineers (COE). 1966. North Pacific Division Corps Of Engineers, Progress Report On Fisheries Engineering Research Program, November 1966. Portland, Oregon.

Contents:

1. Migrant Salmon Light-Guiding Studies at Columbia River Dams. Paul E. Fields.
2. Juvenile Fish Passage Through Turbines. Raymond C. Oligher.
3. Research on *Fishway* Problems, May 1960 to April 1965. Joseph R. Gauley, Charles R. Weaver, and Clark S. Thompson.
4. Fallback of Adult Chinook Salmon at Ice Harbor Dam Spillway, May 1964. James H. Johnson.
5. Review and Analysis of Fish Counts, Counting Technique and Related Data at Corps of Engineers Dams on the Columbia and Snake Rivers. Louis C. F*redd*.
6. Research Relating to McNary Supplemental Spawning Channel, Five-Year Summary, 1960 through 1964. State of Washington Department of Fisheries.
7. The Accelerated Fish Passage Research Program of the U.S. Bureau of Commercial Fisheries – Summary of Progress through 1964. Gerald B. Collins and Carl H. Elling.

U.S. Army Corps of Engineers (COE). 1972. North Pacific Division Corps Of Engineers, Fourth Progress Report On Fisheries Engineering Research Program, 1966-1972. Portland, Oregon.

Contents:

- Standardization of Spill Patterns at Ice Harbor Dam
- General Guidelines for Adjusting Spill Distributions to Improve Fish Passage with Tentative Spilling Schedule for Bonneville and John Day Dams
- Operational Studies at Dams on the Lower Columbia and Snake Rivers
- I. Operational Studies at Dams on the Lower Columbia River with a Brief Analysis of Adequacy of New Spilling Techniques at Ice Harbor Dam
- II. Fish Passage Problems at Lower Columbia River Dams in 1968 Effects of Peaking Operations on Passage of Adult Salmonids Over Columbia River Dams
- Evaluation of Upstream Passage of Adult Salmonids through the Navigation Lock at Bonneville Dam during the Summer of 1969
- A Tagging Study to Investigate the Unexplained Loss of Spring and Summer Chinook Salmon Migrating Past Bonneville and The Dalles Dam
- Indications of Loss and Delay to Adult Salmonids below Ice Harbor Dam (1962-66)
- Radio Tracking of Adult Spring Chinook Salmon below Bonneville Dam, 1971
- Sonic Tracking of Adult Steelhead in Ice Harbor Reservoir, 1969
- Sonic Tracking of Steelhead in the Ice Harbor Reservoir, 1967
- Sonic Tracking of Steelhead in the Rocky Reach Reservoir, 1967
- Evaluation of Fish Passage in the Vertical Slot Regulating Section of the South Shore Ladder at John Day Dam
- Propagation of Fall Chinook Salmon in McNary Dam Experimental Spawning Channel, 1957 through 1963
- Effect of Gas Supersaturated Columbia River Water on the Survival of Juvenile Salmonids, April-June 1972, Final Report – Part 1
- A Nitrogen (N2) Model for the Lower Columbia River
- Test of Fingerling Passage at Bonneville Dam, Report No. 1
- A Study to Determine the Value of Using the Ice-Trash Sluiceway for Passing Downstream Migrant Salmonids at Bonneville Dam
- Bonneville and The Dalles Dams Ice-Trash Sluiceway Studies, 1971
- Research on Gatewell-Sluice Method of Bypassing Downstream Migrant Fish Around Low-head Dams
- Fingerling Fish Mortalities at 57.5 fps, Report No. 1
- Fingerling Fish Research Effect of Mortality of 67-fps Velocity, Report No. 2
- Fingerling Fish Research, High-Velocity Flow through Four-Inch Nozzle, Report No. 3
- Fingerling Shad Studies at Bonneville Dam, November and December 1966
- Progress Report on Fish Protective Facilities at Little Goose Dam and Summaries of Other Studies Relating to the Various Measures Taken by the Corps of Engineers to Reduce Losses of Salmon and Steelhead in the Columbia and Snake Rivers
- A Compendium on the Survival of Fish Passing Through Spillways and Conduits
- Special Section on Stilling Basin Hydraulics and Downstream Fish Migration
- A Compendium on the Success of Passage of Small Fish Through Turbines
- Fisheries Handbook of Engineering Requirements and Biological Criteria
- Steelhead Fishing Method Study, Lake Sacajawea, Washington, Ice Harbor Reservoir
- Steelhead Fishing Project, Ice Harbor Reservoir, 1969

- Fish Passage Research at the Fisheries Engineering Research Laboratory, May 1965 to September 1970
  Studies:
  1. Behavior of Juvenile Salmonids in a Simulated Turbine-Intake
  2. Passage of Adult Salmonids through Pipes
  3. Factors Influencing the Passage of Adult Salmonids Through Channels
  4. Factors Influencing the Passage of Fish through Submerged Orifices
  5. Tests of Velocity Barriers
  6. Tests of a Model "A" Alaska Steeppass *Fish ladder*
  7. Research on Shad Passage Problems
  8. Response of Migrating Adult Salmon and Trout to Heated and Cooled Effluents and their Effect on Upstream Passage
- Survival of Fingerlings Passing through a Perforated Bulkhead and Modified Spillway at Lower Monumental Dam, April-May 1972
- Evaluation of Fish Facilities and Passage at Foster and Green Peter Dams on the South Santiam River Drainage in Oregon
- Final Report, Evaluation of Fish Passage Facilities at Cougar Dam on the South Fork McKenzie River in Oregon
- Final Report, Evaluation of Fish Facilities and Passage at Fall Creek Dam on Big Fall Creek in Oregon
- Evaluation of Fish Passage Facilities at the North Fork Project on the Clackamas River in Oregon
- Summary Report on Juvenile Downstream Migrant Fish Passage and Protection Studies at Willamette Falls, Oregon
- Hydraulic Model Studies on a Fish Guidance Screen
- Effects on Hydraulic Shearing Action on Juvenile Salmon (Summary Report)
- The Effect of Small Impoundments on the Behavior of Juvenile Anadromous Salmonids
- The Feasibility of Rearing Sockeye Salmon in Reservoirs, Final Report
- Use of a Hydroelectric Reservoir for the Rearing of Coho Salmon (Oncorhynchus kisutch)
- Effects on Low Flows Below Big Cliff Reservoir, North Santiam River, on Fish and Other Aquatic Organisms
- A Study to Identify the Race of Fall Chinook Whose Spawning Grounds will be Inundated by the John Day Impoundment on the Columbia River
- An Evaluation of the Rocky Reach Chinook Salmon Spawning Channel, 1961-1968
- Fecundity of Fall Chinook Salmon from the Upper Columbia River
- Summary Report, The Operation and Evaluation of the Carmen-Smith Spawning Channel, 1966-67
- Effect of Brownlee Reservoir on Migrations of Anadromous Salmonids

U.S. Army Corps of Engineers (COE). 1978. North Pacific Division Corps Of Engineers, Fifth Progress Report On Fisheries Engineering Research Program1973-1978 . Portland, Oregon.

Contents:

- Radio Tracking Studies of Chinook Salmon and Steelhead to Determine Specific Areas of Loss between Dams
- Studies of the Relationships between Adult Fish Passage and Powerhouse Operations
- Radio-Tracking Studies to Determine the Effects of Peaking on Adult Chinook Salmon and Steelhead
- Radio-Tracking Studies Relating to Fallback at Hydroelectric Dams on the Columbia and Snake Rivers
- Passage Problems of Adult Columbia River Chinook Salmon and Steelhead
- Adult Fish Exposed to a High Velocity Jet
- Radio-Tracking Studies to Determine the Effects of Spillway Deflectors on Adult Salmonids
- The Effects of Altered Flow Regimes, Temperatures, and River Impoundment on Adult Steelhead Trout and Chinook Salmon
- Effects of Reduced Nighttime Flows on Upstream Migration of Adult Chinook Salmon and Steelhead Trout in the Lower Snake River
- Effects of Power Peaking on the Indian Fishery
- Adjusting Spill Distributions to Improve Fish Passage at Corps Dams
- John Day Powerhouse Adult Fish Collection System Studies
- The Dalles Dam Powerhouse Adult Fish Collection System Studies
- Vertical Slot *Fishway* Evaluation at Bonneville Dam
- Evaluation of the Adult Salmonid Trap Installed in the Bradford Island "A" Branch *Fish ladder*, Bonneville Dam
- Studies on Adult Fish Passage over "A" Branch of Bradford Island Fishery at Bonneville Dam
- Bonneville 1st Powerhouse Adult Fish Collection System Studies
- Side Entrance *Fishway* Studies
- Evaluation of Methods for Handling and Artificially Propagating Summer Chinook Salmon
- Ice Harbor Fall Chinook Trapping, 1978
- Effects of Power Peaking on Survival of Juvenile Fish at Lower Columbia and Snake River Dams
- Study of Turbine Operations under Peaking and High River Flow Conditions to Obtain Maximum Fish Passage Survival and Updated 1967 May Compendium
- Fish Passage through Turbines: Tests at Big Cliff Dam
- Effects of Dam Operations and Flow Regulation on Juvenile Salmon and Steelhead Migrations in the Snake and Columbia Rivers
- Effects of Peaking (Stranding) of Columbia River Dams on Juvenile Anadromous Fishes below The Dalles Dam
- Improving the Fingerling Protection System for Low-Head Dams

- Evaluation and Development of the Ice-Trash Sluiceway at The Dalles Dam as a Downstream Migrant Bypass
- Fingerling Passage at Bonneville Powerhouse
- Ejection of Fingerling in High-Velocity Jet
- Fingerling Passage through John Day Spillway
- Effect of Spillway Bucket Roughness on Fingerling
- Transportation of *Smolt*s and Related Studies in the Snake and Columbia Rivers
- Evaluation of the Fingerling *Bypass system* Outfalls at McNary and John Day Dams
- Effects of Atmospheric Gas Supersaturation on Survival of Fish and Evaluation of Proposed Solutions
- Nitrogen Reduction, Fish Barge Water Supply
- Slotted Bulkheads for Skeleton Power Units
- Spillway Deflectors to Reduce Buildup of Nitrogen Saturation
- Equilibrium with Packed Column Degassor
- Feasibility of Using Siphons for Degassing Water
- Special Drought Year Operation for Downstream Fish Migrants

U.S. Army Corps of Engineers (COE). 1983. North Pacific Division Corps Of Engineers, Sixth Progress Report On Fisheries Engineering Research Program,1979-1983. Portland, Oregon.

Contents:

<u>Adult Anadromous Salmonid Passage Effectiveness Research</u>

1. The John Day Powerhouse Adult Fish Collection System
2. Evaluations – 1979-1980
3. Evaluation of Adult Fish Passage At Little Goose and Lower Granite Dams – 1981.
4. Evaluations of Adult Fish Passage At Ice Harbor and Lower Monumental Dams – 1982.
5. Evaluation of Adult Fish Passage At Bonneville Dam 1982.
6. Adult Salmonid Delay at John Day Dam – 1982-1983.

<u>Effects of River Flow and Spill On Juvenile Anadromous Salmonid Migrations.</u>

1. Migrational Characteristics of Juvenile Salmon and Steelhead in the Columbia River System – 1979-1983.
2. Migration Patterns of Salmonid *Smolt*s in the John Day Dam *Forebay*.
3. Hydroacoustic Monitoring of Downstream Migrant Juvenile Salmonids at John Day Dam – 1981.
4. Hydroacoustic Monitoring of Downstream Migrant Juvenile Salmonids at John Day and The Dalles Dam – 1982.
5. Updated Compendium on the Success of Passage of Small Fish Through Turbines

Juvenile Salmonid Transportation

1. Evaluation of Juvenile Fish Transportation and Related Research – 1979-1983.
2. Evaluating the Effects of Stress on the Viability of Chinook Salmon *Smolt*s Transported from the Snake River to the Columbia River Estuary – 1983.
3. Juvenile Salmonid Transport Operations – 1981-1983.

Juvenile Salmonid Bypass Efficiency

1. Research to Develop Passive Bar Screens for Guiding Juvenile Salmonids out of Turbine Intakes at Lower Head Dams on the Columbia and Snake River – 1979.
2. Evaluation of Submersible Traveling Screens, Cycling of Gatewells Orifice Operations, and the Ice-Trash Sluiceway System for Juvenile Fish Protection at the Bonneville First Powerhouse – 1981.
3. Research to Develop an Improved Fingerling Protection System for John Day Dam – 1981-1982.
4. Research to Develop an Improved Fingerling Protection System for Lower Granite Dam – 1981-1983.
5. Effects of the Intermittent Operation of Submersible Traveling Screens on Juvenile Salmonids – 1982.
6. Evaluation of the Juvenile Collection and *Bypass system* at Bonneville Dam – 1983.
7. Research to Develop The Dalles Dam Ice and Trash Sluiceway as a Juvenile Fish *Bypass system* – 1979-1981.
8. Operating Criteria for the Bonneville Dam Ice and Trash Sluiceway when Operated as a *Smolt* Bypass – 1979-1981.
9. A Hydroacoustic Evaluation of Downstream Migrating Salmonids at Ice Harbor Dam – 1982-1983.

U.S. Army Corps of Engineers (COE). 1984. North Pacific Division Corps Of Engineers. Sixth Progress Report, Fish Passage Development and Evaluation Program. Portland, Oregon.

Contents:

1. Evaluations of Adult Fish Passage at Bonneville Lock and Dam and John Day Dam. D.M. Shew, Corps of Engineers, Portland District.
1. Adult Salmonid Delay at John Day Dam (1984). D.M. Damkaer and D.B. Dey.
2. Evaluation of Transportation of Juvenile Salmonids and Related Research on the Columbia and Snake, 1984. G.M. Mathews and D.L. Park, National Marine Fisheries Service.
3. Survival of Chinook Salmon *Smolt*s Passing Dams and Entering Seawater as Related to Stress Level and *Smolt* Quality. T.C. Bjornn et al, Idaho Cooperative Fishery Research Unit.
4. Columbia River Salmonid Outmigration: McNary Dam Passage and Enhanced *Smolt* Quality. C.B. Schreck and H.W. Li, Oregon Cooperative Fish Research Unit.

5. Evaluation of the Juvenile Collection and *Bypass system*s at Bonneville Dam, 1984. Krcma et al, National Marine Fisheries Service.
6. Fish Guiding and Orifice Passage Efficiency Tests with Subyearling Chinook Salmon, McNary Dam, 1984. G.A. Swan and R.F. Krcma, National Marine Fisheries Service.
7. Development of an Improved Fingerling Protection System for Lower Granite Dam, 1984. G.A. Swan and R.F. Krcma.

U.S. Army Corps of Engineers (COE). 1993. North Pacific Division Corps Of Engineers. Seventh Progress Report, Fish Passage Development and Evaluation Program 1984-1990. Portland, Oregon.

Contents:

Annual Progress Report 1985

1. Evaluation of The Juvenile Collection and *Bypass system*s at Bonneville Dam – 1985. M. Gessel et al.
2. Studies to Evaluate Alternative Methods of Bypassing Juvenile Fish at The Dalles Dam – 1985. B. Monk et al.
3. Evaluation of The Rehabilitated Juvenile Fish Collection and Passage System at John Day Dam – 1985. R. Krcma et al.
4. Evaluation of Transportation of Juvenile Salmonids – 1985. D. Park and G. Matthews.
5. Continuing Studies to Improve and Evaluate Juvenile Fish Collection at Lower Granite Dam – 1985. G. Swan and R Krcma.
6. Hydroacoustic Evaluation of Fish Collection Efficiency at Lower Granite Dam in Spring 1985. S. Kuehl and L. Johnson.
7. Survival of Chinook Salmon *Smolt*s Passing Dams and Entering Seawater as Related to Stress Level and *Smolt* Quality. Idaho Cooperative Fish and Wildlife Research Unit.
8. Evaluation of Adult Fish Passage at McNary Dam and John Day Dam. R. Peters et al.
9. Response of Chinook Salmon and Steelhead Trout *Smolt*s to Three Flumes Tested at Lower Granite Dam, 1985. J. Congleton and R. Ringe.

Annual Progress Report 1986

1. Evaluation of the juvenile collection and *bypass system*s at Bonneville Dam – 1986. M Gessel et al.
2. Studies to evaluate alternative methods of bypassing juvenile salmonids at The Dalles Dam – 1986. B. Monk et al.
3. Evaluation of the rehabilitated juvenile fish collection and passage system at John Day Dam – 1986. D. Brege et al.
4. Research to improve subyearling chinook salmon fish guiding efficiency at McNary Dam – 1986. G. Swan and W. Norman.

5. Determine fish guiding efficiency of submersible traveling screens at Lower Monumental Dam – 1986. R. Ledgerwood.
6. Initial study to evaluate existing juvenile fish collection at Little Goose Dam – 1986 G. Swan et al.
7. Hydroacoustic evaluation of fish guiding efficiency at Little Goose Dam – 1986. Parametrix, Inc. and Associated Fisheries Biologists, Inc.
8. Evaluation of juvenile salmonid passage through the *bypass system*, turbine, and spillway at Lower Granite Dam – 1986. D. Park and S. Achord.
9. Evaluation of transportation of juvenile salmonids – 1986. G. Matthews and D. Park.
10. Survival of chinook salmon *smolt*s with stress levels similar to those encountered at dams – 1986. T. Bjornn, and J. Congleton.

Annual Progress Report 1987

1. Evaluation of juvenile salmonid survival through the second powerhouse turbines and downstream migrant *bypass system* at Bonneville Dam. E. Dawley et al.
2. Continuing studies to improve the *bypass system* at Bonneville Dam. M. Gessel et al.
3. Bonneville Dam Second Powerhouse fish guidance research; velocity mapping studies. A. Jensen.
4. Hydroacoustic monitoring at Bonneville Second sluice chute and powerhouse. R. Magne.
5. Research at McNary Dam to improve fish guiding efficiency of yearling and subyearling chinook salmon. D. Brege et al.
6. Evaluate the prototype juvenile *bypass system* at Ice Harbor Dam. D. Brege et al.
7. Hydroacoustic assessment of sluiceway effectiveness at Ice Harbor Dam. Biosonics, Inc.
8. Fish guiding efficiency of submersible traveling screens at Lower Granite and Little Goose Dams. R. Ledgerwood et al.
9. Behavior and physiology studies in relation to yearling chinook salmon guidance at Lower Granite and Little Dams. W. Muir et al.
10. Evaluate improved collection, handling, and transport techniques designed to increase survival of juvenile salmon and steelhead. G. Matthews.
11. Survival of chinook salmon *smolt*s with stress levels encountered at dams. T. Bjornn.

Annual Research Report 1988

1. Update on A Compendium of the Success of Passage of Small Fish Through Turbines. M. Bell.
2. Update on Fisheries Handbook of Engineering Requirements and Biological Criteria. M. Bell.
3. Continuing studies to improve the juvenile *bypass system* at Bonneville Dam. M. Gessel et al.
4. Hydroacoustic development at Bonneville First Powerhouse. Biosonics, Inc.

5. Evaluation of juvenile salmonid survival through downstream migrant *bypass system*s, spillways, and turbines at Bonneville Dam. E. Dawley.
6. Survival of chinook salmon *smolt*s with stress levels encountered at dams. T. Bjornn.
7. Evaluate improved collection, handling, and transport techniques designed to increase survival of juvenile salmon and steelhead. J. Harmon et al.
8. Evaluate causes for decreased survival of transported spring chinook salmon from Lower Granite Dam. R. Pascho and D. Elliott.
9. Hydroacoustic monitoring at Bonneville Second Powerhouse. R. Magne.
10. Measurement of low frequency sound at Bonneville, McNary, and Lower Granite Dams. J. Anderson et al.
11. An assessment of the relationship between *smolt* development and FGE at Bonneville Dam. A. Giorgi et al.

Annual Research Report 1989

1. Continuing studies to improve and evaluate the juvenile *bypass system*s at Bonneville Dam. M. Gessel.
2. Evaluation of juvenile salmonid survival through downstream migrant *bypass system*s, spillways, and turbines at Bonneville Dam. E. Dawley.
3. Hydroacoustics and video monitoring at the Bonneville Dam Second Powerhouse. R. Magne.
4. Continuing studies to improve and evaluate juvenile fish collection at Lower Granite Dam. J. Williams et al.
5. Survival of chinook salmon *smolt*s with stress levels encountered at Dams. T. Bjornn.
6. Evaluate improved collection, handling, and transport techniques designed to increase survival of juvenile salmon and steelhead. G. Matthews.
7. Impact of bacterial kidney disease on survival of spring/summer chinook salmon stocks. R. Pascho and D. Elliott.
8. Hydroacoustic evaluation of fish behavioral response to fixed bar screens at Lower Granite Dam. Biosonics, Inc.
9. Literature review and design criteria of behavioral fish guidance systems. J. Anderson and B. Feist.

U.S.D.A., Forest Service, 1999. Water Road Interaction Series.

U.S. Fish and Wildlife Service. 1983-19__. Species Profiles: Life Histories and Environmental Requirements of Coastal Fishes and Invertebrates. U.S. Fish Wildlife Service, Biol. Rep.82(11). U.S. Army Corps of Engineers, TR EL-82-4.

Vinsonhaler R. and D. Sutherland. 1964. Exploratory Tests of Velocity Selection as a Means of Guiding Juvenile Fish. Fish Passage Research Program, U.S. Bureau of Commercial Fisheries, Seattle, WA.

Vogel, D.A., K.R. Marine and J.G. Smith. 1990 or 1988. A Summary of Upstream and Downstream Anadromous Salmonid Passage at Red Bluff Diversion Dam on the Sacramento River, California, U.S.A.. In: Proceedings of the International Symposium on *fishway*s '90 in Gifu. Gifu, Japan.

Waples, R.S. 1991. Definition of "Species" under the ESA: Application to Pacific Salmon. U.S. Dep. Commer., NOAA Tech. Memo., NMFS, F/NWC-194, 29 pages.

Washington Department of Fish and Wildlife, 2000a. *Fishway* Guidelines for Washington State - Draft Report, K. Bates. Olympia, WA. 57 pp.

Washington Department of Fish and Wildlife, 2000b. Fish Protection Screen Guidelines for Washington State - Draft Report. B. Nordlund, K. Bates. Olympia, WA 53 pp.

Washington Department of Fish and Wildlife, 2003. Design of Road Culverts for Fish Passage, K. Bates, B. Barnard, B. Heiner, J.P. Klavas, P.Powers and P. Smith, Olympia, WA 110 pp.

Washington State Department of Transportation. 1998. Juvenile and Resident Salmonid Movement and Passage Through Culverts. Final Report. Rept. No. WA-RD 457.1.
(Available through the National Technical Information Service, Springfield, VA 22616).

Washington State Department of Transportation. 1997. Fish Passage Program Department of
Transportation Inventory Final Report. G. Johnson (Project Leader) and nine others. 58 pages.

Washington State Department of Transportation. 1996. Investigation of Culvert Hydraulics Related to Juvenile Fish Passage. Final Report. Rept. No. WA-RD 388.1. (Available through the National Technical Information Service, Springfield, VA 22616)

Weaver, W.E., and D.K. Hagans. 1994. Handbook for Forest and Ranch Roads. Mendocino County Resource Conservation District. 161 pages.

Webb, P.W. 1978. Fast Start Performance and Body Form in Seven Species of Teleost Fish. Journal of Experimental Biology 74:211-226, Ann Arbor, MI.

Weitkamp, D.E. 1997. Designing a Fish Bypass to Minimize Predation Downstream of Dams. In Hydro Review, Volume XVI, No. 4, pp. 120-127August 1997

Wietkamp, L.A., T.C. Wainwright, G.J. Bryant, G.B. Milner, D.J. Teel, R.G. Kope, and R.S.

Waples. 1995. Status Review of Coho Salmon from Washington, Oregon, and California.

U.S. Dep. Commer., NOAA Tech. Memo., NMFS-NWFSC-24, Northwest Fisheries Science Center, Seattle, Washington. 258 pages.

Whitney, R., L. Calvin, M. Erho, and C. Coutant. 1997. Downstream passage for salmon at hydroelectric projects in the Columbia River basin: development, installation, and evaluation. ISAB 97-15. Northwest Power Planning Council, Portland, OR.

Ziemer, G.L. 1961. Fish Transport in Waterways. Alaska Dept. of Fish and Game. 2 pages.