NOAA Technical Report NOS 82 NGS 13

Feasibility Study of the Conjugate Gradient Method for Solving Large Sparse Equation Sets

Rockville, Md.
February 1980

U.S. DEPARTMENT OF COMMERCE
National Oceanic and Atmospheric Administration
National Ocean Survey

NOAA Technical Publications

National Ocean Survey/National Geodetic Survey subseries

The National Geodetic Survey (NGS) of the National Ocean Survey (NOS), NOAA, establishes and maintains the basic National horizontal and vertical networks of geodetic control and provides governmentwide leadership in the improvement of geodetic surveying methods and instrumentation, coordinates operations to assure network development, and provides specifications and criteria for survey operations by Federal, State, and other agencies.

NGS engages in research and development for the improvement of knowledge of the figure of the Earth and its gravity field, and has the responsibility to procure geodetic data from all sources, process these data, and make them generally available to users through a central data base.

NOAA Technical Memorandums and some special NOAA publications are sold by the National Technical Information Service (NTIS) in paper copy and microfiche. Orders should be directed to NTIS, 5285 Port Royal Road, Springfield, VA 22161 (telephone: 703-557-4650). NTIS customer charge accounts are invited; some commercial charge accounts are accepted. When ordering, give the NTIS accession number (which begins with PB) shown in parentheses in the following citations.

Paper copies of NOAA Technical Reports that are of general interest to the public, are sold by the Superintendent of Documents, U.S. Government Printing Office (GPO), Washington, DC 20402 (telephone: 202-783-3238). For prompt service, please furnish the GPO stock number with your order. If a citation does not carry this number, then the publication is not sold by GPO. All NOAA Technical Reports may be purchased from NTIS in hard copy and microform. Prices for the same publication may vary between the two Government sales agents. Although both are nonprofit, GPO relies on some Federal support whereas NTIS is self-sustained.

An excellent reference source for Government publications is the National Depository Library program, a network of about 1,300 designated libraries. Requests for borrowing Depository Library material may be made through your local library. A free listing of libraries currently in this system is available from the Library Division, U.S. Government Printing Office, 5236 Eisenhower Ave., Alexandria, VA 22304 (telephone: 703-557-9013).

NOAA geodetic publications

Classification, Standards of Accuracy, and General Specifications of Geodetic Control Surveys. Federal Geodetic Control Committee, John O. Phillips (Chairman), Department of Commerce, NOAA, NOS, 1974 reprinted annually, 12 pp (PB265442). National specifications and tables show the closures required and tolerances permitted for first-, second-, and third-order geodetic control surveys. (A single free copy can be obtained, upon request, from the National Geodetic Survey, C18x2, NOS/NOAA, Rockville MD 20852.)

Specifications To Support Classification, Standards of Accuracy, and General Specifications of Geodetic Control Surveys. Federal Geodetic Control Committee, John O. Phillips (Chairman), Department of Commerce, NOAA, NOS, 1975, reprinted annually, 30 pp (PB261037). This publication provides the rationale behind the original publication, "Classification, Standards of Accuracy, ..." cited above. (A single free copy can be otained, upon request, from the National Geodetic Survey, C18x2, NOS/NOAA, Rockville MD 20852.)

Proceedings of the Second International Symposium on Problems Related to the Redefinition of North American Geodetic Networks. Sponsored by U.S. Department of Commerce; Department of Energy, Mines and Resources (Canada); and Danish Geodetic Institute; Arlington, Va., 1978, 658 pp. (GPO #003-017-0426-1). Fifty-four papers present the progress of the new adjustment of the North American Datum at midpoint, including reports by participating nations, software descriptions, and theoretical considerations.

NOAA Technical Memorandums, NOS/NGS subseries

NOS NGS-1 Use of climatological and meteorological data in the planning and execution of National Geodetic Survey field operations. Robert J. Leffler, December 1975, 30 pp (PB249677). Availability, pertinence, uses, and procedures for using climatological and meteorological data are discussed as applicable to NGS field operations.

NOS NGS-2 Final report on responses to geodetic data questionnaire. John F. Spencer, Jr., March 1976, 39 pp (PB254641). Responses (20%) to a geodetic data questionnaire, mailed to 36,000 U.S. land surveyors, are analyzed for projecting future geodetic data needs.

(Continued at end of publication)

NOAA Technical Report NOS 82 NGS 13

Feasibility Study of the Conjugate Gradient Method for Solving Large Sparse Equation Sets

Lothar Gründig

National Geodetic Survey
Rockville, Md.
February 1980

U.S. DEPARTMENT OF COMMERCE
Philip M. Klutznick, Secretary

National Oceanic and Atmospheric Administration
Richard A. Frank, Administrator

National Ocean Survey
Herbert R. Lippold, Jr., Director

CONTENTS

Abstract 1

Introduction 1

Conjugate gradient method 3

Scaling and preconditioning 5

Programs 8

Experimental results 12

Discussion of the results 13

Application 16

Acknowledgments 18

References 18

Mention of a commercial company or product does not constitute an endorsement by NOAA National Ocean Survey. Use for publicity or advertising purposes of information from this publication concerning proprietary products or the tests of such products is not authorized.

FEASIBILITY STUDY OF THE CONJUGATE GRADIENT METHOD FOR SOLVING LARGE SPARSE EQUATION SETS

Lothar Gründig[1]
National Geodetic Survey
National Ocean Survey, NOAA
Rockville, Md. 20852

ABSTRACT. A feasibility study was performed to determine the effectiveness of various conjugate gradient methods for solving large sparse equation sets. Equations of this magnitude will be involved in the future new adjustment of the North American Datum. The conjugate gradient method provides a suitable algorithm for this purpose. Some typical nets associated with the new adjustment were used and compared with a direct solution algorithm. Results indicate that this method is well suited for constrained adjustments of triangulation networks, but not for free adjustments. No benefits were derived from preconditioning, which only increased the solution time.

INTRODUCTION

Since its development by Hestines and Stiefel (1952), many reports have been published on the method of conjugate gradients. Initially, the method was touted as a possibly superior means for solving nonsparse systems of linear equations, but these claims were later discredited by an abundance of contrary evidence. When applied to sparse systems of equations, however, the results appear more promising. In fact, recent literature on numerical analysis (Barker 1977) refers to it as a useful method for problems involving partial differential equations.

Hilger (1966), Schwarz (1970), Dufour (1974), Saxena (1972), Gründig and Linkwitz (1975), and others have used various versions of the conjugate

---

[1]This study was performed at the National Oceanic and Atmospheric Administration, Rockville, Md., in 1977, while the author was on sabbatical leave from the University of Stuttgart. Permanent address: Institute for Application of Geodesy to Construction, University of Stuttgart, 7000 Stuttgart 1, Federal Republic of Germany.

gradient algorithm to solve geodetic normal equations. The number of iterations varied with the complexity of the problem. Hilger and Saxena needed more than "n" iterations with n unknowns for certain problems, while Gründig and Linkwitz used far fewer iterations to achieve a desired accuracy. Schek et al. (1976) compared the conjugate gradient method with a direct sparse matrix algorithm and found the direct algorithm superior for special geodetic networks requiring n/2 iterations for solution by the conjugate gradient method.

To be competitive with highly developed direct solution algorithms, the conjugate gradient method must converge more rapidly and the number of iterations must not increase significantly with the number of unknowns. These qualities were exhibited during the adjustment of geodetic trilateration and leveling networks and those networks established by interconnected transformation. The solution of 6,000 equations, to a given accuracy, can be obtained in only 60 iterations (Gründig and Linkwitz 1975). Other examples showed a similar pattern of convergence.

The following questions arise: Is it possible to obtain fast convergence for more general types of geodetic networks? If not, what mathematical technique could be used to improve convergence for a given type of network?

In applying the conjugate gradient method to the adjustment of different data samples taken from the U.S. horizontal control network, the method's applicability was tested for solving the extremely large equation sets associated with the new adjustment of the North American Datum (NAD).

The method is first described using a geometric interpretation. The processes of scaling and preconditioning to improve convergence are explained and a practical implementation is given for adjusting large geodetic networks. Some experimental test results follow. Finally, the possibility of applying this method to extremely large networks is considered.

CONJUGATE GRADIENT METHOD

Every system of linear equations can be regarded as an extremum of a quadratic function. The first derivative of the function that forms the equation system must be zero. If the function is convex, the solution vector corresponds to the minimum of the function.

The following formula applies with matrix N and the vectors x, r, p:

$$f(x) = x^t Nx - 2 x^t r + \text{const.} \tag{1}$$

$$\frac{\partial f}{\partial x} = Nx - r = 0. \tag{2}$$

Equation (1) can be regarded as a family of concentric ellipsoids. If we assume the solution x to be the center of the ellipsoids, the function is

$$f(x) = x^t Nx - 2x^t r + r^t N^{-1} r. \tag{3}$$

The conjugate gradient method minimizes (3) in a stepwise manner. It searches for the center of the ellipsoid by following conjugate directions of the ellipsoid. The following formulas result:

$$\begin{aligned} x_i &= x_{i-1} + \alpha_i \; p_i \\ r_{i+1} &= r_i - \alpha_i N \; p_i \\ p_{i+1} &= r_{i+1} + \beta_i \; p_i . \end{aligned} \tag{4}$$

In each step, function (3) is minimized along one conjugate direction. Each local minimum is also a new approximation of the global minimum of the function because (3) represents a convex quadratic form. The conjugate directions of descent are constructed from the gradient at each new minimum reached in the descent sequence. Because each n-dimensional ellipsoid has only n different sets of conjugate directions, the solution will theoretically be achieved in n steps.

The minimum condition min $f(\alpha_i)$ = min $(r_{i+1}^T N^{-1} r_{i+1})$ leads to

$$\alpha_i = \frac{r_i^t r_i}{p_i^t N p_i} . \tag{5}$$

By using the attribute of conjugacy, $p_i^t N p_j = 0$, for $i \neq j$, and the relation, $r_j^t p_i = 0$, for $j > i$, then β_i can be obtained from (4) and (5) as:

$$\beta_i = \frac{r_{i+1}^t r_{i+1}}{r_i^t r_i} . \tag{6}$$

The third attribute, orthogonality of the residuals $r_i r_j^t = 0$, for $i \neq j$, follows.

The quadratic function (3) decreases monotonically with each step, while the solution vector increases monotonically. Therefore, the solution is possible in less than n steps. The number of iterations that are theoretically necessary equals the number of distinct nonzero eigenvalues of N in the absence of rounding errors.

If we substitute A for N in the preceding formulas, where A is a matrix of observation equations, a conjugate gradient algorithm is derived that avoids explicit formulation of the normal matrix, $N = A^t A$.

With nonpositive definite matrices N, the algorithm may not converge to the solution because (3) is not strictly convex. If rank (N) < n in a least-squares problem, the method leads to the Moore-Penrose inverse solution, $x = A^t r$, if r belongs to the same subspace as A (Björck 1976).

The greatest amount of work required to apply the conjugate gradient method is one multiplication of the matrix N with a vector p_i per iteration, or twice the multiplication of A (or A^t) with a vector. The additional scalar products and scalar-times-vector products are less time-consuming. The matrix remains unchanged during the solution process, making this method especially suited for sparse systems of equations.

Several versions of the conjugate gradient method and some methods of conjugate directions choose different functions to minimize, for example, r^tNr, r^tr, etc. However, for these alternatives each iteration usually involves more work. The experiences of Reid (1971) and Elfving (1975) with alternate methods show no significant improvement in the rate of convergence, in spite of the additional work required. The algorithm consisting of eqs. (4), (5), and (6) is more direct than all the other methods considered.

SCALING AND PRECONDITIONING

A basic prerequisite for rapid convergence of the conjugate gradient method is a well-conditioned matrix. In an ill-conditioned system, the ellipsoid described by the quadratic function becomes compressed and the minimum point is not well-defined. The normals along the surface of the ellipsoid are nearly coplanar, causing slow convergence and limiting the method's practical value. Because the number of digits available is limited, rounding errors occur with each numerical operation. Digits are lost when large numbers are added to small numbers, especially when calculating scalar products. This may be caused by large differences in the scale of unknowns.

One way to reduce the effect of roundoff errors is to perform the calculations with double precision. This remedy, however, is still limited by the maximum precision available on a given computer. A better approach would be to try and change the shape of the quadratic function.

If the axes of the ellipsoid are nearly coincident with the coordinate axes, the desired improvement could be achieved by scaling them to equal size, as shown in figure 1, for two dimensions.

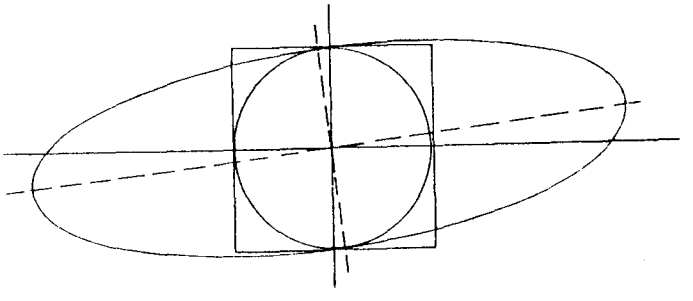

Figure 1.--A more desirable quadratic function is achieved by scaling the axes of the ellipsoid to equal size.

The system of equations is changed in such a way that all new diagonal elements are equal to 1. The scaling is done by pre- and postmultiplication of the normal matrix with a diagonal matrix that contains scaling factors. Scaling matrices are used in the following manner. Instead of

$$Nx = r,$$

the system

$$DND\bar{x} = Dr \quad (x = D\bar{x}) \tag{7}$$

is solved with $D_{ii} = 1/\sqrt{N_{ii}}$.

Scaling has a very positive effect on the convergence of gradient methods if the "flatness" of the quadratic function is caused by different magnitudes of the unknowns. When different kinds of observations are adjusted in a network, scaling may reduce the number of iterations by a factor of 30 (Gründig 1976).

By solving the observation equations directly, scaling can be performed by changing all columns of the coefficient matrix A to equal Euclidean norm.

The scaled scalar product, r^tD^tDr, is a better measure of convergence than r^tr, which may be disturbed by some extremely large coefficients. With some test adjustments, r^tr failed to converge while r^tD^tDr showed a decrease.

If the quadratic function represents a compressed ellipsoid inclined toward the coordinate axes, scaling with diagonal matrices will not be effective in improving the shape of the ellipsoid. In this case, scaling will only reduce the ellipsoid within an n-dimensional cube. The condition number may still be too large. To improve convergence, we require a matrix with the smallest possible condition number.

Preconditioning methods that use triangular matrices instead of diagonal matrices could be chosen. The best effect can be achieved by selecting the Cholesky factor L^{-1} of $N = LL^t$. The system $L^{-1}(LL^t)\ (L^{-1})^t\bar{x} = L^{-1}r$ describes the minimum of a spherical function. This minimum can be achieved in one iteration, but this system is not practical for very large sets of linear equations.

Evans (1973) and Axelsson (1974) proposed another way to reduce the condition number. They expressed the normal matrix as

$$N = I - L - L^t \qquad \text{and} \qquad D = (I - \omega L)^{-1}.$$

The application of this matrix leads to an easily solved system with the condition of the resultant system being less than its original value. Instead of $Nx = r$, the system

$$D^{-1} N(D^{-1})^t \bar{x} = D^{-1} r, \qquad \text{with} \qquad x = (D^{-1})^t \bar{x},$$

which has a positive definite coefficient matrix, is solved. The D matrix is lower triangular. The factor ω has an optimal value between 0 and 2. The modified normal matrix is not explicity formed.

The application of preconditioning to solve $N_x = r_o$ by the method of conjugate gradients is shown in the following algorithm:

$$\bar{r}_o = D^{-1} r_o,\ p_1 = (D^{-1})^t \bar{r}_o,\quad \gamma_1 = \bar{r}_o^{\,t} \bar{r}_o,\ x_o = 0,\ i = 0$$

$$\begin{array}{ll}
 & \alpha_i = p_i^t N p_i \\
 & t_i = N p_i \\
 & \boxed{t_i = D^{-1} t_i} \\
 & \beta_i = \gamma_i / \alpha_i \\
i = i+1 & x_i = x_{i-1} + \beta_i p_i \\
 & \bar{r}_i = \bar{r}_{i-1} - \beta_i t_i \\
 & \delta_i = \bar{r}_i^{\,t} \bar{r}_i \\
 & \varepsilon_i = \delta_i / \gamma_i \\
 & \gamma_{i+1} = \delta_i \\
 & \boxed{t_i = (D^{-1})^t \bar{r}_i} \\
 & p_{i+1} = t_i + \varepsilon_i p_i
\end{array} \qquad (8)$$

$\gamma_i < \gamma_{min}$

In addition to the original amount of work involved, the products $D^{-1}t_i$ and $(D^{-1})^t\bar{r}_i$ have to be formed. Because of the triangular structure of D, $D^{-1}t_i$ requires essentially one forward solution process with the original lower part of the normal matrix, and $(D^{-1})^t\bar{r}_i$ is a back substitution process. Half of the normal matrix is involved in both processes. Therfore, one iteration of this algorithm actually needs double the amount of work as the version without preconditioning.

PROGRAMS

Computational Tasks

To test the conjugate gradient algorithm, representative data were chosen from the U.S. horizontal control network. Various survey types occurring within the network were included in the study (i.e., high precision traverse, triangulation chains, and area nets). Special emphasis was placed on triangulation because of its dominant role in the national networks. In determining the 1983 North American Datum, all interconnected nets will be simultaneously adjusted, resulting in an extremely large system of equations. This enormous size, together with the sparseness of the associated system of equations, makes this project ideally suited as a practical test of conjugate gradients.

To adjust the U.S. geodetic networks by means of conjugate gradients, the following question must be answered: Should the algorithm be used to solve observation equations or "reduced" normal equations (pre-eliminated orientation unknowns)?

Using the algorithm for observation equations results in large numbers of unknowns for the triangulation networks. Each station may have several abstracts of directions that require the solution of orientation unknowns in the algorithm. Using the algorithm for reduced normal equations may involve a large number of nonzero elements that must be handled in each iteration.

The final choice depends on the following: (1) the number of nonzero elements in the matrix of observation equations and the normal matrix, (2) the effort in forming the normal equations, and especially (3) the convergence of both systems. Some experiments performed by Gründig (1976) showed almost no difference in the number of iterations between the algorithms for observation equations and nonreduced normal equations.

Another problem is the necessity of applying preconditioning to solve normal equations. Does preconditioning improve the convergence of ill-conditioned equation systems enough to justify the extra work?

To answer both questions, two computer programs were written. One applied the conjugate gradient method to original observation equations (a program called G), and the other to reduced normal equations (program G-NORM). The preconditioning methods were tested by using G-NORM.

Program G

Program G was interfaced with a prototype of the NAD adjustment system (Dillinger 1978, Hanson 1978, and Isner 1978). Interface was through a RESTART file which constitutes the data of the NAD adjustment system. Observations are retrieved from the file and results are stored in the same file. G performs a single outer iteration, requiring further inner iterations to solve the linear system. Multiple outer iterations are obtained by performing several executions of G. Program G contains the following routines:

SETUPA
WIDER
LOES
UPDATE.

SETUPA retrieves observations from the RESTART file and forms the coefficients of the observation equations, considers individual weights, and stores the data in blocks of 1,000 equations on a scratch disk.

Each observation equation, $v_m = a_1x_i + a_2y_i + a_3x_j + a_4y_j - \omega_k - l_m$, with the weight p_m, is represented by the set of parameters m, where:

$$m: \quad a_1, a_2, a_3, a_4, - p_m, l_m, i, j, k.$$

WIDER calculates the right-hand side of the normal equations, using elements of A and storing the results in a residual vector r. It also calculates the diagonal elements of the normal equations, stores the scaling factors in a vector s, and forms scaled observation equations (columns with norm 1) and a scaled residual vector.

LOES solves the system of equations by using algorithms (4), (5), and (6). The program reduces the scaled norm of the residuals by 10^6 and does not allow more than n iterations with n unknowns.

UPDATE updates the RESTART file in the manner described.

The total amount of storage is determined by three vectors of length n plus a 9,000 words maximum (buffer for 1,000 observation equations). Considering 130,000 words as an upper bound on the CDC 6600 computer, systems with up to 30,000 unknowns can be handled. By reducing the vectors in core to two (which would affect the I/O time only slightly), up to 45,000 unknowns can be accommodated.

The number of operations (multiplications) per iteration is 11 m + 5 n with m observations and n unknowns. This is the quantity that must be compared with the number required for reduced normal equations.

Program G-NORM

This program uses as input the reduced normal equations formed by the NAD adjustment system and stored in HERESI records on the RESTART file created by the system. By extracting connectivity information from the RESTART file, the normal equations' zero-nonzero structure is derived and

stored in two index vectors, IA and JA. For optimal use of the stored information, the data structure shown in the following example was selected.

$$N = \begin{bmatrix} 5. & 1. & 0. & 4. \\ & 4. & 2. & 3. \\ & & 3. & 0. \\ \text{symmetric} & & & 6. \end{bmatrix}$$

IA (1, 3, 5, 8)

JA (1, 1, 2, 2, 3, 1, 2, 4)

AN (5., 1., 4., 2., 3., 4., 3., 6.) .

IA contains the positions in AN of the diagonal elements of N, and JA contains the row numbers of the elements of N in AN. AN stores the nonzero elements in N. The elements of AN are extracted from the HERESI records. For simplicity, the normal equations are stored on scratch disk blocks of 200 columns each. Program G-NORM is structured with the following subroutines:

OEINV
INDCRE
ANCRE
SCAL
LOES
UPDATE .

OEINV and INDCRE read connectivity information from the RESTART file and form IA and JA in the order of elimination.

ANCRE reads HERESI records into AN and reads the right side of the normal equations into r.

SCAL performs scaling of the normal equations.

LOES solves the equations.

UPDATE updates the RESTART file.

Two additional subroutines VOR and RUECK are used to apply preconditioning. They perform forward and back solutions with matrix N and given right-side vectors.

The outer iterations are again performed by multiple executions of G-NORM.

Program G-NORM uses three vectors of length n (number of unknowns) and space for one normal equation partition. It has about the same capacity as G. The number of operations (multiplications) for one inner iteration is $2n_e + 5n$, where n_e is the number of nonzero elements of the upper triangle of the normal equations. Including preconditioning, the number of operations is about $4n_e + 5n$.

EXPERIMENTAL RESULTS

Four different networks were adjusted using the conjugate gradient method. The results and their calculation time were compared to the corresponding adjustments of the NAD system (Dillinger 1978, Hanson 1978), which uses Cholesky factorization applied to a minimum profile structure of the normal matrix.

The norm of the scaled residuals was used as a convergence criterion for the iterations. It had to decrease by the factor 10^3. In addition, the number of iterations had to be smaller than n.

The decrease in the norm of the scaled residuals is a reasonable measure for evaluating the solution in nonlinear adjustment problems. The following equation holds:

$$||\Delta x|| = ||N^{-1}|| \cdot ||r|| .$$

Reducing $||r||$ by 10^3 means a reduction of the same amount for $||\Delta x||$. Because the dimensional changes of the initial values x_o are known, the inner iteration process can be stopped and a new outer iteration--checking the convergence of the nonlinear system--can be performed. In

this way, the solution can be found in the region of validity of the linearization and, therefore, less work is required.

DISCUSSION OF THE RESULTS

Table 1 shows the data used to adjust four selected networks by the conjugate gradient method. Convergence is shown in table 2.

The number of iterations for net 2 was limited to 100. Without this limitation, the number went up to 1,150 resulting in no improvement for σ_{o_1} (the standard error of unit weight).

The method did not converge to the solution (accuracy < 3 mm) for nets 1, 2, or 4 within the allowable number of iterations. Net 3 did converge to the solution. Convergence of net 1 could have been achieved by holding five points fixed. By holding the border points of net 2 fixed, the system converged in 45 seconds.

Program G-NORM was applied only to net 1. It needed as many iterations as G and <u>twice as much time</u> for the solution. The number of nonzero elements in the reduced normal equations was $2n_e = 28{,}000$, which was more than twice the number of nonzero elements in the observation equations.

Preconditioning reduced the number of iterations for the optimal value 1 of the over-relaxation parameter ω. This approach was unsatisfactory because solution time increased.

Although the results are incomplete, pending further investigation of preconditioning, the following statements can be made.

- The conjugate gradient method works well for constrained adjustments. Convergence behavior depends strongly on the number of fixed positions, especially for triangulation nets. This method is not usable for free triangulation nets, but converges well for free traverse nets.

Table 1.--A description of the networks adjusted by the conjugate gradient method showing quantities of adjusted data

Net	Type	Directions	Azimuths	Distances	Orientation unknowns	Positions	Fixed points
1	Triangulation chain	1,200	1	16	180	287	1
1a	Triangulation chain	1,200	1	16	180	287	5
2	Triangulation chain plus traverse	2,204	19	399	607	488	1
2a	Triangulation chain plus traverse	2,204	19	399	607	488	45
3	Traverse	280	-	280	158	151	2
4	Triangulation chain	1,650	1	30	396	190	1

Table 2.--Convergence behavior of adjusted networks

Net	σ_{o_A}	Number inner iterations	σ_{o_1}	Number outer iterations	σ_{o_E}	Accuracy (cm)	Total time for CG (second)	Total time for TRAVIO (second)
1	4.27	422	1.207	4	1.199	6-8	300	40
1a	4.27	188	1.245	4	1.242	0.3	150	40
2	3.006	100	1.408	2	1.270	6-8	120	70
2a	2.893	48	2.316	2	2.316	0.3	45	70
3	66.9	74	1.26	2	1.117	0.3	26	30
4	2.99	415	1.425	2	1.406	6-8	220	40

- The global change of the unknowns during the iterations (to their final values) is extremely small for triangulation networks. One reason could be that small local discrepancies, which may cause global movements of the positions, are absorbed. Extremely small changes of a few distances (scale) may cause large movement. This tendency is stronger for a free network than for a constrained one where fixed borders introduce the scale.

- Trilaterations and traverses are stable with regard to scale.

If we examine $r^t r$, we see that a local smoothing of the observations is achieved in a few steps. Figure 2 shows this smoothing as a rapid decrease in $r^t r$. Increasing the number of iterations changes the solution (net 1) slightly.

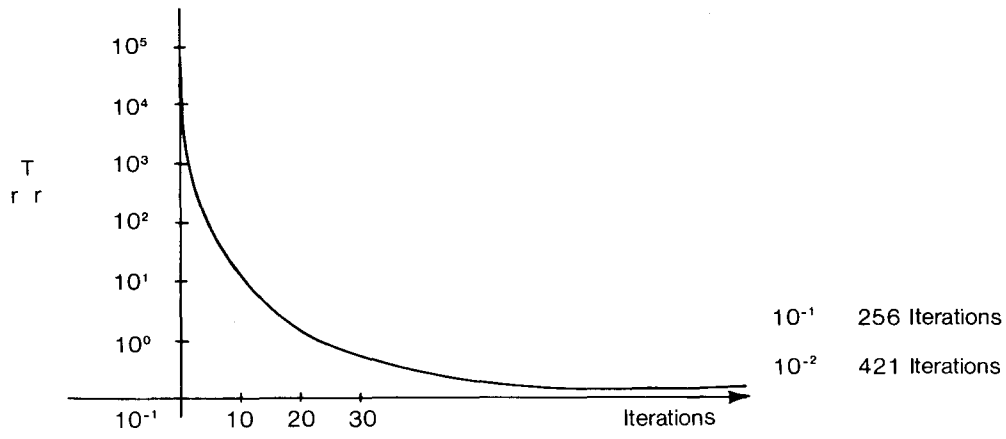

Figure 2.--Convergence of $r^t r$ as a function of the number of iterations using the conjugate gradient method.

The results show that the conjugate gradient method does not appear to be suited for the adjustment of triangulation type networks that form the main part of the U.S. national networks. Although not thoroughly explored, a possible application of this method for triangulation networks might be its use in checking the observations for gross errors. These act upon the network locally and, therefore, show up after a small number of inner iterations, e.g., 100, independent of the magnitude of the adjustment problem.

APPLICATION

The conjugate gradient method can be used for extremely large systems of equations if the number of iterations does not increase appreciably as the number of unknowns increases, e.g., in constrained adjustments. The main problem in applying this method to large systems (observation equations or normal equations) is the necessity of multiplying a matrix by a vector for each iteration. To multiply efficiently, certain elements of the matrix, the vector, and the resulting product vector must be held in core. Reading and rereading the components of the vectors are avoided if both vectors can be held entirely in core.

For very large systems of equations these vectors may be too large for both to fit in core. If this is the case, advantage must be taken of the structure of the matrix to get a reasonable partitioning of the vectors. For a banded matrix the organization shown in figure 3 is feasible.

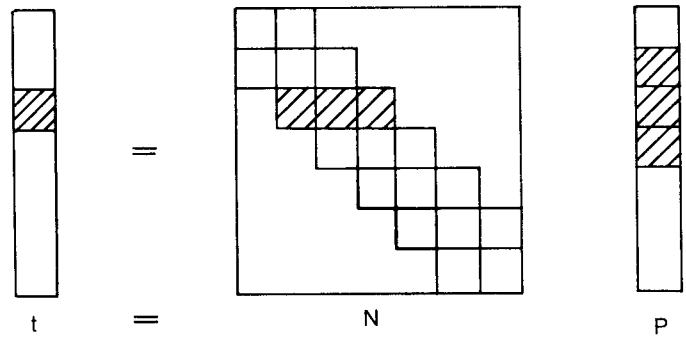

Figure 3.--Partition structure of a banded matrix.

N can be partitioned in k = n/a parts. Then "3a" elements of p and "a" elements of t must be in core because only these parts are required for multiplication. For each part, one must read the components of one vector block and one matrix block, and then compute and write the resulting vector block.

Another possibility is to choose an approach that takes advantage of the fact that geodetic observations connect only those unknowns which are close to each other. The geodetic net can be divided into individual parts, with each part connected only to its neighboring parts, as shown in figure 4. The observation equations of each part give incomplete coefficients for the normal equations that could be used, together with the associated vector blocks, to form the matrix-vector product successively.

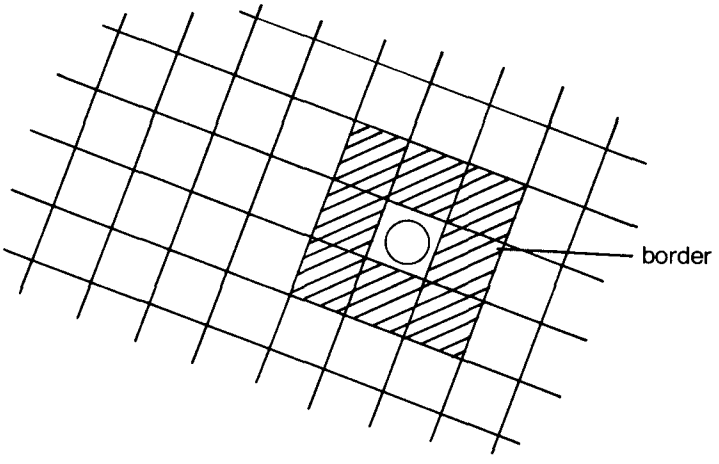

Figure 4.--A geodetic net is divided into individual parts and connected to neighboring parts to form a matrix-vector product.

For efficient computer storage, the vector elements associated with each block are separated into two classes: "interior" and "border." The interior elements are related only to the complete coefficients of the normal equations of each individual part. The border elements are related to the incomplete coefficients of the normal equations of each part and of its neighbors. To operate with the matrix elements of one part, the elements of the interior vector and the elements of the border vectors must be in core. This approach needs a more complicated organization than the one using banded matrices, but the method may be feasible for extremely large nets without regard to bandwidth.

Both approaches require that all parts be processed in each iteration. Because the global residual vector of the normal equations is formed at the first step, local discrepancies appear very early.

When compared to the direct solution method used with Helmert blocking, a big disadvantage of the conjugate gradient method is that all data blocks must be available on disk simultaneously before the iteration can start.

ACKNOWLEDGMENTS

My research at the National Geodetic Survey (NGS) was sponsored by Deutsche Forschungsgemeinschaft (National Science Foundation, Federal Republic of Germany). I wish to thank NGS for providing me with the NAD computer programs and for allowing me free computer time. I had many interesting discussions with NGS scientists. John Isner was especially helpful in interfacing my conjugate gradient programs with the NAD adjustment system.

REFERENCES

Axelsson, O., 1974: On preconditioning and convergence acceleration in sparse matrix problems. CERN 74-10, Geneva, Switzerland.

Barker, V. A., 1977: Sparse Matrix Techniques (Lecture Notes in Mathematics Series, vol. 572). Springer Verlag, New York, N.Y., 284 pp.

Björck, A., 1976: Methods for sparse linear least squares problems, in Bunch, J. R. and Rose, D. J., eds., Symposium on Sparse Matrix Computation, Argonne National Laboratory, 1975. Academic Press, New York, N.Y., 177-199.

Dillinger, W. H., 1978: Helmert block higher level system. Proceedings of the Second International Symposium on Problems Related to the Redefinition of North American Geodetic Networks, Arlington, Va., April 24-28. U.S. Government Printing Office (GPO), Washington, D.C., 417-429 (GPO stock no. 003-017-0426-1).

Dufour, H. M., 1974: Propriétés des systémes linéaires symétriques déduites de leur forme spectrale. Bollettino di Geodesia e sciense affini, No. 4.

Elfving, T., 1975: Some numerical results obtained with two gradient methods for solving the linear least square problem. LiH-Mat-R-75-5.

Evans, D. J., 1973: The analysis and application of sparse matrix algorithms in the finite element method, in Whitman, J. R., ed., The Mathematics of Finite Elements and Application. Academic Press, New York, N.Y., 427-477.

Gründig, L., 1976: Die Berechnung vorgespannter Seil- und Hängenetze unter Berücksichtigung ihrer topologischen und physikalischen Eigenschaften und der Ausgleichungsrechnung. Report DGK C 216, German Geodetic Commission, Munich, Federal Republic of Germany.

Gründig, L. and Linkwitz, K., 1975: A rigorous non-linear least square adjustment of extensive geodetic networks. (Presented to International Union of Geodesy and Geophysics, Grenoble, France, August.) Report DGK C 216, German Geodetic Commission, Munich, Federal Republic of Germany.

Hanson, R. H., 1978: A posteriori error propagation. Proceedings of the Second International Symposium on Problems Related to the Redefinition of North American Geodetic Networks, Arlington, Va., April 24-28. U.S. Government Printing Office, Washington, D.C., 427-445 (GPO stock no. 003-017-0426-1).

Hestines, M. R. and Stiefel, E., 1952: Methods of conjugate gradients for solving linear systems. Journal of Research of the National Bureau of Standards, 49 (6), 409-436.

Hilger, E., 1966: Die netzweise Ausgleichung einzelner oder mehrerer Triangulationsordnungen in einem Guß, untersucht an einem Großbeispiel. Report DGK 98, German Geodetic Commission, Munich, Federal Republic of Germany.

Isner, J. F., 1978: Helmert block initial level system. Proceedings of the Second International Symposium on Problems Related to the Redefinition of North American Geodetic Networks, Arlington, Va., April 24-28. U.S. Government Printing Office, Washington, D.C., 405-416 (GPO stock no. 003-017-0426-1).

Reid, J. K., 1971: Large sparse sets of linear equations. Institute of Mathematics Proceedings, Oxford Conference, 1970. Academic Press, New York, N.Y.

Saxena, M., 1972: Conjugate gradient method for geodetic computations. Paper presented to American Geophysical Union Fall Meeting, San Francisco, Calif., December.

Schek, H. J., Schauer, U., and Steidler, F., 1976: The Adjustment of Large Geodetic Networks by Sparse Techniques. International Business Machines, Heidelberg, Federal Republic of Germany, 3-63.

Schwarz, H., 1970: Die Methode der konjugierten Gradienten in der Ausgleichungsrechnung. ZfV, 4.

(Continued from inside front cover)

NOS NGS-3 Adjustment of geodetic field data using a sequential method. Marvin C. Whiting and Allen J. Pope, March 1976, 11 pp (PB253967). A sequential adjustment is adopted for use by NGS field parties.

NOS NGS-4 Reducing the profile of sparse symmetric matrices. Richard A. Snay, June 1976, 24 pp (PB-258476). An algorithm for improving the profile of a sparse symmetric matrix is introduced and tested against the widely used reverse Cuthill-McKee algorithm.

NOS NGS-5 National Geodetic Survey data: availability, explanation, and application. Joseph F. Dracup, Revised January 1979, 45 pp (PB80 118615). The summary gives data and services available from NGS, accuracy of surveys, and uses of specific data.

NOS NGS-6 Determination of North American Datum 1983 coordinates of map corners. T. Vincenty, October 1976, 8 pp (PB262442). Predictions of changes in coordinates of map corners are detailed.

NOS NGS-7 Recent elevation change in Southern California. S.R. Holdahl, February 1977, 19 pp (PB265-940). Velocities of elevation change were determined from Southern Calif. leveling data for 1906-62 and 1959-76 epochs.

NOS NGS-8 Establishment of calibration base lines. Joseph F. Dracup, Charles J. Fronczek, and Raymond W. Tomlinson, August 1977, 22 pp (PB277130). Specifications are given for establishing calibration base lines.

NOS NGS-9 National Geodetic Survey publications on surveying and geodesy 1976. September 1977, 17 pp (PB275181). Compilation lists publications authored by NGS staff in 1976, source availability for out-of-print Coast and Geodetic Survey publications, and subscription information on the Geodetic Control Data Automatic Mailing List.

NOS NGS-10 Use of calibration base lines. Charles J. Fronczek, December 1977, 38 pp (PB279574). Detailed explanation allows the user to evaluate electromagnetic distance measuring instruments.

NOS NGS-11 Applicability of array algebra. Richard A. Snay, February 1978, 22 pp (PB281196). Conditions required for the transformation from matrix equations into computationally more efficient array equations are considered.

NOS NGS-12 The TRAV-10 horizontal network adjustment program. Charles R. Schwarz, April 1978, 52 pp (PB283087). The design, objectives, and specifications of the horizontal control adjustment program are presented.

NOS NGS-13 Application of three-dimensional geodesy to adjustments of horizontal networks. T. Vincenty and B. R. Bowring, June 1978, 7 pp (PB286672). A method is given for adjusting measurements in three-dimensional space without reducing them to any computational surface.

NOS NGS-14 Solvability analysis of geodetic networks using logical geometry. Richard A. Snay, October 1978, 29 pp (PB291286). No algorithm based solely on logical geometry has been found that can unerringly distinguish between solvable and unsolvable horizontal networks. For leveling networks such an algorithm is well known.

NOS NGS-15 Goldstone validation survey - phase 1. William E. Carter and James E. Pettey, November 1978, 44 pp (PB292310). Results are given for a space system validation study conducted at the Goldstone, Calif., Deep Space Communication Complex.

NOS NGS-16 Determination of North American Datum 1983 coordinates of map corners (second prediction). T. Vincenty, April 1979, 6 pp (PB297245). New predictions of changes in coordinates of of map corners are given.

NOS NGS-17 The HAVAGO three-dimensional adjustment program. T. Vincenty, May 1979, 18 pp (PB297069). The HAVAGO computer program adjusts numerous kinds of geodetic observations for high precision special surveys and ordinary surveys.

NOS NGS-18 Determination of astronomic positions for California-Nevada boundary monuments near Lake Tahoe. James E. Pettey, March, 1979, 22 pp (PB301264). Astronomic observations of the 120th meridian were made at the request of the Calif. State Lands Commission.

NOS NGS-19 HOACOS: A program for adjusting horizontal networks in three dimensions. T. Vincenty, July 1979, 18 pp (PB301351). Horizontal networks are adjusted simply and efficiently in the height-controlled spatial system without reducing observations to the ellipsoid.

NOS NGS-20 Geodetic leveling and the sea level slope along the California coast. Emery I. Balazs and Bruce C. Douglas, September 1979, 23 pp (PB80 120611). Heights of four local mean sea levels for the 1941-59 epoch in California are determined and compared from five geodetic level lines observed (leveled) between 1968-78.

NOS NGS-21 Haystack-Westford Survey. W. E. Carter, C. J. Fronczek, and J. E. Pettey, September 1979, 57 pp. A special purpose survey was conducted for VLBI test comparison.

NOS NGS-22 Gravimetric tidal loading computed from integrated Green's functions. C. C. Goad, October 1979, 15 pp. Tidal loading is computed using integrated Green's functions.

NOS NGS-23 Use of auxiliary ellipsoids in height-controlled spatial adjustments. B. R. Bowring and T. Vincenty, November 1979, 6 pp. Auxiliary ellipsoids are used in adjustments of networks in the height-controlled three-dimensional system for controlling heights and simplifying transformation of coordinates.

NOS NGS-24 Determination of the geopotential from satellite-to-satellite tracking data. B. C. Douglas, C. C. Goad, and F. F. Morrison, January 1980, 32 pp. The capability of determining the geopotential from satellite-to-satellite tracking is analyzed.

Continued on inside cover

(Continued)

NOAA Technical Reports, NOS/NGS subseries

NOS 65 NGS 1 The statistics of residuals and the detection of outliers. Allen J. Pope, May 1976, 133 pp (PB258428). A criterion for rejection of bad geodetic data is derived on the basis of residuals from a simultaneous least-squares adjustment. Subroutine TAURE is included.

NOS 66 NGS 2 Effect of Geoceiver observations upon the classical triangulation network. R. E. Moose and S. W. Henriksen, June 1976, 65 pp (PB260921). The use of Geoceiver observations is investigated as a means of improving triangulation network adjustment results.

NOS 67 NGS 3 Algorithms for computing the geopotential using a simple-layer density model. Foster Morrison, March 1977, 41 pp (PB266967). Several algorithms are developed for computing with high accuracy the gravitational attraction of a simple-density layer at arbitrary altitudes. Computer program is included.

NOS 68 NGS 4 Test results of first-order class III leveling. Charles T. Whalen and Emery Balazs, November 1976, 30 pp (GPO# 003-017-00393-1) (PB265421). Specifications for releveling the National vertical control net were tested and the results published.

NOS 70 NGS 5 Selenocentric geodetic reference system. Frederick J. Doyle, Atef A. Elassal, and James R. Lucas, February 1977, 53 pp (PB266046). Reference system was established by simultaneous adjustment of 1,233 metric-camera photographs of the lunar surface from which 2,662 terrain points were positioned.

NOS 71 NGS 6 Application of digital filtering to satellite geodesy. C. C. Goad, May 1977, 73 pp (PB-270192). Variations in the orbit of GEOS-3 were analyzed for M_2 tidal harmonic coefficient values that perturb the orbits of artificial satellites and the Moon.

NOS 72 NGS 7 Systems for the determination of polar motion. Soren W. Henriksen, May 1977, 55 pp (PB274698). Methods for determining polar motion are described and their advantages and disadvantages compared.

NOS 73 NGS 8 Control leveling. Charles T. Whalen, May 1978, 23 pp (GPO# 003-017-00422-8) (PB286838). The history of the National network of geodetic control, from its origin in 1878, is presented, and the latest observation and computation procedures are explained.

NOS 74 NGS 9 Survey of the McDonald Observatory radial line scheme by relative lateration techniques. William E. Carter and T. Vincenty, June 1978, 33 pp (PB287427). Results of experimental application of the "ratio method" of electromagnetic distance measurements are given for high resolution crustal deformation studies in the vicinity of the McDonald Lunar Laser Ranging and Harvard Radio Astronomy Stations.

NOS 75 NGS 10 An algorithm to compute the eigenvectors of a symmetric matrix. E. Schmid, August 1978, 5 pp (PB287923). Method describes computations for eigenvalues and eigenvectors of a symmetric matrix.

NOS 76 NGS 11 The application of multiquadric equations and point mass anomaly models to crustal movement studies. Rolland L. Hardy, November 1978, 63 pp (PB293544). Multiquadric equations, both harmonic and nonharmonic, are suitable as geometric prediction functions for surface deformation and have potentiality for usage in analysis of subsurface mass redistribution associated with crustal movements.

NOS 79 NGS 12 Optimization of horizontal control networks by nonlinear programing. Dennis G. Milbert, August 1979, 44 pp (PB80 117948). Several horizontal geodetic control networks are optimized at minimum cost while maintaining desired accuracy standards.

NOAA Manuals, NOS/NGS subseries

NOS NGS 1 Geodetic bench marks. Lt. Richard P. Floyd, September 1978, 56 pp (GPO# 003-017-00442-2) (PB296427). Reference guide provides specifications for highly stable bench marks, including chapters on installation procedures, vertical instability, and site selection considerations.

U.S. DEPARTMENT OF COMMERCE
National Oceanic and Atmospheric Administration
National Ocean Survey
National Geodetic Survey, OA/C18x2
Rockville, Maryland 20852

OFFICIAL BUSINESS

POSTAGE AND FEES PAID
U.S. DEPARTMENT OF COMMERCE
COM-210
THIRD CLASS MAIL

U.S.MAIL

NOAA--S/T 80-46