TC
1501
.U58
no.9
c.2

NOAA Technical Report OOE9

Alternative Energy Sources Session Ocean Thermal Energy Conversion: Technology Development

Washington, D.C.
March 1980

U.S. DEPARTMENT OF COMMERCE
National Oceanic and Atmospheric Administration
Office of Ocean Engineering

NOAA Technical Report OOE9

TC
1501
.U58
no. 9
c. 2

Alternative Energy Sources Session Ocean Thermal Energy Conversion: Technology Development

William E. Richards

Division of Central Solar Energy
Department of Energy
Washington, D.C.

Joseph R. Vadus

Office of Ocean Engineering, NOAA,
Rockville, Md.

LIBRARY
OCT 20 1995
N.O.A.A.
U.S. DEPT. OF COMMERCE

Washington, D.C.
March 1980

Presented at Oceanology International '80 Conference
Brighton, England March 7, 1980

U.S. DEPARTMENT OF COMMERCE
Philip M. Klutznick, Secretary

National Oceanic and Atmospheric Administration
Richard A. Frank, Administrator

Office of Ocean Engineering
William D. Barbee, Acting Director

Mention of a commercial company or product does not constitute an endorsement by the NOAA Office of Ocean Engineering. Use for publicity or advertising purposes of information from this publication concerning proprietary products or the tests of such products is not authorized.

CONTENTS

	Page
Introduction	1
Program	2
Technology development	4
Summary	16
References	17

FIGURES

1.	50-KWe (Gross) mini OTEC plant	18
2.	OTEC systems development plan	18
3.	Generic platform concepts	19
4.	APL barge design for 10- to 40-pilot plant	19
5.	Gibbs & Cox spar design for 10- to 40-MWe pilot plant	20
6.	Isometric cutaway of the OTEC-1 test platform, a converted navy T-2 tanker	20
7.	Generic mooring concepts	21
8.	Heat exchanger concepts	21
9.	Seawater systems schematic	22
10.	Generic cold water pipe concepts	22
11.	Cold water pipe (CWP) baseline designs	23
12.	Closed cycle OTEC system schematic	24
13.	Open cycle OTEC system schematic	24

ALTERNATIVE ENERGY SOURCES SESSION

OCEAN THERMAL ENERGY CONVERSION: TECHNOLOGY DEVELOPMENT

William E. Richards
Division of Central Solar Technology, Department of Energy,
Washington, D.C.
and
Joseph R. Vadus
Office of Ocean Engineering, National Oceanic and Atmospheric
Administration, Rockville, Maryland

ABSTRACT. The United States is developing four ocean-energy technologies with significant promise: ocean thermal energy conversion (OTEC), wave power, ocean currents, and salinity gradients. The major funding emphasis has been in OTEC. This paper summarizes the technical developments, the accomplishments and major findings, the remaining problems, and the proposed plans for the future.

I. INTRODUCTION

Since the dawn of the industrial age, human requirements for energy have been increasing rapidly. Until recently, fossil fuels have been meeting the major portion of this need. But projections of a dwindling supply and a continuing growth in energy consumption have promoted a search for new and improved means of energy conversion and conservation. In the area where alternate energy sources are being developed is the ocean. The vast expanse of the oceans covers nearly three-quarters of the Earth's surface and stores sufficient energy to fulfill the needs of everyone for many years to come. Principal development thrusts for energy extraction from the ocean are now tidal, current, waves, salinity, and thermal energy conversion. Of the five sources, the thermal resource provides the greatest extractable potential without a need for a basic technological breakthrough. This resource is based on temperature differences between the warm surface water and the cold bottom water, and is initially most attractive for tropical zones.

The Ocean Thermal Energy Conversion (OTEC) concept uses the temperature differences, about 22°C, between the warm surface water (26°F) and the cold deep water (4°C at 910 meters) to operate a heat engine. The resultant output of this engine can be distributed in various ways, including transmission of electrical power for interface with an existing power grid system, or direct use by a large "plantship" on which an energy-intensive industry such as aluminum manufacturing or ammonia production is housed. Two fundamental characteristics of OTEC are: 1) the constant availability of the resource (day and night, all year) enhances OTEC acceptability as a baseload option, with no requirement for additional storage, and 2) ocean thermal energy is renewable.

The U.S. Department of Energy (DOE) has placed major emphasis on OTEC, because of the potential and availability of this resource off the southeastern coast of the United States, the Gulf of Mexico, and islands such as Hawaii, Puerto Rico, Virgin Islands, Guam, and the Marianas.

At present, a number of possible configurations for OTEC plants are proposed and under study. These include moored plants, "grazing" plants, and land-based systems.

One of the likely prospects for the first commercial sized OTEC plant is one moored in very deep water close to the coast and transmitting electrical power to shore via a power transmission cable. It is preferred that the coast have a very steep continental slope so that the undersea power transmission distance is minimized.

Another concept, the "grazing" plant, operates as a self-contained plantship on which an energy-intensive product is produced. The main advantage of this design is that the plant, with its mobility, can cruise (or "graze") around the tropical waters and can track to a degree the largest available temperature difference. Such movement can occur either monthly or seasonally in response to prior knowledge of the seasonal thermal characteristics of the locale, or on a shorter term basis connected with real-time input information on sea temperatures from satellite imagery.

Concepts for land-based OTEC facilities have also been studied. The advantages of such an operation in terms of handling the numerous ocean engineering design problems associated with floating plants make land-based facilities very attractive. However, land-based facilities require unique sites, preferably in tropical climates on islands, where the cold water resource is readily accessible.

A number of technological advances have resulted from the ocean engineering research that has been an ongoing part of this program. Many of these are applicable to other areas of energy and engineering beyond the immediate needs of the OTEC development.

This paper summarizes the technical developments, the accomplishments and major findings, the remaining problems, and the proposed plans for the future. Much of this information has been derived from reports and program review material developed by researchers under Government contract. Some of the references which were used, and which are sources for additional information on OTEC Technology Development, are given in section V, References.

II. PROGRAM

A. Objectives

The overall objective of the OTEC Engineering Research and Technology Development Program is to demonstrate the technical and economic feasibility, first of a pilot plant of about 40 MWe, followed by larger commercial demonstration plants in the 100- to 400-MWe class. The program's goal is to

continually minimize engineering risk and reduce costs, especially for eventual commercial application.

B. Technical Approach

The technical approach has followed the classical pattern of analysis, laboratory tests, at-sea test evaluations, and system integration. The entire system and the individual components have been analyzed. Analytical computer codes have been generated to validate the platform, power system, and cold water pipe designs relative to motion response and structural integrity. This analytical process facilitates formulating and evaluating preliminary designs for OTEC components, and involves later validation in the lab and at sea.

The laboratory testing of the OTEC system is a diverse effort encompassing both the power cycle and the ocean engineering components. For the past 4 years, extensive exploration and development has been done on several heat exchanger configurations at the Argonne National Laboratory and on heat exchanger biofouling requirements at the Keahole Point, Hawaii, test facility. Basic laboratory research has also investigated the properties of concrete for use with the platform and cold water pipe construction, concentrating particularly on new forms of lightweight concrete. The laboratories have also done small-scale model tests of the platform, cold water pipe, and mooring system arrangements to provide data on the response of the system to at-sea conditions. Each subsystem receives experimental verification of theoretical projections by one-third to one-fourth at-sea model tests before the next level of system integration.

The world's first at-sea OTEC plant to produce net power is called MINI OTEC and has been operating and undergoing tests off the coast of the island of Hawaii at Keahole Point (fig. 1). This system was developed by a private consortium of organizations including the University of Hawaii, Lockheed Missiles and Space Company, Dillingham Construction and Dredging Company, and Alfa-Laval. MINI OTEC is designed for 50 KWe gross of electrical output. The cold water pipe is made of polyethelene and is 0.6 meters in diameter and 630 meters long. The pipe also serves as part of the single-point mooring system. MINI OTEC has demonstrated the at-sea operational capability of OTEC, and additional data were obtained on biofouling of the heat exchangers. MINI OTEC has suspended operation from December 1979 to the spring of 1980, at which time operations are expected to resume.

In the mid-1980's, DOE's heat exchanger test facility, OTEC-1, will be ready for an at-sea evaluation. This platform can test up to five 200-KWe power cycles simultaneously, but will test a 1-MWe power cycle on the first deployment.

Another major at-sea test, in support of the development of the OTEC 10/40-MWe pilot plant, involves the one-third scale test of a fiber-reinforced plastic (FRP) cold water pipe, 3 meters in diameter and 300 meters long. This test pipe is expected to be deployed in late 1980.

C. Program Plan

The major thrust of the technology development program in fiscal year 1981 will be to begin designing a pilot plant, which will be in use the end of fiscal year 1985. This plant may be modular in construction to enable expanding the power output capability from 10 MWe to 40 MWe or 40 to 100 MWe. Figure 2 shows the major program elements of the OTEC plan leading to a pilot plant.

III. TECHNOLOGY DEVELOPMENT

A. Introduction

This section describes the scope of technology investigated, major findings, problems encountered, and engineering action planned to meet OTEC objectives. These major OTEC components are considered:

- Surface platform
- Mooring system
- Heat exchangers
- Seawater system, including cold water pipe
- Power generation
- Energy distribution system

In addition, overall system engineering aspects are considered as they apply to the entire program.

B. Platforms

Description - Platform selection for the OTEC system is based on a number of considerations, including: motion response due to environmental loading force; extent of forces induced in the cold water pipe; ability to efficiently house and support the heat exchangers, energy conversion equipment, and auxiliary equipment for closed cycle operations; relative ease in construction and maintenance; acquisition and life cycle costs; and optimal size for commercial applications.

Several configurations for the surface platform/powerplant have been investigated, including semisubmersibles, spar buoy shapes, shiplike forms, and sphere- or disk-shaped buoys, as shown in figure 3.

Major Findings - The platform studies indicated that larger plants were more cost effective in power production efficiency as compared to size. Large plants also minimized platform motions and consequent stresses to the cold water pipe. However, large size has limitations in ease of construction, transportation, and deployment, especially for the platform and cold water pipe. In view of these size considerations, a compromising selection favored size distribution of about 100 to 400 MWe for commercial size applications involving coupling into the U.S. mainland power grid. However, it is recognized that many commercial applications, such as those required for island needs, may require power levels an order of magnitude lower.

The platform studies revealed that the spar and ship/barge were the preferred platform configureations, and were subsequently used in conceptual designs for a 10/40 MWe pilot plant. A concrete barge design (fig. 4) with an articulated concrete CWP has been developed for the grazing plantship concept. A steel spar design (fig. 5) with an articulated steel CWP tension-moored through the center of CWP has been investigated for the moored concept. These designs will provide information and data for soliciting bids for producing a pilot plant.

Since commercial OTEC platforms will be of a similar size to those designed by the petroleum industry, the designs and accomplishments of that industry will play an important role in development of OTEC structures. A few oil-storage and production platforms approximate the size necessary for OTEC platforms, such as the 610,000-metric-ton North Sea "Ninian." This compares in size to a 560,000-metric-ton surface ship required for a commercial size (400-MWe) OTEC system. However, long-term operating experience with even these platforms is still very limited.

Problems/Unknowns - One of the major efforts remaining is the total system integration of the OTEC components with the platform. One problem that must be solved before commercialization is the development of a reliable, long-life coupling to connect and perhaps disconnect the pipe from the platform. The dynamic action of the platform with a cold water pipe attached remains to be experimentally validated. The ease of constructibility of large platforms/plants is another unknown requiring definition.

Action/Plans - The DOE's first at-sea operating plant, OTEC-1 (fig. 6), will provide some information on total system operation, including platform and coupled cold water pipe. OTEC-1 is primarily intended for evaluation of heat exchanger and biofouling countermeasure. An investigative study of large system construction techniques, nearing completion, will provide information regarding ease of constructibility of ship/barge and spar type platforms of commercial size up to 400 MWe.

Technical data and information on platforms and other components are being compiled for use in preparing requirements for soliciting bids on a cost-shared pilotplant in fiscal year 1981.

C. Mooring System

Description - Offshore OTEC platforms/plants for generating electricity and transmitting power to shore by transmission cable require deepwater mooring systems. Such mooring systems are required to limit the movements of the platform, with coupled cold water pipe, and minimize flexure in the electrical umbilical cable used for power transmission. The size of these platforms range from about 70,000 tons for a 40-MW plant, to about 500,000 tons for a 400-MWe commercial plant.

Site selection for a moored OTEC powerplant requires many tradeoff considerations, including proximity to shore to minimize electric power delivery costs, accessibility of an adequate cold water source, sea floor terrain profile to avoid going aground with the cold water pipe, sea floor

conditions for mooring, and environmental loading conditions. The Puerto Rico site is about 4 miles offshore, in about 5,000 feet of water, with a calcareous clay bottom sloping away from shore at about 9°. Operational sea conditions were estimated at: wind velocity of 46.5 knots; significant (i.e., average of 1/3 highest) wave height of 20 feet; and surface current velocity of 1.8 knots. For these conditions, a watch-circle radius not exceeding 10 percent of water depth was specified.

Allowable platform movement is influenced by many factors, especially the impact on transmission cable and mooring system design, operating life, and costs. Mooring design requirements for survival conditions at the Puerto Rico site were stated as the "worst in 100 years" hurricane with wind velocity of 85 knots, significant wave height of 40 feet, and a surface current of 2.4 knots. Under these conditions, it is assumed that electrical cables will be slacked-off, power generation may be shut off, and cold water pipe may be decoupled, if time permits, while the platform and mooring system must survive in place.

The design life of OTEC plant mooring systems is based on a 30-year expected plant life with some replacements permitted provided there are no significant disruptions of power generation. Although deep-water mooring systems exist, little experience relates to long-life requirements.

Major Findings - Based on survival conditions (100-year storm) for the Puerto Rico site, environmental loadings for wind currents, and wave drift forces, assuming a colinear relationship, were calculated for the 10- to 40-MWe barge (about 150 meters long, 40 meters beam, and 20 meters draft). The ranges of the calculated forces, from two separate sources, are noted below:

Type of load force	Seaway direction	Calculated range of loads in Kips*
Wind	Beam	263 to 315
	Head	169 to 249
Current	Beam	534 to 1058
	Head	367 to 780
Wave drift	Beam	806 to 940
	Head	441 to 781

* 1 Kip = 1,000 pounds.

The wave drift force is a measure of the momentum of the wave system that is transferred to the platform. This is frequently the dominant force on a large floating structure. Several methods for estimating this force have been formulated; however, further investigation is required.

A number of mooring concepts were considered in the conceptual design studies (fig. 7). For 40-MWe barge and spar platforms at the Puerto Rico

site, preliminary mooring system designs and estimates of acquisition costs for moorings were developed for the following:

	Estimated mooring cost ($ millions)
Barge with multipoint moor	31
Spar with multipoint moor	21
Spar with tension line moor	21

These mooring system configurations would require mooring lines such as wire rope in the 5- to 6-inch diameter range, and chain in the 4- to 5-inch diameter range with a typical link weighing about 300 pounds. Though these configurations are considered feasible, considerable design specific work remains.

Problems/Unknowns - There is no reliable data on fatigue or service life for 5- to 6-inch wire rope in this marine environment.

Polyethylene jacketing of wire rope has been proposed as a possible solution for corrosion-fatigue problems; however, its long-term survivability and effectiveness is not known.

Other components such as chain, anchors, winches, and windlasses are not considered off-the-shelf items, and quality assurance for their intended usage may be a problem.

A better method of predicting wave drift forces is needed to reduce the seaway loads to a realistic minimum.

While subject to environmental forces, the platform, cold water pipe, and transmission cable are all moving and interacting. The degree of coupling needs to be estimated more accurately, and a better method for predicting the dynamic response of the total system is needed.

Action/Plans - Plans include obtaining fatigue test data on wire rope, chain, and other mooring system components. Seafloor engineering investigations will be made at the planned sites to obtain data on soil properties and seafloor stability for anchoring design and deployment. Future investigations are aimed at better understanding the effects of environmental forces on the dynamic behavior of a moored OTEC plant.

D. Heat Exchangers

Description - The heat exchanger system is one of the most critical components of the closed-cycle OTEC plants currently being developed. Its function is to evaporate and condense the working fluid using the warm and cold seawater. The significant question related to the heat exchanger is one of cost effectiveness involved with reliability and maintainability, using available biofouling control methods. The capital cost of the heat exchangers has been estimated to be one-fifth to two-fifths of the total cost of the plant, dependent uon configuration and material. The assurance of reliability and maintainability has a major impact on life-cycle economics.

Several types of heat exchanger designs have been proposed. The two basic types are shell-and-tube systems and plate-and-fin systems (fig. 8). Variations of these designs are the vertical falling film, the folded tube, and the enhanced surface heat exchanger. Although the construction of heat exchangers of these designs in the size required for OTEC is not standard practice, OTEC requirements are pirmarily an exercise in scaling. The largest heat exchangers constructed have tube surface areas of about 500,000 square feet. A 400-MWe OTEC will require 40 times that, or about 1 square mile of heat exchanger surface area.

Candidate materials for OTEC heat exchangers include copper-nickel alloys, stainless-steel alloys, aluminum alloys, and titanium. Copper-nickel alloys have been the standard material for marine heat exchangers and seawater piping systems for many years. However, while this material is relatively inexpensive and abundant, it is not compatible with ammonia, the principal working fluid being considered in closed-cycle designs. Aluminum remains to be qualified for at-sea, closed ammonia cycle operation; it is subject to complex corrosion mechanisms.

Titanium is a good candidate material for evaporators and condensers, with good resistance to pitting and stress. Intergranular corrosion also can be achieved. Titanium is compatible with ammonia and has high strength for its weight. The predicted useful life of titanium heat exchangers is 30 years; however, welding and joining techniques for titanium on very large, complex structures have not been satisfactorily demonstrated. High cost and limited supply would prohibit large-scale use of the material in the near future, but long-range development for OTEC application may make it more economical. So far, there is no obvious best cost-effective material for the heat exchangers. However, titanium appears to be the most technically acceptable candidate. Only design and testing of the heat exchanger over a substantial period of time will determine the most reliable and cost effective.

Major Findings - The major findings from the heat exchanger technology area are:

- Enhanced surfaces may be used effectively on the tube side (power-fluid side) of shell-and-tube heat exchangers.

- On-line mechanical cleaning systems (brushes and circulating balls) are leading candidates for microfouling control in circular tubes and work well on single tube tests.

- Chlorination and copper alloys or antifoulant cladding on the tube sheet are being considered for macrofouling control.

- Material selection for ultimate commercialization remains the dominant question in heat exchanger design.

Further work is required on the control of macrofouling. The range of possible heat transfer tube materials has increased. In addition to titanium, several stainless-steel alloys offer high corrosion resistance. Copper-nickel claddings, copper alloys, and special aluminum claddings have shown promise

for continued corrosion evaluation. Trade-off studies have shown that less expensive materials such as shorter life aluminum and plastics may be economically feasible.

Problems/Unknowns - Further efforts will be necessary to develop cost-effective heat exchangers for mainland U.S. commercial OTEC application. Further improvements may be achieved in these technical areas:

- o Lower life-cycle-cost heat exchangers
- o Efficient and environmentally acceptable techniques of mechanical tube cleaning
- o Benefits and costs of chlorination, within the limits imposed by environmental regulation
- o Cleaning methods for corrugated plates or noncircular water channels
- o Effective brush or ball cleaning systems in water-side enhanced tubes
- o Effective ultrasonic cleaning techniques
- o Vertical tube, thin-film evaporators under at-sea conditions
- o Ammonia-water chemistry requirements versus material type, and the effects of corrosion due to ammonia leakage.

Action/Plans - A test program is evaluating countermeasures to biofouling of potential OTEC heat exchanger materials/designs. These countermeasures include M.A.N. brushes, Amertap balls, chlorination, and slurry.

The two principal land-based heat exchanger test facilities for OTEC are the Accelerated Core Test Facility (ACTF) at the Argonne National Laboratory and the Seacoast Test Facility at Keahole Point, Hawaii. ACTF was constructed at the Argonne National Laboratory to test high-performance evaporators and condensors being considered for OTEC. The primary test objectives are to measure the performance of multiple tube test units which are candidates for use in ammonia cycle OTEC plants and to compare the measured performance of these test units with performance and design calculations for smaller single tube units. The Seacoast Test Facility tests experimental heat transfer devices in a marine environment to observe fouling rates, heat transfer impedance buildup, flow of heat, corrosion to tubing materials, and cleaning processes using seawater typical of the OTEC environment. This is a long-term test facility to obtain biofouling and corrosion control data essential to the design and reliable operation of OTEC plants. Warm water tests are scheduled to begin in FY 80. In addition to these laboratory heat exchanger system tests is the larger at-sea OTEC-1 test facility.

E. Seawater System/Cold Water Pipe

Description - The OTEC seawater system (SWS) is shown schematically in figure 9. A brief description of each SWS component, of the parameters that

affect its operation, and of the operational interdependencies that occur among the SWS components follows.

The inlet screens prohibit the entry of foreign objects or material into the SWS. Hydraulic pressure drop across the inlet screen depends on inlet flow rate and area blockage ratio. Major design concerns include inlet velocity requirements to minimize fish capture, screen maintenance to remove captured matter and biofouling buildup, and swirl or secondary flow generation at the pipe inlet. Swirl in the cold water pipe can adversely affect the mass flow through the pipe and/or the performance of the seawater pumps.

The OTEC SWS pumps present challenging design problems due to these unique requirements:

- o Unprecedented high-volume flow rates
- o Low head rise
- o Large SWS mass and capabity
- o Seaway motions of the platform-supported SWS

Platform heaving motions and/or large-amplitude ocean waves can cause significant pressure differences across the pumps, resulting in dynamic effects on pump loading and power requirements. The operations of all other SWS components are critically dependent on the seawater pumps.

The SWS piping includes all surge and holding tanks, connecting pipes and fittings, flow control valves, etc., as an OTEC platform-housed system. Large conduits, fittings, and holding tanks are subject to energy-dissipative secondary currents and flow reversals and are characterized by slow response to pumping and/or platform motion-induced disturbances. Pressure surges, long response times, and energy dissipation within the SWS piping must be addressed during design or they can significantly affect the operations of the other major components of the SWS, including the seawater pumps and heat exchangers. Critical resonances or instabilities between the SWS components must be avoided.

The cold water pump (CWP) is a critical major component of the system, mainly because of its size and large moment of inertia when being handled during construction, transportation, and deployment. One concept for a 400-MWe commercial plant uses a single CWP 30 meters in diameter and 900 meters long. Also several pipes of smaller diameter can be clustered instead of one large diameter pipe. The cold water pumping requirements are about 3,000 cubic meters per second and, with an equivalent rate of warm water, the total pumping rate is equivalent to the average flow rate of the Nile River.

The design of the CWP (or array of pipes, if this is more cost effective) and its connection to the platform is a major technological problem to be solved. The "free leg" CWP configuration supported by a floating moored and/or dynamically positioned platform represents a unique marine structure. The CWP requirements for the 10- to 40-MWe pilot plant are: 10-meter diameter, 900 meters long, materials with excellent corrosion and fatigue characteristics, adaptability to various platforms, minimum required support equipment, and ease of deployment.

Major Findings - CWP's have been examined in four design categories, shown schematically in figure 10:

- o Rigid pipes with flexible joints
- o Compliant pipes
- o Stockade pipes
- o Bottom-mounted buoyant pipes

Pipe materials under consideration include:

- o Steel
- o Concrete
- o Fiber-reinforced plastic (FRP)
- o Elastromer/fabrics
- o Thermoplastics

Six baseline designs were completed recently for the pilot plant and are presented in figure 11. These designs were processed to supply a range of baseline design data. The preliminary cost estimates for constructing these six CWP designs are:

	$ million
FRP (both designs)	27
Elastomer	37
Steel	63
Bottom mounted (steel)	75
Multiple (polyethylene)	78

The SWS and CWP studies found:

- o The pump and pump-drive concepts of the SWS which will be used for the pilot plant are within the state-of-the-art.

- o Macrofouling will be a problem for the SWS. Countermeasures will be needed, such as copper alloy screens that will reduce the effects of fouling with low maintenance, or antifouling coatings that will also be effective but require more maintenance.

- o CWP's should not be rigidly attached.

- o In designing the CWP, the ship motion, subsurface currents, and vortex shedding loads must be considered simultaneously. More flexible pipe materials and configurations should be considered with ring stiffeners to withstand collapse loads.

- o CWP designs and costs vary considerably depending on the site environmental loading conditions. Commercial size CWP designs may require new, specially built facilities, and the designs must be matched to the platform type selected.

- To assist in the CWP design process, elastic beam analytical computer models have been developed and are being corroborated by existing lab and at-sea test data. Complete validation is expected in the near future. Also, a three-dimensional analytical code of the CWP is being formulated to describe both nonlinear beam and shell-like response to pipe loadings.

- Recent laboratory tests have identified the lengths of vortex cells of constant eddy frequency as a function of current velocity shear. These vortex cells can produce overpressures on the CWP that, in combination with certain types of pipe construction, platform motion, and environmental conditions, could drastically reduce CWP fatigue life.

Problems/Unknowns - As more is being learned about the seawater system and the cold water pipe, new questions and problems arise. The following problems are among those being investigated.

To ensure reliable SWS designs the dynamic effects of water flow and platform motion on the SWS system operation must be understood, an optimal type of pump drive and the maintenance and replacement requirements for screens must be determined, and the long-term effects of macrofouling, both organic and inorganic, and the extent this fouling depends on certain OTEC sites, water depth, and seasonal variations must be examined.

The prediction of the loads on the CWP is a major area of uncertainty. The current loads at Reynolds numbers above 10^7, the effects of vortex shedding, and the results of internal flow on the pipe motion need to be analyzed. The data gathered from actual pipe tests are needed to validate the analytical models of the pipe. In the area of component tests, flexible joints and bearings must be tested to establish maintenance requirements and procedures. Vortex suppression devices must be tested to determine their effectiveness.

Action/Plans - In the seawater systems area, an investigation is underway to develop a computer-aided analytical model to describe the interactions of all the components that constitute the OTEC hydraulic loop, i.e., the cold water intake pipes, screens, pumps, sumps, heat exchangers, and discharge pipes.

The primary engineering development program, however, is directed toward the solution of major CWP problems. A comprehensive program plan has been developed. A one-third scale (3- meter diameter and 300 meters long) CWP at-sea test will be performed this year. Investigations of vortex shedding and suppression devices are planned in this at-sea test. Various transportation, pipe release, and recovery scenarios will also be explored. Another CWP effort is to test two sections of a one-third-scale lightweight concrete CWP model for basic engineering properties.

F. Power Generation

Four power cycles are under evaluation. Each cycle is believed to offer some cost-reducing feature.

Closed Cycle - In the closed cycle (fig. 12) a working fluid is used in a Rankine cycle consisting of an evaporator, a turbogenerator, a condenser, and a pressurizer (feed pump). Warm surface water is pumped into the evaporator where subcooled ammonia liquid is turned into vapor. The exhaust of the turbine is wet ammonia vapor. The ammonia is condensed in a surface condenser which receives its cooling water through a deep cold water pipe. The condensed ammonia is pressurized before it is again fed into the evaporator.

To date, the closed cycle (fig. 13) with ammonia as the working fluid has been emphasized by OTEC researchers. The DOE program has been designed on the assumption that the closed cycle has the highest probability of achieving early economic viability.

Open Cycle - The open or Claude cycle is the forerunner of the closed cycle. It derives its name from the attempts of Georges Claude to operate an OTEC system using seawater as the working fluid. Warm seawater is deaerated and passed into a flash evaporation chamber, where a fraction of the seawater is converted into low-pressure steam. The steam is passed through a turbine which extracts energy from it and then exited into a condenser. The condensate need not be returned to the evaporator as in the case of the closed cycle. Rather, if a surface condenser is used, the output is desalinated water. Or, if a spray, direct-contact condenser is used, the condensate is mixed with the cooling water and discharged back into the ocean.

Hybrid Cycle - A concept combining the closed and the open cycles, the hybrid cycle, has been proposed. In this concept, steam is generated by flash evaporation as in the Claude cycle. This steam then acts as the heat source for a "conventional" closed Rankine cycle using ammonia or some other working fluid.

Lift Cycle - Another open cycle concept under evaluation is the steam lift approach. In this concept, the power cycle requires a hydraulic turbine instead of the vapor turbine of the Claude cycle. The warm surface water is allowed to evaporate in such a way that it entraps substantial volumes of water with it. The condenser is above the evaporator and receives its cold water from the cold water pipe. Thus, because of the pressure gradient created by the temperature difference, the vapor-liquid mixture rises from the evaporator into the condenser. The potential energy of the warm water raised to the condenser level can then be converted into shaft power through the use of a hydraulic turbine located at the "same" elevation as the warm water intake.

Two approaches are being pursued. The first requires the addition of a surfactant to the warm water to cause foaming. The foam rises up to a condenser preceded by a foam separator. The other relies on creating a mist. In either case, the liquid is lifted upward by the vapor flow.

Power Generation System - The ammonia pumps, the turbine, and the generator, which are the principal elements of a closed cycle power generation system, are all considered technically within the state-of-the-art for the 10- to 40-MWe pilot plant.

G. Energy Distribution

Description - Transmission of electrical power from an OTEC platform requires that extrapolations be made from the accumulated experience in high-voltage electromechanical cables. Design guidelines from past experience cannot always be used with confidence, particularly when the requirements for new design depart from the proven capabilities of the old design.

Both the riser and bottom electrical cables for the commercial size plant and 10- to 40-MWe plant are being investigated. Consideration has been given to procedures for reducing long-term mechanical stresses and for the construction and installation of the entire electrical cable system.

Major Findings - The major findings in the riser cable program are:

- o Aluminum conductor/aluminum sheathed cable meets both electrical and mechanical requirements based on static analysis. Further study of dynamic loading and fatigue strength is required.
- o Self-contained, oil-filled cables and extruded dielectric cables are appropriate to OTEC application. Extruded dielectric cables represent a greater extension of the state-of-the-art.
- o Use of a submerged, standoff buoy to support the cable and minimize cable constraints on the mooring system is recommended.

The major findings in the long distance bottom cable program are:

- o Copper conductor/lead sheathed cables meet electrical and mechanical requirements based on cable-laying load analysis methodology.
- o Self-contained, oil-filled cables are recommended for a.c. application, impregnated paper dielectric cables for d.c. application. With suitable extension of the state-of-the-art, extruded solid dielectric cables have potential for both applications.
- o Embedding of cables will be a time consuming and expensive process. For such protection, techniques must be evaluated in detail. Sites should be selected to minimize this requirement.

Problems/Unknowns - For the moored electric pilot plant, only the riser cable (from the platform to the ocean floor) is technologically critical, because the combination of electrical and mechanical loads is outside of the long-term experience base of the undersea power-cable industry. This is not critical at the pilot-plant level, but may be at the commercial demonstration-plant level.

The following problems remain to be addressed:

- o The OTEC system severe requirements for an insulated high-voltage power transmission system, i.e., cyclical loads (flexure, torsion, tension) and the effects of these dynamic loads on such power cables are not verified.

- Although the cable design methodology and performance standards exist for bottom-laid cables (at OTEC power levels), they must be rewritten and verified for the riser cable at these power levels.

Design and development of riser cables are underway. Testing of electric cable samples is scheduled for completion before the award of a preliminary design contract for a pilot plant.

H. Overall System

From a total system point of view, research and development are active in the following areas:

- OTEC sybsystem integration
- System inspection, maintenance, and repair
- Large system construction techniques

System Integration - For OTEC to be successful requires total system integration. Coupling between the platform, CWP, electric cable, and mooring subsystems is not sufficiently defined, and trade offs are being made to develop an optimal OTEC system. Because such couplings have not yet been designed in detail, their behavior is difficult to predict from analytical studies. By developing a subsystems technology data base and making total system assessments, sufficient information will be available to ensure optional system integration of an OTEC plant.

Inspection, Maintenance, and Repair - An example of a total system assessment study was the inspection, maintenance, and repair (IM&R) project initiated in late 1979. The purpose of this study was to establish, at an early stage, an understanding of the IM&R requirements for the pilot plant designs and to identify the equipment and techniques which could be used in such IM&R procedures. The IM&R requirements and implementation will influence the development of the pilot plant design, deployment, and operation.

Large System Construction Techniques (LSCT) - As a part of the total OTEC system integration effort, a project is underway to examine and evaluate the probable construction and installation processes and problems of a commercial plant. The following tasks have been identified and will be considered in the LSCT project:

- Definition and investigation of the requirements for construction and installation

- Identification of the major problems, constraints, and deficiencies in construction and installation and assessment of the capability of the offshore industries/shipyards to construct and install commercial OTEC plants during two time periods, one beginning in 1980 and the other in 1985

- Preparation of construction and installation plans for these time periods

The following preliminary findings from the LSCT project pertain to the platform, cold water pipe, and mooring system:

- o In general, the construction of a spar type platform is more complicated and more expensive than a ship type.
- o The concrete spar with internal power modules will be more difficult to build and more expensive compared to the other options. With external modules it is less difficult, but may still require construction in two horizontal parts.
- o Because of the acceleration forces that have to be transmitted between platform and cold water pipe, heavyweight pipes are not compatible with the ship-type platforms without major structural modifications.
- o A heavyweight pipe with buoyancy compensation can reduce the submerged weight; however, the handling of such a mass is complicated by the resulting acceleration forces from the handling process itself and by density variations in the surrounding water.

IV. SUMMARY

The Ocean Energy Program of the U.S. Department of Energy is predominately oriented towards OTEC. The development of thermal energy conversion, as presented in this paper, reflects the development of the major individual subsystems: platform, mooring, seawater systems, power generation, and electric power transmission cable. It has been determined that the critical technology areas that remain to be addressed are:

- o Cold water pipe (CWP) design, deployment, and survivability
- o Electric riser cable for power transmission
- o Biofouling cleaning of the heat exchangers

The U.S. Department of Energy Technology Development Program is focused on each of these critical technology areas. Programs underway include: CWP one-third scale At-Sea Test Program, SIMPLEX cable engineering study, and OTEC-1 Programs, respectively.

DOE's OTEC Program is designed to identify systematically the remaining problems and conduct research and development to minimize risks, reduce cost, and provide a commercial incentive program to stimulate industry for the rapid implementation of the OTEC concept.

The rapid implementation of new and innovative alternate energy sources, such as OTEC, is of paramount importance to the United States. The rapid depletion of oil and natural gas, and the greater dependence upon foreign sources heighten the urgency of deploying effective and efficient alternate energy sources. The OTEC Program, as presented in this paper, reflects the U.S. dedication to this principle.

V. REFERENCES

1. Lockheed Missiles and Space Co., Inc., 1980. "Preliminary Design for Ocean Thermal Energy Conversion (OTEC) Stationkeeping Subsystem (SKSS): Design Requirements," LMSC-673832, pp.

2. M. Rosenblatt and Son, Inc., 1980. "OTEC Modular Plant SKSS Design: Basic Design Requirements," MR&S Report 6042-1, pp.

3. Proceedings of the 6th OTEC Conference, 1979, Washington, D.C., pp.

4. Proceedings of the 5th OTEC Conference, 1978, Miami, FL, pp.

5. Proceedings of the 11th Offshore Technology Conference, 1979, Houston, TX, Proceedings Paper Numbers 3542-46 and 3587-93, pp.

6. Proceedings of the 10th Offshore Technology Conference, 1978, Houston, TX, Proceedings Paper Numbers 3334-39, pp.

7. Proceedings of the Marine Technology '79 Conference, 1979, New Orleans, LA, pp. 1-33 and 315-45.

8. Proceedings of A.S.M.E. Energy Sources Conference and Exhibition, 1980, New Orleans, LA, pp.

9. Proceedings of Department of Energy OTEC Objectives and Status Conference, 1979, Laurel, MD, pp.

10. Science Applications, Inc., 1979. "OTEC Modular Experiment Cold Water Pipe System Design Study," Report No. SAI-057-79-1049LJ, pp.

11. TRW Defense and Space Systems Group, 1979. "Ocean Thermal Energy Conversion Cold Water Pipe Preliminary Design Project," pp.

12. U.S. Department of Energy, 1979. "Multiyear Program Plan," pp.

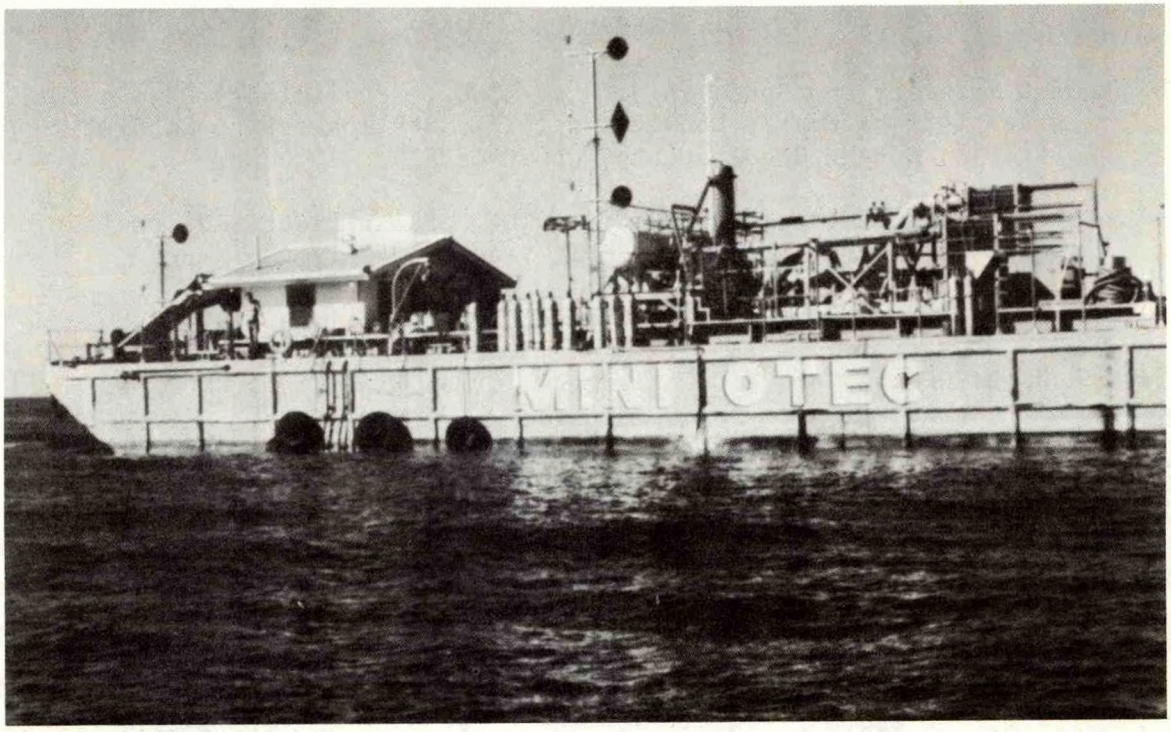

Figure 1 - 50 KWe (Gross) - Mini OTEC Plant

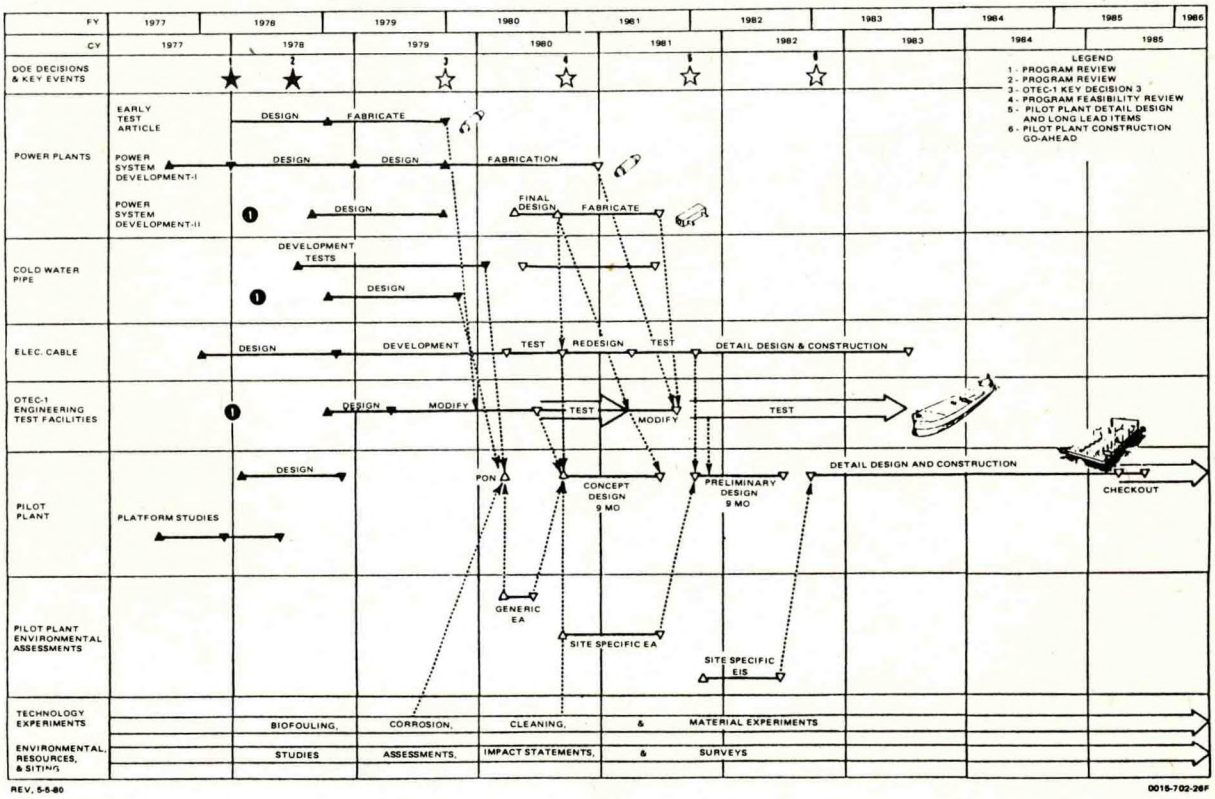

Figure 2 - OTEC Systems Development Plan

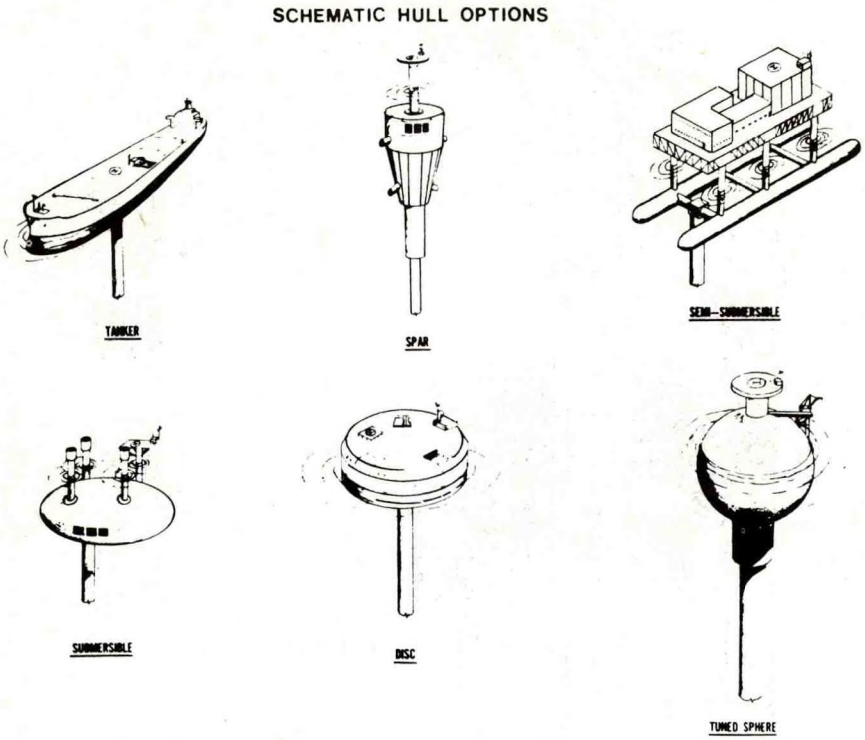

Figure 3 - Generic Platform Concepts

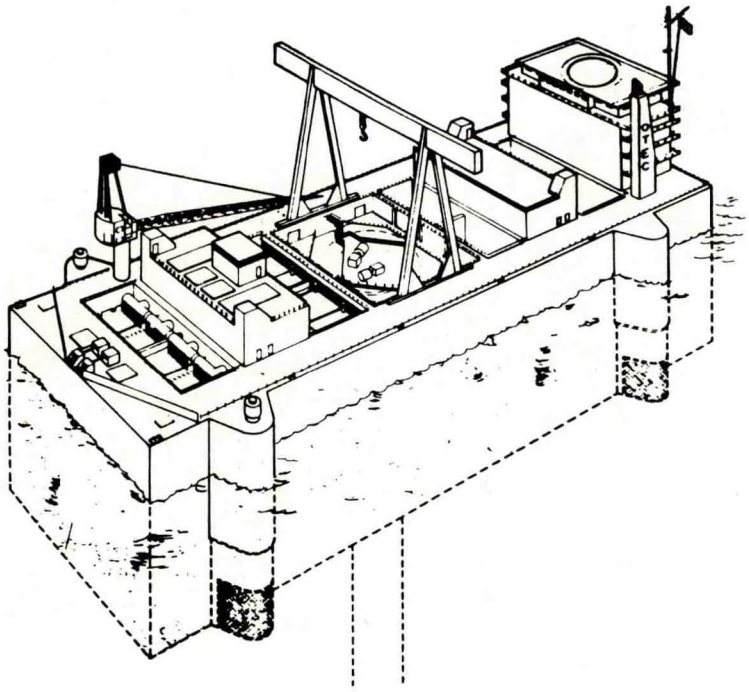

Figure 4 - APL Barge Design for 10/40 MWe Pilot Plant

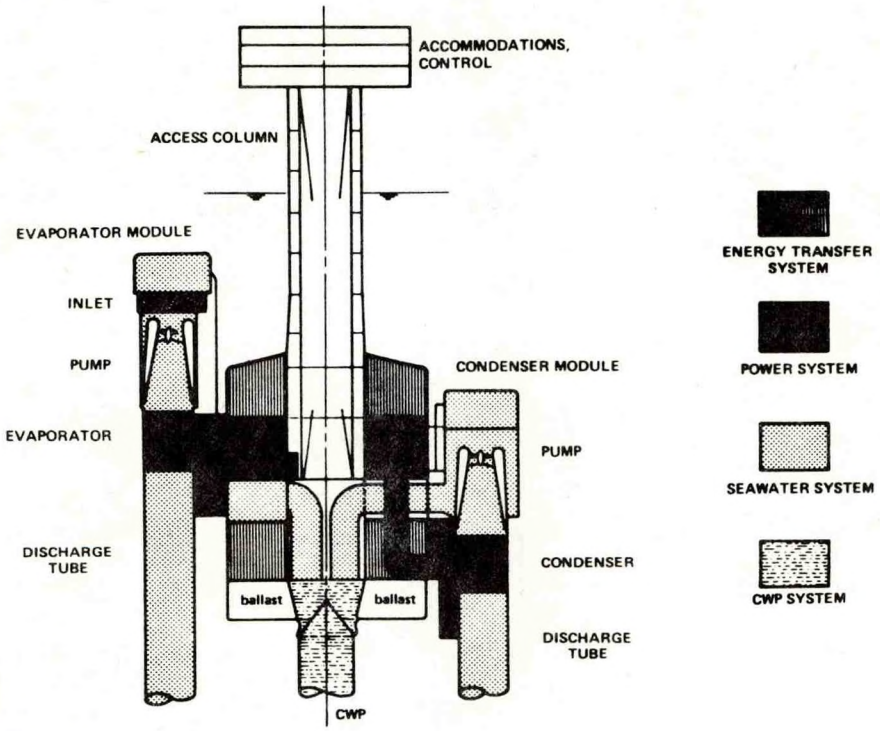

Figure 5 - Gibbs & Cox Spar Design for 10/40 MWe Pilot Plant

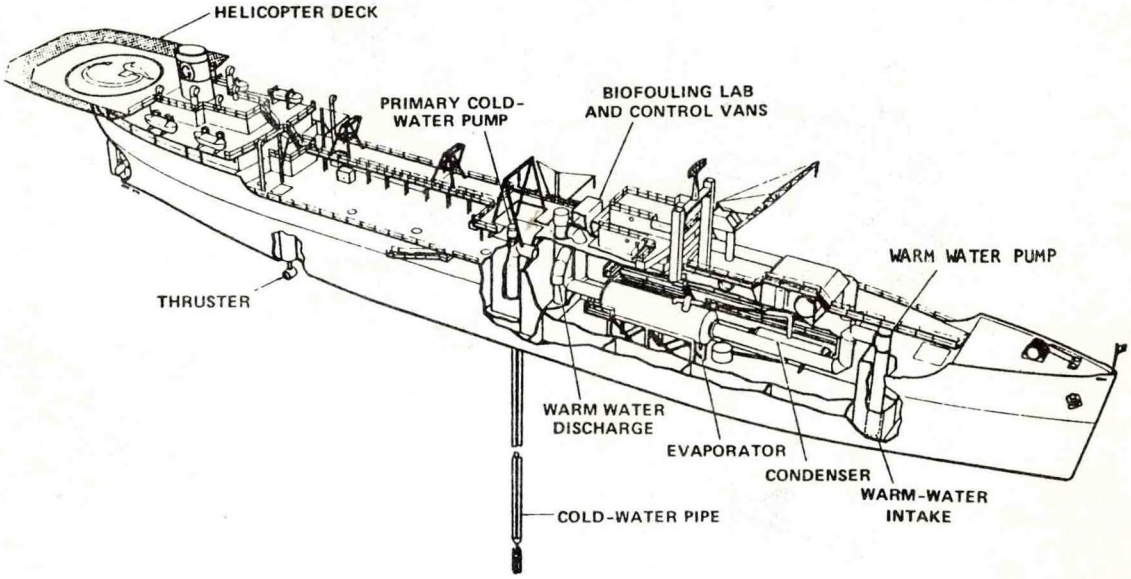

Figure 6 - Isometric Cutaway of the OTEC-1 Test Platform, a Converted Navy T-2 Tanker

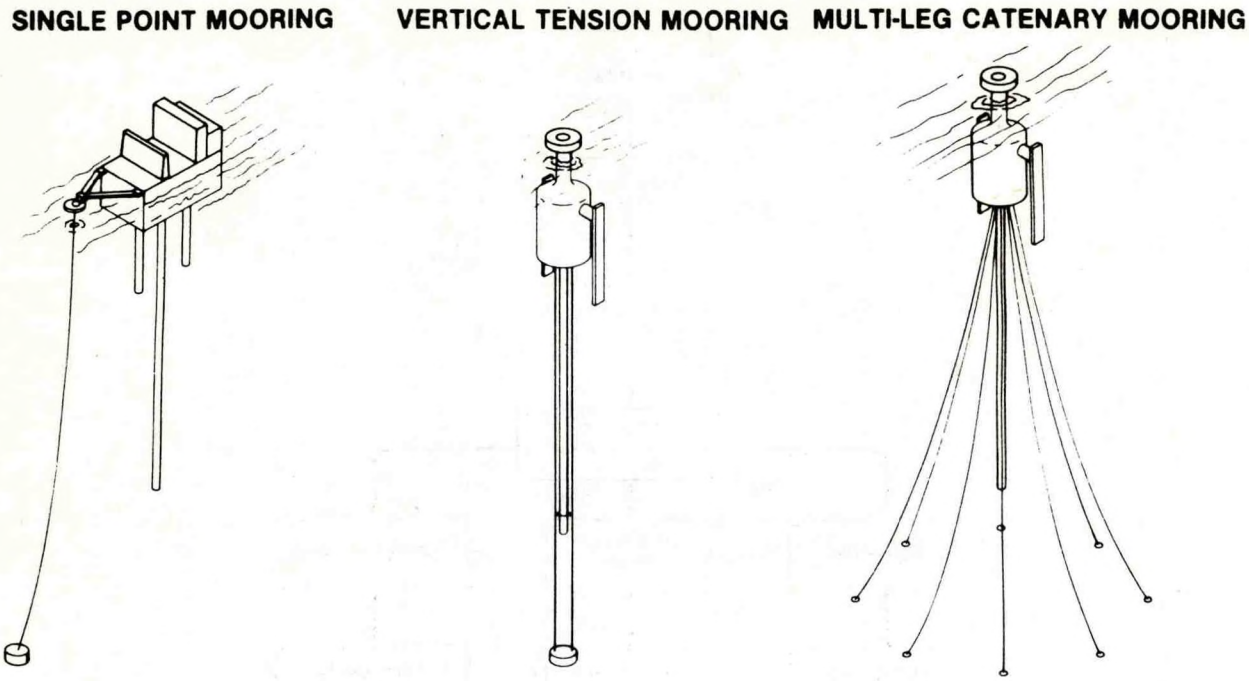

Figure 7 - Generic Mooring Concepts

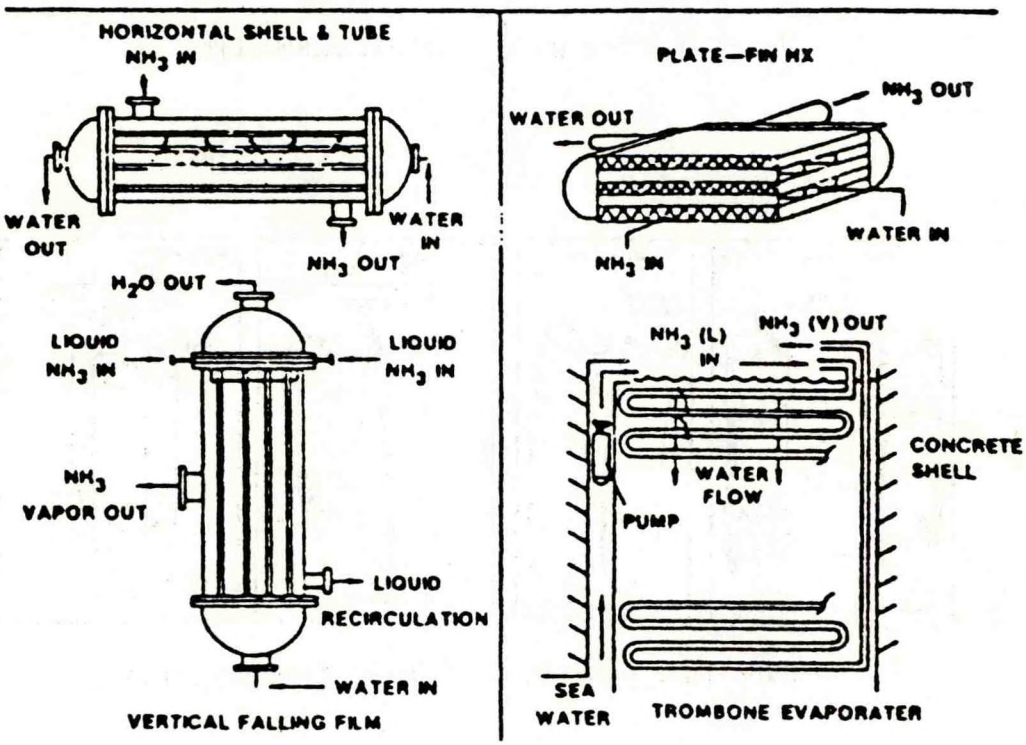

Figure 8 - Heat Exchanger Concepts

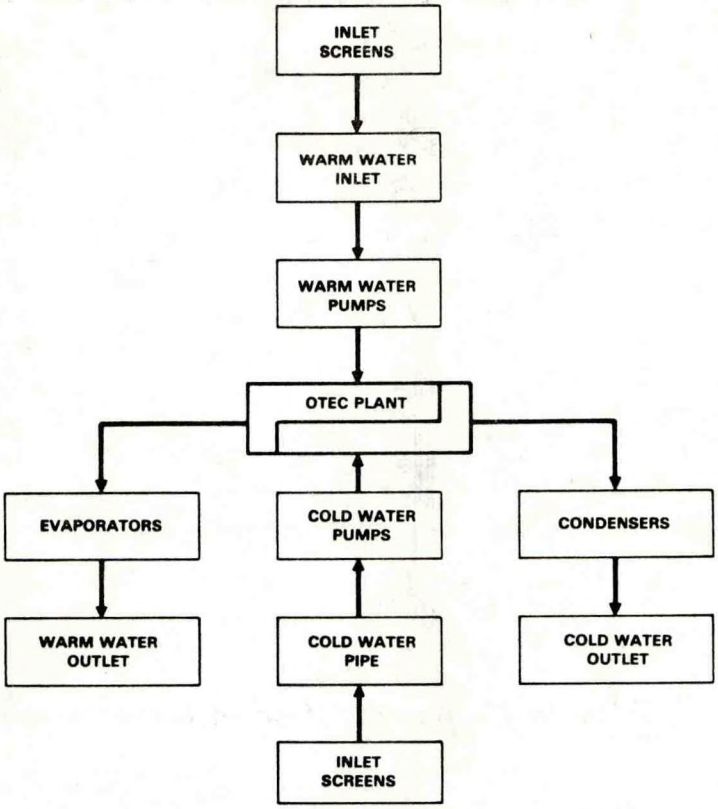

Figure 9 - Sea Water Systems Schematic

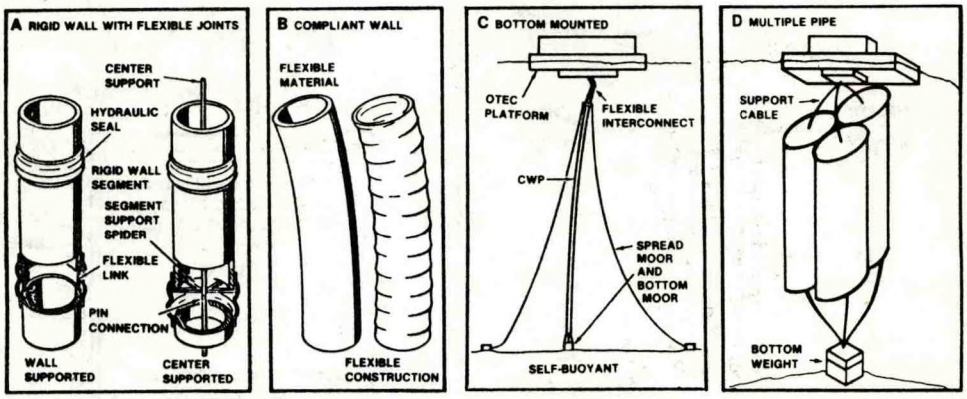

Figure 10 - Generic Cold Water Pipe Concepts

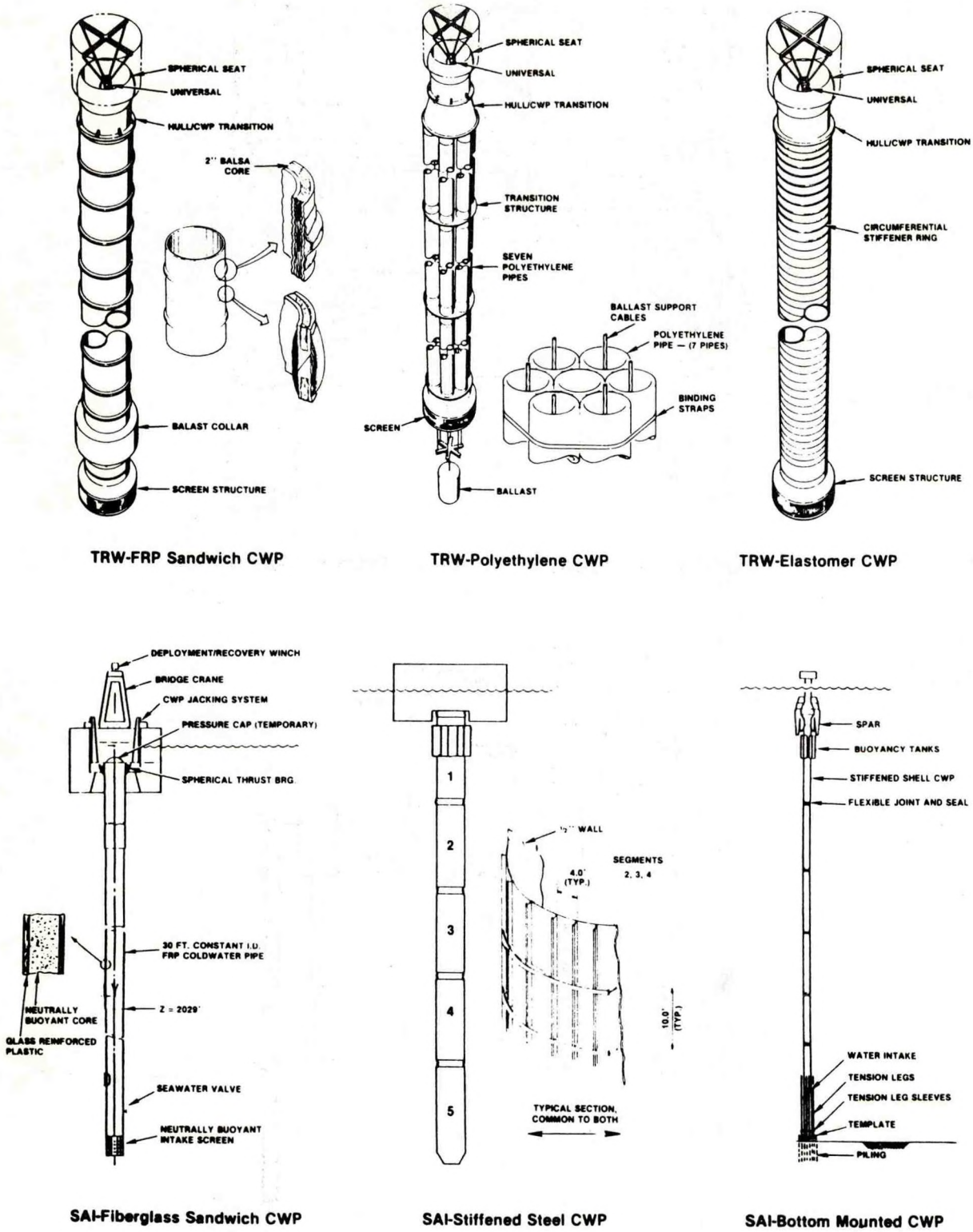

Figure 11 - Cold Water Pipe Baseline Designs

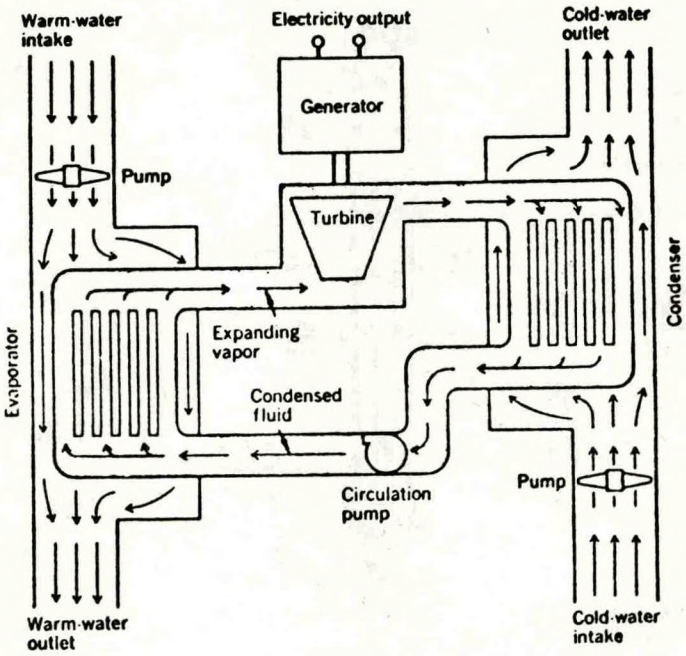

Figure 12 - Closed Cycle OTEC System Schematic

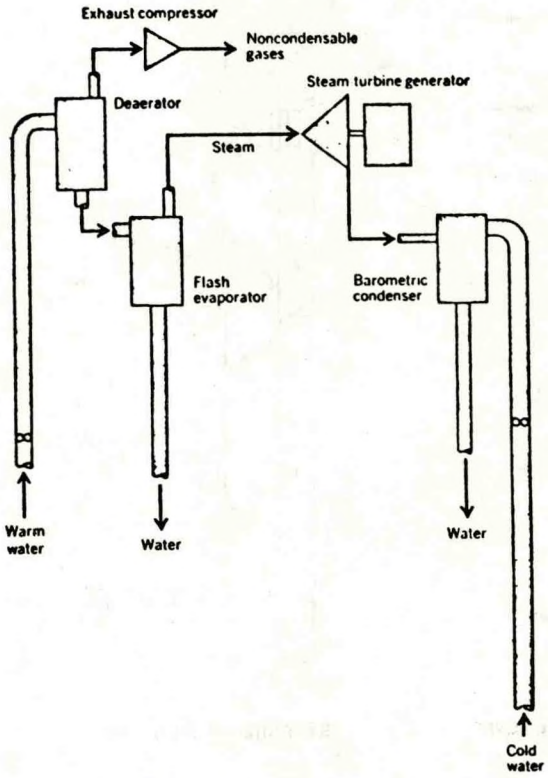

Figure 13 - Open Cycle OTEC System Schematic

NOAA SCIENTIFIC AND TECHNICAL PUBLICATIONS

The National Oceanic and Atmospheric Administration was established as part of the Departmer Commerce on October 3, 1970. The mission responsibilities of NOAA are to assess the socioeconomic im of natural and technological changes in the environment and to monitor and predict the state of the solid E the oceans and their living resources, the atmosphere, and the space environment of the Earth.

The major components of NOAA regularly produce various types of scientific and technical infor tion in the following kinds of publications:

PROFESSIONAL PAPERS — Important definitive research results, major techniques, and special investigations.

CONTRACT AND GRANT REPORTS — Reports prepared by contractors or grantees under NOAA sponsorship.

ATLAS — Presentation of analyzed data generally in the form of maps showing distribution of rainfall, chemical and physical conditions of oceans and atmosphere, distribution of fishes and marine mammals, ionospheric conditions, etc.

TECHNICAL SERVICE PUBLICATIONS — Reports containing data, observations, instructions, etc. A partial listing includes data serials; prediction and outlook periodicals; technical manuals, training papers, planning reports, and information serials; and miscellaneous technical publications.

TECHNICAL REPORTS — Journal quality with extensive details, mathematical developments, or data listings.

TECHNICAL MEMORANDUMS — Reports of preliminary, partial, or negative research or technology results, interim instructions, and the like.

Information on availability of NOAA publications can be obtained from:

ENVIRONMENTAL SCIENCE INFORMATION CENTER (D822)
ENVIRONMENTAL DATA AND INFORMATION SERVICE
NATIONAL OCEANIC AND ATMOSPHERIC ADMINISTRATION
U.S. DEPARTMENT OF COMMERCE

6009 Executive Boulevard
Rockville, MD 20852

NOAA--S/T 80-121

NOAA CENTRAL LIBRARY
CIRC TC1501 .U58 no.9
Richards, W. Alternative energy sources
3 8398 0003 2189 7