Maryland Guidebook For Marina Owners and Operators on Hurricane and Severe Weather Preparedness

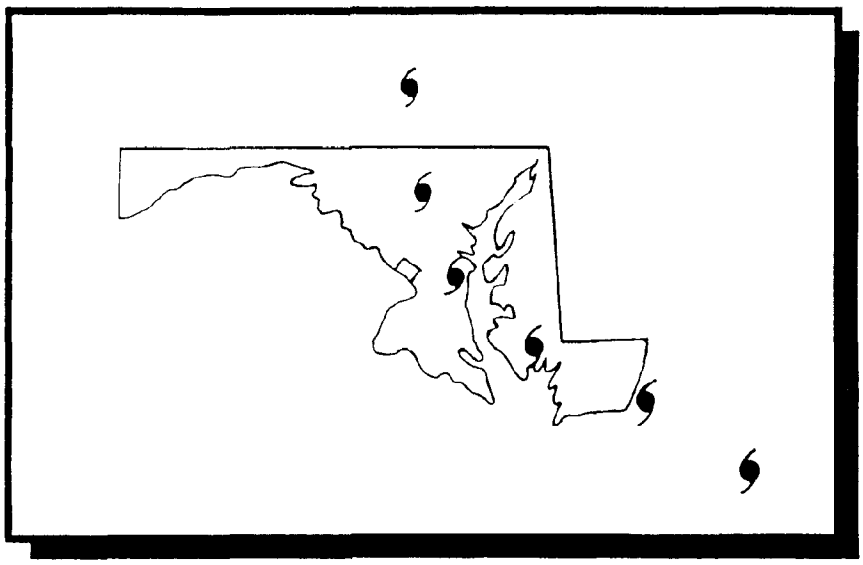

MARYLAND DEPARTMENT OF NATURAL RESOURCES

Maryland Guidebook For Marina Owners and Operators on Hurricane and Severe Weather Preparedness

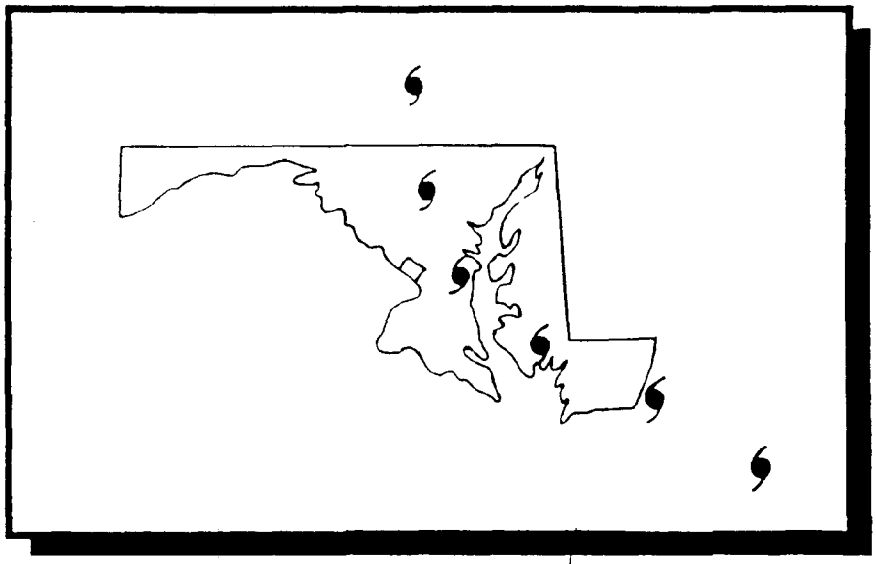

MARYLAND DEPARTMENT OF NATURAL RESOURCES

TC 328.M3 M3 1992

DISCLAIMER

The statements, recommendations and procedures contained in this manual are those of Coastal Technology, Incorporated, and do not necessarily reflect the views of the State of Maryland or the U.S. Government. Coastal Technology, Incorporated warrants that their services were performed with the usual thoroughness and competence of the technical consulting profession, and no other warranty, either expressed or implied, is included or intended.

This manual was developed to provide guidance for Maryland marinas. The users must assume responsibility for adapting, activating and/or supplementing the information contained herein to meet the particular requirements of their marina. It is intended that this manual complement state and local codes and ordinances, whose provisions should prevail in the event of conflict.

Maryland Guidebook For Marina Owners and Operators on Hurricane and Severe Weather Preparedness

Prepared For The

Maryland Department of Natural Resources

Boating Administration
Water Resources Administration
Tidewater Administration

Through a Grant Provided by the
Coastal Zone Management Act of 1972

Administered by the
U.S. Department of Commerce
National Oceanic and Atmospheric Administration
Office of Ocean and Coastal Resources

Prepared By

COASTAL TECHNOLOGY, INC.
228 N. Lynnhaven Road, Suite 124
Virginia Beach, Virginia 23452
(804) 340-8507

January 1992

The facilities and services of the Department of Natural Resources are available to all without regard to race, color, religion, sex, age, national origin, physical or mental disability.

Table of Contents

		Page
Introduction		iii
Glossary of Severe Weather Terms		v
Chapter One	Knowing What to Expect	1
Chapter Two	Why a Severe Weather Plan	5
	Having a Plan	5
	Making it Work	6
	Clean Up	6
	Economic Incentives	7
	Marina Insurance Considerations	7
Chapter Three	Hazards of Severe Weather	11
	Thunderstorms, Northeasters, Tornados, and Hurricanes	11
	Types of Hazards from Severe Storms	13
	Hazards from Hurricanes	17
	Saffir / Simpson Hurricane Scale	19
Chapter Four	Lessons from Hurricane Hugo	21
	South Carolina Marina Facilities	21
	Marina Damages	22
Chapter Five	Marina Design Considerations	25
	Relevant Terminology	25
	Issues of Concern	27
	Basic Planning Considerations	28
	Factors to be Addressed	29
	Specific Examples	34
	Summary	35
Chapter Six	Evacuation, Routes, and Shelters	41
	Planning	41
	Evacuation	42
	Shelters	43
	Evacuation Travel Patterns	43
	Special Considerations	44
	Additional Information	44

Table of Contents (continued)

Chapter Seven	Your Severe Weather Preparedness Plan	45
	Formulating Your Plan	45
	Responsibilities	45
	Developing Your Plan	46
	Annual Preparations	47
	Implementing Your Plan	48
	Summary	48
Bibliography		51
Introduction to Tabs		55
Tab A	Severe Weather Preparedness Plan	
Tab B	Marina Tenants Severe Weather Questionnaire	
Tab C	Hurricane / Severe Weather Information (Emergency Listing)	
Tab D	County Emergency Management Civil Defense Organization Contacts	
Tab E	Communications	
Tab F	Hurricane Response Checklist	

INTRODUCTION

This guidebook is part of an ongoing effort by the State of Maryland to assist the marine community in preparing for severe weather, especially hurricanes. It was developed specifically for marina owners/operators like yourself, and includes:

- Typical weather patterns, storm events and storm dangers which can be expected at marinas in Maryland...
- Actions you can take for your clients and your marina to reduce loss from severe weather...
- How improved design and preparedness will result in tangible dollar savings...

The purpose of this guidebook is to provide you with general information for mitigating flood and wind storm damage. It is not to be used as a design manual or a substitute for the preparation of a severe weather preparedness plan for your marina. However, it will provide you with the guidelines you will need to prepare your **SEVERE WEATHER PREPAREDNESS PLAN.**

This guidebook may be revised to keep current with experience and advances in available technology.

Glossary of Severe Weather Terms

ADVISORY - A message released by a hurricane center, usually at 6 hour intervals, updating information on the storm or hurricane, including watches and warnings whenever they are in effect. A "special advisory" is a warning given any time there is a significant change in weather conditions or change in warnings previously released. An "immediate advisory" updates information in advisories at 2 to 3 hour intervals, whenever a watch or warning is in effect.

ETA - Estimated Time of Arrival.

FLASH FLOOD WATCH - Flash flooding is possible within a designated area.

FLASH FLOOD WARNING - Flash flooding is imminent; take immediate action.

FLOODPLAIN - Any land area susceptible to being inundated by water from any source.

GALE WARNING - A warning of sustained winds within the range of 39 to 54 miles per hour (34 to 47 knots).

HATTERAS LOWS - Low pressure storms that develop along the Carolina coasts.

HURRICANE - A tropical cyclone (a storm that rotates counterclockwise) with sustained winds of 74 miles per hour (64 knots) or greater.

HURRICANE ADVISORIES - Messages issued by the National Hurricane Center summarizing all coastal warnings in effect, including hurricane watches, a description of the storm, its position, anticipated movement and prospective threat to land.

HURRICANE WATCH - The first alert when a hurricane poses a possible, but as yet uncertain, threat to a certain coastal area. Small craft advisories are issued as part of a hurricane watch for a coastal area when there is a threat of hurricane conditions within 24 to 36 hours.

HURRICANE WARNING - Issued when hurricane conditions are expected in a specified coastal area in 24 hours or less. Hurricane conditions include winds of 74 miles an hour (64 knots) or greater and/or dangerously high tides and waves. Actions for protection of life and property should begin immediately when the warning is issued.

NORTHEASTERS - Low pressure storms that develop along the Atlantic characterized by strong northeast winds.

SEICHE - A mound of water developed by storm wind or changes in pressure and released during the approach of the storm center due to changes in the bottom topography or coastal configuration.

STORM WARNING - When associated with a hurricane or tropical storm, a warning of sustained winds in the range of 55 to 73 miles per hour (48 to 63 knots). If a hurricane is expected to strike a coastal area, gale or storm warnings will not usually precede the hurricane warnings.

STORM SURGE - A rise in water level caused by a storm as it moves over or near the coastline. It can be much higher than mean sea level with high, breaking waves, and higher than the normal tidal rise.

SMALL CRAFT ADVISORIES - When a hurricane or tropical storm threatens a coastal area, small craft are advised to remain in port or not to venture into the open sea.

TROPICAL DISTURBANCE - A moving area of thunderstorms of tropical origin that maintains its identity for 24 hours or more.

TROPICAL DEPRESSION - A rotary circulation at the surface of the water with a sustained wind speed of 38 miles per hour (33 knots) or less.

TROPICAL STORM - Distinct rotary circulation with sustained wind speeds of 39 to 73 miles per hour (34 to 63 knots).

TORNADO WATCH - Tornadoes and severe thunderstorms are possible in your area.

TORNADO WARNING - A tornado has been detected in your area. Take shelter.

Chapter One

Knowing What To Expect

Severe weather causes more than one billion dollars in property damage in the United States every year. That is not surprising when you consider that a single hurricane can generate energy equivalent to 1,000 times the electrical power generated in the United States every day.

Maryland's marinas are highly vulnerable to the destructive forces of severe weather; they have felt the affects of over 60 hurricanes and violent storms in the past 50 years. The potential for devastation to your marina from storm related tidal surges, winds, waves, and rain is quite real.

Severe weather can come in the form of a lightning or hail storm, a northeaster, a tornado, or a hurricane. Because hurricanes are the most severe and damaging storms, they will be addressed in detail. However, the concepts required in preparing for hurricanes also apply to all local storms.

Any tropical disturbances along the Atlantic Coast can be considered a threat to the Chesapeake Bay region and the State of Maryland. The conventional path for these storms is northerly, however, these paths are not always the pattern. Unexpected cold fronts can stall the forward movement of a storm and allow it to strengthen over warm waters. Other weather patterns can cause storms to meander, such as the 1984 hurricane DIANA east of Wilmington, North Carolina. This storm wandered in the Atlantic for several days before taking the normal northerly course.

The passage of a hurricane strongly affects an area exceeding fifty miles across. Winds build rapidly, up to speeds approaching 150 mph. Tornadoes can be associated with these hurricanes, bringing their own wind threat. Other weather hazards usually accompany hurricanes. Ten to twenty foot storm surges are not uncommon. Rainfall of up to 24 inches a day can add even more water to the already rising waterways. These combinations of high winds and rising water can be devastating.

Hurricane BOB passed the Maryland coast in 1991 before coming ashore on the New England Coast. This storm made landfall as a Category 2 hurricane and caused considerable damage in New England. Landfall in New England of a hurricane like BOB only emphasizes the possibility that a hurricane of this severity is certainly a threat to Maryland.

Hurricane HUGO, a Category 4 storm, struck the Charleston, South Carolina area on September 22, 1989, and demonstrated just how destructive these forces can be along the Atlantic Coast. Hundreds of homes were destroyed or moved from their foundations. Thousands of boats were destroyed and/or left high and dry on

land many miles from their moorings, and most marinas in the area incurred some degree of damage. The impact HUGO had on marinas in the Charleston area is illustrated by the following examples.

- Timber piers failed in many cases; decking was torn away from nailers with nails intact.

- Gangways for floating docks were either pulled from their mooring or twisted away from their hinges.

- Floating docks, in some cases, floated over top of their piles with the dock pile guide still intact on the dock. Others were lost from pile guide failures, broken piles, or knockdown.

- Drystack facilities collapsed with substantial damage to boats and to the rack facilities.

- Ocean front retaining walls were severely damaged from the tidal surge, wave action and wind. Concrete walls were torn from their anchor rods. Wooden walls were completely twisted away after the surge washed the back-fill from behind them.

- Landside facilities such as phone booths, signs, trailers, light poles, ice machines, vending machines and antennas suffered substantial damage from wind. Tidal surge ruined a number of lockers, transformers and fuel pumps. Many structures sustained damage; some lost their roofs entirely.

- Failure of utility lines followed failure of gangways or retaining walls. This can be extremely hazardous due to the potential fire, gas and oil leakage, sewage contamination, hazardous chemical spillage, etc.

The location of your property relative to the path of the storm will determine the degree of force and damage you can expect to experience. You can plot the storm's path from National Weather Service reports. The winds in a hurricane are counter-clockwise, and the greatest wind speed, tidal surge, and the most intense rainfall will be to the right of the storm's eye when looking in the direction of its path. Depending upon the storm's intensity, the maximum tidal surge will also be 15 to 20 miles to the right of the center of the hurricane's "eye" (figure 1).

The left semi-circle of the storm as you look in the direction of its path has less force than the right side, but is still dangerous. Should the storm pass directly over you, you will experience the winds reducing to minor gusts within the "eye" until the "back side" of the hurricane arrives. When this happens the winds will reverse direction and will be at or near the intensity experienced on the front side of the storm. It may take as long as 30 minutes for the "eye" of the storm to pass over you. However, when the southeast quadrant or "backside" of the storm does arrive, the hurricane winds will reverse and change direction of wave action. This will change the direction of wave action against moorings and reduce water depth (figure 2).

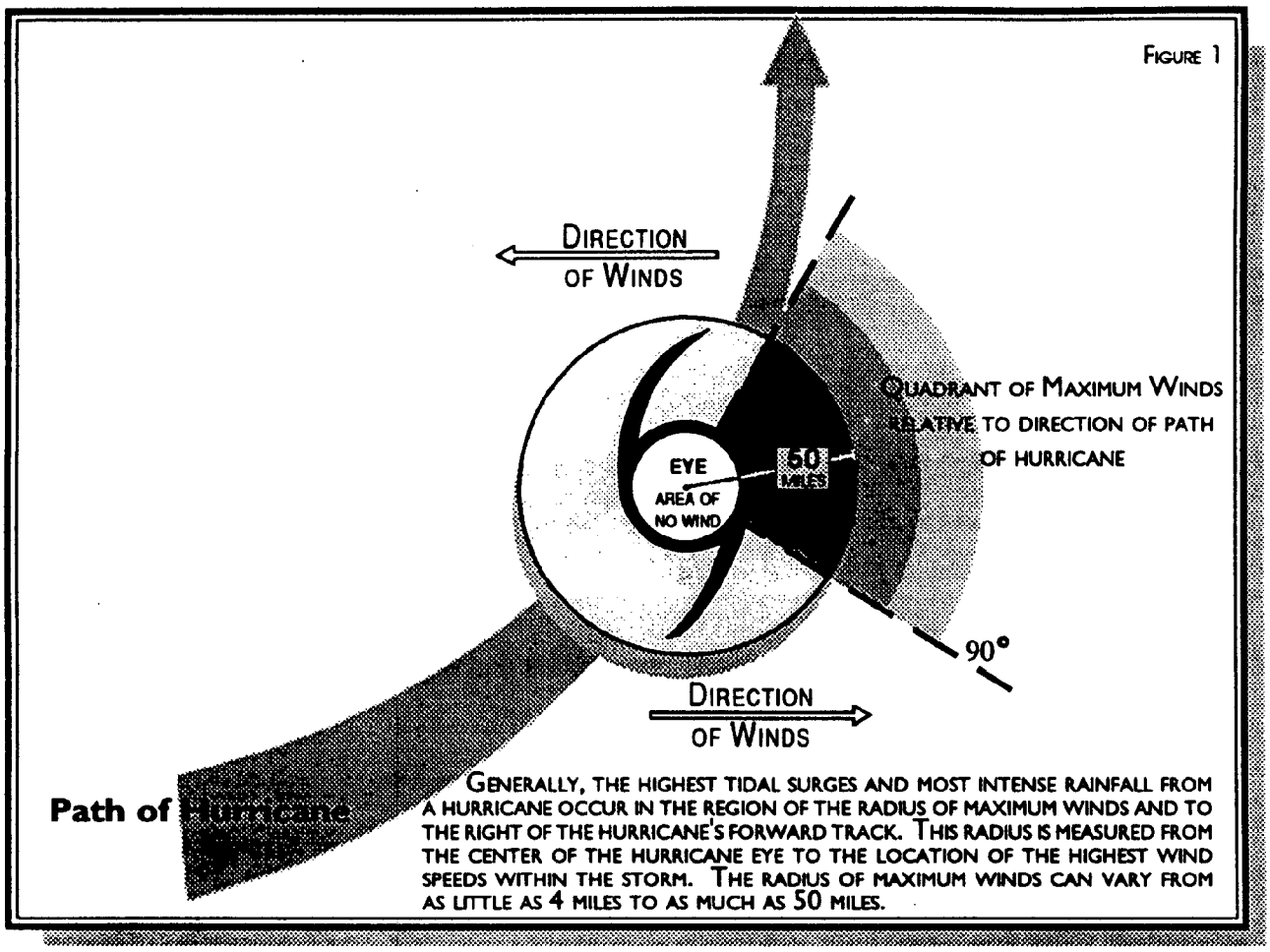
Figure 1
Direction of Winds
Quadrant of Maximum Winds relative to direction of path of hurricane
Eye
Area of No Wind
50 miles
90°
Direction of Winds
Path of Hurricane
Generally, the highest tidal surges and most intense rainfall from a hurricane occur in the region of the radius of maximum winds and to the right of the hurricane's forward track. This radius is measured from the center of the hurricane eye to the location of the highest wind speeds within the storm. The radius of maximum winds can vary from as little as 4 miles to as much as 50 miles.

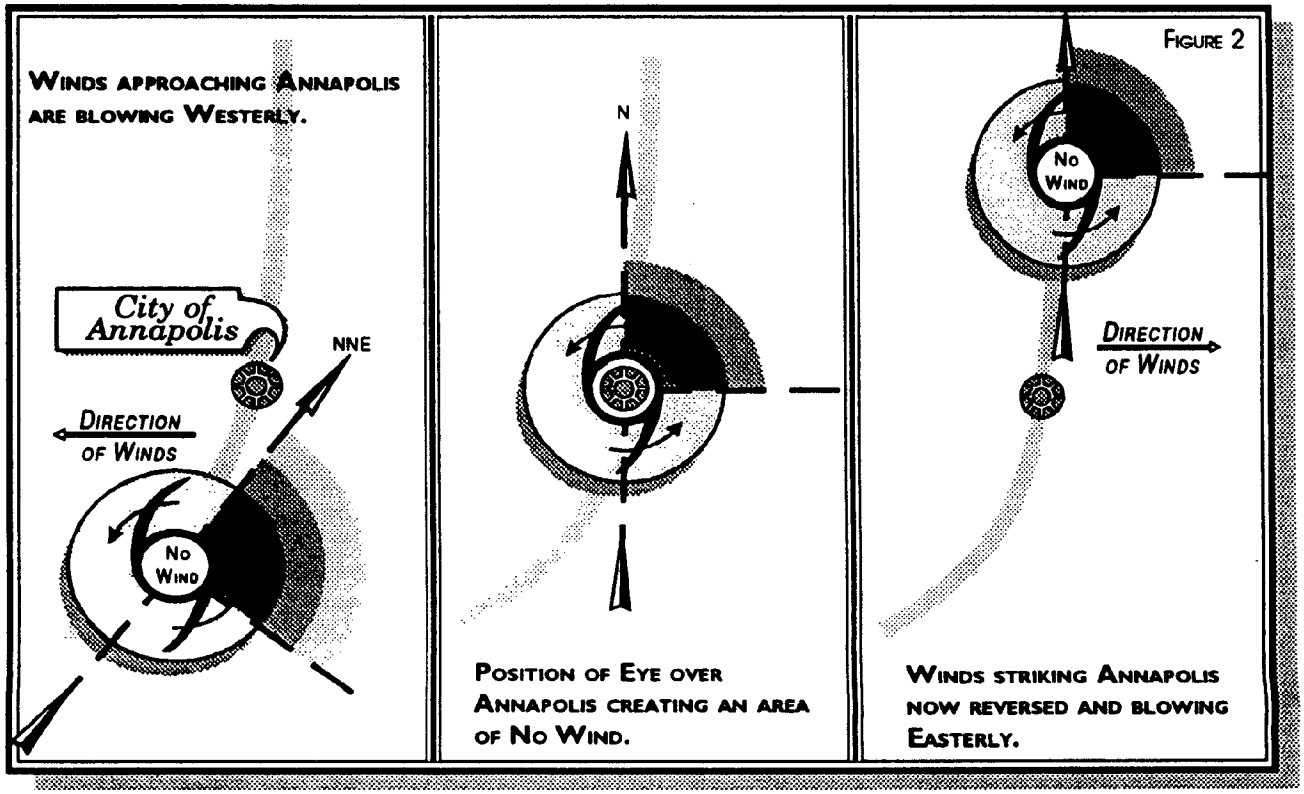
Figure 2
Winds approaching Annapolis are blowing Westerly.
City of Annapolis
NNE
Direction of Winds
No Wind
N
Position of Eye over Annapolis creating an area of No Wind.
No Wind
Direction of Winds
Winds striking Annapolis now reversed and blowing Easterly.

CHAPTER TWO

Why A Severe Weather Plan

HAVING A PLAN

The best way to minimize the destructive forces of hurricanes and other violent storms ... to reduce severe weather losses ... is to have prepared in advance and use a **SEVERE WEATHER PREPAREDNESS PLAN.**

A marina severe weather preparedness plan should be based upon a wide variety of factors including: the location of the marina and its vulnerability to wind, storm surge, current, wave and debris damage; the type and condition of structures present (breakwaters, fixed docks, floating docks, dry storage racks, etc.); and the availability of nearby locations that may provide more sheltered anchorage.

In formulating and using a plan, there are five key elements a marina operator should keep in mind:

- Identifying and assigning responsibilities to individuals for carrying out the plan.
- Making sure that everyone associated with carrying out the plan has been trained to implement it, especially the marina employees.
- Educating the boat owners about the plan, severe weather hazards and the correct methods for securing and/or relocating their boats, depending upon the particular situation.
- Implementing the plan as early as possible. Do not wait until weather conditions deteriorate and it is no longer possible to carry out the plan.
- Quickly and efficiently cleaning up after the storm. This means boat owners must be ready to act quickly as well.

In some cases, local boat relocation plans have been developed and areas of storm refuges have been identified. Storm refuges are also identified in waterway guides, sailing directives and other local publications. Marina operators and boaters should be familiar with these plans. Where they exist, a marina's severe weather preparedness plan should be coordinated with them.

In areas where no such boat relocation plans exist or where areas of storm refuges have not been identified, calling for the relocation of boats from a marina presents a more difficult situation. Many boat owners may not move their boats at

all, if they don't know where to move them. Boats from other marinas may try to tie up in the slip just vacated. Transient boaters in the area who want to ride out the storm at a marina will need information on evacuation routes and the location of emergency shelters.

A marina owner should anticipate these problems and discuss them with his/her attorney and insurance agent. Marina slips operated as condominiums will also have to be addressed. Any steps the marina will (or will not) take to secure or move boats should be spelled out clearly in the slip rental agreement.

If boats are allowed to remain in the marina during a severe storm, they are to be secured properly, by either the boat owners, owners' representatives or marina employees. One loose vessel can be a destructive force to other boats and to the marina itself.

MAKING IT WORK

A plan must be activated early so that it can be fully implemented. All marina preparations should be completed prior to the expected arrival of sustained gale-force (39 mph) winds. Weather conditions may deteriorate, and work may become dangerous or impossible many hours in advance of storm landfall. Boaters evacuating a marina should realize that in most areas draw bridges will not open once winds reach gale force (39 mph) and/or once a land evacuation has been ordered. Those that wait to relocate their boats may find their prearranged spot taken by someone else or may find chaotic conditions along the route they must travel. The plan should take into consideration that the marina employees have to prepare their homes as well. Have them develop their own plan for their homes and families, and allot them time to do this within the severe weather preparedness plan.

CLEAN UP

Upon returning to the marina following a storm, the marina manager may discover many boat owners, insurance adjusters, surveyors, contractors, media personnel and sightseers there. A plan should anticipate this and deal with it. The marina manager may want to work with boat owners beforehand to develop a list of adjusters, surveyors and contractors that will be allowed on site after the storm. Each of these should know the plan ahead of time so they understand how it will affect their work.

Emotions can be expected to run high during the aftermath of a storm. So plan to reduce confrontation and to ease the recovery process.

ECONOMIC INCENTIVES

Improved preparedness and design do not come easy. Improving your marina's ability to withstand severe weather may require a significant investment of time, effort, and money.

You can, however, expect a significant return on you investment, in the form of:

- Reduced insurance premiums.
- Reduced damage to marina facilities.
- Reduced business interruption.

On the other hand, you may not be able to afford the cost of "doing nothing" when it comes to severe weather preparedness. You will be faced with:

- Increased risk of liability litigation for client losses as a result of inadequate preparedness.
- Increased storm damage to your marina as a result of inadequate preparedness.
- Potential fines and civil penalties, plus clean-up cost, for oil, sewage or chemical contamination as a result of inadequate preparedness.

Information on improving marina design to decrease the possibility of storm damage is included in Chapter 5.

MARINA INSURANCE CONSIDERATIONS

Your marina's insurance is normally underwritten with consideration to fire, casualty, liability and the associated hazards. A secondary provision, storm/flood damage, is considered but is not as well quantified and, in general, depends upon your location and local topography. The normal insurance coverage for fire, casualty, etc. is available from many underwriters who also may or may not provide flood insurance. Insurance coverage for damage associated with high winds and flooding is partially incorporated within flood insurance, but it is not as simple as it sounds. Each marina owner/operator should consult his or her insurance agent to ascertain that coverage is adequate. Business interruption insurance should be considered when developing the above coverage.

Flood Insurance Considerations

The National Flood Insurance Program (NFIP) is a federal program enabling property owners to purchase insurance protection against losses from flooding. Congress established the NFIP with the passage of the National Flood Insurance Act

of 1968 and the Act was modified and further broadened with the Flood Disaster Protection Act of 1973. NFIP is administered by the Federal Insurance Administration (FIA), a component of the Federal Emergency Management Agency (FEMA).

Cooperating communities throughout the State of Maryland are participating in the NFIP and have had studies completed which identify flood plain areas for insurance purposes. The marina owner should consult with his/her insurance agent to ascertain if flood insurance is required for the area.

Tenant/Boat Owner Insurance Policies and Agreements

Some boat owners may not carry insurance. It is important for a tenant to have a comprehensive yacht insurance policy. This will allow timely salvage operations to be conducted by the boat owner or his insurance representative, provide resources for payment of salvage contractors and minimize potential for claims against the marina for damage to the boat.

In addition to assuring that all boaters carry hull and liability insurance, the marina owner/operator should attempt to reach a special emergency operations "hold harmless" agreement with each boat owner. This agreement holds the marina harmless for accidental damage caused when the marina takes emergency steps before or during the storm. It also holds the marina harmless for work done by marina or salvage contractors. The agreement does not cover intentional sinking, setting a boat adrift or other acts by the marina that clearly increase the potential for damage. Normal marina operations can resume sooner if all tenants carry a twelve month marine insurance policy and if an endorsement, like the one below, is added prior to the storm. Immediately after the storm, the marina owner/operator should be available to assist boat owners' insurance representatives. Most carriers are prepared to expedite salvage efforts. Normally, salvage operations should not be undertaken independently by the marina.

> Notwithstanding any other provision of this policy, the company agrees to hold harmless the _____ (marina), its officers, members and employees, for any accidental damages occurring during, or resulting from, actions taken while conducting emergency storm preparation and salvage operations. Emergency storm preparation and salvage operations include any activity which the _____ (marina), harbor master or the _____ (marina) officers deem necessary to protect persons from injury or property from damage other than intentional acts that clearly increase the potential for damage to the insured boat such as sinking or setting adrift.

The marina owner/operator should also establish a prerequisite requirement for each boat owner using his/her marina to provide details of the owner's responsibility in the event of an impending storm. The following requirements should be included:

- Familiarity with and commitment to marina's severe weather preparedness plan.
- Knowledge of who is notified and how.
- The owner's responsibility for securing the boat, storm mooring, hauling, etc.
- Initial steps to be taken if the owner cannot be reached.
- Removal of gear from boat and dock box.

No advance preparation can be 100% effective. However the marina that can survive a severe storm will also survive other hazards. As alluded to by many insurance underwriters and agents, when visiting or inspecting a marina one can normally tell if it is a well run operation by the attitude, experience, and maintenance and upkeep. An uncaring attitude will increase damage potential. The experienced owner/operator has a high regard for the hazards of poorly secured boats and high winds. A well maintained and well kept marina provides the resident boat owner with a sense of security and trust for his property.

Chapter Three

Hazards Of Severe Weather

THUNDERSTORMS, NORTHEASTERS, TORNADOS, & HURRICANES

The majority of marinas in the State of Maryland are located on the waters of the Chesapeake Bay, its estuaries and rivers, and the sounds and bays along the Atlantic Ocean. Because of their proximity to these large expanses of water, they are more susceptible to the severe weather experienced on these waters, especially hurricanes.

Severe weather conditions which effect Maryland marinas include thunderstorms, northeasters, tornados and hurricanes.

Thunderstorms are created when warm, moist air rises, cools and condenses. It swells into mounds of thick, billowy cumulus clouds that quickly darken into the towering, ominous-looking, anvil-shaped, cumulonimbus clouds characteristic of thunderstorms. The transition from a small cloud to a turbulent, electrified storm front can occur in as little as 30 minutes. Strong, gusty winds and heavy rains with thunder and lightning will soon follow. Fortunately, few thunderstorms last more than an hour.

The sharper, darker and lower the front edge of the cloud, the more severe the storm. The anvil-shaped top of the storm cloud points in the direction the storm is traveling.

Thunderstorms usually follow hot, humid weather. In summer, afternoon thunderstorms are likely to occur over water when the humidity and temperature ashore are high. Hot air radiates upward from land surfaces heated by the sun. Moisture from a nearby body of water is absorbed by the warm air, which rises to begin the formation of thunderheads. They usually appear as swift-moving black clouds, often approaching from the southwest, south or west at speeds of 25-35 knots.

Thunderstorms, on the average, occur 30 days per year at any location in the eastern part of Maryland and 40 days per year at locations in the west. Hail associated with these thunderstorms occurs on an average of 1 day per year at locations in the east and 2 days per year in the west. Severe, devastating hail-storms average one every five years. On April 29, 1939 a thunderstorm began dropping golf ball to hen egg size hail stones along a path 20 to 25 miles wide. The storm went 110 to 115 miles and traveled from the District of Columbia to Sussex County, Delaware. This storm caused an estimated damage of $100,000 (1938 dollars). Thunderstorms, when accompanied by lightning, pose another element of danger, known as an electrical storm, to the marina and the boats docked there. An electrical storm is characterized by the flashes of lightning and the corresponding clap of thunder, and lightning will normally strike the highest point under the cloud.

Lightning can lash out for miles in front of a storm, and it can strike after a storm seems to have passed.

Lightning statistics kept since 1959 rank Maryland 6th in the Nation for lightning deaths! Of the 111 recorded lightning deaths during the 30 years from 1959 to 1989, eighty-one were attributed to a jetliner crash near Elkton, Maryland on December 8, 1963. The aircraft exploded in air and was believed to have been struck by lightning. Maryland ranked 24th in the Nation for lightning injuries reporting 114 injured in the 30 year period. Below is a breakdown of the state's lightning statistics:

By Month	Deaths	Injuries	By Location	Deaths	Injuries
May	4	35	On/Near Water	13	15
June	5	17	Open Spaces	9	45
July	8	34	Under Trees	5	16
August	11	20	Near Heavy Equipment	0	4
September	1	6	Golf Course	0	3
October	1	2	On Phone	0	1
November	0	0	Other	84	30

(No deaths or injuries occurred in January through April)

Northeasters occur when a low pressure area builds along the Atlantic coast and moves on its natural northerly course. The wind force from these storms can build to hurricane strength. At Ocean City, the most destructive storm of record was a northeaster which struck in March of 1962. These storms build slowly and sometimes last for days, causing heavy flooding, erosion of the beaches and severe wind damage.

Severe thunderstorms, tropical storms, and hurricanes may spawn tornados or water spouts within the squall line of the storm. Considerable destruction attributed to hurricane force winds actually is caused by tornados. This is believed to be the case with storm damage in the wake of Hurricane HUGO in the area of Lake Norman near Charlotte, North Carolina.

Ninety-seven tornados have been reported within the State of Maryland from 1950 to 1989 with 2 deaths recorded and 42 people injured. The most recent death occurred on May 8, 1984 when at least 3 tornados occurred in Maryland on the same day. Eighteen people were injured in Maryland on this day and 15 people were

injured in a town in Virginia. Records dating back to 1916 show that there have been 31 deaths attributed to tornados in Maryland.

Since 1871, 107 hurricanes and tropical storms have affected Maryland. Yet no hurricane has made initial landfall into Maryland during this time period. Two tropical storms, however, have made the coastline of Maryland, one in November of 1893 and one in September of 1943. Despite the lack of hurricanes making initial landfall, damage from hurricanes over the years has been extensive.

In August 1933, a hurricane made landfall on the northern coast of North Carolina and passed over Norfolk, Virginia and proceeded toward Washington, DC. The brunt of its force came up the Chesapeake Bay, and caused 18 deaths and $17 million in damages in Maryland (1969 dollars). HAZEL followed in 1954 and produced wind gusts near 100 mph as it crossed the state, and CONNIE in August 1955 came right up the Chesapeake Bay producing record rains. DORIA narrowly missed making landfall in 1967, and AGNES in June of 1972 crossed the state causing 21 deaths and heavy damage. ELOISE in September of 1975 produced 6 to 14 inches of rain over Delaware, and DAVID spawned 7 tornados over Maryland and Delaware in September of 1979.

The occurrence of hurricanes by months are:

January	0	May	0	September	43
February	1	June	8	October	21
March	0	July	5	November	1
April	0	August	27	December	1

During the last two decades the coastal population in the United States has been increasing while the number of hurricanes striking the coast has declined. This has had a two fold effect. One, the number of structures exposed to dangers of hurricanes has increased which increases the potential destruction from any one storm coming ashore. Second, it exposes a greater number of people to the dangers of the storm. The combination of these factors is illustrated in Figure 1 which shows that property damage spiraled upward in tandem with the coastal population until the last two decades when it leveled off. In fact, if it had not been for the more than $7 billion loss caused by Hurricane HUGO in 1989, a significant decrease in losses would have been noted.

Figure 2 shows the loss of life during this period. This figure clearly demonstrates the improvement in the effectiveness of hurricane forecast, warning, and response programs since the turn of the century.

TYPES OF HAZARDS FROM SEVERE STORMS

Severe storms including thunderstorms, northeasters, and hurricanes can develop several hazardous phenomena to persons and property. These hazards include but are not limited to the following:

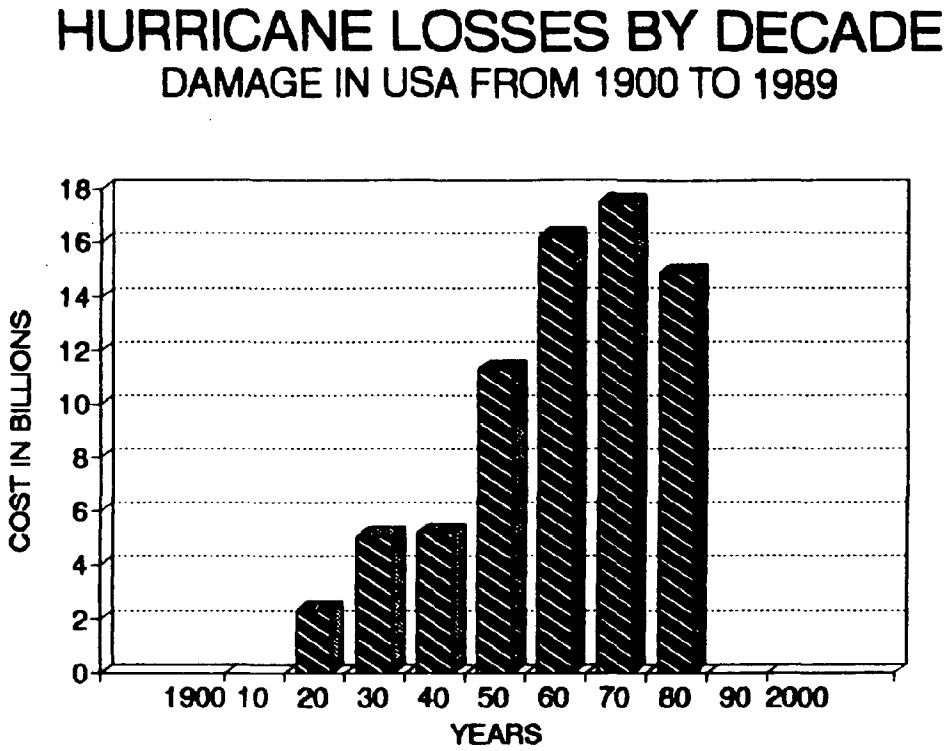

Figure 1

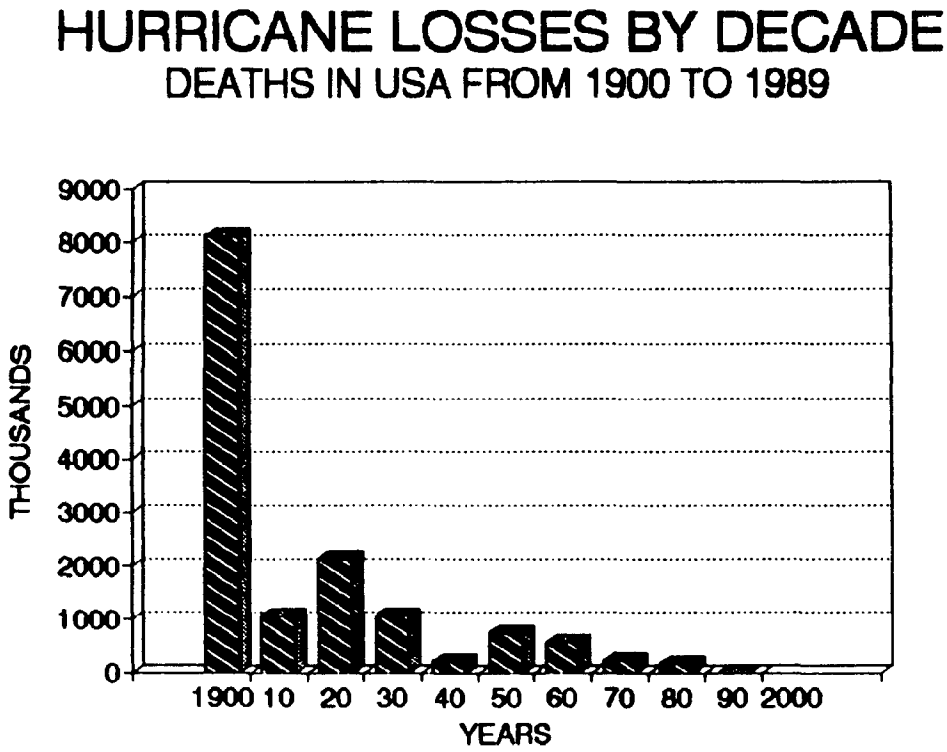

Figure 2

Flooding - This poses the most significant threat to life and property. The storm types indicated above may bring heavy rainfall, usually in a very short period of time.

Storm Surge - The storm surge is a great dome of water that comes sweeping across the coastline near the area where the eye of the hurricane makes landfall. The stronger the hurricane, the higher the storm surge will be. This surge is in addition to a high tide and wind generated waves which also develop. This surge may be from 50 to 75 miles in diameter around the center of the storm and will cause severe flooding, beach erosion and structural damage as the storm moves along or crosses a coastline. Storm surge flooding occurs slowly at a rate determined by the speed of the storm. A storm surge can be associated with northeasters as well as hurricanes and tropical storms.

Seiche - Seiche occurs when the mound of water, developed by the storm winds or changes in the pressure, is released during the approach of the storm center due to changes in the bottom topography or coastal configuration. Water cascades along low lying coastal areas in a series of giant waves, flooding these areas in a matter of minutes. One of the most damaging seiche occurred on June 26, 1954, when a 10 foot high seiche struck 25 miles of the Lake Michigan shoreline. Eight people were drowned by the wave, which apparently was caused by a sudden rise in air pressure.

Wind - High winds may develop pressure against structures that can cause structure failure, and may generate waves and high water which lead to flooding. This flooding can often cut off escape routes out of the area. Storm winds cause death and property damage.

HAZARDS FROM HURRICANES[1]

Along our Atlantic and Gulf coast, the typical hurricane season lasts from June through November. Early in this season, the western Caribbean and Gulf of Mexico are principal areas of origin. In July and August, this center begins an eastward shift; by early September a few storms are being born as far east as the Cape Verde Islands off Africa's west coast. Again after mid-September, most storms begin in the western Caribbean and Gulf of Mexico.

In an average year, more than one hundred disturbances with hurricane potential are observed in the Atlantic, Gulf, and Caribbean; but on an average only 10 of these reach the tropical storm stage, and only about six mature into hurricanes. On average, two of these hurricanes strike the United States, where they kill from about 50 to 100 people somewhere between Texas and Maine, and cause hundreds of millions of dollars in property damage. In a worse-than-average year, the same storms cause several hundred deaths, and property damage totaling billions of dollars.

---

[1]NOAA/National Weather Service, Hurricane! A Familiarization Booklet.

Destruction in a Hurricane

Hurricanes are the unstable, unreliable creatures of a moment in our planet's natural history. But their brief life ashore can leave scars that never quite heal. In the mid-1970's, the hand of 1969's CAMILLE could still be seen along the Mississippi Gulf Coast. Most of a hurricane's destructive work is done by the general rise in the height of the sea, called storm surge.

Winds - Hurricane winds can be the least destructive force, although there are important exceptions like 1971's CELIA, whose high winds did most of the storm's destructive work. These winds are a force to be reckoned with by coastal communities deciding how strong their structures should be. As winds increase, pressure against objects is added at a disproportionate rate. Pressure mounts with the square of wind velocity, so that a tenfold increase in wind speed increases pressure one-hundred-fold. The pressure increase from a category I (74 mph) hurricane to a category IV (155 mph) hurricane is from 18 pounds per square foot to over 80 pounds per square foot. For some structures, this added force is enough to cause failure. Tall structures like radio towers can be worked to destruction by gusty hurricane-force winds. Winds also carry a barrage of debris that can be quite dangerous.

All the wind damage does not necessarily come from the hurricane. As the storm moves shoreward, interactions with other weather systems can produce tornados, which work around the fringes of the hurricane. Although hurricane-spawned tornados are not the most violent form of these whirlwinds, they have added to the toll we pay the hurricane.

Rainfall - Floods from hurricane rainfall are quite destructive. A typical hurricane brings 6 to 12 inches of rainfall to the area it crosses, and some have brought much more. The resulting floods have caused great damage and loss of life, especially in mountainous areas, where heavy rains mean flash floods. The most widespread flooding in United States history (through 1976) was caused by the remnants of hurricane AGNES in 1972. Rains from the dying hurricane brought disastrous floods to the entire Atlantic tier of states causing 188 deaths and some $2.1 billion in property damages.

Storm Surge - The hurricanes' worst killer comes from the sea, in the form of storm surge. (As the hurricane approaches land, it pushes a wall of water ahead of it, called the Storm Surge.) This surge is responsible for nine out of every ten victims claimed by a hurricane and most of the structural damages.

Hurricane surge tide heights are governed by the central pressure deficit, the radius of maximum winds, the storm direction of motion and forward speed, and the ocean depths under the eye of the storm.

As the storm crosses the continental shelf and moves close to the coast, mean water level may increase 15 feet or more. The advancing storm surge combines with the normal astronomical tide to create the hurricane storm tide. In addition, wind waves 5 to 10 feet high are superimposed on the storm tide. This buildup of water

level can cause severe flooding in coastal areas, particularly when the storm surge coincides with normal high tides. Because much of the United States' densely populated coastline along the Atlantic and Gulf coast lies less than 10 feet above mean sea level, the danger from storm surge is great.

Wave and current action associated with the surge also causes extensive damage. Water weighs some 1,700 pounds per cubic yard; extended pounding by frequent waves can demolish any structures not specifically designed to withstand such forces.

Currents, set up along the coast by the gradient in storm surge heights and wind, combine with waves to severely erode beaches and coastal highways. Many buildings withstand hurricane winds until their foundations, undermined by erosion, are weakened and fail. Storm tides, waves, and currents in confined harbors severely damage ships, marinas, and pleasure boats. In estuarine and bayou areas, intrusions of salt water endanger the public health.

SAFFIR / SIMPSON HURRICANE SCALE

Category 1

Winds of 74 to 95 miles per hour. Damage primarily to shrubbery, trees, foliage, and unanchored mobile homes. No real wind damage to other structures. Some damage to poorly constructed signs. Storm surge possibly 4 to 5 feet above normal. Low-lying coastal roads inundated, minor pier damage, some small craft in exposed anchorages torn from moorings.

Category 2

Winds of 96 to 110 miles per hour. Considerable damage to shrubbery and tree foliage; some trees blown down. Major damage to exposed mobile homes. Extensive damage to poorly constructed signs. Some damage to roofing materials of buildings; some window and door damage. No major wind damage to buildings. Storm surge possibly 6 to 8 feet above normal. Coastal roads and low-lying escape routes inland cut by rising water 2 to 4 hours before arrival of hurricane center. Considerable damage to piers. Marinas flooded. Small craft in unprotected anchorages torn from moorings. Evacuation of some shoreline residences and low-lying island areas required.

Category 3

Winds of 111 to 130 miles per hour. Foliage torn from trees; large trees blown down. Practically all poorly constructed signs blown down. Some damage to roofing materials of buildings; some window and door damage. Some structural damage to small buildings. Mobile homes destroyed. Storm surge possibly 9 to 12 feet above normal. Serious flooding at coast and many smaller structures near coast destroyed; larger structures near coast damaged

by battering waves and floating debris. Low-lying escape routes inland cut by rising water 3 to 5 hours before hurricane center arrives.

Category 4

Winds of 131 to 155 miles per hour. Shrubs and trees blown down; all signs down. Extensive damage to roofing materials, windows, and doors. Complete failure of roofs on many small residences. Complete destruction of mobile homes. Storm surge possibly 13 to 18 feet above normal. Major damage to lower floors of structures near shore due to flooding and battering by waves and floating debris. Low-lying escape routes inland cut by rising water 3 to 5 hours before hurricane center arrives. Major erosion of beaches.

Category 5

Winds greater than 156 miles per hour. Shrubs and trees blown down; considerable damage to roofs of buildings; all signs down. Very severe and extensive damage to windows and doors. Complete failure of roofs on many residences and industrial buildings. Some complete building failures. Small buildings overturned or blown away. Complete destruction of mobile homes and to lower floors of all structures less than 15 feet above sea level. Low-lying escape routes inland cut by rising water 3 to 5 hours before hurricane center arrives.

CHAPTER FOUR

Lessons From Hurricane Hugo[2]

Hurricane HUGO was one of the worst storms of the century to strike the east coast. The storm tracked a northwesterly course through the Atlantic and made landfall along the coast of South Carolina at approximately 12 am on 22 September 1989, two hours before high tide. This was a Category 4 storm with sustained winds of 135 mph and gusts reported as high as 175 mph.

The National Hurricane Center forecasters underestimated its strength as it approached the coast. During the 24-hour period before landfall, HUGO's highest sustained winds rose from 105 mph to 135 mph. During this period the wind forecast in all of the public advisories was: "little significant change in strength is likely". Just twelve hours before the storm made landfall, the storm's winds were reported by the Weather Service at 110 mph.

As HUGO moved inland, it maintained hurricane force winds until it passed Columbia and Shaw Air Force Base outside of Sumter, South Carolina, while Charlotte, North Carolina was subject to 69 mph sustained winds with gusts up to 90 mph.

SOUTH CAROLINA MARINA FACILITIES

In 1989 the Statistical Research Department of the National Marine Management Association (NMMA) ranked South Carolina 11th in boating registration in the United States. The majority of this boating population is located at marinas along the coast and in the fresh water lakes. However, there is a distinct difference between the construction of saltwater and freshwater marinas. The freshwater marina docks are usually light wood construction, utilizing ten-inch wood piles for anchoring, while the coastal marinas are constructed of floating docks, usually of heavy timber, concrete or aluminum construction. Piles in the coastal zone are usually either timber (12-14 inch) or pre-stressed concrete (12-14 inch). Very few steel piles are used in construction of marinas in South Carolina. Most of the marinas facilities utilize floating docks as the daily tidal range varies from eight feet at Hilton Head to five feet at Charleston and Myrtle Beach. The coast of South Carolina is flat and the water is often bounded by wide expanses of marsh vegetation. There are few natural marina sites with protection from hurricanes.

Most coastal marina facilities have been constructed in the last ten years with only one, Lockwood Marina in Charleston, being over twenty years old. Lockwood Marina and Georgetown Landing were the only marinas that utilized breakwaters.

---

[2]J.G. Taylor, P.E., Lessons from Hurricane HUGO.

There are many small inland marina facilities that have been in operation for over 20 years.

South Carolina does not have specific marina construction codes or design guidelines, and there are no requirements for a professional design engineer, registered in the state, be involved in the marina design (drydocks do require an engineer's or architect's seal).

MARINA DAMAGES

Drystack Facilities

In a storm with HUGO's windspeed, the metal skin on the drystack buildings does not hold up well. This was also true of other prefabricated buildings with metal skin. Once the metal skin gave away, there appeared to be substantial loads on the roof. The metal skin on all the buildings sustained some degree of damage. Where the skin damage was extensive, the buildings collapsed, causing substantial damage to the boats stored in them and to the rack facility.

Fixed Pier Facilities

The decking on the majority of the piers was torn from the nailers with nails intact or pulled away from the nails. There were many failures in the handrails, and in some cases the vertical members were ripped away from the bolted connections with those connections remaining in the joist. Joist and nailers adequately tied to pile caps and adequately braced at joints remained oblivious to the uplift forces, however it was observed that the horizontal forces of the tidal surge caused considerable bending failures in the joists. Pile caps which were bolted, versus spiking them to the sides of the piles, survived the uplifting forces very well. One prominent failure in joists was the butt and lap joints. Where the joints butted and did not have a metal connector or adequate lap, the joists were dislodged from the joints. This was exacerbated by the practice of locating all joints in a line conveniently over a pile cap. When the uplift force was applied this caused a high failure on the alignment of the joints. Staggered joints fared much better.

Gangways

There were many gangway failures in the marinas as the rising tidal surge pushed the floating docks above their normal design levels. Most fixed pier elevations were set at between 8 and 9 feet mean sea level (MSL). When the tidal surge got above 6.5 feet MSL then the gangways were almost horizontal (6.0 + 1.5 + gangway structure = approx 8 feet MSL). Above that point they were inoperable and began to experience torque and racking that either pulled them from their moorings or twisted them from the hinge mechanisms. There were also problems with high wind loads on the gangways. High wind caused the gangways to fly horizontal and flap in the breeze. This racking of the gangway applied torque-like forces on the hinge connections and caused them to fail.

Retaining Walls

Retaining walls in marinas survived the hurricane very well. Those retaining walls that were on the ocean front sustained severe damage from the combined tidal surge, wave action and wind. Many of the observed retaining wall failures were concrete and were torn from their anchor rods at the cap and fell forward. Most did not have weep holes and many did not have caps. Some wood walls failed, but they seemed to have been completely twisted away after the surge washed the back fill from behind them. Many did not use galvanized anchor rods or cables and had rusted severely. Most of the deadman or tiebacks stayed in place.

Utilities and Fuels

The utility lines usually followed the failure of either the gangway or the retaining walls. Transformers and utilities on the floating docks were destroyed when the docks were damaged or lost. Docks that were damaged also had power pedestal damage. Floating fueling facilities fared likewise. There was one observed oil spill that was caused when the tank floated to the top and rotated in place. This resulted in an EPA supervised clean-up that costs the marina operator approximately $5,500. Note: He had no choice in who did the clean up work or how much it cost him.

Landside Facilities

The wind caused substantial damage to landside facilities such as phone booths, signs, light poles, ice machines, soft drink machines, antennas, trailers and prefabricated buildings. The tidal surge ruined a number of freezers, lockers, transformers and landside fuel pumping facilities. Structures, especially those with canopies, sustained damage. Many roofs had shingles blown off, were hit by falling trees, or lost their roofs entirely.

Floating Docks

The failures to floating docks ranged from failures of pile guides to complete failure of dock systems with the boats intact. The commercial dock systems fared better than the local contractor manufactured dock systems. Some of the dock systems failed from wind loads transferred to them from the boats that were moored at the dock. There were instances where the owners of very large boats would not move their boats and these larger boats caused the floating docks to fail. These boats broke away and caused substantial damage to other docks. In one instance a floating tire breakwater came loose from its anchors and crashed into a marina, setting up a domino failure of the other docks. The most prominent failure within the dock structures was the connection of the finger to the main walkway. Many docks came loose in modules and floated up on the marshes. Many were retrieved and reused in the rebuilding process. Those with exposed foam flotation did not recover well as the foam, in many cases, was torn from the structure. Encased foam docks were much easier to recover and reuse. There were three prominent failures in the floating dock systems, all related to the anchor piles in the system.

Piling Systems

Many piles were pushed over (leaning) or in the case of concrete piles some were lying on the bottom, indicating that piles did not have sufficient penetration. A similar number of piles were broken. Most of these failures occurred below the mud line. This indicates that the piles had adequate penetration but were not adequately sized. Special Note: For the most part, these two pile failure modes were consistent on the site, e.g. all failures were broken or all were leaning. The piles were still intact but the docks were no longer around. Indications were that either the pile guides failed or the docks floated over the top of the piles. From the observation of the docks, there were a number of pile guide failures. However, by far the majority of the docks had floated over the top while the dock pile guide remained intact on the docks.

CHAPTER FIVE

Marina Design Considerations[3]

RELEVANT TERMINOLOGY

Bulkhead: A wall subjected to varying hydrostatic water pressure plus waves on one side and hydrostatic and soil pressure on the other. Bulkheads can have several failure modes and should be designed by a licensed structural engineer (Sketch 2).

Design Loads: Forces which must be carried by the structure being designed. Vertical loads include the Dead Load (the weight of the structure) and the Live Load (the "extra" load imposed on the structure by people, baggage, etc.). The live load may move about. On floating structures, freeboard is specified under both dead load and live load conditions. The buoyancy of walkways and wooden support beams will apply an upward vertical loading to fixed, pile supported structures when they are submerged. These forces must be addressed for severe storm conditions. Horizontal loadings caused by wind, current and boat or debris impact must be included, and the forces must be applied at the correct location. Under maximum design conditions, such as imposed by a hurricane, the forces would be applied near the top of the pile. The vibratory nature of these forces can have a more detrimental effect than a load applied smoothly in one direction.

Design Period: The projected recurrence period for a storm of a given strength. The design period indicates the probability that a storm of that magnitude may occur in any given year.

Recurrence Period (Yr)	5	10	25	50	100
% Chance in Any Given Year	20%	10%	4%	2%	1%

Fairway: The clear distance between two rows of docked boats which is traversed when leaving or entering a slip. When no strong currents or wind forces exist, the fairway should be 1.5 to 1.75 times the length of the longest docked vessel.

Fetch: The length of water over which wind waves are generated. Longer fetches allow higher waves.

Freeboard: The height of the structure above design water level.

Pile Cap: The device which provides a connection between the pile and the structure being supported by the pile. This is a critical link in the design of pile supported structures because it must transmit all the horizontal and vertical forces to the pile without becoming detached (Sketch 1).

---

[3]Jeff Bliemel, Marina Design Considerations.

Riprap: A protective layer of quarry stone, usually well graded, with a wide size limit and randomly placed to prevent erosion and scour. The size of the stone is dictated by the expected wave energy. In severe wave climates, a larger, more uniform layer of stone called the armor layer may be placed on top of the riprap.

Scour: The removal of underwater material by waves and currents, especially at the base or toe of a shore based structure such as a bulkhead. Scour is increased during severe storm events because the storm surge provides deeper water thus allowing larger waves to reach the bulkhead.

Significant Wave Height: The average height of the highest one-third of the waves of a given wave group.

Storm Surge: A rise in water level above normal levels due to wind stress or, in the case of a hurricane, wind stress plus very low atmospheric pressure. Storm surge can raise water levels 17 to 20 feet causing extreme flooding. The impact worsens because the deeper water levels caused by storm surge allow larger waves to approach and break on otherwise protected structures (Sketch 3).

Tidal Range: The difference in height between consecutive high and low waters. The tidal range for Spring Tides (which occur at or near the time of the new or full moon) is larger than the tidal range for Neap Tides (which occur near the time of quadrature of the moon, ie. half moon points).

Tide: The rise and fall of the water level caused by the gravitational attraction of the sun and moon. Astronomical tides do not take into account the potentially large changes caused by weather. There are several tide water levels that are used as references in marine design and they include:

- MHW - Mean High Water is the average high water elevation over a 19 year astronomical cycle.

- MHHW - Mean Higher High Water is the 19 year average height of the higher high waters of a semi-diurnal tide which exists when an area has two high tides each day rather than a diurnal cycle with only one high water per day.

- MLW - Mean Low Water is the average low water elevation over a 19 year astronomical cycle.

- MLLW - Mean Lower Low Water is the average height of the lower of the two low waters of a semi-diurnal tide cycle.

Waves: Periodic undulation of the water surface normally generated by wind or boat wakes. The three important parameters of waves are wave height, wave period (the time between 2 subsequent wave crests), and direction. Although it seems obvious that higher waves have more energy, it may not be as apparent that long period waves (10 to 15 seconds) have more energy than short period (2 to 4 seconds) waves. Wave data is most often hindcast; that is, computed using known wind velocities over

measured fetches to predict wave heights and period. If available, data taken from wave gages that measure actual wave height, period and direction is much preferred over hindcast techniques. In shallow water, under most conditions, the wave can be no higher than 80% of the water depth.

ISSUES OF CONCERN

In marina design, perhaps the greatest concern lies in the almost total lack of established design standards and building codes nationwide. Design and construction of even the smallest marina is complex, multi-disciplinary and requires a number of considerations combined with a vast array of data requirements. Each facility is site specific, market specific, environment specific and use specific. Proper engineering and design of a marina requires the involvement of licensed design professionals who are experienced in marina planning, design and construction. The lack of established design standards and building codes increases the need for professional involvement.

It is difficult to establish the exact failure mode of structures during a hurricane. The combination of forces is varied and difficult to predict and does not necessarily follow a set of formulas or a laboratory experiment. Only by looking at a number of installations with various types of construction can we begin to identify patterns of failures that are conclusive and translatable into design standards and/or codes. Some design solutions should be obvious and historical in their application, but with new materials, new inexperienced marine design personnel, outdated design guidelines, inexperienced marine contractors, and developers that are attempting to construct marina projects as economically as possible, the need for guidance in marina design has never been greater. The above factors combined with a growing interest in boating and the need to protect boaters, marina investors, marina insurers, adjacent property, and the public at large, make the development of modern marina design standards a top priority.

Assuming that very good design standards and criteria are available and usable by competent marina designers, there are many marina projects that still never have any involvement by registered design professionals. Many of these projects utilize designs developed by contractors or dock builder/manufacturers. Often, building permits and inspections by building officials are not required on marina projects. If inspection is required, the inspectors often do not know what to inspect. They have no code requirements to enforce. Insurance companies are insuring marinas without knowing the standards of the design used. Lending institutions, likewise, know little of the design or the performance potential of marinas.

Environmental and resource agencies are reviewing marina permit applications with little concern for navigation, boater safety, economic feasibility or public access to the water. The location, design, construction and operation of marina facilities is now being determined by agencies that have little knowledge about, or positive concern for, marinas.

The remainder of this Chapter is intended as a preliminary introduction to marina planning and design concepts related to significant storm events. This information shall be useful for inexperienced design professionals, marine product manufactures, new or prospective marina owners and others who wish to become familiar with marina planning and design concepts. It is not a definitive design document, and the writers assume no responsibility for its use.

BASIC PLANNING CONSIDERATIONS

First: Hire a licensed design professional and require her/him to at least review and seal all drawings and specifications provided to you. If possible, let design professionals be involved in the permitting process.

Second: Develop and commit in writing to a specific severe weather operation policy. The design professional should be requested to provide cost/benefit trade-offs during the decision process.

Third: After receiving a written severe weather operations plan the marina design professional should use the best reasonably available technology and judgement to predict design loads that will actually be applied throughout the marina. The design return period on hurricanes should be balanced against the expected life of the marina, and compliance with local codes and ordinances. Keep in mind that codes are **minimum** design criteria and increased strength and reliability may be more economical in the long run.

The recommended design period for hurricanes (wind and tidal surge) is normally 50 years (2% probability, in any given year) and 25 years (4% probability in any given year) should be considered the absolute minimum design period. This is true even if the expected life of the offshore facilities is less than 25 years. Operations plans that assume boats will leave the marina are detrimental and unrealistic. Even if boat owners were willing to remove their boats, they may be unable to get to their boats or they may be prevented from moving their boats due to severe weather or channel obstructions. If they do move their boats, passing transients may dock in the empty slips.

Fourth: In order to protect the public, government agencies have a responsibility to set minimum hurricane planning and design criteria and to require the involvement of licensed professionals in marina design. The marina design professional should exhaust this source in his quest for applicable design data.

Fifth: Dock manufacturers' literature is developed to assist in marketing docks. Claims about performance during past hurricanes can be misleading. Marinas are extremely site specific. Do not rely completely on dock manufacturers literature, especially those that promote standard designs for specific wave heights, wind loads, etc. Dock manufacturers and suppliers should be required to submit design

calculations and documents showing that they comply with site specific marina design requirements. The number of years in the dock manufacturing business, a history of performances in hurricanes and the service provided after the storm are important criteria to consider when selecting and specifying dock manufacturers.

FACTORS TO BE ADDRESSED

Marina Setting: Select sites that offer protection from hurricanes.

Wind: Velocity, direction and duration are critically important in the design of dry stack facilities, and winds also apply forces to docked boats which translates into forces on docks and pilings and other anchor systems. Potential wind blown missiles include dock boxes, signs, dinghies, sheet metal panels from buildings, and all other unsecured loose objects. Navigation of vessels into or out of the marina or the use of marina equipment such as fork lifts may be severely restricted.

Waves: Height and period are important because they determine the force on the dock system as well as on the land/water interface (either bulkheaded or ripraped shoreline). Waves affect not only boats moving into, out of or within the marina but may restrict movement of personnel on docked vessels and prevent access to or from vessels on either fixed or floating docks or swing moorings.

Tides and Storm Surge: The combination of these provide the base elevation to which waves and required freeboard must be added. Begin with the level of high water (Mean Higher High Water, MHHW, is a good choice), and add the increased water level due to storm surge to get the basic starting water level. For example a mean spring tide at Ocean City is +4.2 ft above Mean Low Water plus a 17 ft storm surge similar to that seen in Charleston during Hugo (1989) equates to +21.2 ft. For this extreme example a fixed, pile supported walkway or dock at an elevation of 21.2 ft would be level with the still water level and even 3.0 ft waves would create serious problems for individuals using the facility. In the case of a floating dock, the freeboard of the dock must be added to pile lengths just to keep the dock from floating away! The implications of the combined effects of tide and storm surge on landside facilities at the marina are obvious.

Currents: Currents have the same effect on boats and docks as the wind except that the force is applied to the portion of the boat below the waterline. Currents may vary in both velocity and magnitude due to changing tides. During severe storm events, currents may carry a significant amount of large debris which adds additional impact forces to boats and docks when they are struck.

Soils: Soils must be tested by a licensed soils engineer or geologist to determine horizontal bearing capacity relative to the forces applied by wind

forces on the boats and through the docks. One boring per 10,000 square feet of area may be sufficient but these must be taken in the vicinity of the piles offshore, not at an on-shore location chosen simply for convenience. For fixed pile supported walkways and docks, vertical bearing capacity is required along with the ability of the pile to withstand the buoyant forces of a totally submerged dock system. Soil borings must be deep enough to define the total strata which the piles penetrate, plus at least 5 feet.

Access: Access is of concern during storms for those desiring to leave the marina or seeking shelter within it. Access will be hindered by high, gusty winds, large irregular waves and possibly strong currents carrying much debris. Harbor entrance channel widths should be at least 100 ft and even using these criteria movement into or out of the marina may be prevented by other boats sinking in the channel. Bridges may remain stuck closed down and may be inoperable after the storm.

Basin Planning

Geometry: Because much of the wave energy striking a vertical bulkhead will be reflected, long parallel opposing bulkheads should be avoided. Round corners should be included along bulkheads and sloping banks protected with riprap or paving blocks should be used where possible to dissipate the wave energy.

Dredging Depth: Dredged depths should not be excessive. The excess dredged depth is expensive to dredge, disposal of the material is costly and the increased depth will raise the cost of anchoring the docks because piles will need to be longer (to support the docks) and larger in diameter (to withstand the additional bending moments).

Land Planning

Parking: Anticipate that all boat owners will be spending two or three hours on their boat 24 to 48 hours prior to the storm. One parking spot for each two wet slips for recreational boaters plus two parking spots for each commercial fishing vessel should be adequate unless local building codes dictate otherwise.

Pedestrian Access: Sidewalks, walkways, and gangways should be lit, above water and well marked should they become submerged due to storm surges. Walkways that are expected to become submerged should be well maintained and designed without steps or other obstacles that could pose a tripping hazard when hidden under water. Provide sturdy post on railings to mark the edge of the walkway and to provide handholds.

Ancillary Buildings: An ancillary building should comply with local building codes but should also be protected from impact damage due to flying and floating debris. "Floating debris" could include a 50 ft boat that has broken away from its moorings, a broken pile or a piece of floating dock.

Documents, equipment and supplies needed immediately after the storm to provide security, minimize additional damage and begin recovery should be secured in a safe, dry location. A well designed storm drain system, especially behind bulkheads and seawalls will minimize erosion or possible collapse when the storm withdraws. Buildings should be designed without canopies or wings, and tall trees should be located away from structures. Miscellaneous equipment such as ice machines, drink machines, etc. should be located in structures or in areas that will minimize their potential for wind and water damage. Facilities should be located at elevations higher than the expected tidal surge. Trailers should be secured with hurricane anchors.

Emergency Access: Emergency access lanes should be addressed when laying out the facility. These should be marked in accordance with local fire code requirements.

Channel Entrance & Wave Attenuation (Harbor Protection)

Jetties and Breakwaters: These aids to navigation may provide sheltered water while entering or leaving the area of the marina but the level of protection they afford and even the survivability of the structure itself may be in question, depending on the severity of the storm. To be of value during a severe hurricane the riprap or armor stone must be of sufficient size to protect the structure from the increased design wave height incurred during the storm and the height of the structure must be sufficient to provide the desired wave attenuation. Consider possible overtopping during the storm surge in defining the height of the structure (Sketch 4).

Wave Attenuation: Additional wave attenuation may be required within the marina to maintain an acceptable climate for boaters to move about on their boats in preparation for the storm, especially if long period waves can approach the marina from the open sea by passing straight through the entrance channel (Sketch 4).

Inner Harbor Structures

Basin Perimeter: All basin perimeters must be designed for the selected storm recurrence interval. Bulkheads designed by a licensed structural engineer should withstand the oncoming storm as well as remain intact during the receding tide without excessive scour of the backfill behind the bulkhead, which could cause failure of tie-backs and subsequent failure of the entire structure. The inclusion of bulkhead returns and good drainage through filter cloth and weepholes will reduce scour. As previously mentioned, a sloping armored perimeter has several advantages, including reduced reflection of wave energy, but it also requires additional space within the marina and rough surfaces may pose a hazard to boats.

Fixed Docks: The fixed docks must be designed for vertical and horizontal forces. All fixed structures must be designed to withstand upward vertical forces caused by total submersion of the structure and any connected

appurtenances. Fixed docks and pile supported walkways should use split pile caps bolted with double dip galvanized hardware. Pile caps spiked onto piles will disconnect from the piles when submerged due to uplift forces caused by the buoyancy of the decking, stringers, etc. Dock boxes shaped like polystyrene tubs and securely attached to the fixed walkways will provide additional buoyancy and apply an upward force to either separate the walkway from the pile or pull the pile out of the ground. On fixed, pile supported structures, either a metal connector or adequate lap must be provided in butt and lap joints to prevent the joists from becoming dislodged from the joints. The beam joints should be staggered rather than locating all the joints in a line over the pile cap, which would then act like a hinge rather than a continuous beam. Connection hardware, such as cleats, must be adequately sized for the moored vessel and must be bolted completely through the dock using appropriately sized galvanized or stainless steel hardware.

Floating Docks: When floating decks are in the plans, they should be designed for full slip loading unless there are absolute assurances that the boats will be removed. The design must account for hurricane wind load and storm surge simultaneously with a Spring high tide. If the marina is adjacent to critical shipping lanes or vital installations that might be affected if the floating docks are damaged or dislodged and boats sunk, serious consideration should be given to increasing the design storm recurrence interval. Commercial dock systems may perform better than locally built, contractor constructed docks. In addition, the owner should be aware that the manufactured systems may also lend themselves to easier repair and reinstallation. Ancillary equipment (utilities, dock boxes, etc.) should be integrated into dock systems that will make hurricane preparation and recovery easier (e.g. removable power pedestals, dock boxes, gangways, etc.). Since most failures occur due to pile failures, a licensed professional should assure that the piles are of adequate diameter, have adequate penetration and are of adequate height to account for the high tide, storm surge, wave heights, and adequate freeboard for the dock. Connection hardware sized adequately for the moored vessel and bolted completely through the dock with galvanized or stainless steel hardware is essential.

Moorings: If open moorings are used, both bow and stern moorings should be installed to keep boats properly oriented, reduce swing and provide an additional factor of safety. Proper inspection and preventive maintenance of swing moorings may be more difficult than for fixed or floating docks, but is absolutely essential.

Gangways: High wind loads can make gangways fly horizontal and flap in the wind. The hinge connection on the gangway undergoes torsion and the gangway is subjected to racking forces. Unless gangways are disconnected, the waterside end may be forced above the floating docks and utilities trapped between the dock and the gangway. Utilities should be nested securely under the gangway with a loose loop connection at the bottom to allow movement where the gangway meets the floating dock. The floating dock may be crushed as well but increasing the dock offset may alleviate dock damage.

The gangway hinge should allow for torque from twisting and racking by the gangway during the storm. A better solution might be to put quick disconnect couplings on the utilities and the gangway and remove the gangways just before the storm arrives (Sketch 5).

Dry Stack Facilities: The dry stack facilities must withstand the extreme wind forces exerted on the large but lightweight structure. Tremendous uplift forces are applied to the foundation. Failures begin as the metal skin on the sides and roof peel away leaving the remainder of the structure and the racks to independently withstand the wind loads. Special attention should be paid to uplift forces on the roof structure. Rack supported roof structures may require additional design analysis.

Launch Facilities: Launch facilities may become overburdened with boaters attempting to remove their boats during the inclement weather preceding the hurricane. The inclement weather may require extra time for tie downs and boaters may be shorthanded due to limited time available to get help before the impending storm. Therefore, extra staging areas may be required due to additional loading time. Marine travel lifts may also keep the launch ramp busy, and the inclement weather will hinder travel lift and fork lift operations. Assume that all operations will be at about one-half normal speed during the period of inclement weather before the storm.

Marina Systems

Fueling: Fuel pumps should be installed above the high tide plus storm surge elevation for the selected design storm and fuel tanks must be counter weighted sufficiently so that they will not rise if they become both empty and completely submerged in saturated soil.

Sanitary System: Landside sanitary holding tanks must be designed and counter weighted so they will not float when empty and completely submerged. The cover should be bolted down during the storm to prevent escape of the sewage.

Electric and Communications: Transformers and utilities on floating docks will be destroyed when the docks are lost and associated items such as power pedestals, gas pumps, lights, pump-outs, dock boxes, etc. will also be damaged and lost. Transformers should be located on land whenever possible, and the other items should be removed and stowed. Radio antennas should be designed to withstand the maximum wind velocities expected.

Hazardous Waste: Waste oil, antifreeze, and other hazardous waste areas should be designed to meet the local, state and federal requirements. The storage area should be designed to be above the floodplain.

Other Systems: Trash and Debris containers such as dumpsters should be well anchored and secured to prevent them from floating away and becoming hazards. They will be needed immediately after the storm.

SPECIFIC EXAMPLES

The following comments were extracted from a variety of sources and personal observations over several years. They are but some of the numerous factors that are considered in marina design.

- Dock assemblies are usually connected with bolted semi-rigid joints to act as a continuous beam or are hinged to allow flexibility. Hinges between docks experience damage because motions or forces are applied for which they were not designed.

- Be alert for new materials that offer improved resistance to hurricanes or can be easily repaired.

- All hardware in the marina environment should be hot dip galvanized or stainless steel.

- All piles must be chemically treated or naturally resistant to decay and marine borers, such as Demerara Greenheart (Nectandra Rodioei). Piles should be inspected at six month intervals for decay or rot, cracking or splitting, or wasting away by infestation by marine borers and\or ice abrasion.

- Docking systems should be designed with a balanced approach. This does not preclude designing selected parts to a lower level of strength, allowing certain portions to be sacrificed to prevent total loss of the system.

- When designing fixed, pile supported walkways, the decking should be designed to fail before the handrail fails. The deck structure and piles should be designed to fully withstand the wind, external impact and uplift forces of the storm.

- A failed pile can cause an entire system to collapse. Design piles for the most extreme event.

- When rebuilding, after a hurricane, do not merely replace failed parts and pieces but upgrade piles and other selected structures so that similar failures are prevented or minimized during the next storm.

- If the entire marina cannot be designed to hold the boats during a hurricane, design a portion of the marina to withstand the storm.

- Hurricane protection is a combination of design and operation. What is not covered by design should be covered by the marina operation, evacuation and recovery plans.

- Whatever is not covered by design must be covered by insurance or it is at risk.

- Keep copies of marina permits, design drawings and shop drawings in a secure location.

- Floating breakwaters and wave attenuators are ineffective for wave periods longer than approximately 4.0 seconds.

- Repairability of docks should be a design consideration.

- Small cracks in bulkheads that allow backfill material to escape when overwashed should be repaired using engineering fabric or other techniques, and kept in good condition.

SUMMARY

Some marina failures are inevitable due to the exposure and the dynamic nature of the marina environment. Most observed failures, however, result from inattention to design details, poor layout or marina planning, lack of maintenance, shoddy product manufacture, lack of understanding of what a marina is and who it serves or underestimation of storm effects. A true cost-benefit analysis (Sketch 6) should be made of all marina components and attractive, low first cost products scrutinized as to their suitability for the intended use and environment. (Tobiason, 1989). When considering marina survivability during a hurricane or similar severe storm events, the aforementioned effects are magnified considerably.

RECOGNITION

This chapter was developed in conjunction with:

Jeff Bliemel, Coastal Engineer
SMITH DEMER NORMANN
Six Manhattan Square, Suite 102
Hampton, Virginia 23666

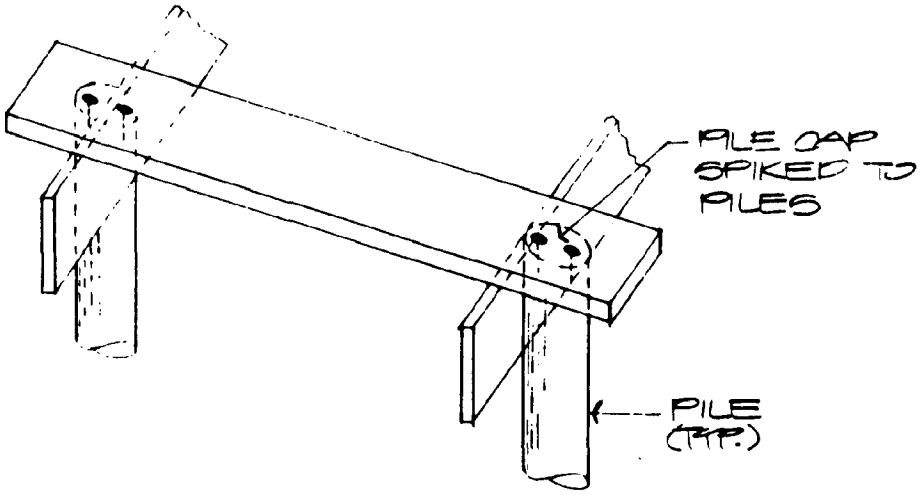

INCORRECTLY MOUNTED

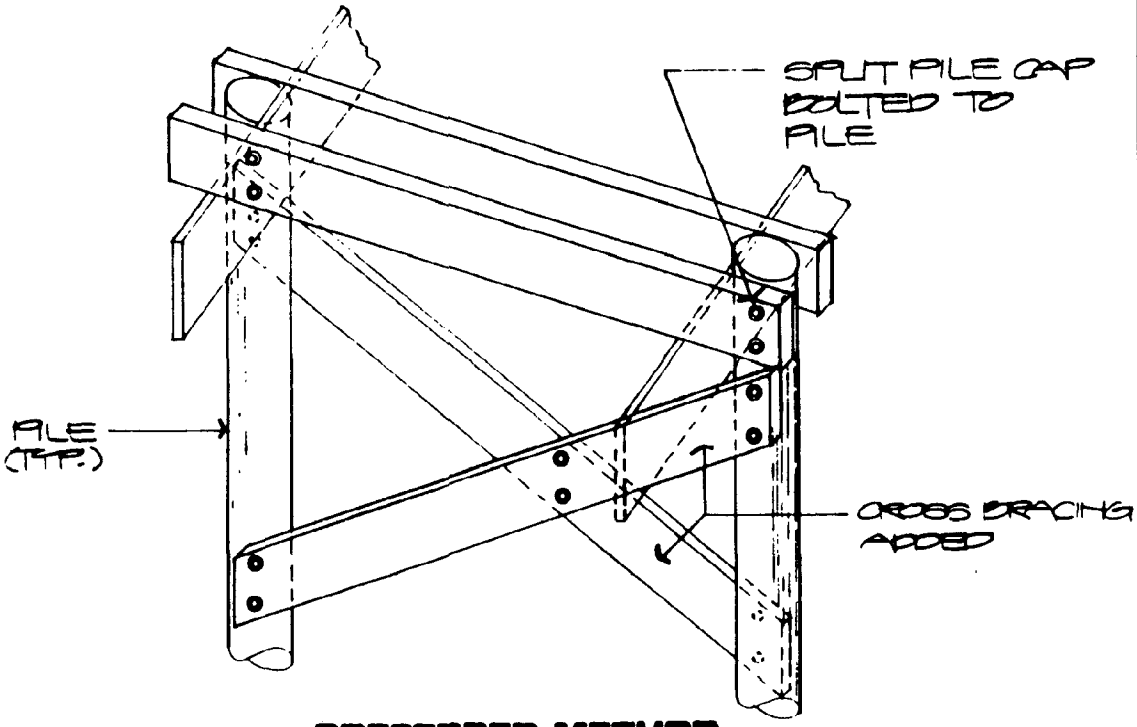

PREFERRED METHOD

PILE CAPS

sketch 1

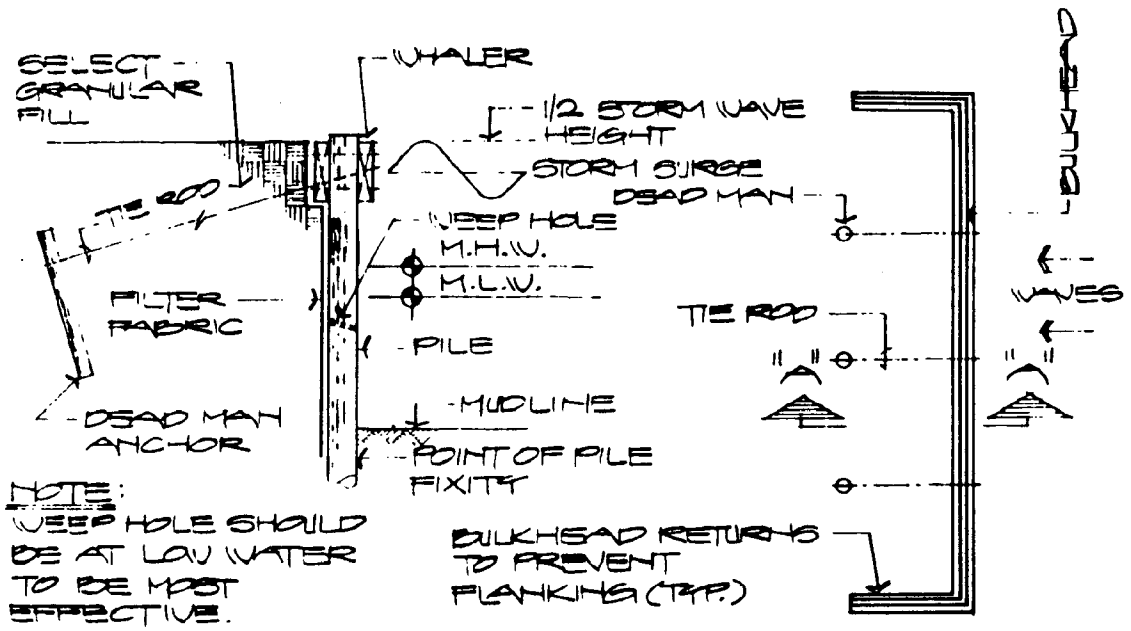

SECTION **PLAN**

BULKHEAD

sketch 2

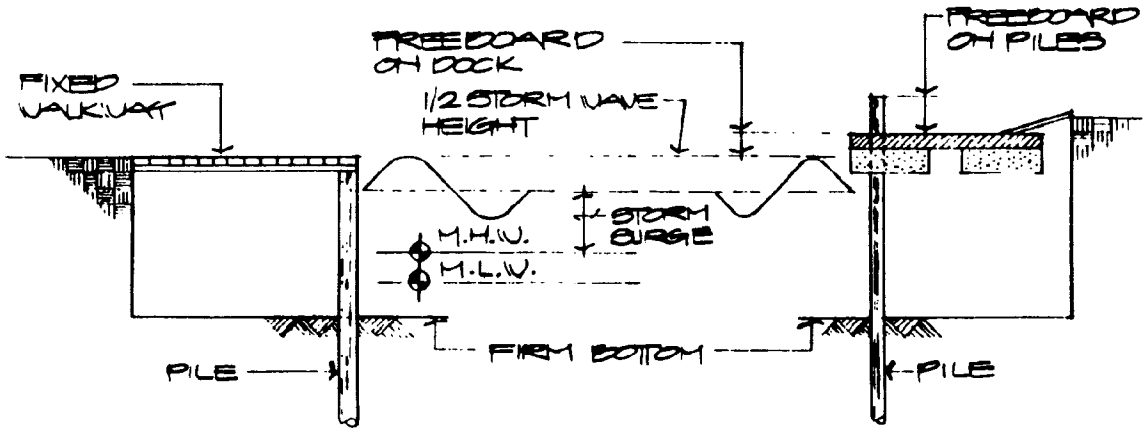

FIXED WALKWAY **FLOATING DOCK**

STORM SURGE EFFECTS

sketch 3

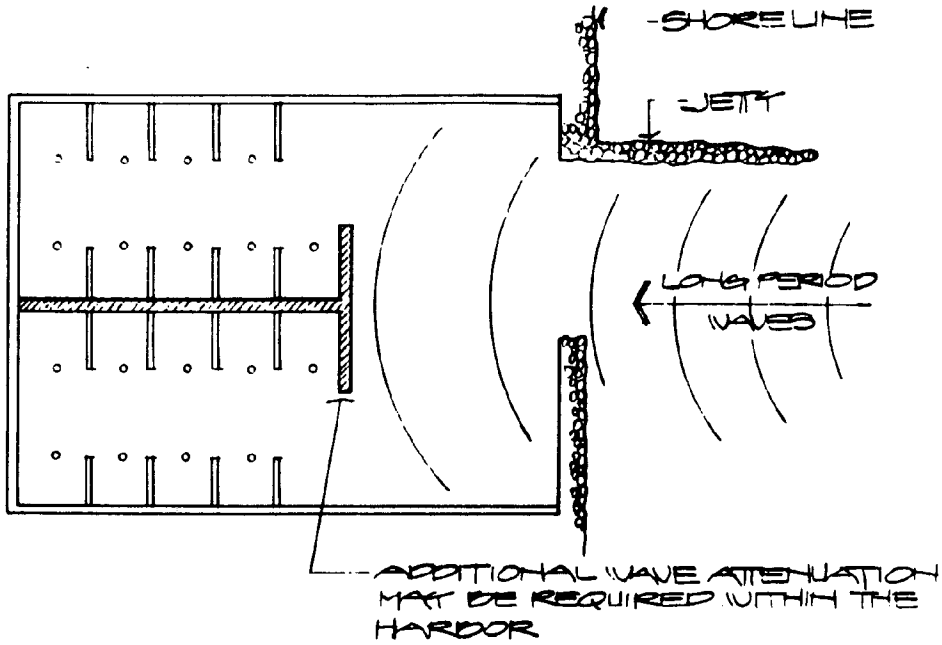

HARBOR PROTECTION

sketch 4

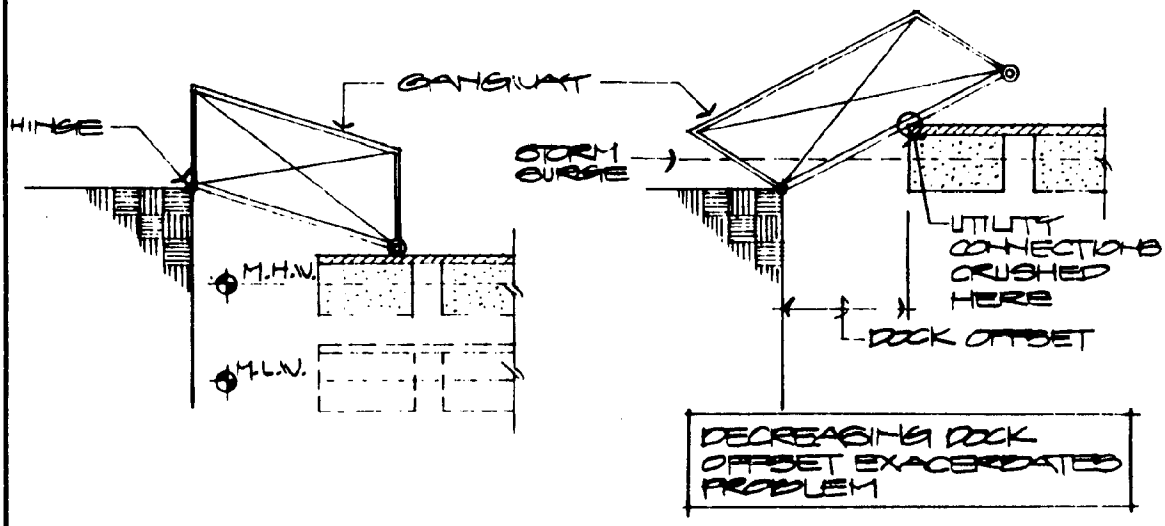

NORMAL CONDITIONS **STORM CONDITIONS**

GANGWAYS

sketch 5

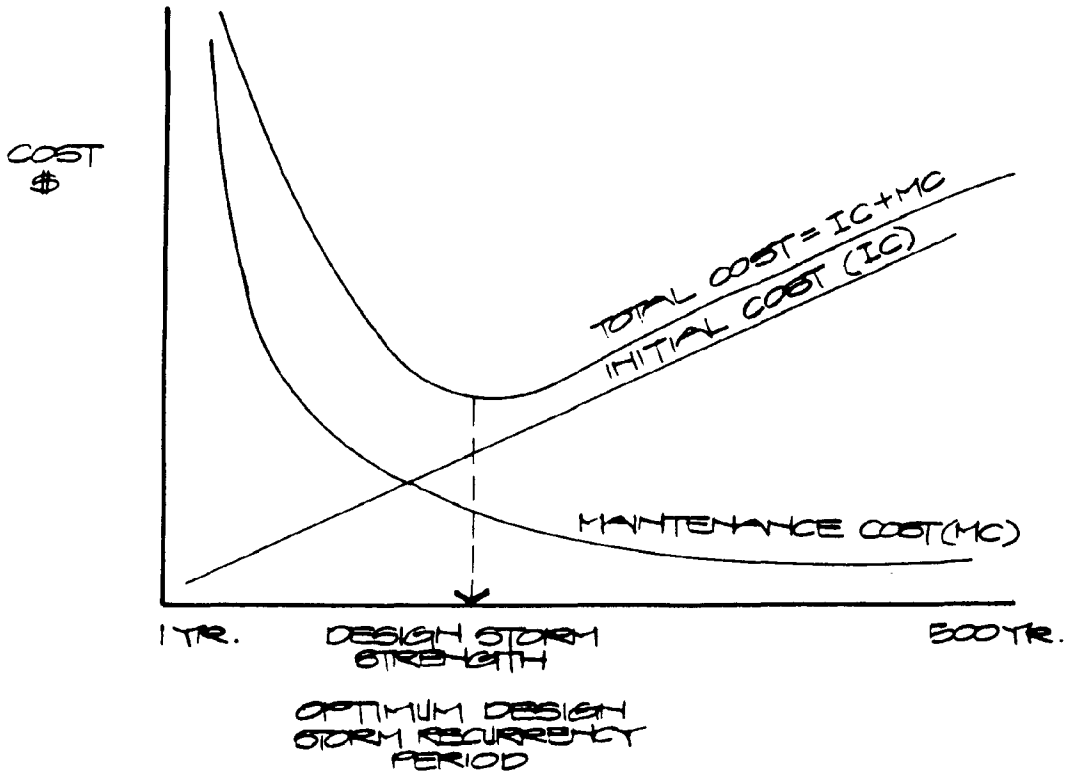

LIFE CYCLE COST RISK ANALYSIS

sketch 6

Chapter Six

Evacuation, Routes, and Shelters

Most extreme events in nature cannot be controlled, yet the human consequences may be affected dramatically by actions taken prior to the event. To evacuate and seek safe shelter when directed by civil defense or emergency management authorities is necessary to save lives.

Hurricanes and severe storms can sometimes be predictable but usually are very unpredictable and normally do not allow much advance forecasting. Hurricanes originate in the tropical latitudes and must travel some distance to reach the latitude of Maryland. At least 72 hours of advance knowledge of a potentially threatening hurricane or tropical storm is publicized and usually known. Conversely, rapidly forming "Northeaster" storms and "Hatteras Lows" in the late fall, winter and early spring can develop and travel to Maryland waters in 24 to 48 hours allowing little advance warning. Storm surge is the abnormal rise in water level caused by the wind and pressure forces of a storm. Storm surge produces most of the flood damage or loss of life associated with tropical storms. The rise of water from storm surge in the Upper Chesapeake Bay can approach 10 feet and in the vicinity of Ocean City along the Atlantic coast can be in excess of 15 feet. Heavy rain and associated run off with the storms compound the flooding problem. Extensive studies by a number of federal and state agencies have provided civil defense and emergency management authorities with detailed guidelines on when to recommend and direct evacuation of local marine areas. Each Chesapeake Bay county and the coastal county of Worcester has an inundation map. These maps show which areas are expected to be inundated by the potential worst case scenario storm surge for various hurricane strengths. Public shelters are also located on maps, and should be part of each marina's plan. These maps are available through your local planning office or your local emergency management office.

PLANNING

Evacuation routes from the marina to predesignated evacuation shelters must be known in advance and this information made available to all employees and boaters who may be at the marina. The notice to evacuate is too late to research the routes and shelters and to inform boaters and employees. This information should be researched in advance of each hurricane season and posted with the hurricane and heavy weather check off list.

No one should be permitted to remain on a boat in the marina during a hurricane or severe storm.

Boat owners planning to move their boat to a "safe haven" should be made aware that drawbridges will be locked in the down position when an evacuation order is issued.

EVACUATION

Although there may be considerable information about approaching hurricanes and other severe storms in broadcast and print media, there will normally only be about 12 hours advance warning of evacuation determinations.

Studies have found that the most heavily relied upon source of information in evacuation decision making by the general public is advice from local officials and authorities. Thus, evacuation information must be readily available in the marina severe weather preparedness plan. The marina operator and his staff must be informed of developing storm information and evacuation decisions and keep their boaters informed. Marina staff should stay tuned to broadcast media for evacuation information and be prepared to inform and assist their boaters. Evacuation will be recommended or directed by local emergency management authorities.

When Your Local Emergency Management Advises Evacuation -- Do So!

There can be rapid flooding of low lying land and roads. Downed wires and trees may block critical evacuation routes. Heavy exit traffic may clog those recommended evacuation routes. Bridges will be restricted from opening when sustained winds reach certain velocities. The Maryland Emergency Management Agency has conducted extensive studies of evacuation routes, taking into consideration critical roadways and all potential road hazards. You should contact your county emergency management office listed in Tab D for recommended evacuation routes from your marina.

Evacuation of all live-aboard lessees should be commenced no later than the issuance of an Evacuation Order. The marina should be prepared to assist those persons and transient boaters in obtaining transportation to a motel or shelter.

Movement of boats to "safe moorings" or "hurricane holes" should be commenced well in advance of any anticipated Evacuation Order. An evacuation order is a directive issued by local emergency management authorities within the jurisdiction or by State authorities. An evacuation order is generally aired over radio and television. Draw bridges will be closed for land based evacuation. Routes to these mooring locations should be well planned, as short as possible, and not via any drawbridges.

No one should return to the marina until authorized by competent authority. Flood waters take time to recede. Electric power and telephones will probably be

out of operation. Roads may be blocked with downed wires, trees, and other debris and some may be washed out or unstable. Emergency management personnel may restrict entry to an area until a damage assessment is made and to protect property from looting. People should stay out of disaster areas until return is authorized. Unless they are qualified to help, their presence may hamper first-aid and rescue work.

SHELTERS

Public shelters have been designated by each county in Maryland. The counties in Maryland operate their public shelters according to procedures which are unique to each individual county. In some cases the shelters are operated by the American Red Cross, while in other instances they may be opened and operated by an appointed local official. Shelter operations and standards are similar for all counties, and each county coordinates their shelter activities with the Maryland Emergency Management Agency. Predesignated public shelters have been evaluated for structural soundness, road access, and floodplain. They are manned by American Red Cross or trained local officials and are stocked with emergency supplies and communications.

A list of those shelters best located for your boaters is available through your county emergency management officials listed in Tab D.

There have also been many studies conducted that evaluate the use of public shelters by local residents, vacationers, and transients. Late night evacuation tends to maximize shelter use, primarily because it is occurring with a sense of urgency, leaving no time to make alternative arrangements with friends, relatives and motels or leaving too little time to travel the distance necessary to go out of town. Residents of high-risk locations such as Ocean City tend to leave earlier and travel greater distances, therefore relying less upon public shelters. Residents of beach communities usually have higher incomes and choose not to stay at public shelters and can afford motels if arrangements can't be made with relatives and friends.

Transient boaters will normally use motels or shelters and will probably need transportation to reach the motel or shelter.

EVACUATION TRAVEL PATTERNS

During a hurricane evacuation effort, a large number of vehicles must be moved across a road network in a relatively short period of time. It has been pointed out by the behavioral analysis that the number of evacuating vehicles will vary depending upon the intensity of the hurricane, the number of tourists remaining in the area and certain behavioral response characteristics of the evacuating population.

Vehicles enter the road network at different times depending upon an individual evacuee's response to an evacuation advisory. Conversely, vehicles leave the roadway network depending upon both the planned destinations of evacuees and the availability of acceptable destinations such as public shelter facilities, hotel/motel units, and friends or relatives in non-vulnerable locations. Vehicles move across the roadway network from trip origin to destination at speeds limited by the roadway capacity, which is the relationship of the traffic loadings on the various roadway segments to the ability of the segments to handle those loadings.

SPECIAL CONSIDERATIONS

There may be short advance warning. Stay tuned to weather channels and emergency information broadcasts.

Uninformed transient boaters may seek moorage in your marina, especially those seeking shelter when transiting the Chesapeake Bay.

Assistance will be required for those without means of shore transportation.

ADDITIONAL INFORMATION

Detailed additional information is available in the Maryland Hurricane Evacuation Study, December 1990, prepared by the Maryland Emergency Management Agency, the Federal Emergency Management Agency, Region III, and the U. S. Army Corps of Engineers, Baltimore District.

CHAPTER SEVEN

Your Severe Weather Preparedness Plan

FORMULATING YOUR PLAN

Severe weather can come in the form of a lightning or hail storm, a tornado, a northeaster or a hurricane. Whereas hurricanes are tracked from inception to their demise and their positions are published by a broad spectrum of the communications media, localized storms arise quickly and with very short notice, if any, of their location and intensity. Because hurricanes are the most severe and damaging, they will be addressed in detail in this chapter. However the preparations required in readying for hurricanes are also applicable to preparing for localized storm conditions.

The marina **SEVERE WEATHER PREPAREDNESS PLAN** is a comprehensive action plan to be initiated by your marina according to a pre-set storm criteria to prepare your marina for severe weather. The proposed plan outlined in this chapter is designed to assist you in protecting the marina facilities, as well as, protecting your tenants' vessels and equipment. It is also designed to minimize danger to your personnel and loss of life.

Marina operators should consider the following information in formulating an overall severe weather preparedness plan for their facility. Since facilities, circumstances and exposures vary throughout the State, adaptation of these suggestions to specific situations will be necessary.

RESPONSIBILITIES

The development of your plan starts with assigning the responsibility for its development, be it the owner/operator, the flotilla commander (if one is assigned), or whomever the marina owners decide should be responsible for its development. In any case, the person responsible for the development of your plan should be knowledgeable in the marina operations and facilities, and the securing of vessels during severe weather.

Depending on the size and complexity of your marina, you may want to set up committees to develop and carry-out different sections of your plan.

This chapter along with Tab A has been developed to assist the plan developer with the rudiments of developing such a plan.

DEVELOPING YOUR PLAN

A formal **SEVERE WEATHER PREPAREDNESS PLAN** should be developed and promulgated to all employees, tenants, volunteers, and other interested parties. Your employees should have a complete understanding of the organization's policies and plans for a severe storm situation. Your personnel will have homes, family and property of their own to consider. They must be made aware of their work related duties and responsibilities so that all may plan accordingly. They should have a plan of their own and should discuss it with their families, especially if they have to evacuate the area.

Know your physical plant facilities, operations, services, equipment, and housekeeping. Review all aspects in light of the hazards of the severe weather's forces of wind, rain, and flood. Review your facility for possible fire hazards, and keep fire lanes open. Make assignments of personnel to be responsible for areas and operation of the facility. Designate team units to be responsible to key people.

Review preparedness plans and procedures with co-tenants or subcontractors in multiple occupancy facilities. Marinas and yacht clubs should publish their severe weather preparedness plan to owners of vessels in their facility.

Where possible, get others involved with your plan. Yacht clubs may be able to draw volunteers and members to help prepare for a severe weather storm. Marinas may get vessel owners to do the same.

Review you facility's "seasonal" operations or activities during the hurricane season and consider ordering supplies, stocks, and vessel inventory items accordingly, to keep from running out of emergency stock items during a severe storm.

Consider the number of permanent, transient, new or brokered vessels that may be on hand or in your care, custody and control at any period of time during the hurricane season. Keep in mind your own vessels or work boats and the location of all vessels. Can you secure all vessels at your facility or will vessels have to be moved to inland, protected areas? How and by whom? Where? Flotilla plan? These questions are best answered in the calm, long before the storm.

Determine your policy on owned vessels in your care, custody and control at your facility or elsewhere. Will you be responsible for safeguarding the vessels:

Totally?
Partially?
With owner's permission?
Not at all?

Communicate your position to vessel owners, preferably in written form as a notice or as part of the mooring, listing or work order agreement or contract.

Know all the vessels and their owners, captains, or caretakers. You should have on record the home and business phone numbers and addresses of the vessel

or his designated representative. Consider having vessel owners file their severe weather preparedness plan, in writing, with you.

ANNUAL PREPARATIONS

Conduct a full facility housekeeping and "field-day" or "field-week" operation annually. Sometime in the spring or just prior to the hurricane season inspect and clean up all open areas and structures within your facility. This should include, but is not limited to, the following:

- Remove all debris, trash and unnecessary items from open areas.
- Trim all trees and shrubs and dispose of cuttings.
- Secure all trash bins and dumpsters in protected service areas.
- Store or otherwise secure all materials and supplies. Move them inside or to protected areas if possible.
- Dispose of or secure all salvaged or abandoned hulls, equipment and parts.
- Inspect and service as necessary all building walls, roofs, windows, and doors.
- Inspect, service and/or repair as necessary all docks, piers, wharfingers or slipfingers and pilings.
- Inspect and service as necessary all electrical and lighting installations, all fuel and natural gas supply and dispensing equipment.
- Inspect and have serviced as necessary all fire fighting equipment, both portable and fixed installations. Consider having fire extinguishing equipment serviced by a professional service just prior to the hurricane season and inspected by facility personnel on a monthly basis thereafter.
- Inspect and service as necessary all lifesaving equipment such as life jackets, work vests, life rings and lines, life rafts or rescue vessels.
- Check first aid supplies and replenish.
- Check all dry storage areas and racks for soundness and security. Note protection afforded same and consider associated hazards and contents at risk.
- Inspect and service all hauling equipment such as mobile lifts, hydro-lifts, and railways.

Order and stock, as necessary, the emergency equipment and supplies that the facility warrants such as extra mooring lines, lumber for fender boards, chafing gear, screw anchors, flashlights, batteries, portable generators, electrical and manual bilge pumps and hull patching or repair supplies.

IMPLEMENTING YOUR PLAN

After your plan has been developed it should be distributed to all those concerned with implementing your plan. Also, you should provide a meeting for the vessel owners to familiarize them with the plan.

Your staff should be briefed on the plan and trained on how to carry out the plan.

Your plan should be posted in a conspicuous place, readily available to anyone wanting to know its contents or his/her own responsibility.

Once your plan has been put into operation it should be reviewed annually prior to the hurricane season to insure its accuracy. A generic plan which can be expanded to meet your marina site specific needs is given in Tab A.

You will want to exercise your plan to give everyone involved a chance to see how your plan works and to determine if your plan is complete.

There may be many other points and precautionary measures that you can take prior to, during or after a severe weather storm strikes your area. The above may not cover all actions that should be taken. However, it is a guideline and checklist that can be a starting point for your severe weather preparedness plan. If there are specific measures or precautions unique to your operations, then fit them into the plan for your facility. **ONLY BY BEING PREPARED IN ADVANCE WILL YOU BE ABLE TO REDUCE LOSS AND DAMAGE AS A RESULT OF A HURRICANE OR OTHER SEVERE WEATHER CONDITIONS.**

SUMMARY

Develop a **SEVERE WEATHER PREPAREDNESS PLAN** and implement it early. The plan should be put into effect at least 72 hours in advance of the storm making landfall.

When developing the **SEVERE WEATHER PREPAREDNESS PLAN** remember to consider the following:

- Define "Boater Responsibility".
- Define "Closed Harbor" policy if applicable.
- Set a policy for handling transient boaters.

- Define "Chain of Command for Severe Weather Conditions" (Include Absentee Marina Owners).

- Define "Responsibilities of Employees in Severe Weather Conditions". Taking care of their families early is a first priority.

- Set up a communications link outside the marina environment.

- Keep financial records, marina plans, r ·covery plans and insurance policies in a safe place away from the marina site during the storm.

- Have a source of cash ready for recovery operations.

- Always consider the possibility of fire hazards which could be much more severe during a storm.

When developing the **RECOVERY** section of your **SEVERE WEATHER PREPAREDNESS PLAN** take in consideration the following:

- Define responsibilities of employees - manage accordingly.

- Develop a list of potential suppliers and contractors with phone numbers.

- Develop a procedure to procure needed equipment and services.

- Assign damage assessment responsibility.

- Formulate a marina "start-up" policy.

- Develop a spill containment/clean-up plan.

Review and revise the plans annually - require new employees read the plans and provide copies and instructions to boaters.

Develop an insurance program, see Chapter Two.

- Liability

- Storm damage

- Business Interruption Insurance

Know the limits of your marina design. Can your marina withstand a 50 year storm? Review your marina construction with your local design professional and upgrade the marina to meet the 50 year storm criteria, see Chapter Five. Consider the following when discussing your marina's design:

- Tidal surge

- Wind speed
- Boat loading

There are no consistently reliable storm refuges along the Atlantic seacoast. A mooring which may have worked for one storm may not be reliable for the next storm due to drastically different wind and flood conditions. Boats should not be moored in or near bays and inlets along the ocean as they will be subjected to the severe surge of the incoming hurricane.

Plan to move valuable equipment, files and boats which may be located in the floodplain or storm surge zone to higher ground.

Locate temporary storage of boats and other materials so that in the event of fire, the fire fighting equipment can reach the site and/or critical structures.

Use Tabs A and B to develop your SEVERE WEATHER PREPAREDNESS PLAN. Tabs A and B provide you with generic plans which can be modified to meet your site specific needs. Tab B includes an information gathering form which details the information on each of your tenants. Tab C is an emergency listing form which can be filled out and posted at the marina. Tab F provides an action check list which can be used as a guide in developing your requirements.

BIBLIOGRAPHY

Blain, W.R. and Webber, N.B., 1989B, Marinas: Design and Operation, Computational Mechanics Publications, Southampton, UK.

Blain, W.R. and Webber, N.B., 1989A, Marinas: Planning and Feasibility, Computational Mechanics Publication, Southampton, UK.

Boat Owners Association of the United States, Fall 1984, Seaworthy Newsletter, Guide for Owners and Managers of Marinas.

Boat Owners Association of the United States, Fall 1984, Hurricane Tips for Boaters, News from Boat/U.S.

Boat Owners Association of the United States, Fall 1984, Weather for Marinas, Boaters 6 Pack Information Brochure.

Boat Owners Association of the United States, Fall 1984, Seaworthy Newsletter, The Houston Yacht Club: After the Storm.

Boat Owners Association of the United States, Fall 1984, Seaworthy Newsletter, Vol. 2, No. 2.

Chamberlain, C.J., 1983, Marinas, Recommendations for Design, Construction and Management, National Marine Manufactures Association, New York, NY.

Dade County Marine Advisory Program, 1980, Boat Owners' Hurricane Protection Guide.

Federal Emergency Management Agency, 1981, Design Guideline for Flood Damage Reduction, FEMA-15.

Federal Emergency Management Agency, 1987, Evacuation: An Assessment of Planning and Research.

Federal Emergency Management Agency, 1986, Coastal Construction Manual, FEMA-55.

Hollin, D. and Pagans, K., 1980, Hurricane and Severe Weather Checklist for Boaters.

Houston Yacht Club, 1984, Protecting Your Boat Against Severe Weather.

International Marina Institute, 1987, Marina Design and Engineering Conference, Technical Papers, International Marina Institute, Wickford, RI.

Jones, Christopher, 1985, Hurricane Preparedness for Marinas, Florida Sea Grant Program

Lee County Marine Advisory Program, 1983, Safe Harbors in the Caloosahtchee River During Hurricanes.

National Weather Service, 1991, Maryland's Severe Weather History, 1991 Severe Storms Awareness Conference.

Quinn, A. Def., 1972, Design and Construction of Ports and Marine Structures, McGraw-Hill, New York, NY.

Scott, Karl, 1991, Hurricane Preparedness Guidelines, The Landing Harbor Delegal Creek Marina Manual, Savannah, Ga.

State Organization for Boating Access, 1989, Handbook for the Location, Design, Construction, and Maintenance of Boat Launching Facilities.

Taylor, Jon Guerry, and Dodson, Paul, 1990, Lessons from Hurricane Hugo, International Marina Institute.

Taylor J.G., 1990, Design Guidelines for Structures, Small States Organization for Boating Access (SOBA), Charleston, SC.

Taylor, Jon Guerry, 1990, Hurricane Notes, 17th National Technical Conference, International Marina Institute.

Taylor, J.G., undated, Lessons From Hurricane Hugo: Recommendations for Marina Operation and Design, Individual Paper, Mt. Pleasant, SC.

Taylor, Jon Guerry, 1989, Recommendations for Marina Operation and Design, Jon Guerry Taylor, Incorporated.

Taylor, Jon Guerry, 1985, Design Guidelines for Structures at Small Marinas, Florida Sea Grant Conference, April 16-18, 1985.

Taylor, J.G., undated, Lessons from Hurricane Hugo - The Need for Codes and Performance Criteria in Marinas and Coastal Structures, Individual Paper, Mt. Pleasant, SC.

Tobiasson, B.O., and Burn, H.L., 1989, Engineering Principles in Marina Failures, International Conference on Marinas, Southampton, UK.

Treadwell, G.I, Dearstyne, C.S., Dunham, J.W., Kuammen, K.R., Lee, C.E. and Sembler, E.L., 1969, Report on Small Craft Harbors, ASCE-Manuals and Reports on Engineering Practice - No. 50, New York, NY.

U.S. Army Corps of Engineers, 1990, Maryland Hurricane Evacuation Study.

U.S. Army Corps of Engineers, 1988, Joint Permit Application.

U.S. Department of Commerce, National Weather Service, 1976, Storm Tide Frequency Analysis for the Open Coast of Virginia, Maryland, and Delaware, Report Number PB-261 969.

U.S. Army Corps of Engineers, 1990, Hurricane Hugo After-Action Report.

U.S. Army Corps of Engineers, 1990, Hurricane Hugo Assessment.

U.S. Army Corps of Engineers, 1985, Information Guide and Joint Permit Application.

U.S. Army Corps of Engineers, 1981, Low Cost Shore Protection: A Guide for Engineers and Contractors, Coastal Engineering Research Center, Vicksburg, MS.

U.S. Army Corps of Engineers, 1977, Shore Protection Manual, Coastal Engineering Research Center, Ft. Belvior, VA.

VanVleck, G.K., 1984A, Layout and Design Guidelines for Small Craft Boat Launching Facilities, California Department of Boating and Waterways, Sacramento, CA.

VanVleck, G.K., 1984B, Layout and Design for Small Craft Berthing Facilities, California Department of Boating and Waterways, Sacramento, CA.

Whiteneck, L.L. and Hockeny, L.A., 1989, Structural Materials for Harbor and Coastal Construction, McGraw-Hill, New York, NY.

Wortley, C.A., 1988, Dos and Don'ts for Dock Design, University of Wisconsin, Madison, WS.

Introduction To Tabs

The Tabs emphasize the importance of developing your site specific severe weather plan. The marina owner/operator must assume full responsibility for adapting, activating, and/or supplementing the information contained herein to meet the particular requirements of their marina.

These Tabs were designed to be duplicated and used by the marina.

SEVERE WEATHER PREPAREDNESS PLAN

Tab A is a generic **SEVERE WEATHER PREPAREDNESS PLAN** which can be adapted/modified to the specific needs of your marina and your tenants. The plan outlines the requirements and responsibilities required to prepare for severe weather, and the actions required should that weather develop.

MARINA TENANTS SEVERE WEATHER QUESTIONNAIRE

Tab B is a form that you can hand out to the tenants at your marina to ensure that they are ready for severe weather and have taken appropriate actions to prepare for it. It is also a means to gather the information you will need on their boat, the equipment they have for securing the boat, and who is authorized to operate the boat in the absence of the owner.

HURRICANE/SEVERE WEATHER INFORMATION (EMERGENCY LISTING)

Tab C is designed to be copied, filled in, and posted on your bulletin board. It lists the chain of command at the marina and the area emergency management, and their telephone numbers. This would be the first place someone would go for information should the marina be threatened by severe weather.

COUNTY EMERGENCY MANAGEMENT CIVIL DEFENSE ORGANIZATION CONTACTS

Tab D is a list by county and city of the addresses and phone numbers of your Civil Defense contacts. These offices have information on your relocation maps, evacuation routes, and local shelters.

COMMUNICATIONS

Tab E lists the broadcast stations which provide weather forecasts.

HURRICANE RESPONSE CHECKLIST

Tab F is a checklist which was written as an adjunct to the **SEVERE WEATHER PREPAREDNESS PLAN**. The checklist follows the development of the storm approaching the marina, and increases the marina efforts as the storm becomes more imminent.

This section can be duplicated and posted on your bulletin board.

TAB A

Severe Weather Preparedness Plan

SEVERE WEATHER PREPAREDNESS PLAN

FOR

_____ MARINA

DATE: _____

This plan will be revised by marina owners/operators to keep current with advances in available technology and marina development.

Revised this date: _____

Revised this date: _____

Revised this date: _____

Revised this date: _____

Revised this date: _____

The plan should be reviewed and rehearsed prior to each hurricane season. Employees should have a complete understanding of the marina's policies and plans for a severe storm situation.

Reviewed/Rehearsed by _____ Date _____

Reviewed/Rehearsed by _____ Date _____

Reviewed/Rehearsed by _____ Date _____

Reviewed/Rehearsed by _____ Date _____

Reviewed/Rehearsed by _____ Date _____

Severe Weather Preparedness Plan

(EXAMPLE)

PURPOSE. To establish a marina severe weather preparedness plan which will minimize damages to the marina property and the tenants vessels resulting from high winds and water. This plan outlines the steps to be taken to respond to severe weather storms.

DISCUSSION. In the event of a severe storm normal operations are disrupted and specific actions may be required to minimize property and personnel damage. This plan requires planning, logistics and operational actions to prepare for and counteract the effects of high wind and water.

SCOPE. This plan furnishes information and a checklist of items to be completed to secure the marina against the effects of a severe storm and to safeguard its personnel and property.

ACTION. All personnel assigned to this plan shall ensure compliance with this plan. Each person assigned to implementing this plan shall be familiar with the contents of this plan by reading it at the beginning of each year prior to the hurricane season and carrying out all tasks identified herein in the event of a severe storm. Post a copy of Tab C, the Emergency Listing, Tab F, and the Hurricane Response Checklist.

CONCEPT OF OPERATIONS. Severe weather can come in the form of lightning, hail storms, tornado, or a hurricane. Because hurricanes are the most severe and damaging, they will be addressed in detail, however, the concepts required in preparing for them also applies to your local storm conditions.

HURRICANE PREPAREDNESS

The hurricane season is from 1 June through 30 November. During this season, the marina will maintain one of four material readiness phases. Phase 4, the lowest level of preparation, will be set automatically from 1 June through 30 November. Higher readiness phases will be set upon the approach of a storm.

Hurricane preparedness phases have been developed to ensure an orderly transition of the marina from a hurricane watch to the arrival of the hurricane. The marina owner or designee will direct the response and preparedness for each hurricane phase.

Any tropical disturbances along the Atlantic Coast can be considered a threat to the Chesapeake Bay region and the State of Maryland. The conventional path for these storms is northerly, however, these paths are not

always the pattern. Unexpected cold fronts can stall the forward movement of a storm and allow it to strengthen over warm waters. Also, storms which make landfall on the Gulf Coast can come across the Appalachians and cause severe flooding and wind damage in Maryland.

The passage of a hurricane could strongly affect an area in excess of one hundred miles. Winds build rapidly, up to speeds approaching 150 mph. It can be anticipated that commercial power will be interrupted for an extended period. General confusion in the community can be expected during pre and post hurricane efforts. The various drawbridges in the area will probably be disabled in the down position, severely hindering marine traffic. Tunnels could be closed and roadways flooded hindering vehicle traffic.

Evacuation orders will be issued by local authorities in time to insure that evacuation can be completed prior to the arrival of sustained gale-force (39 mph) winds.

When Your Local Emergency Management Advises Evacuation -- Do So!

The passing of the "eye" of the storm in your area is to be experienced with a great deal of caution. The direct passing of the "eye" presents a brief lull. Following this period of little wind will be a sudden blast of high velocity winds from the opposite direction. During the period of the "eye" passing, no one should venture outside or attempt to do anything in the exposed areas of the marina. Updates of the storms position can be obtained from your local radio, TV stations, and the marina weather service broadcasts.

A storm with winds below hurricane strength may still pose a threat to the marina. It may continue to build in strength before coming ashore as a hurricane, or it may come ashore at storm strength and still be strong enough to cause considerable wind, rain, and flood damage. In these situations the storm will be treated as a severe weather front and action appropriate to that weather system will apply.

Tenants at the marina are encouraged to develop hurricane plans consistent with the provisions of this plan.

HURRICANE CATEGORIES

The National Weather Service (NWS) categorizes tropical storms and hurricanes into five categories. The lesser beginning with the lower numbers, and as the numbers get higher, the more severe the storm. The storm surges in the table below are without wind and waves and are given at mean sea level (MSL). Depending on the category of the storm, it is estimated that waves from 5 to 20 feet may be added to the surge. If the storm makes landfall at high tide you may add another 1.0 foot to 1.5 feet to the height.

Hurricane Category	Winds (MPH)	Storm Surge (FT.)	Central Pressure Millibars	Central Pressure Inches	Damage
I	74-95	4-5	≥980	≥28.94	Minimal
II	96-110	6-8	965-979	28.50-28.91	Moderate
III	111-130	9-12	945-964	27.91-28.47	Extensive
IV	131-155	13-18	920-944	27.17-27.88	Extreme
V	155+	>18	<920	<27.17	Catastrophic

SAFFIR/SIMPSON HURRICANE SCALE

This plan has taken into consideration that each category of hurricane approaching the marina will require different levels of preparedness. As an example, a Category 1 hurricane with anticipated surge of 4 feet including tidal range may not justify moving stores to a second deck to protect them from flood water damage.

The maximum probabilities given for predicting the movement of a hurricane preceding the arrival of the storm are:

Forecast Period	Maximum Probability
72 hours	10%
48 hours	13% - 18%
36 hours	20% - 25%
24 hours	35% - 45%
12 hours	60% - 70%

Note: The Probabilities listed are the maximum values assigned to any location in advance of a predicted landfall, For example, the highest probability that the National Hurricane Center would assign to the event that a hurricane would strike Ocean City, Maryland within 72 hours would be 10 percent. Similarly, the highest probability assigned to the event that landfall would occur within 18 hours would be 45 percent.

Given these differences in probabilities the marina must be prepared to initiate the action plan on a low probability of it passing over the marina to achieve the 72 hour lead time necessary to execute the plan. All preparations should be completed prior to the arrival of sustained gale-force winds.

HURRICANE PHASES FOR THE MARINA.

There are four hurricane phases which will be set by the marina. The speed of advance of a hurricane dictates the hurricane phase to be set. The following advance notice is considered adequate for the marina to accomplish the required readiness actions under most circumstances. These phases are:

Phase Four: A seasonal hurricane phase automatically set by the marina on 1 June of each year and extending to 30 November.

Phase Three: When a hurricane is approaching, a phase to indicate that sustained gale-force (39 mph) winds, or greater, are expected within 72-48 hours.

Phase Two: When a hurricane is approaching, a phase to indicate that sustained gale-force (39 mph) winds, or greater, are expected within 48-24 hours.

Phase One: When a hurricane is approaching, a phase of maximum preparedness set when winds of sustained gale-force (39 mph) or greater are expected within 24-12 hours.

Progression from Phase Four directly to Phase One can happen very rapidly, and is quite possible because of the erratic behavior of hurricanes and the difficulty of accurately predicting the paths of hurricanes.

COMMUNICATIONS. A communications center will be established with the following responsibilities.

Notify all marina employees and tenants of the hurricane warning and serve as a message center and update marina tenants with periodic status reports.

The communications center will be staffed by marina volunteers. The center can be reached at:

Telephone No._____

The center will be established as soon as Phase Three is set. They will contact the marina volunteer committee directors and notify them of the warning within the first four (4) hours of the warning period. The telephone volunteers will attempt to contact all marina tenants during the initial 8 hour period of the warning. Two attempts will be made to contact each tenant.

During the hurricane approach and following the storm the message center will take calls from tenants concerning the warning status, the action plan and situation updates. The communication center will also relay specific messages to and from the marina every hour.

The marina switchboard will be reserved for hurricane operations, work crews, weather reports, security, service calls and emergency use.

TENANTS SHOULD NOT CALL THE SWITCHBOARD DURING WARNING PERIODS.

The communications center will function up to two days following the storm as required.

The communications center will be equipped with a radio link (VHF) to the marina in the event telephone communication is lost during the storm.

The communication center will operate between the hours of 4:30 P.M. and 10:30 P.M. to alert tenants and relay information concerning the progress and phases at the marina.

72 HOURS BEFORE ETA TO 24 HOURS AFTER THE STORM.

Communications Center Director: _____

Team A

Communications Chief: (NAME) Phone No.: _____

Operators 1._____

2._____

3._____

Other Teams as needed to relieve operators.

RESPONSIBILITIES PRIOR TO THE HURRICANE SEASON

INSTRUCTIONS FOR ADMINISTRATIVE STAFF

Prior to the hurricane season the following administrative functions will be carried out.

Review severe weather plan and update.

Post Hurricane Response Checklist, Tab F and Emergency listing, Tab C, and distribute copies of Hurricane Plan to all concerned with carrying out the plan.

Distribute copy of Marina Tenants Severe Weather Questionnaire, Tab B, to all tenants/slip renters. Follow-up on return of forms.

Distribute hurricane plan and literature on evacuation zones and emergency shelters to tenants at marina.

Plan and make a check list of merchandise, office records, and cash that will be evacuated. Determine what records and documents must be evacuated and identify where they are kept.

Make a list of volunteers, including phone numbers, address and responsibilities.

Develop a list of names and telephone numbers of an authorized, qualified and accessible alternate captain for all boats in the marina in case owner is absent during a storm.

Inventory possessions for insurance purposes, prioritize what must be evacuated and what can be protected. Be sure a copy of your inventory is kept in a safe place. Video if possible.

Review insurance coverage for flood and wind damage.

Develop agreements for rental trailer(s) to evacuate possessions, and leasing of cranes to move boats.

Develop a list of vendors for short notice delivery of portable toilet facilities and dry ice.

Ensure that the following are stocked and ready for issue:

- Flashlights with batteries
- Emergency high-intensity lights

- Battery operated radio with weather frequency
- Nylon line sized to tie down large items
- Rain gear and boots
- Plywood (CD X 1/2" X 4" X 8") and lumber (2" X 4" X 16") for boarding windows and for immediate recovery operations
- 16d double head form nails
- 10' X 100' rolls of 4 mill polyethylene for draping high value materials and equipment
- Emergency water containers (5 gallon)

Review security requirement of facilities, marina and tenants vessels and update as necessary. Consider both pre and post storm security requirements.

Ensure pre-selected storm refuge moorings for boats are adequate. Consult your local waterways guides, sailing directives, and other local publications.

Develop a check-off system for logging in personnel entering and leaving the marina during the storm.

HURRICANE RESPONSE CHECKLIST FOR ADMINISTRATIVE STAFF

PHASE FOUR

AUTOMATICALLY SET 1 JUNE THROUGH 30 NOVEMBER

_____ Review severe weather preparedness plan and update.

_____ Address areas of responsibilities and complete.

_____ Distribute and post revised severe weather plan.

_____ Brief marina personnel, tenants and volunteers on severe weather preparedness plan.

_____ Ensure pre-selected refuge moorings for boats are adequate.

_____ Coordinate plan's requirements with local authorities.

_____ Check first aid supplies and restock.

_____ Check emergency supplies and restock.

_____ Make vender list for rental and leased equipment.

PHASE THREE

72-48 HOUR PRIOR TO HURRICANE'S ETA

_____ Initiate hurricane warning and activate communication plans.

_____ Set up communications center (if one is planned).

_____ After phase three is set, release unnecessary marina personnel so that they can prepare their homes and gather their personal belongings.

_____ Notify tenants and volunteers of impending conditions.

_____ Work closely with harbor master and marina volunteers to update posted storm information and disseminate other information to employees, boat owners and volunteers.

_____ Process and mail all paperwork that can be completed immediately.

_____ Close marina stores to general public.

_____ Supplies must be earmarked for marina use at the first sign of a hurricane threat to avoid depletion of stock by customer demands.

_____ Begin preparation of marina grounds:

- Stock emergency food and water supplies.
- Check emergency generators, lighting, and fuel supply. Obtain additional generators if required.
- Check emergency equipment list. Arrange security staff schedule and volunteers.
- Secure outdoor furniture, large signs, flags, trash cans, carts, fire extinguisher, antennas and other loose items that can be affected by wind.

_____ Back up computers and store archive tapes with records to be removed.

_____ Start plans to evacuate personnel and equipment in flood prone (low-land) locations.

_____ Request other companies or concerns with supplies and equipment at the marina to remove them.

_____ Have supplies and equipment at other marinas brought back to the marina and secured.

_____ Notify any suppliers to hold shipment until after the storm.

_____ Have crane delivered for hoisting boats.

_____ Ensure first aid supplies are on hand.

_____ Arrange security staff and volunteers schedule.

PHASE TWO

48-24 HOURS PRIOR TO ETA

_____ Maintain position of hurricane in communication center.

_____ Maintain contact with local weather bureau/oceanographic center.

_____ Ensure marina is secured from non-essential traffic.

_____ Issue emergency supplies and equipment to crews as required.

_____ Move files and expensive equipment to higher shelves and drape with plastic.

_____ Implement check-in, check-out, and duty list for personnel entering and leaving the marina.

PHASE ONE

24 - 0 HOURS PRIOR TO ETA

_____ Secure marina.

_____ Coordinate status reports on hurricane position and intensities to crews, tenants and volunteers at marina.

_____ Evacuate marina if directed.

RESPONSIBILITIES PRIOR TO HURRICANE SEASON

INSTRUCTIONS FOR FACILITIES AND MAINTENANCE STAFF

Prior to the hurricane season carry out the following facility functions.

Review severe weather preparedness plan and update as needed.

Inspect buildings to detect, repair, or secure potential sources of danger such as:

- Damaged or improperly secured doors, gaskets, windows, ventilation openings, and tie downs.
- Structural weaknesses resulting from worn or weather-beaten supports, wooden light poles, and similar objects.
- Clogged or inoperable gutter and drain pipes, storm drains, sewers, and catch basins.
- Surrounding trees, with rotten limbs or large branches. Trim excess growth from trees and dispose of cuttings.
- Roofing systems for soundness. Remove any litter and debris.
- Inspect, service and repair as necessary all docks, piers, wharfingers or slipfingers and pilings, especially cleats, moorings, and utilities.
- Inspect and have serviced as necessary all fire fighting equipment, both portable and fixed installations.
- Inspect and service as necessary all lifesaving equipment such as life jackets, work vests, life rings and lines, and life rafts or rescue vessels.
- Ensure that all essential vehicles and portable generators are operational, fueled, and ready for use. Test run generators and re-stow.
- Inspect all storage shed outbuildings and portable office trailers for proper tie-down.
- Inspect and service as necessary all electrical lighting installations; and all fuel and natural gas supply and dispensing equipment. Check cut-off valves for fuel and water lines.

- Check all dry storage facility areas and racks for soundness and security. Note protection afforded same and consider associated hazards and contents at risk.

- Inspect all emergency lighting systems and ensure they are operational.

- Inspect and service all hauling equipment such as mobile lifts, hydro-lifts, and railways.

- Check emergency equipment and supplies and reorder to fill requirements, especially extra mooring lines, lumber for fender boards, chafing gear, screw anchors, flashlights, batteries, portable generators, electrical and manual bilge pumps and hull patching or repair supplies.

HURRICANE RESPONSE CHECKLIST FOR

FACILITY AND MAINTENANCE STAFF

PHASE FOUR

AUTOMATICALLY SET 1 JUNE THROUGH 30 NOVEMBER

_____ Review severe weather preparedness plan, update and submit to administration.

_____ Address areas of responsibility and complete.

_____ Ensure that all essential vehicles and portable generators are operational and ready for use.

_____ Inspect buildings, piers, and wharfs.

_____ Inspect all storage sheds, outbuildings, and portable office trailers for proper tie-down.

_____ Inspect all emergency lighting systems and ensure they are operational.

PHASE THREE

72-48 HOUR PRIOR TO HURRICANE'S ETA

_____ Schedule marina's crew for storm duties. Include "shore leave" for crew to prepare homes and families at the first notice of storm.

_____ Secure all dumpsters with tie-downs.

_____ Remove trash, scrap, and excess materials.

_____ Fuel all vehicles to 100 percent.
_____ Fill all gas and diesel fuel storage tanks.

_____ Clear all loose gear from wharfs and piers.

_____ Secure piers, docks and dry storage areas:

- Remove unclaimed trailers, boats and equipment from piers, docks and dry storage areas.
- Move drink, ice machines, etc. to higher grounds.
- Remove and secure trash cans from piers.
- Anchor portable buildings.
- Check cranes and sling hoist.
- Schedule and commit removal of boats by crane.
- Begin stripping removable boats and moving to hoisting area.
- Coordinate securing marina facilities, equipment and boats.
- Monitor the need to disconnect floating and fixed pier's power cables, water and fuel lines if tidal surge is expected. Be prepared to disconnect floating dock ramps and secure docks to fixed pier pilings.

_____ Police marina and dock areas to stow away or secure loose equipment and items that could become missile hazards in high winds.

_____ Secure all flammable, explosive or other hazardous materials.

_____ Remove boats and trailers in outside dry storage "racks". Secure with tie-downs when moved.

PHASE TWO

48-24 HOURS PRIOR TO ETA

_____ Inspect all work done in phase three.

_____ Begin evacuation of board boats and dinghies.

_____ Evacuate trailerable boats to predesignated area.

- Notify owners or remove with marina personnel.
- Arrange to have boats tied down after move.

_____ Evacuate non trailerable boats.

_____ Evacuate cruising boats.

_____ Secure dry stack storage area.

_____ Activate flotilla plans for removal of vessels to safer location.

_____ Board up all windows and glass doors.

_____ Remove or lock all dock boxes and check tie downs.

_____ Secure waterside sewage pumpouts. Turn off sewage grinder pump breakers at last call to evacuate marina.

PHASE ONE

24 - 0 HOURS PRIOR TO ETA

_____ Brief departing released personnel on recall procedures.

_____ Stage personnel who are scheduled to ride out storm.
(When your emergency management advises evacuation -- do so!)

_____ Respond to last minute items.

_____ Secure fuel and oil tanks.

_____ Secure main switch gear to piers and low lying areas.

_____ Remove all excess gear from piers and dock area.

_____ When appropriate (extra high tide or storm surge expected) loosen floating dock ramps from hinges and secure.

_____ At last call, remove outside life rings and fire extinguishers from floats and other outside locations.

_____ Secure power to marina if evacuated.

RESPONSIBILITIES PRIOR TO HURRICANE SEASON

INSTRUCTIONS FOR ALL MARINA PERSONNEL

Prior to the hurricane season take the following actions.

Each employee will have a written plan prepared for his/her personal preparation and evacuation in order to effectively reduce his/her required leave time. This will also ensure that other crew members can have adequate leave time. This plan should be discussed with your family so that they will be prepared and know what is expected of them. When preparing your plan you should consider the following:

Prepare your home and yard early in Phase Three to allow for an organized early evacuation. Your efforts should be to reduce wind and flood damage by boarding windows, raising furniture, covering books and appliances, etc.

Decide where to go. This will depend on the track and severity of the storm. Local emergency shelters may not be as comfortable as a stay with out of town relatives, but will allow you to return more quickly.

If your family decides to go in different locations during evacuation, decide on destination, alternates and communication options to reduce anxiety over the well being of family members. Calling a designated out of state relative is one option to reestablish contact.

How will you evacuate? Plan your route and departure time to avoid low areas which may be flooded due to torrential rains and high tides. Consult the evacuation maps for your area. Scout your route ahead of time for local hazards and alternatives. Plan to leave early.

Decide what to take. Important documents should be designated in advance for removal. Small valuables, heirlooms, photos, etc. can be boxed for evacuation.

Build a hurricane inventory to include:

- ice chest for ice and perishable food
- potable water (plan 1 qt/person/day)
- food (perishable, canned, snack)
- can opener and utensils
- flash lights and batteries
- battery operated radio with weather frequency
- extra clothing

- rain gear and boots
- toilet and first aid kit
- required medicine supplies
- bedding
- cash, check book and credit cards

NOTE: Alcoholic beverages and firearms are not permitted in emergency shelters.

Be prepared to evacuate early and leave as soon as possible after evacuation has been called for. You may want to send your family ahead if other responsibilities may delay your own evacuation until Phase One.

Returning after an evacuation may be a time of despair or rejoicing. Concentrate on the positive aspects of your survival and meet the challenge with optimism and safety consciousness. The threat of storm related injuries is not over. Several deaths in the Charleston area after hurricane HUGO resulted from post-storm injuries from chain saws, falling trees, candle fires or electrocution. The threats of spoiled food, bad water, poor sanitation, and poisonous snakes should also be considered.

Because of the uncertainty of how long crew members will be required to be on duty, at first notice of a storm there will be staggered relief shifts to allow each person time to go home and prepare their homes and families. This will be done well in advance of the anticipated storm (as much as 2-3 days in advance).

In order to return to preparations as soon as possible, leave time will be scheduled with team leaders going first. Because the fatigue factor during and after the storm can be expected to be high, staffing prior to the storm's arrival should be keep at a minimum.

RESPONSIBILITIES PRIOR TO HURRICANE SEASON

INSTRUCTIONS FOR TENANTS

Prior to the hurricane season tenants will fill out Tab B and carry out the following functions.

Review Severe Weather Preparedness Plan.

Wet slip boat owners are required to:

- Complete the Marina Tenants Severe Weather Questionnaire. Give a copy to the marina Operations Officer and keep one for yourself. Keep current at the Marina Operations office the following information:

  Telephone numbers.

  Name and phone number of a qualified and accessible alternate captain in case owner is absent during a storm.

  Copy of boat insurance policy.

- Keep an adequate inventory of storm gear aboard and maintain dock lines of proper size and condition.

- Ensure that your boat can get underway with its own power at all times.

- Ensure that your boat is adequately covered with liability insurance. The boat owner is liable for damages caused to the marina by his/her boat.

- Attend anchoring and evacuation clinics when given by the marina or local authorities.

- All tenants renting slips and/or dry storage space will be required to sign a slip rental agreement and have an individual severe storm action plan.

Dry rack boat owners are required to:

- Keep canvas tops down and secured.

- Keep bilge drain plugs pulled.

- Maintain a boat trailer in road-worthy shape for evacuation from dry racks and notify marina of your intentions well before deadline to avoid unnecessary tie-downs.

- Ensure that your boat is adequately covered with liability insurance. The boat owner is liable for damages caused by his/her boat.

HURRICANE RESPONSE CHECKLIST FOR TENANTS

PHASE FOUR

AUTOMATICALLY SET 1 JUNE THROUGH 30 NOVEMBER

_____ Review severe weather preparedness plan, update and submit to administration.

_____ Address areas of responsibility and complete.

_____ Update Marina Tenants Severe Weather Questionnaire and return to office.

_____ Know your evacuation route and shelter plan.

_____ Ensure that your emergency gear is serviceable and ready for use.

PHASE THREE

72-48 HOUR PRIOR TO HURRICANE'S ETA

_____ Secure your boat in accordance with your pre-approved plan.

PHASE TWO

48-24 HOURS PRIOR TO ETA

_____ Evacuate the area.
(When your emergency management advises evacuation -- do so!)

RESPONSIBILITIES PRIOR TO HURRICANE SEASON

INSTRUCTIONS FOR VOLUNTEERS

Prior to the hurricane season, volunteers will carry out the following facility functions.

Review Severe Weather Preparedness Plan.

Complete and keep current at the Marina Operations office the following information:

- Telephone numbers and address.
- Team captain or group assignment.

HURRICANE RESPONSE CHECKLIST FOR VOLUNTEERS

PHASE FOUR

AUTOMATICALLY SET 1 JUNE THROUGH 30 NOVEMBER

_____ Review severe weather preparedness plan, update and submit to administration.

_____ Address areas of responsibility and complete.

_____ Participate in exercises of hurricane plan.

PHASE THREE

72-48 HOUR PRIOR TO HURRICANE'S ETA

_____ Man communication center.

_____ Assist in securing marina and boats as agreed upon.

PHASE TWO

48-24 HOURS PRIOR TO ETA

_____ Continue to man communication center.

PHASE ONE

24 - 0 HOURS PRIOR TO ETA

_____ Evacuate marina and return to family.

RESPONSIBILITIES DURING STORM PHASES

DISCUSSION

Numerous tasks and precautions must take place in preparation for the hurricane or severe weather. The extent of the tasks and the number of personnel available will determine the amount of time required for the marina to complete the preparation. However, 72 hours is the minimal time allowable in most instances and is the criteria for implementing the following:

PHASE THREE (ALERT)

72-48 HOUR PRIOR TO HURRICANE'S ETA
(EARLIER IF A WEEKEND IS INVOLVED).

- Notify all personnel that the facility is on a hurricane alert. All personnel will commence preparations for putting the Severe Weather Preparedness Plan in action.

- The communications center will be manned and all volunteers and other parties will be notified of the hurricane alert.

- At 72 hours prior to ETA, put mobile or waterborne operations personnel on standby and start securing operations. Initiate plans to evacuate personnel and equipment in the flood prone (low-land) locations.

- Begin facility protection preparations by policing all yard, marina and dock areas to stow away or secure loose equipment and items. Store in covered or sheltered areas.

- Secure all flammable, explosive or other hazardous materials, such as compressed gas cylinders, in a safe, protected secure area.

- Boats from dry storage or other facilities on outside "racks" for small boats and trailers storage will be removed and secured in designated safe areas. Small boats and trailers will be provided protected storage or secured in place with ground screws.

- All vessel removal operations are to be well underway and completed during this forty eight hour period. Commence plans for securing remaining vessels.

- As the departing vessels are fueling, facility vessels and vehicles will also be topped off, as necessary, in preparation for securing all fueling operations and equipment. (Loss of electrical power during a hurricane may disrupt fuel supplies after the storm.)

- Check and secure any loose siding or roofing on inside "rack" storage buildings. Remove boats if facility is in a lowland area and is in danger of flooding.

- If other companies or concerns have supplies or equipment in your facility, request that they have their items removed.

- Consider removing any equipment and supplies you may have at other locations.

- Take down large signs, antennas or other removable items subject to wind damage.

- Commence facility protection precautions. Storm shutters or other protective equipment and windows will be taped with masking tape to reduce the possibility of flying glass.

- Process and mail all paperwork that can be completed immediately. Set all new paperwork aside to be completed after the hurricane or storm.

- Remove expensive equipment or products to inland warehouses for storage. If this is not possible due to a lack of transportation equipment or limited time, stack expensive equipment or inventories in protected areas. Cover them with tarpaulins to protect them from water damage should the roof leak or the windows get blown out.

- Reduce inventories as much as possible and delay ordering materials, stocks or supplies until after the storm. If materials or inventories are en-route, try to divert them to a temporary warehouse or area not subject to the storm.

- Begin contacting vessel owners or their representatives in order to begin removing vessels from the facility, as necessary.

- Begin flotilla plans, if any, for vessel removals to safer locations, as necessary.

- Monitor storms progress.

PHASE TWO (WATCH)

48-24 HOURS PRIOR TO ETA. Commence and or complete the following actions.

- Notify all personnel that facility is on hurricane watch.

- Continue to monitor storm's progress.

- Complete securing operations in lowland locations. All dock structures, field buildings and offices will be secured.

- House type trailer units are to be moved to a safe location above the floodplain. If this is not possible they should be firmly anchored.

- In areas subject to flooding, move vehicles and/or equipment to the highest point available. If outside storage is necessary, do not park under trees, towers, signs, or power lines.

- All employee personal belongings will be removed from evacuated locations.

- All electrical power supplies to areas that may be flooded will be secured by turning off the power at the main breaker switch.

- All natural gas will be turned off at the main valve if the marina is vacated.

- All fuel supply tanks and lines will be secured at the shore side installation.

- All electric motors, pumps and like equipment at or below ground level will be disconnected and protected or placed in a safe location.

- If fresh water is supplied from municipal or other water lines, turn off the supply at the meter.

- Secure all equipment such as forklifts, trucks, travel lifts, mobile cranes, and work boats in protected areas, shops or warehouses as they may not be needed during the storm. Vehicles are to be parked with the emergency brake on.

- Complete securing all facility "shop" operations. Their equipment and operations are not needed and their interior, protective space will be utilized for storage of other facility equipment. Tape windows, secure and lock doors.

- For facilities planned to be manned during the hurricane, check that all emergency supplies are readily available such as first aid kits, fire protection equipment, sufficient stores of provisions, including bottled fresh water, fuel for emergency generators, battery-power lighting, flashlights or lanterns, battery powdered radios, VHF units and the like.

- Notification to manager, or local police will be made when evacuation is complete and the location secured.

PHASE ONE WARNING

24 - 0 HOURS PRIOR TO ETA

In these hours prior to the projected arrival of the hurricane, the "Hurricane Warning" advisory will have been issued and it is highly likely that the hurricane will make landfall or pass near the marina facility. The following activities will be in progress or nearing completion:

- Notify all personnel that the facility is on hurricane warning.
- Continue to monitor storm's progress.
- With all vessel protection and securing operations completed, make a final check of doubled mooring lines, tied off with sufficient slack and fender boards and/or other protective equipment in place.
- Secure as necessary any remaining operational facility buildings.
- Employees who are not manning facilities during the storm will be released no later than twelve hours prior to the storm. Instructions for reporting back to work after the storm will be given at that time.
- Whether manning or evacuating the facility, insure that all perimeter access points in the form of fences, gates, and building doors are locked and secured, except the main entrance gate.
- All facility preparations will be completed twelve hours prior to the hurricane's arrival. Depending on the track of the storm, the extent of preparation based on information received may or may not be adequate. All precautions taken as a result of the hurricane warning should be based on the belief that the storm will hit the facility directly and with its full force. If the full precautionary measures have not been taken, there is probably little that can be done at this point to improve preparation. This is especially true if authorities issue an evacuation notice to the facility location or area. In that case, evacuate the area and hope that the measures taken will suffice. The protection of human life is more important than property loss or damage.

DURING THE HURRICANE

The following suggestions are issued in the interest of personal safety:

- When your local emergency management advises evacuation -- do so!
- Stay in a protected and safe place inland if possible.
- For facilities remaining manned, extreme caution will be exercised in all outdoor activities. In the event of injury, outside medical aid will probably not be immediately available.
- No one will attempt to move or re-secure a loose vessel or equipment during the storm period.
- Life jackets will be worn by anyone required to perform any activities on or near the docks or piers during severe storm phases.
- No vehicles or equipment will be operated during the storm period unless absolutely necessary.
- Stay tuned to news and weather broadcasts concerning the hurricane's movement so you will know when the danger has passed. Hurricanes can take between 6 and 8 hours to pass through an area.
- Do not assume that the calm of the "eye" of the hurricane means the storm has passed. If the "eye" passes over you, there is still the other side of the hurricane to contend with. Remember, when the "eye" passes over you the wind will be in the opposite direction when it starts back up on the back side.

AFTER THE HURRICANE

The following should be considered when returning to the area:

- Extensive damage may have been caused by the hurricane. While checking the condition of the marina facility is of a main concern, there may be limitations to access to the facility or at the facility itself. Flooded roads, downed power lines, washed out areas of beach or river areas are just a few of the problems. An inspection of the facility will be made as soon as practicable to determine conditions, damages and security of premises.
- Be alert to flash flooding that may occur due to heavy rains up stream or flooded canal areas even after the storm has ended. Also, be alert for tornados which are frequently associated with hurricanes or occur after the

hurricane has passed. In crossing water, do not try to cross a stream or pool of water unless you are certain that the water will not be above your knees (or above the middle of your car's wheels) all the way across.

- Post storm security should be addressed as soon as you return to the marina to protect against vandalism.

Personnel returning to the facility and beginning the preliminary damage assessment are to be aware of the following:

- Beware of snakes when going into grassy areas or other locations. Personnel should wear boots and be cautioned to look where they place their feet and hands.

- Be aware of possible downed electrical wires which should be considered "Hot" and avoided until the power company or facility electrical maintenance personnel service the wires.

- Check natural gas installations for leaking gas by smell only, not with matches or candles (for facilities with natural gas).

- Check facility fueling docks and tanks for leaking gasoline or diesel fuel, where applicable. (This may require filing a report with your local, state or federal environmental agency.)

- Electrical equipment of the facility that has been submerged in water is not to be started until it has been checked and repaired as necessary.

- Broken sewer or water mains are to be reported immediately to either the utility company responsible for repair or to the marina facility maintenance personnel if owned and maintained by the facility.

- Building's, shop's and dock's electrical wiring is to be checked completely prior to turning on the main power switch.

- Wet electrical appliances, such as hot plates, toasters, calculators, typewriters, etc. will be inspected, and repaired or replaced as necessary, prior to operation.

Plan to return to the marina as soon as possible after the storm has passed, civil defense clearance given, and your family is taken care of. Telephone communications may not be possible at this time, so listen to the public radio broadcast for information, civil defense clearance, etc. on returning to the area.

As soon as the facility has been deemed safe for complete inspection, and where damage has occurred, a complete survey of the facilities, inventories, equipment and stocks will be made and documented with photographs or video where possible. Any

losses or damages should be reported immediately to the insurance agent of the marina.

A written assessment of damages will be prepared as soon as possible. Estimated damages to docks and piers and other harbor facilities, cranes, mast hoist, boat sheds, toilets, showers, lockers, Harbor Master's office, fuel dock and office, electrical transformers, electrical service, and telephones are to be included in the assessment.

Return and account for any emergency equipment issued.

After making damage assessments, plan repairs and implement a repair program as soon as possible.

While it is understandable that immediate repairs may need to be undertaken, all actions taken during the course of repairs prior to any insurance adjustment will be properly documented and filed. In the case of facility property damages, appraisers assigned by the insurance company will be involved in assisting with the claims. Insurance companies usually establish storm claims offices to handle the numerous claims after a hurricane strikes. In catastrophic situations, extra personnel are called in to handle the volume of claims.

If there has been any theft or vandalism loss or damage to the facility, other than storm related, a report will be made to local police or other law enforcement authorities so that appropriate actions can be taken. The incident report number and, if possible, a copy of the incident report, is to be obtained from the police to substantiate any insurance claim or tax property loss reporting.

It is obvious that vessel owners, captains, caretakers and others with vessel interests will inquire as to the status of their vessels. These inquires should be fielded as best as possible, especially if there is no damage to their property. Notification of any vessel damage should be made as soon as possible. Consider dedicating a phone line with a pre-recorded message to cut down on answering these calls. While it is understandable that vessel owners may want to return to marinas or yard facilities as soon as possible, they will be advised as to the situation at the facility and as to the availability of berthing facilities for their vessel as soon as practical. If damages preclude the facility from providing a berthing space for the vessels, the owners will be so notified and advised as to when the facility may be available to provide a berth.

If the facility is relatively undamaged, then efforts will be made to become operational and provide facility services to those who are not so fortunate.

Controlled access and/or security at the facility may be required in any instance. Facility personnel will be put in charge of such security with considerations given to the handling of:

- Members and non-members in the case of yacht clubs.

- Tenants and non-tenants in the case of marinas or other facilities.
- Radio, television and press representatives.
- Outside salvage contractors, repairers, estimators, surveyors, adjusters, and appraisers.

TAB B

Marina Tenants
Severe Weather Questionnaire

Boat Owner _____ Phone # _____

Pier # _____ Slip #_____ Locker # _____

Alternate Captain _____ Phone # _____

Insurance Carrier _____

Boat Type _____ Boat Name _____

PLEASE COMPLETE THE FOLLOWING QUESTIONNAIRE AS APPROPRIATE:

Group A - Sunfish, Board Boat, Dinghy (initial)

_____ I intend to remove my boat(s) and equipment from the marina grounds.

_____ I intend to temporarily store my boat(s) and equipment in the following location:_____.

Group B - Trailerable Boats (initial)

_____ I intend to remove my trailer(s), boat(s) and equipment from the marina grounds, and relocate them to _____

_____.

_____ I intend to temporarily store my trailer(s), boat(s) and equipment in the following location:_____

_____.

_____ I have inspected my boat trailer(s) to insure that it is in operable condition and agree to maintain the trailer in operable condition while it remains on marina property.

Group C - Non-Trailerable Boats Under 8000 Pounds (initial)

_____ I intend to secure my boat in the following location:_____ _____.

_____ I intend to haul out my boat for temporary storage in the following location:_____.

_____ I agree to report to the marina during the severe weather warning to prepare my boat for haul-out and to assist with haul-out operations.

Group D - Cruising Boats (initial)

_____ I intend to secure my boat in the following location:_____ _____.

_____ I intend to move my boat to another dock site or in the following location: _____.

_____ I intend to anchor my boat in the following location:_____ _____.

****

GROUND TACKLE ON BOARD

Anchor(s) _____

_____

_____

Chain(s) _____

_____

_____

Anchor Line(s) _____

_____

_____

Mushroom Anchor _____

Bridle(s) _____

Chafing Gear _____

_____ I have reviewed the marina's severe weather preparedness plan.

_____ I have a severe weather preparedness checklist on board the boat which is in conformance with the marina's plan.

_____ I have reviewed and rehearsed my severe weather preparedness plan with my alternate captain.

Dock Box

_____ I understand that the dock box belongs to _____ marina _____ me and _____ is _____ is not insurable under the marina insurance policy.

_____ I intend to remove my dock box and/or belongings during a hurricane warning.

TAB C

Hurricane / Severe Weather Information (Emergency Listing)

_____ MARINA

Owner/Operator_____Emergency Phone _____

Marina Storm Emergency Plan Director/Coordinators:

Name/Phone Number

Director/Coordinator_____

Administrative Staff Director _____

Operational Staff Director_____

Dock Master_____

Other Emergency Staff Assignments_____

Marina:

Emergency Communications Center_____

Post Storm Information_____

Emergency Phone Numbers:

Reliable Weather Information_____

Nearest Coast Guard Unit_____

Local Emergency Management Coordinator_____

American Red Cross_____

Local Police_____

State Police_____

Basic Boat Owner Responsibilities:

1._____

2._____

Instructions for Transient Boat Owners/Operators:

1._____

2._____

Recommended:

Evacuation Routes_____

Public Shelters_____

Emergency Ground Transportation_____

Location of:

Marina Severe Weather Preparedness Plan_____

Maryland (DNR) Severe Weather Guidebook _____

Special Instructions: _____

_____

_____

TAB D

County Emergency Management Civil Defense Organization Contacts

ALLEGANY COUNTY

Allegany County Civil Defense
and Disaster Preparedness Agency
Constitution Park
P. O. Box 1340
Cumberland, Maryland 21502 — 301-777-5908

ANNE ARUNDEL COUNTY

Office of Emergency Management
Anne Arundel County
P. O. Box 2700
Annapolis, Maryland 21404 — 410-222-8040

BALTIMORE CITY

Office of Disaster Control
and Civil Defense
1201 East Cold Spring Lane
Baltimore, Maryland 21239 — 410-396-6175

BALTIMORE COUNTY

Bureau of Civil Defense
Baltimore County
401 Bosley Avenue
Towson, Maryland 21204 — 410-887-5996

CALVERT COUNTY

Calvert County Division of
Emergency Management
Court House
Prince Frederick, Maryland 20678 — 410-535-1623

CAROLINE COUNTY

Caroline County Division of
Emergency Management
P. O. Box 151
Denton, Maryland 21629 410-479-2622

CARROLL COUNTY

Carroll County Emergency Services
1345 Washington Avenue
Westminister, Maryland 21157 410-876-3015

CECIL COUNTY

Cecil County Emergency Management
and Civil Defense Agency
Court House, Room 6
Elkton, Maryland 21921 410-398-1350

CHARLES COUNTY

Charles County Civil Defense
and Disaster Preparedness Agency
Division of Emergency and Risk Management
P. O. Box B
LaPlata, Maryland 20646 301-645-0630

DORCHESTER COUNTY

Dorchester County Emergency Management
and Civil Defense Agency
P. O. Box 231
Cambridge, Maryland 21613 410-228-1818

FREDERICK COUNTY

Frederick County Civil Defense and
Disaster Preparedness Agency
190 Montevue Lane
Frederick, Maryland 21701 301-694-1536

GARRETT COUNTY

Garrett County Emergency
Management Agency
Oakland, Maryland 21550 301-334-1930

HARFORD COUNTY

Harford County Department of
Emergency Operations
2220 Ady Road
Forest Hill, Maryland 21050 410-838-5800

HOWARD COUNTY

Howard County Office of Emergency
Management and Civil Defense
10650 Hickory Ridge Road
Columbia, Maryland 21044 410-313-6000

KENT COUNTY

Kent County Emergency Management Agency
P. O. Box 253 - Court House
Chestertown, Maryland 21620 410-778-3758

MONTGOMERY COUNTY

Montgomery County Emergency
Management Planning
100 Maryland Avenue, Room LL-01
Rockville, Maryland 20850 301-217-2470

PRINCE GEORGE'S COUNTY

Prince George's County
Office of Emergency Preparedness
7911 Anchor Street
Landover, Maryland 20785 301-499-8050

QUEEN ANNE'S COUNTY

Queen Anne's County Emergency
Management Agency
308 Safety Drive
Centreville, Maryland 21617 — 410-758-0223

ST. MARY'S COUNTY

St. Mary's County Emergency
Management Agency
Emergency Operating Center
Box 271
Leonardtown, Maryland 20650 — 301-475-8016

SOMERSET COUNTY

Somerset County Department of
Emergency Services
424 North Somerset Avenue
Princess Anne, Maryland 21853 — 410-651-0707

TALBOT COUNTY

Talbot County Emergency Management Agency
Operations Center, Dispatch Room
605 Port Street
Easton, Maryland 21601 — 410-822-2223

WASHINGTON COUNTY

Washington County Civil Defense
and Disaster Preparedness Agency
33 West Washington Street
Hagerstown, Maryland 21740 — 301-791-3152

WICOMICO COUNTY

Wicomico County Emergency Management
and Civil Defense
401 Naylor Mill Road
Salisbury, Maryland 21801-9630 — 410-548-4820

WORCESTER COUNTY

Worcester County Emergency Services
Court House, L-14
Snow Hill, Maryland 21863 410-632-1312

OCEAN CITY

Management Coordinator
Ocean City Office of Emergency Management
P. O. Box 158
15th Street & Philadelphia Avenue
Ocean City, Maryland 21842 410-289-4346

TAB E

Communications

For the mariners, few things are as important as the weather, and obtaining accurate weather data can mean the difference between a safe, pleasant cruise and disaster. The National Weather Service provides mariners with continuous broadcasts of weather warnings, forecasts, and radar reports over VHF-FM radio. Reception range is usually up to 40 miles from the antenna site, depending on the terrain and the type of receiver and antenna you're using. The following list includes the VHF-FM stations for the Mid Atlantic Coast.

STATIONS IN AREA

Location	Channel	Location	Channel
Philadelphia, PA	WX-3	Lewes, DE	WX-1
Baltimore, MD	WX-1	Salisbury, MD	WX-3
Washington, D.C.	WX-1	Norfolk, VA	WX-1
Richmond, VA	WX-3	Cape Hatteras, NC	WX-3

Note: WX-1 is 162.55 MHz, WX-2 is 162.40 MHz, and WX-3 is 162.475 MHz.

These VHF-FM radio stations broadcast from tapes which are updated every 3 to 6 hours and amended as required. The broadcast contents vary, but in general contain the following:

- Description of the weather patterns affecting the eastern United States and coastal waters.
- Regional and state forecasts for surrounding area with outlook for third day.
- Marine forecasts and warnings for bay and coastal waters.
- Weather observations from selected National Weather. Service and Coast Guard stations.
- Radar summaries and reports.
- Local weather observations and forecasts.

- Special bulletins and summaries concerning sever weather, such as hurricanes.

- Tide reports.

WEATHER OFFICES IN AREA

Philadelphia, PA	*(215) 627-5575
Baltimore, MD	*(410) 936-1212
Annapolis, MD	*(410) 936-1212
Washington, DC	*(202) 936-1212
Richmond, VA	*(804) 222-7411
Norfolk, VA	*(804) 666-1212

* Recordings only

The following is a list of Public Coast Marine Operators currently licensed by the Federal Communications Commission. When calling one of the stations be sure to ask about all applicable charges before you complete your call. Be sure to keep a record of your calls. NEVER give your credit card numbers over the air. To reach the marine operator by land line, dial "O". Further questions should be directed to the FCC, Gettysburg, PA.

PUBLIC COAST MARINE OPERATORS

LOCATION	CALL SIGN	CHANNEL (VHF-FM)
Delaware		
Lewes	KVF 855	27
Odessa	KVR 460	28
Maryland		
Bodkin Point	KGD 518	25, 26
Ocean City	KSK 223	26
Cambridge	KRS 907	28
Prince Frederick	KSK 209	27
Ridge	KAQ 383	26
Virginia		
Hampton	KIC 631	25, 26, 27, 84
Norfolk	WHU 746	85
Norfolk	WHV 240	87

The National Weather Service issues marine forecasts every six hours, giving a general weather pattern for your area, plus a prediction of winds, seas, weather and visibility. For the marine broadcast telephone number in you area, check your phone book under U.S. Government, Dept. of Commerce, National Weather Service.

Marine Weather Service Charts give weather radio broadcast schedules, phone numbers for marine weather recordings,and more.
You can order the Marine Weather Service Chart for your boating area by sending $1.25 postage/handling to:

National Ocean Service
Distribution Branch N/CG33
Riverdale, MD 20737-1199
(301) 436-6990

SHORT WAVE BROADCAST

The National Weather Service and National Bureau of Standards cooperate in broadcasting high seas storm information from WWV, Fort Collins, Colorado as follows:

Times of Broadcast	Broadcast Area
8 Minutes past the hour 9 Minutes past the hour	Storm information for western North Atlantic, including Gulf of Mexico and Caribbean Sea.

The weather broadcast is in 45-second segments separated by a 15-second interval.
Broadcast frequencies - 2.5, 5, 10, 15 MHz

BROADCASTS OF MARINE WEATHER FORECASTS AND WARNINGS BY MARINE RADIOTELEPHONE STATIONS

Location	Station	Frequency (kHz/MHz)	Broadcast Time
Cape May, NJ	NMK (USCG)	2670 kHz 157.1 MHz	6:03 am & pm 6:03 am & pm
Chincoteague, VA	MNN-70	2670kHz 157.1 MHz	9:03 am & pm 6:45 am & 9 pm (Coastal Waters)
Hampton Roads, VA	NMN-13	2670kHz 157.1 MHz	8:33 am & 9:03 pm 6:20 am & 9:30 pm (Coastal Waters)

MARINE WEATHER REPORTING
MAREP

Location	Station	Frequency	Broadcast Time
University of Delaware	KTD-423	VHF Channels 16, 80A, & SSB-2096.5	7:30 am & 10:30 am 2:00 pm & 5:00 pm Local Time
Barnegat, NJ	KZJ-332	VHF Channels 1-18	7:00 am & 9:00 am Local Time

TAB F

Hurricane Response Checklist

ADMINISTRATIVE STAFF

PHASE FOUR

AUTOMATICALLY SET 1 JUNE THROUGH 30 NOVEMBER

_____ Review severe weather preparedness plan and update.

_____ Address areas of responsibilities and complete.

_____ Distribute and post revised severe weather preparedness plan.

_____ Brief marina personnel, tenants and volunteers on severe weather preparedness plan.

_____ Ensure pre-selected refuge moorings for boats are adequate.

_____ Coordinate plan's requirements with local authorities.

_____ Check first aid supplies and restock.

_____ Check emergency supplies and restock.

_____ Make vender list for rental and leased equipment.

PHASE THREE

72 - 48 HOUR PRIOR TO HURRICANE'S ETA

_____ Initiate hurricane warning and activate communication plans.

_____ Set up communications center (if one is planned).

_____ After phase three is set, release unnecessary marina personnel so that they can prepare their homes and gather their personal belongings.

_____ Notify tenants and volunteers of impending conditions.

_____ Work closely with harbor master and marina volunteers to update posted storm information and disseminate other information to employees, boat owners and volunteers.

_____ Process and mail all paperwork that can be completed immediately.

_____ Close marina stores to general public.

_____ Supplies must be earmarked for marina use at the first sign of a hurricane threat to avoid depletion of stock by customer demands.

_____ Begin preparation of marina grounds:

- Stock emergency food and water supplies.
- Check emergency generators, lighting, and fuel supply. Obtain additional generators if required.
- Check emergency equipment list. Arrange security staff schedule and volunteers.
- Secure outdoor furniture, large signs, flags, trash cans, carts, fire extinguisher, antennas and other loose items that can be affected by wind.

_____ Back up computers and store archive tapes with records to be removed.

_____ Start plans to evacuate personnel and equipment in flood prone (low-land) locations.

_____ Request other companies or concerns with supplies and equipment at the marina to remove them.

_____ Have supplies and equipment at other marinas brought back to the marina and secured.

_____ Notify any suppliers to hold shipment until after the storm.

_____ Have crane delivered for hoisting boats.

_____ Ensure first aid supplies are on hand.

_____ Arrange security staff and volunteers schedule.

PHASE TWO

48 - 24 HOURS PRIOR TO ETA

_____ Maintain position of hurricane in communication center.

_____ Maintain contact with local weather bureau/oceanographic center.

_____ Ensure marina is secured from non-essential traffic.

_____ Issue emergency supplies and equipment to crews as required.

_____ Move files and expensive equipment to higher shelves and drape with plastic.

_____ Implement check-in, check-out, and duty list for personnel entering and leaving the marina.

PHASE ONE

24 - 0 HOURS PRIOR TO ETA

_____ Secure marina.

_____ Coordinate status reports on hurricane position and intensities to crews, tenants and volunteer at marina.

_____ Evacuate marina if directed.

When Your Local Emergency Management Advises Evacuation -- Do So!

FACILITY AND MAINTENANCE STAFF

PHASE FOUR

AUTOMATICALLY SET 1 JUNE THROUGH 30 NOVEMBER

_____ Review severe weather preparedness plan, update and submit to administration.

_____ Address areas of responsibility and complete.

_____ Ensure that all essential vehicles and portable generators are operational and ready for use.

_____ Inspect buildings, piers, and wharfs.

_____ Inspect all storage sheds, outbuildings, and portable office trailers for proper tie-down.

_____ Inspect all emergency lighting systems and ensure they are operational.

PHASE THREE

72 - 48 HOUR PRIOR TO HURRICANE'S ETA

_____ Schedule marina's crew for storm duties. Include "shore leave" for crew to prepare homes and families at first notice of storm.

_____ Secure all dumpsters with tie-downs.

_____ Remove trash, scrap, and excess materials.

_____ Fuel all vehicles to 100 percent.

_____ Fill all gas and diesel fuel storage tanks.

_____ Clear all loose gear from wharfs and piers.

_____ Secure piers, docks and dry storage areas:

- Remove unclaimed trailers, boats and equipment from piers, docks and dry storage areas.
- Move drink, ice machines, etc. to higher grounds.
- Remove and secure trash cans from piers.
- Anchor portable buildings.
- Check cranes and sling hoist.
- Schedule and commit removal of boats by crane.
- Begin stripping removable boats and moving to hoisting area.
- Coordinate securing marina facilities, equipment and boats.
- Monitor the need to disconnect floating and fixed pier's power cables, water and fuel lines if tidal surge is expected. Be prepared to disconnect floating dock ramps and secure docks to fixed pier pilings.

_____ Police marina and dock areas to stow away or secure loose equipment and items that could become missile hazards in high winds.

_____ Secure all flammable, explosive or other hazardous materials.

_____ Remove boats and trailers in outside dry storage "racks". Secure with tie-downs when moved.

PHASE TWO

48 - 24 HOURS PRIOR TO ETA

_____ Inspect all work done in phase three.

_____ Begin evacuation of board boats and dinghies.

_____ Evacuate trailerable boats to predesignated area:

- Notify owners or remove with marina personnel.
- Arrange to have boats tied down after move.

_____ Evacuate non trailerable boats.

_____ Evacuate cruising boats.

_____ Secure dry stack storage area.

_____ Activate flotilla plans for removal of vessels to safer location.

_____ Board up all windows and glass doors.

_____ Remove or lock all dock boxes and check tie downs.

_____ Secure waterside sewage pumpouts. Turn off sewage grinder pump breakers at last call to evacuate marina.

PHASE ONE

24 - 0 HOURS PRIOR TO ETA

_____ Brief departing released personnel on recall procedures.

_____ Stage personnel who are schedule to ride out storm.

When Your Local Emergency Management Advises Evacuation -- Do So!

_____ Respond to last minute items.

_____ Secure fuel and oil tanks.

_____ Secure main switch gear to piers and low lying areas.

_____ Remove all excess gear from piers and dock area.

_____ When appropriate (extra high tide or storm surge expected) loosen floating dock ramps from hinges and secure.

_____ At last call, remove outside life rings and fire extinguisher from floats and other outside locations.

_____ Secure power to marina if evacuated.

TENANTS

PHASE FOUR

AUTOMATICALLY SET 1 JUNE THROUGH 30 NOVEMBER

_____ Review severe weather preparedness plan, update and submit to administration.

_____ Address areas of responsibility and complete.

_____ Update marina tenants severe weather preparedness questionnaire and return to office.

_____ Know your evacuation route and shelter plan.

_____ Ensure that your emergency gear is serviceable and ready for use.

PHASE THREE

72 - 48 HOUR PRIOR TO HURRICANE'S ETA

_____ Secure your boat in accordance with your pre-approved plan.

PHASE TWO

48 - 24 HOURS PRIOR TO ETA

_____ Evacuate the area.

When Your Local Emergency Management Advises Evacuation -- Do So!

VOLUNTEERS

PHASE FOUR

AUTOMATICALLY SET 1 JUNE THROUGH 30 NOVEMBER

_____ Review severe weather preparedness plan, update and submit to administration.

_____ Address areas of responsibility and complete.

_____ Participate in exercises of hurricane plan.

PHASE THREE

72 - 48 HOUR PRIOR TO HURRICANE'S ETA

_____ Man communication center.

_____ Assist in securing marina and boats as agreed upon.

PHASE TWO

48 - 24 HOURS PRIOR TO ETA

_____ Continue to man communication center.

PHASE ONE

24 - 0 HOURS PRIOR TO ETA

_____ Evacuate marina and return to family.

When Your Local Emergency Management Advises Evacuation -- Do So!

In a Natural Resources Emergency or for assistance, telephone (410) 267-7740, (410) 974-3181, or 1-800-628-9944, twenty-four hours a day.

The facilities and services of the Department of Natural Resources are available to all without regard to race, religion, color, sex, age, national origin, physical or mental disability.

NOAA COASTAL SERVICES CTR LIBRARY
3 6668 14111463 9