Final Report For

CHEBEAGUE ISLAND PIER IMPROVEMENTS

Submitted To The

Stone Warf Committee

TC
357
.C53
1988

Town Of Cumberland

July 7, 1988

COASTAL ZONE

INFORMATION CENTER

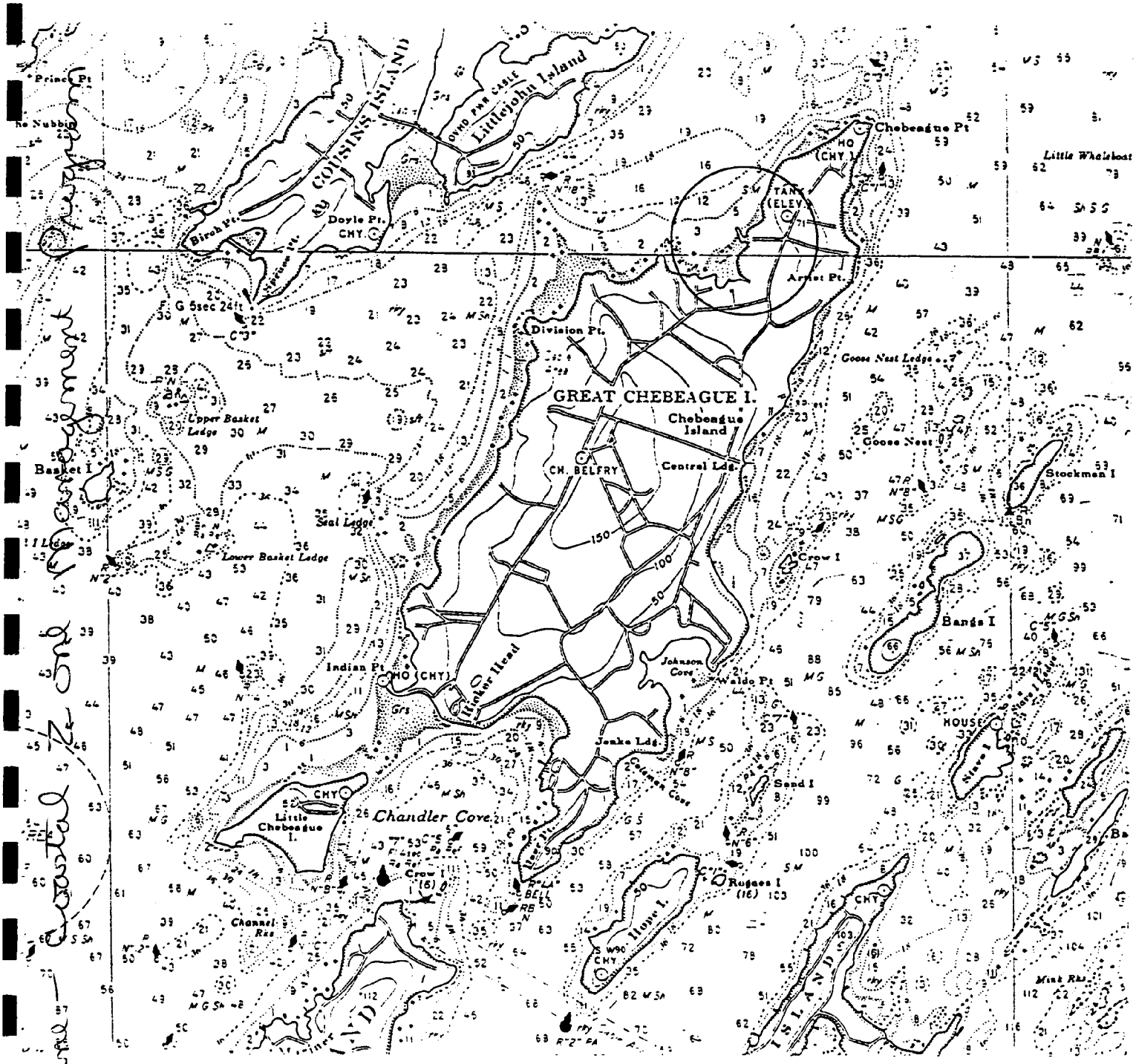

T.Y. LIN INTERNATIONAL

U.S. DEPARTMENT OF COMMERCE NOAA
COASTAL SERVICES CENTER
2234 SOUTH HOBSON AVENUE
CHARLESTON, SC 29405-2413

Property of CSC Library

CHEBEAGUE ISLAND PIER IMPROVEMENTS
CUMBERLAND, MAINE

FINAL REPORT
JULY 7, 1988

PREPARED FOR
THE STONE WHARF COMMITTEE
BY
T. Y. LIN INTERNATIONAL/HUNTER-BALLEW ASSOCIATES
CONSULTING ENGINEERS
FALMOUTH, MAINE

STATE OF MAINE
STEPHEN S. SAWYER JR.
3736
REGISTERED PROFESSIONAL ENGINEER

Financial assistance for preparation of this document was provided by a grant from Maine's Coastal Program, through funding provided by U.S. Department of Commerce Office of Ocean and Coastal Resource Management, and under the Coastal Zone Management Act of 1972, as amended.

TC357.C33 1988

T.Y. LIN INTERNATIONAL

TABLE OF CONTENTS

TITLE	PAGE NO.
BACKGROUND	1
THIS STUDY	1
STUDY GOALS	2
PRELIMINARY STUDY FINDINGS	3
FINAL PLAN	3
IMPLEMENTATION STRATEGY	10
PERMIT REQUIREMENTS	11
OTHER FUNDING SOURCES	12

LIST OF FIGURES

1 - Grouting Detail for Pier
2 - Barge Ramp and Wall Repair
3 - Wharf and Docking Improvements
4 - Rock Anchor with Soil Overburden
5 - Traffic Circulation
6 - Off-Site Parking
7 - Typical Pier Section
8 - Hoist Detail

TY LIN INTERNATIONAL

BACKGROUND

The islands in Casco Bay have not escaped the growth pressures affecting Coastal Maine communities. On Chebeague Island, which is part of the Town of Cumberland, seasonal residents and visitors are arriving earlier in the year and staying for longer periods. Recreational boat traffic around the Island is also increasing.

The main access point on the Island is a 19th century stone wharf. The wharf serves as a landing site for the Chebeague Island Transportation Corporation boat (the "Islander") and for barge traffic, including private cars and trucks, delivery trucks (e.g., oil, gasoline, building materials), and Town equipment and materials. The wharf is also a loading/unloading site for private boaters and a trap transfer point for lobstermen. Additionally, because electric power is available, boat repairs are undertaken at the wharf. Presently, a variety store and fuel storage tanks are also located at the wharf. As might be expected, traffic and parking at the wharf is severely restricted and often dangerous on busy days.

With the aid of a Coastal Program Grant from the Maine State Planning Office in 1980, the Town conducted a wharf study under the direction of a Stone Wharf Committee. The study consisted of a structural evaluation of the wharf and recommendations for improving congestion at the wharf. Many of the short term recommendations in the 1980 study have been implemented by the Town; these include widening the entrance to the wharf, paving and restriping the road surface, and providing full-time enforcement of parking regulations during the summer months.

As island use has continued to grow, a greater strain is being placed on the wharf, and more significant measures are needed to relieve the congestion. During the Winter of 1986-1987, the Town Council asked the Stone Wharf Committee to formulate a long range plan. The plan was completed in May 1987 and included a recommendation for undertaking an engineering study of the wharf, widening the wharf road, and acquiring land on each side of the road. Subsequently, the Town council authorized the expenditure of $22,000 to collect baseline data (a hydrographic survey and assessment of subsurface soils) needed to assess feasible possiblities for expanding the existing wharf.

THIS STUDY

With the aid of the Coastal Planning Grant, the town undertook this study to analyze the baseline data that was collected in 1987 and to develop feasible solutions for improving the structural integrity, public safety, and overall access and useability of the stone wharf.

The Town hired T. Y. Lin International/Hunter-Ballew Associates (TYLI/HBA), Consulting Engineers, to work with the Stone Wharf Committee and Town Council providing technical assitance relative to development of a strategy to meet the identified goals and objectives of the community.

T.Y. LIN INTERNATIONAL

STUDY GOALS

A kick-off meeting was held on Chebeague with Stone Pier Committee members on February 28th to review the overall goals and objectives for the study and to provide the Engineers with a "shopping list" of items to be considered during their initial exploration of improvement alternatives. The Committee's list was as follows:

1. Stabilize the Existing Wharf

   a. Conduct a visual inspection of the existing pier to assess the current condition of the granite block structure.

   b. Review the recommendations of the 1980 "Chebeague Island Pier Restoration - Parking Master Plan", Report by Wright-Pierce.

   c. Provide an updated assessment of the stone pier's condition and budget estimates for any recommended stabilization work.

2. Relocate the Store and Fuel Tanks off the Pier

   a. According to the Committee, the existing store is not sound enough to be moved and, thus, a new structure with the same square footage should be assumed for planning purposes.

   b. The two existing steel fuel tanks are: 1 - 2000 gallon tank for kerosene and 1 - 3000 gallon tank for No. 2 fuel oil. The goal would be to relocate these off the pier and run lines from the pier to the new tank location to permit continued filling of the tanks by the fuel boat from Portland Harbor Fuel Co.

3. Provide Off-Site Parking

   a. The goal would be to remove all long term parking from the pier by constructing a new parking lot on a parcel of land northeasterly of the entrance to the pier. This parcel is currently owned by the Great Chebeague Golf Club. A total of 35 spaces in this new lot would equal the current number of spaces presently provided on the pier.

4. Separate Ferry Traffic from Other Wharf Traffic

   a. Extend the limits of the channel on the westerly side of the pier to permit the ferry to dock closer to shore where the existing pier is the widest.

   b. Develop traffic circulation plans that organize wharf vehicular traffic and provide unobstructed access to the outer portions of the pier for non-ferry users.

5. Widen Access Road

   a. Develop a plan for widening the existing pier access road by 8 to 10 feet so that two-way traffic could be maintained with parallel parking along one side.

6. Provide Additional Small Boat Storage Around the Pier

   a. Additional tie-up space is needed for small boats.

   b. Some form of wave protection for this berthing is desired.

   c. Any dredging should be to -5 elevation, i.e., 2 feet of water on a -3 foot tide.

7. Provide Additional Wharf Area

   a. Extend the pier to provide additional berthing and work area. Vessel berthing should consider a 6-8 foot draft and lengths in the 50-80 foot range.

   b. Provide pier extension at a higher deck elevation to prevent overtopping during storms and high tides.

8. Provide a Hoist at the End of the Pier

   a. See the hoist at the Freeport Town Dock.

PRELIMINARY STUDY FINDINGS

During the three weeks following the initial meeting with the Stone Wharf Committee, the engineering staff of TYLI/HBA studied all of the items contained in the above list and prepared alternative solutions to each for the Committee's review and consideration. These early findings were published in an interim report entitled Chebeague Island Pier Improvements, Cumberland, Maine, Presentation of Alternatives, March 18, 1988. This interim report served as the catalyst for numerous discussions among the Stone Wharf Committee, Island residents and the Town Council to determine the best approach for meeting each of the eight study objectives. By May 1, 1988, a consensus had been achieved and the Committee instructed TYLI/HBA to proceed with formulation of a "draft" final plan of action for addressing the needs of the pier. This "draft" final plan was the subject of two public forums on the Island, June 8 and June 27. The June 27th meeting was a formal public hearing.

FINAL PLAN

The final plan presented herein addresses each of the eight study objectives individually. A strategy for implementing the various components of the plan is presented in the following section of this report.

1. Stabilize the Existing Wharf

At low tide a visual inspection of the stone pier was performed by two structural engineers, one with 20 years of experience and the other, who is also a geotechnical engineer, with 35 years of experience. No signs of outward movement or excessive settlement of the stone walls were observed. With the exception of the westerly wall along the ferry dock, the granite walls were more or less plumb. The westerly wall's horizontal alignment is irregular but constant throughout its height.

A recurring problem that has raised concern on the part of the Town and Island residents as to the continued stability of the wharf is the appearance of pot holes in the bituminous surface overlying the fill between the granite walls. As was noted in the 1980 Wright-Pierce Report, this phenomenon is inherent to the nature of this type of structure. As the tide comes and goes, over time the smaller materials between the walls are washed out through the voids in the granite blocks causing sink holes in the bituminous wearing surface. If the pier were to be constructed today, a filter fabric would be placed along the inside face of the granite walls to retain the core material but allow the free flow of water through the walls, thus preventing the buildup of hydrostatic pressures.

The Town apears to have three alternatives for dealing with the present situation at the stone wharf:

- Do nothing;
- Seal voids in granite block walls;
- Excavate and replace interior fill.

Do Nothing

As has been stated previously, the exterior walls of the wharf exhibit no visible signs of distress that would indicate their failure is eminent. Voids do exist between the individual granite blocks which, if left as is, will continue to allow interior fill material to migrate outward from beneath the pavement and cause periodic pot holes to develop in the surface. Filling and patching of these holes as they develop will continue to be a maintenance item. Formation of a blacktop "roof" over an otherwise empty interior is unlikely since bituminous pavement by itself does not have the strength to span an appreciable opening under traffic loading.

The larger voids in the existing walls do raise concern in terms of moving ice, but the fact that no damage has occurred over the years indicates the existing wall systems can withstand the ice flows typical to the area.

Seal Voids in Granite Block Walls

This alternative is intended to stabilize the wharf in its present state by preventing further loss of interior material through voids in the perimeter granite block walls. Two methods of sealing voids appear feasible. The 1980 Wright-Pierce Report called for chinking the voids in the granite blocks with small stones. While this technique is certainly feasible, it would provide little protection against the loss of the finer materials contained within the core of the pier. Therefore, an alternate means of accomplishing this same objective but with greater likelihood of success has been suggested herein. This process involves injecting pneumatically applied concrete into the voids between the granite blocks. The concrete would fill the voids between and behind the granite blocks much the same as chinking with small stones but would provide a tighter seal so that the potential for continued loss of fine materials from the core of the pier would be eliminated. To ensure that a hydrostatic pressure does not occur, weep holes would be located periodically along the MLW line. A detail of this alternate process is shown on Figure 1.

Filling the larger voids in the existing walls by either of the above means would also decrease the potential for future ice flow damage to the existing structure.

Excavate and Replace Interior Fill

Inspections of the existing wharf's condition have been limited to exterior observations. Actual interior conditions are unknown. A third alternative would involve removing the existing bituminous surface and underlying core material, lining the exterior walls with filter fabric, and installing new fill material and pavement, properly sized to avoid exfiltration through the granite block walls. This alternative would also include sealing the larger voids between the granite blocks to guard against future ice flow damage.

Recommended Action

The three alternatives presented herein offer varying degrees of assurances regarding the future stability of the 100 year old granite block structure. These alternatives also involve a wide range of expenditures to achieve the desired objectives.

While the "do nothing" alternative may have sufficed in the past, the Stone Wharf Committee believes that now is the time to take more positive steps to ensure the long range

serviceability of the wharf. As the Town's engineers, TYLI/HBA supports this approach and recommends the following action be taken:

- Conduct random test pit explorations behind the block walls to determine the nature and extent of the existing core fill.

- Based on the results of the test pit explorations, develop a specific program for sealing the larger exterior voids in the block walls and correcting any noted deficiencies in the interior core fill.

Other related action that should be taken relative to the existing wharf structure includes removal of the timber logs at the base of the southwest portion of the pier and replacement with concrete, repair of the deteriorated concrete walls along the existing barge ramp (See Figure 2), and replacement of a portion of the east wall where the original cut stone has been replaced with round rocks which are not as stable. In addition, several "deadmen like" or "pile" structures should be constructed within the interior of the pier to provide a stable anchorage system for larger vessels using the pier.

2. Relocate Store and Fuel Tanks

Store - The existing wood frame store should be moved off the wharf to a new landside location at the entrance to the wharf. The exact site of the new location is dependent upon negotiations between the town and the Great Chebeague Golf Club for acquisition of additional public property at the entrance to the wharf. Any costs to the town for the store's relocation would be subject to negotiations between the Town and the store owner. The final location of the store should not encroach within the Resource Protection Zone.

Fuel Tanks - The issue of relocating the two existing fuel tanks at the end of the stone pier has been resolved by deciding to have the Island's fuel distributor acquire an additional truck(s). With an additional truck(s) the need for storage facilities at the wharf can be eliminated. Compensation to the Island's fuel distributor will be determined through negotiations with the Town.

3. Provide Off-Site Parking

The Stone Wharf Committee, after much discussion, has decided that the amount of parking at the wharf should be increased from the original goal of 35 spaces to a total of 60 spaces. In addition, all parking, with the exception of standing and drop-off parking, should be located off the wharf itself.

Recommended Action

a. Retain the existing parking along both sides of the wharf road at the entrance to the pier (22± spaces).

b. Provide an additional 35± spaces near the entrance to the wharf on property to be acquired from the Great Chebeague Golf Club. The exact location of this new site(s) will be determined through negotiations with the Golf Club and include provisions for the relocated store. Current zoning provisions should be consulted when selecting the final locations of both the store and parking facilities.

c. Provide three handicapped parking spaces near the CTC loading/ unloading ramp.

4. CTC Docking and Traffic Circulation

CTC Docking - Once the store is moved from the pier, the CTC ferry berth could be moved closer to the shore where the existing pier is wider and there is better opportunity to improve vehicular circulation. An examination of the soil probings done during the Summer of 1987 revealed that the existing channel on the west side of the pier could be extended approximately 140 feet without blasting any ledge. Underwater rock removal is extremely expensive and rarely economical. With the channel extended, a small gravity type access pier could be constructed with a ramp and float arrangement to provide berthing for the CTC ferry much the same as it is today. (See Figure 3) The proposed 9' channel depth allows for the ferry draft of 6' plus 3' for silting and pounding due to wave action at MLW. The expanded channel would provide 90'± width for berthing the 52' long ferry.

The mooring float would need to be supported sufficiently to anchor the ferry while docked and to aid the vessel in maneuvering during landings and departures. Due to the presence of shallow bedrock in this area, the anchoring system for the float would need to be a specialized system such as two steel pipe piles on each side of the float socketed into the underlying rock. (See Figure 4) The float itself should be constructed of concrete and/or steel, rather than wood to be better able to withstand the berthing loads of the CTC ferry. Several such prefabricated systems exist on the market today.

The Town should contact the CTC to ensure that a smooth and orderly relocation of their docking facilities can be achieved and to discuss the potential for some cost sharing on the part of the CTC relative to the provision of new docking facilities for their vessel.

Traffic Circulation - Utilize a counterclockwise traffic circle concept for the moving travel lanes on the pier in the area of the ferry berth. (See Figure 5) Standing and drop-off parking, as well as handicapped parking, could be provided on the pier itself with this arrangement. The center island would be painted with yellow stripes, indicating that it was not to be used for parking and, further, it could be delineated with removable steel bollards if necessary to reinforce its non-use.

The existing barge ramp is shown in Figure 5 to be relocated approximately 10 feet out into the water to provide additional maneuvering room on the pier surface. While desirable, this ramp relocation is not absolutely critical to the performance of the proposed circulation concept.

5. Widen Access Road

Parking is currently permitted along one side of the access road to the stone wharf. When this parking is utilized, the effective width of the access road is reduced to one-way traffic. This becomes a significant impediment to free flow of movement onto and off of the pier during the summer months. To address this situation, investigations into widening the roadway within the existing right-of-way to provide for two-way traffic and parallel parking have been conducted. The results of these investigations indicate that it is indeed possible to provide the necessary roadway and parking width (30± feet) within the existing 50 foot public right-of-way. (See Figure 6) In excess of 35 spaces would be possible if the entire roadway were widened to permit parallel parking and two-way traffic. A final decision as to the desirability for widening the access road, however, should await the outcome of negotiations between the town and Great Chebeague Golf Club relative to the proposed acquisition of land for the store and off-site parking mentioned earlier in this report.

6. Small Boat Storage

The easterly side of the proposed wharf extension is designated for storage of small boats. (See Figure 3) A sheltered basin would be created for this area by providing two timber pile wave screens, one extending easterly off the northerly end of the extended wharf, and the other positioned to the east and oriented east-west to provide shelter from the northeast. Docking for the small boats would be provided by floating timber docks anchored by guide piles, similar in nature to a typical marina.

7. Additional Wharf Area

A timber pile-supported section 100' x 22' oriented in line with the westerly face of the existing wharf was selected as the most

reasonable means of increasing the present wharf area. (See Figures 3 and 7) The 22' dimension was felt to be the minimum practical width to permit two-way vehicular traffic. The 100' length was selected to permit ample docking space for 50' to 80' vessels on the westerly side and to allow the creation of a reasonable basin on the easterly side for sheltering small boats out of the way of the existing pier's easterly face which is used for beaching larger boats for repairs. The orientation was chosen to avoid the need for channel dredging. The timber construction was judged to be the least costly to construct and the easiest to maintain.

The elevation of the new pier would be provided at 15 feet above MLW, or about 3 feet above the stone wharf. The reason for this higher elevation is to protect the pier from uplift wave action during extreme high tides. The cost of additional pier reinforcing could be evaluated during the final design process to see if an economical means of further reducing the height of the new pier would be possible. If the new pier is constructed with a higher deck elevation than the existing wharf, the new pier would be accessed by a ramp over the existing pier supported by piles driven to bedrock.

The timber design for the new pier should be developed in accordance with H-20 loading. This heavy type design would provide the Island with a sturdy pier more than capable of accommodating the anticipated loads.

8. Hoist

Details of the hoist, as observed at the Freeport Town Dock, are shown on Figure 8. The hoist has a 2 ton lifting capacity with an 11 foot reach. Locating the hoist on the northwest corner of the new pier appears to provide maximum flexibility for loading and unloading operations.

Summary

Item	Expected Construction Cost
1. Stabilize the Existing Wharf	$ 50,000 - $ 75,000*
2. Relocate Store and Fuel Tanks	Unknown
3. Provide Off-Site Parking	
(20 Spaces)	$ 13,000 - $ 18,000*
(15 Spaces)	$ 10,000 - $ 13,000*
4. CTC Docking and Traffic Circulation	
CTC Docking	$120,000 - $130,000
Traffic Ciculation	$ 16,000 - $ 22,000*
Relocated Barge Ramp	$ 15,000 - $ 20,000
5. Widened Access Road	$ 15,000 - $ 20,000*
6. Small Boat Storage	$120,000 - $130,000
7. Additional Wharf Area	$380,000 - $400,000
8. Hoist	$5,000

The construction cost figures above are intended to be representative of the private market's cost to do the work. The amounts identified with * are those tasks that may be able to be accomplished by Town Public Works crews at a reduced cost from the amounts listed above. No attempt has been made to include land acquisition, legal fees, or final engineering costs in these construction cost figures.

IMPLEMENTATION STRATEGY

Several external factors will influence the Town's ability to implement the eight components of the final plan. These include separate negotiations with the Great Chebeague Golf Club, owner of the store, and Chebeague Island fuel distributor. As such, the following implementation program has been prepared to recognize these issues:

		Target Date
1.	Town Council endorses the final plan	July 1988
2.	Town negotiate with golf course, fuel distributor, CTC, and store owner	Summer/Fall '88
3.	Conduct explorations within existing wharf fill	Summer 1988
4.	Finalize plans to address Items 2, 3 and 5 of the plan	Fall/ Winter 1988-89
5.	Issue RFP for items requiring final engineering design	Fall/ Winter 1988-89
6.	Acquire additional property	Winter 1988-89
7.	File permits for pier construction	Spring 1989
8.	Apply for Waterfront Action Grant	Spring 1989
9.	Town forces construct Items 3 and 5 and move store and fuel tanks	Summer 1989
10.	Complete engineering design work	Fall 1989
11.	Advertise pier improvements (Item 4) for construction (new CTC dock and dredging)	Fall/ Winter 1989-90
12.	Apply for Waterfront Action Grant	Spring 1990
13.	Construct new CTC dock and dredging	Summer 1990

T.Y. LIN INTERNATIONAL

	Target Date
14. Advertise pier improvements (Items 6, 7 and 8) for construction (wharf extension, small boat basin and hoist)	Fall/ Winter 1990-91
15. Construct wharf extension, small boat basin and hoist	Summer 1991

PERMIT REQUIREMENTS

The Maine Department of Environmental Protection (DEP), U.S. Army Corps of Engineers (COE) and the Bureau of Public Lands have been contacted for their initial assessment of the permits needed in order to proceed with the improvements at the wharf. Each agency was asked for their assessment based on the following proposed work:

- Wharf extension of approximately 22' x 100' supported on piles.
- 2,000 of dredging in the vicinity of the wharf.
- Extension of the existing boat ramp.

A joint application form which addresses all State and Federal permitting requirements involving DEP and COE is available. The permit application specifically includes the DEP Application for Wetlands Alteration Permit and Water Quality Certification; the COE Permit Application required under Section 10 of The Rivers and Harbors Act, Section 404 of The Clean Water Act and Section 103 of P.L. 92-532. The permitting process provides public agency review of work that alters or obstructs navigable waters as well as review of dredging and filling work. A bulk sediment analysis must be conducted on the dredged material, the details for disposal of the dredged material must be presented and the results of the analysis must be submitted to the COE for their review. There are certain bulk sediment analysis exceedence levels beyond which the COE will require a bioassay to be conducted so that a more thorough understanding of the impact that dredged material may have on the marine environment may be acquired. The application must include a descriptive narrative of the project, the dimensions of the project work, quantities of fill and dredging, documentation of ownership (deed) or right to the land, a list of abuttors and other information that may be pertinent.

It should be expected that certain conditions will be imposed on the conduct of the work by the reviewing agencies, such as limiting the time of year during which dredging may take place in order to mitigate impact to seasonal changes of marine life. Such conditions which can now only be speculative may interfere with the schedule or expectations of the Town and should be accounted for.

A municipal lease which is issued by the Bureau of Public Lands must be acquired. The Bureau is automatically included in the application review

process by the DEP and need not be contacted separately. The fee for a 30 year lease for structures below MLW greater than 500 square feet is $25.00. A dredging lease will be required at a cost of $75.00. If the Town elects to sell the dredged material, the Bureau will assess an additional charge based on the volume sold. Additional annual fees will be required if the Town charges any fees for use of the facilities, such as for boat slips.

A permit from the Portland Harbor Commission will be necessary if dredged material is dumped within their jurisdiction.

No permit is necessary from the Coast Guard, but they must be contacted prior to construction if navigation will be impeded or altered in order that a Notice to Mariners may be posted and to assure that precautionary measures are taken in the vicinity of proposed work. The Coast Guard is automatically contacted by the COE during the permit review period for their comments on the project.

OTHER FUNDING SOURCES

Discussions were held with the Department of Community Development, Office of Community Development in Augusta, that administers Maine's Coastal Program to explore the potential for State and Federal assistance in implementing the strategy outlined herein. The result of these discussions was that, at this time, the only likely prospect for financial assistance lies with the "Waterfront Action Grant Program" which is administered by the same agency that oversees the "Coastal Planning Grants", by which this study was partially funded. It is recommended that soon after the Town adopts the final plan for pier improvements, it arrange a meeting with Ms. Lee Doggett in Augusta to discuss in detail how best to package the Chebeague project in terms of maximizing assistance from the Waterfront Action Grant Program.

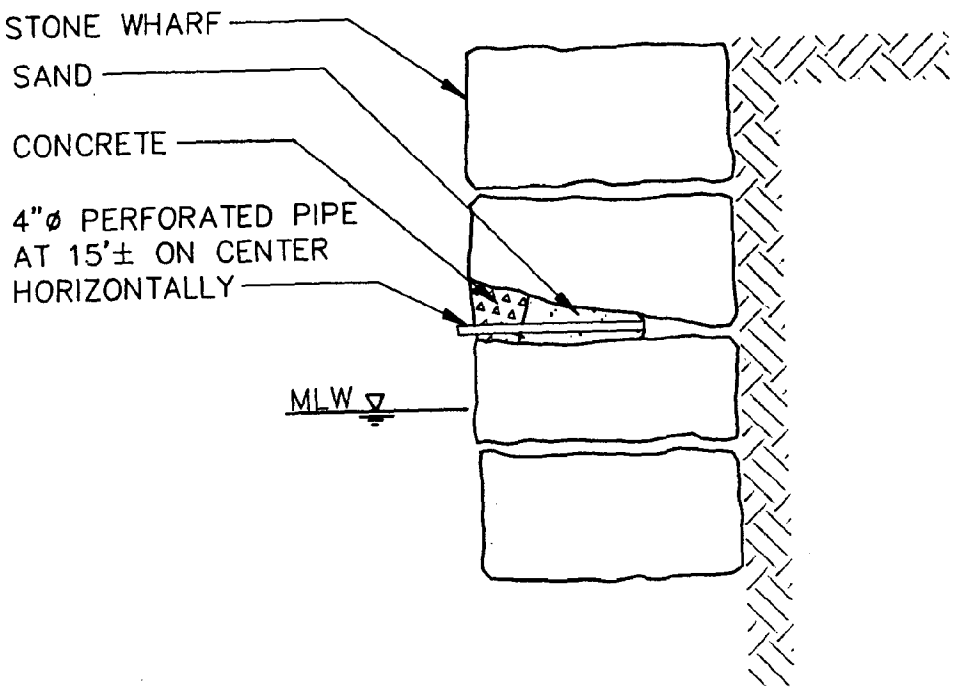

GROUTING DETAIL
FOR PIER
FIGURE 1

BARGE RAMP AND WALL REPAIR

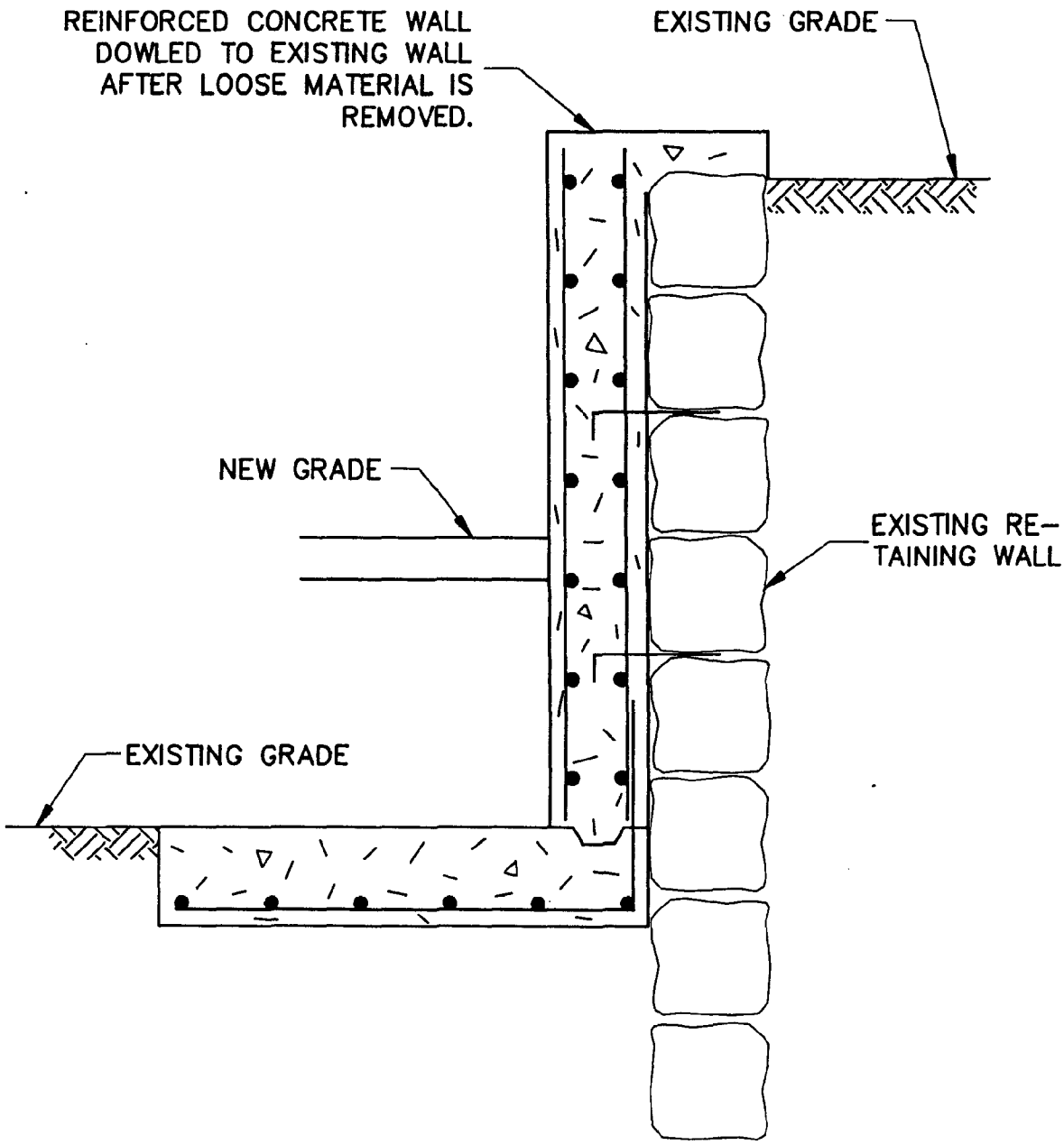

SECTION A–A

(SEE FIGURE 4 FOR LOCATION)

FIGURE 2

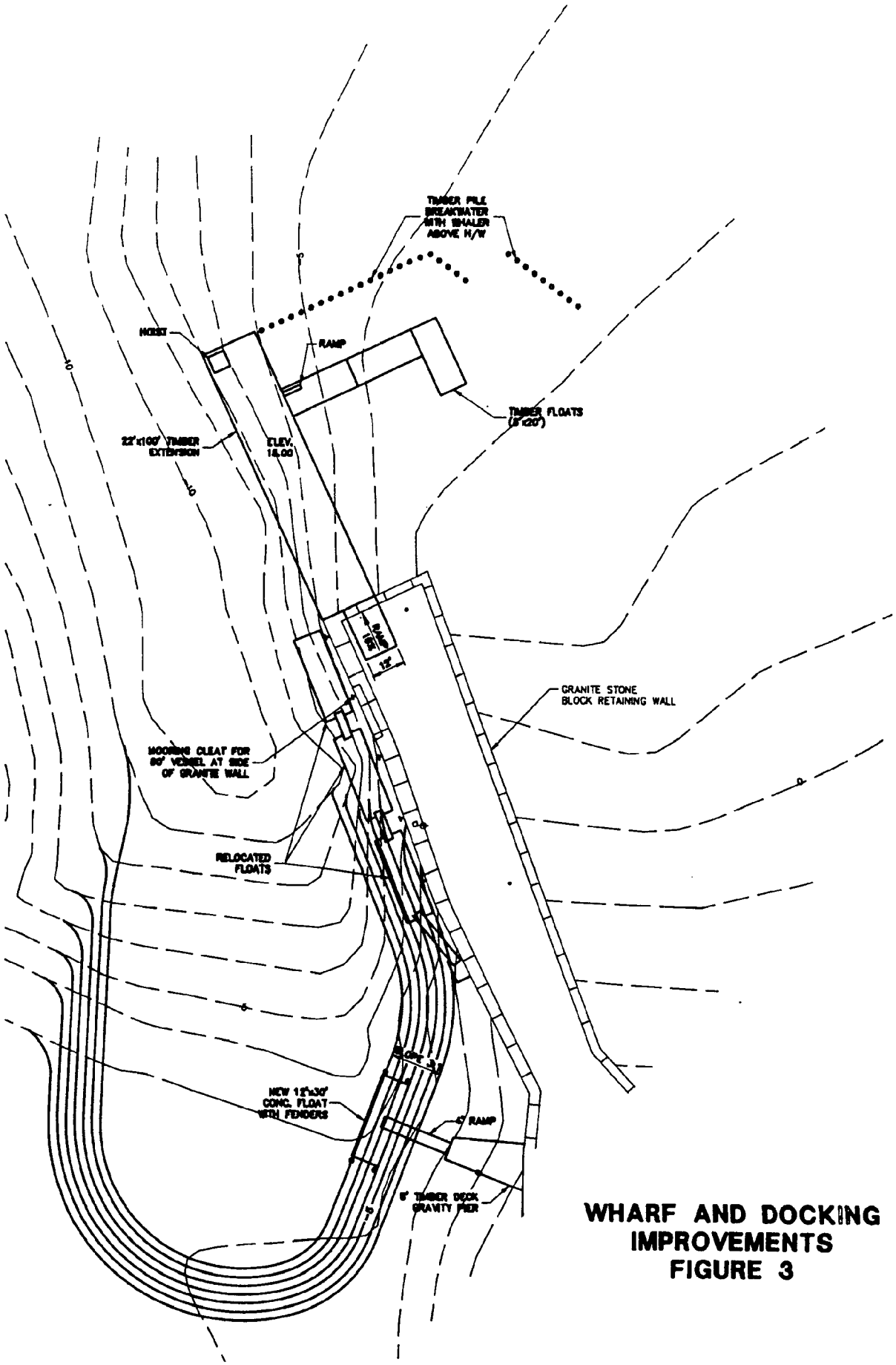

WHARF AND DOCKING IMPROVEMENTS
FIGURE 3

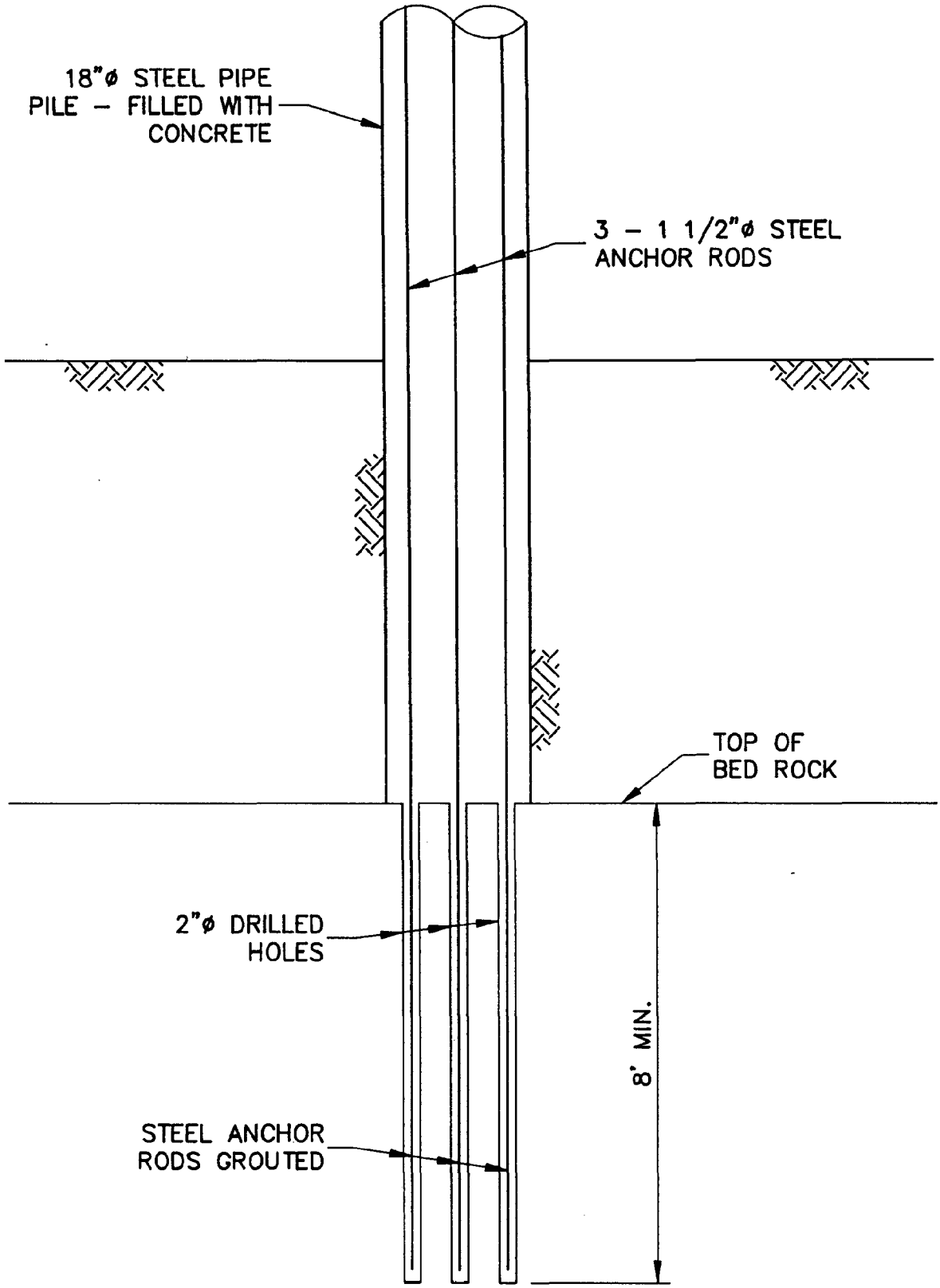

ROCK ANCHOR WITH SOIL OVERBURDEN

FIGURE 4

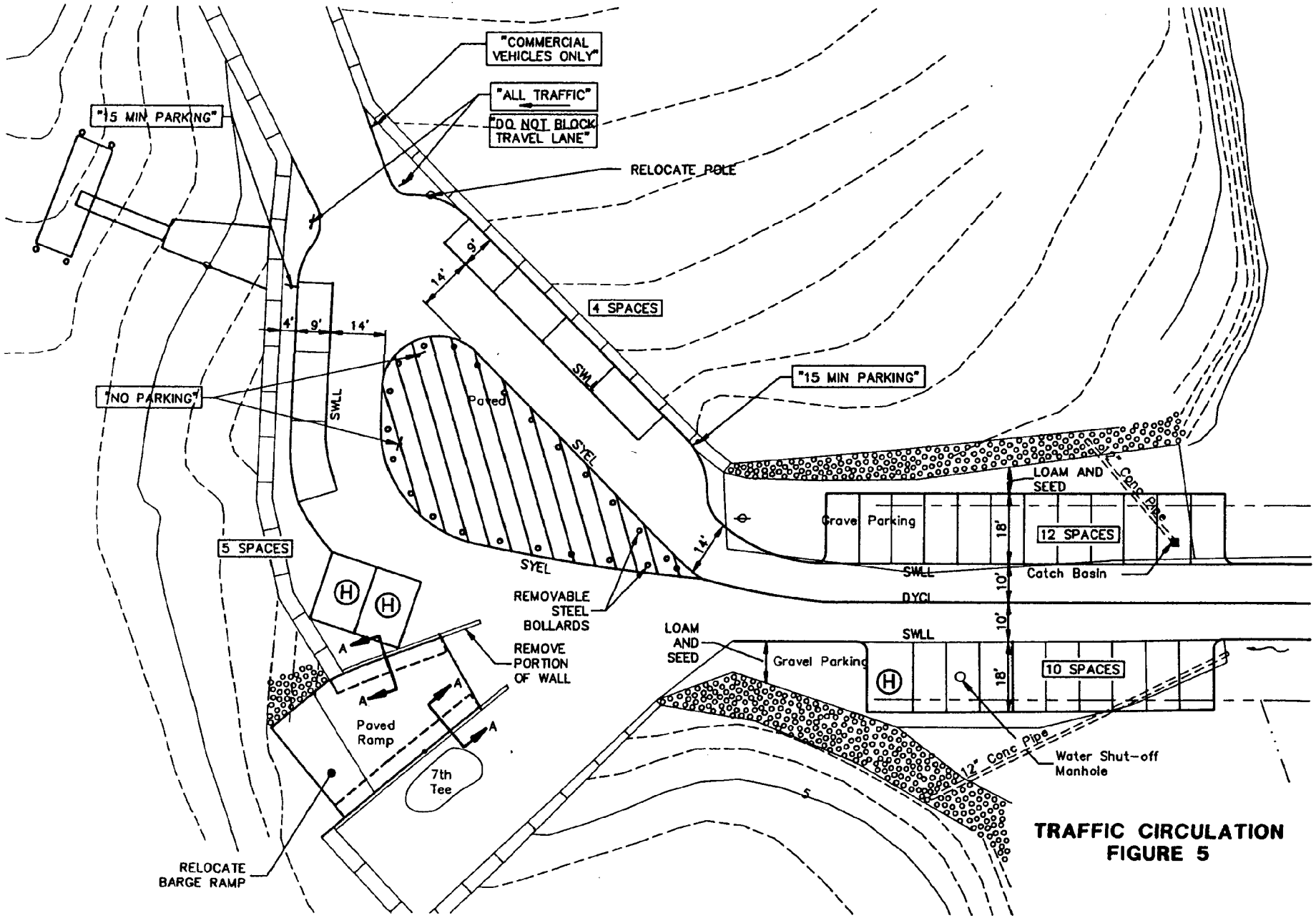

TRAFFIC CIRCULATION
FIGURE 5

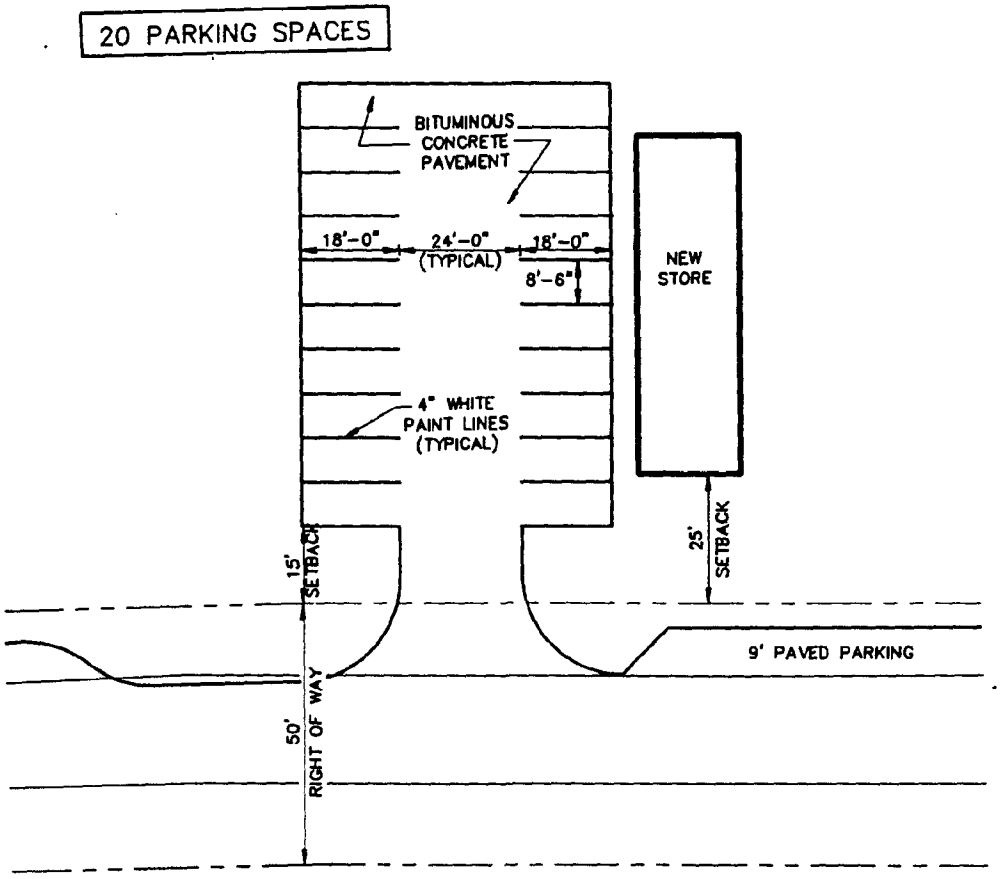

OFF-SITE PARKING
FIGURE 6

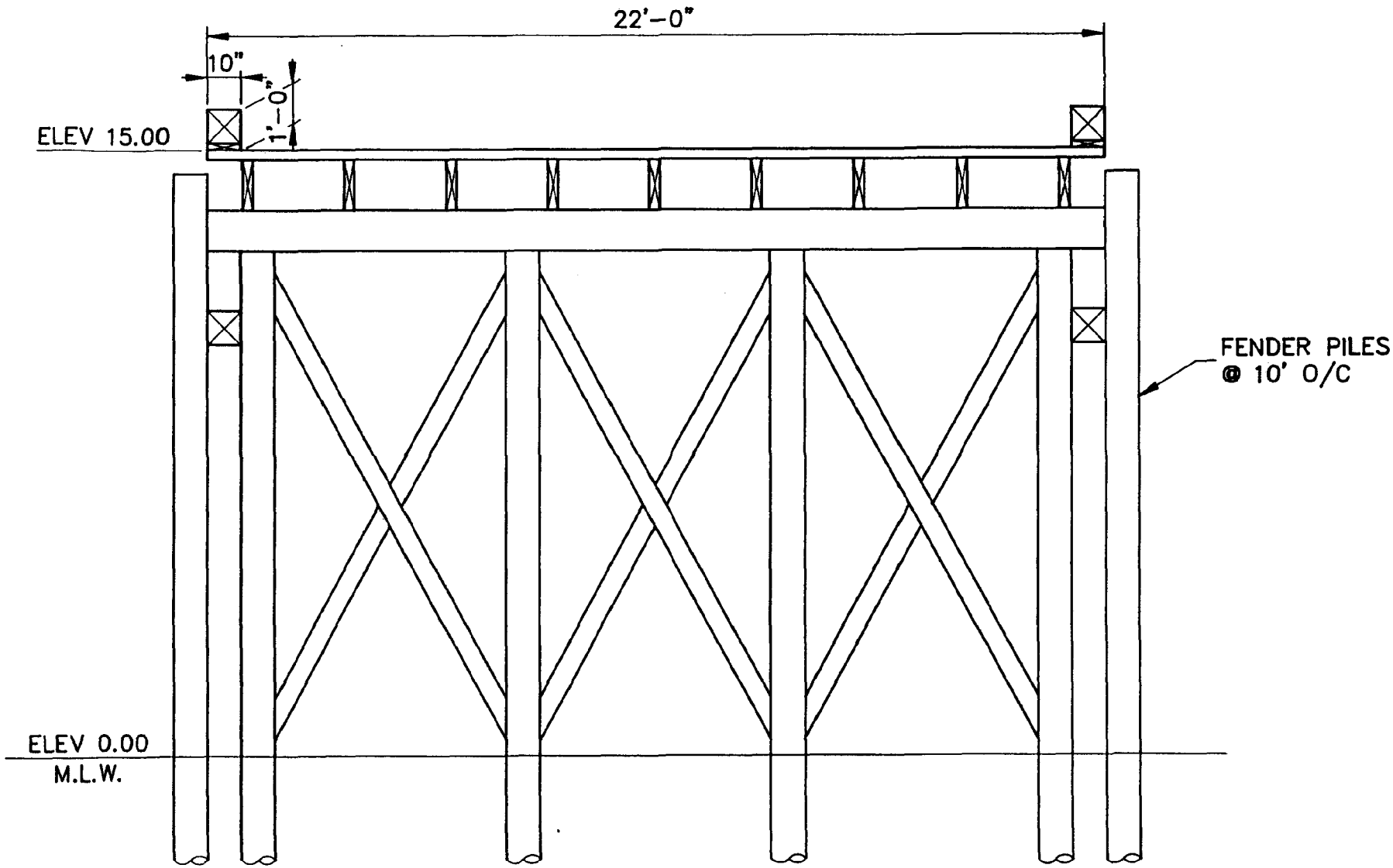

TYPICAL PIER SECTION

FIGURE 7

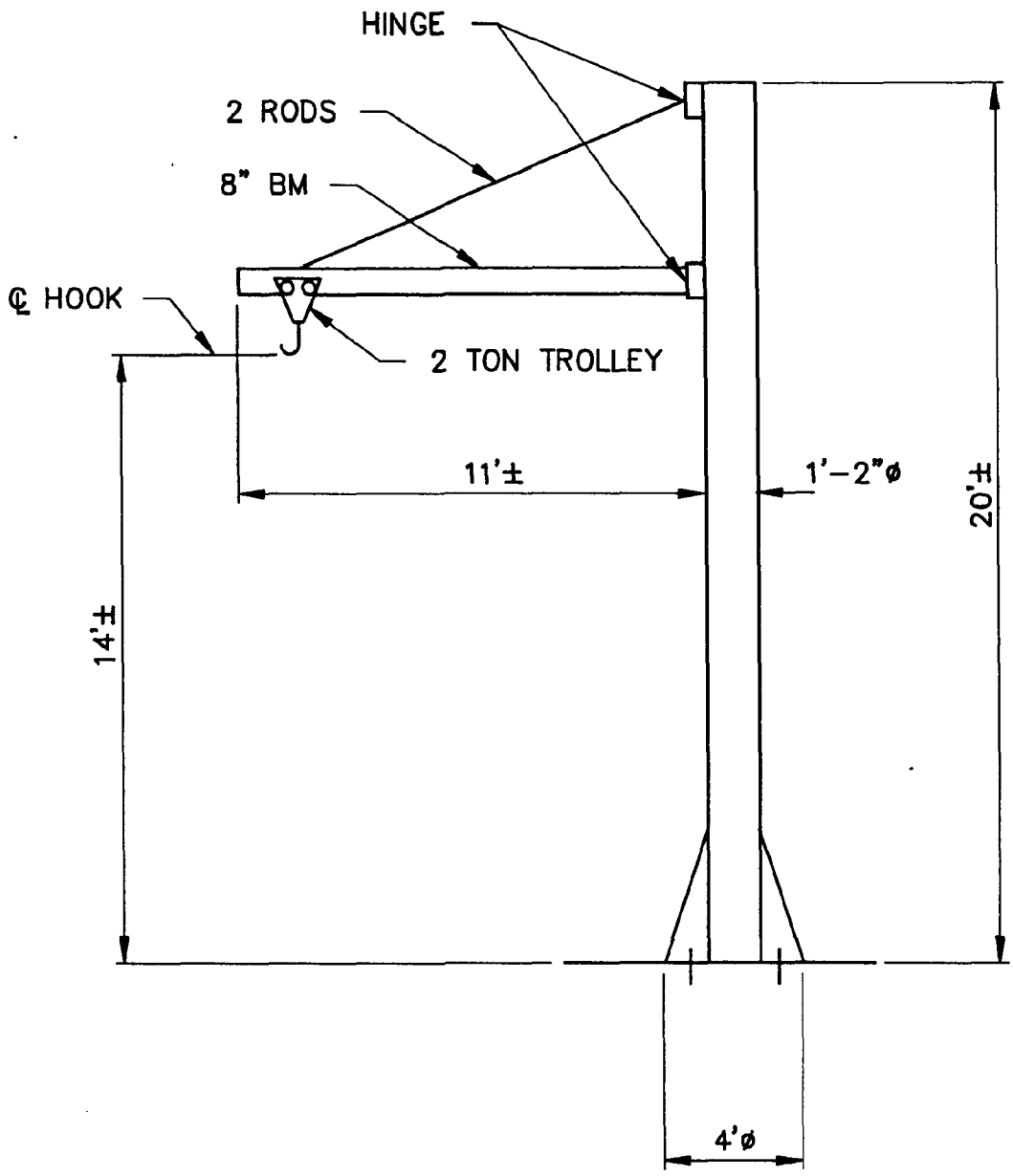

HOIST DETAIL

FIGURE 8

DATE DUE

GAYLORD No. 2333 PRINTED IN U.S.A.

NOAA COASTAL SERVICES CENTER LIBRARY

3 6668 14106 9403