PUGET SOUND WETLANDS AND STORMWATER MANAGEMENT RESEARCH PROGRAM: SECOND YEAR OF COMPREHENSIVE RESEARCH

Sarah S. Cooke
Klaus Richter
Richard R. Horner

Resource Planning Section
of
King County Parks, Planning and Resources Department

July 1989

Property of the Library

U.S. DEPARTMENT OF COMMERCE NOAA
COASTAL SERVICES CENTER
2234 SOUTH HOBSON AVENUE
CHARLESTON, SC 29405-2413

The preparation of this report was financially aided through a grant from the Washington State Department of Ecology with funds obtained from the National Oceanic and Atmospheric Administration, and appropriated for Section 306b of the Coastal Zone Management Act of 1972.

QH
87.3
.C66
1989

QH87.3.C66 1989

ABSTRACT

1.Title: Puget Sound Wetlands and Stormwater Management Research Program: SECOND YEAR OF COMPREHENSIVE RESEARCH

2.Author(s): Resource Planning Section, King County Parks, Planning and Resources Department, 707 Smith Tower Building, 506 Second Avenue, Seattle, Wa. 98104

3.Subject: Final grant completion report describing the implementation of a long-term research program to determine the feasibility of using urban freshwater wetlands for stormwater management and nonpoint source pollution control.

4.Date: July 1989

5.Name of the Department and participating localities: State of Washington Department of Ecology, and King County Parks, Planning and Resources Department.

6.Sources of copies: Available from the Author.

7.WDOE Project Number: G0089028

8.Series Number:

9.Number of Pages: 43 plus 83 appendices

10.Abstract:

This report describes the accomplishments under the fourth phase of a research program for the Puget Sound region concerning the role of wetlands in urban stormwater management, and the implications for wetlands ecosystems. The project is guided by a regional interdisciplinary, interagency committee and is being carried out by regional experts in each sub-study field. Goals accomplished during this phase are: 1) final selection of experimental wetlands pairs (urbanizing sites and controls); 2) implementation of comprehensive long-term research on the impacts of urban stormwater on the soils, microbial activity, and zoology of wetlands ecosystems; 3) collection of the baseline year's data (some seasonal) for each sub-study; and 4) analysis of results from the research to date and incorporation of those results and their tentative interpretation in a management system that is being developed under other funding. Pending receipt of funding support, the next steps will be to continue to conduct the research outlined above to determine the short- and long-term impacts of urban stormwater runoff on wetlands ecosystem functioning.

TABLE OF CONTENTS

	Page
INTRODUCTION	
Project Background	1,2
Objectives	
General	2,3
Specific Work Plan	3
Research Site Selection Process	3-5
EFFECTS OF URBAN RUNOFF ON WETLANDS SOILS, BASELINE INVESTIGATION	
Introduction	6
Objectives and Hypotheses	6,7
Research Methods	
Schedule	7
Sampling Soil Cores	8
Sampling Microtox	8
Sampling Litter Decomposition	8
Analyses	
Soil Cores	8
Litter Decomposition	9
Results	
Physical Characteristics	9-10
Chemical Characteristics	11
Microtox	11
Litter Decomposition	11
References	12
EFFECTS OF URBAN RUNOFF ON WETLANDS ZOOLOGY, BASELINE INVESTIGATION	
Introduction	13
Objectives	13,14
Macroinvertebrates	
Hypotheses	14,15
Research methods	15
Results	15-19
Amphibians	
Hypotheses	20
Research methods	20
Results	20-24
Birds	
Hypotheses	25
Research methods	25
Results	26-32
Small mammals	
Hypotheses	33
Research methods	33
Results	34-41

	Page
References	42,43

APPENDICES

A. Soils Methodology	
1. Core Sampling	1-4
2. Microtox Analysis	5
3. Redox Potential Sampling	6
4. Redox Potential Laboratory Analysis	7-10
5. Particle Size Analysis	11-19
6. Organic Content, Nitrogen, Total Phosphorus	20-24
7. Metals Analysis	25
8. Litter Content Analysis	26-37
B. Soils Data	
1. Particle Size Analysis	38,39
2. Cores, Redox Potential, pH, Color	40
3. Nitrogen and Phosphorous, and LOI	41,42
4. Metals	43-49
5. Microtox	50
6. Litter Content	51
C. Zoology Data	
1. Aquatic Invertebrates	65
2. Aquatic Invertebrate Taxonomy	66-72
3. Adapted Bird Protocols for 1989	73-74
4. A Proposed Methodology for Monitoring Mammalian and Herpetofaunal Populations in King County	75-82
D. Project Publications	83

TABLES

1. Puget Sound Wetlands and Stormwater Management Research Program Study Sites	5
2. Wetland Soil Types	10
3. Emerging Arthropod Densities	18,19
4. Common, Scientific, and Code Names of Amphibians Identified in Surveys of 14 Wetlands	21
5. Fall 1988 Summary of Adult Amphibians Captured in Sherman and Pitfall Traps	22
6. Spring 1988 Summary of Amphibian Egg Cluster Counts Within the Wetlands Surveyed	23
7. Amphibian Life History Information	24
8. Code and Common Names for Birds That May Use Wetlands in the Puget Sound Area	27
9. Numbers of Bird Species Identified in Autumn 1988 and Early Spring 1989	28
10. Distribution and Abundance of 1988	29,30

	Page
10. Distribution and Abundance of 1988 Autumn Censused Birds	29,30
11. Distribution and Abundance of Early Spring 1989 Censused Birds	31,32
12. Common, Scientific and Code Names of Mammals Identified in Surveys of 14 Wetlands	35
13. Fall 1988 Pitfall Trap Capture Summary	36
14. Fall 1988 Sherman Trap Capture Summary	37
15. Fall 1988 Pitfall Trap Capture Summary per 100 Trap Nights	38
16. Fall 1988 Sherman Trap Capture Summary Per 100 Trap Nights	39
17. Fall 1988 Summary of Mammals Found Dead in Sherman and Pitfall Traps	40

FIGURES

1. Predicted Seasonal Macroinvertebrate Emergence Phenology	17

INTRODUCTION

PROJECT BACKGROUND

In response to accelerating development, and stormwater management problems, and the potential effects of these occurrences on remaining County wetlands, King County began a wetlands research program in 1986. The program was initiated because of the expectation that development patterns will change the quantity and quality of stormwater entering some wetlands via natural drainage courses. Stormwater management utilities in King County and elsewhere have raised the possibility of relying on wetlands in some instances to store and control the runoff rate of urban stormwater. It is postulated that wetlands could also remove and hold pollutants in stormwater, to the benefit of downstream water quality in Puget Sound, the ultimate sink.

Wetlands are recognized as biologically productive ecosystems offering extensive high-quality habitat for a diverse array of terrestrial and aquatic organisms, as well as having multiple beneficial uses for humans. While the potential of urban stormwater to affect the productivity, habitat quality, and beneficial use of wetlands can be hypothesized, there have been very few studies to document the existence or lack of such effects. This information gap may preclude more effective use of wetlands as nonpoint pollution control mechanisms and endanger overall wetland functioning. With these problems in mind the following general goal was established for the Puget Sound Wetlands and Stormwater Management Program:

*To determine the effects of urban stormwater discharge on wetlands, and as a corollary, the effect of wetlands on the quality of urban stormwater.
*To use the knowledge gained about these effects to develop sound policies and guidelines for effective utilization of wetlands for urban stormwater management and nonpoint source water pollution control.

To achieve this goal will require both gathering extensive scientific data and interpreting these data to devise policies and management guidelines that protect wetlands, and downstream water bodies. A comprehensive program has been designed to acquire the necessary data through investigations based on commonly accepted scientific practices, and then to apply the findings toward regulation.

With Coastal Zone Management (CZM) grants from the Department of Ecology, King County has completed several phases of a multiphase research program to investigate the viability of freshwater wetlands for use in urban surface water management and nonpoint pollution control. Phase I was completed in June, 1986; Phase II was completed in June 1987; Phase III was completed in June 1988; and Phase IV was completed in June of 1989.

In preparation for the detailed research that began in 1988, the preliminary Phases I and II were completed. Phase I consisted of a comprehensive literature review (Stockdale 1986a, and b, Stockdale and Horner 1987) concerned with the questions of urban stormwater impacts on wetland functions and water quality changes occurring when urban stormwater drains through wetlands. Phase II involved comprehensive observation, sampling, and analysis of 73 King County wetlands to assess if they have been impacted by urban stormwater runoff. Data analysis and development of some preliminary and tentative management guidelines was also a product of Phase I and II.

Phase III entailed initiation of the two major components of the research program:

1. Study of the long-term urban stormwater effects--as a multiyear monitoring experiment with replicate control/treatment units (unaffected by urban runoff versus affected wetlands) to investigate long-term ecological effects. The study of long-term effects involves monitoring of water level fluctuation; water quality; physical, chemical, and biological characteristics of wetland soils; and population and community characteristics of plants and animals.

2. Incremental research--laboratory or microcosm scale and short-term field experiments designed to meet specific objectives identified by the management needs survey conducted during Phase II.

The scope of work for Phase IV covered only specific tasks of the overall long-term project. These tasks involved the monitoring of the soils and the wetland animal communities, as well as some general staff support for the overall program. The remaining tasks were funded from other sources.

OBJECTIVES

General

The general objectives of Phase IV of the work were:

1. To implement the long-term research study in the specific areas of wetland soils and zoology. The initial implementation consisted of establishing permanent transects and stations for the respective tasks in each wetland pair previously selected.

2. To collect data for each sub-study during the July 1988-June 1989 field seasons.

3. To analyze the data generated during the 1988-1989 surveys of wetland pairs for baseline conditions in each wetland.

Specific Work Plan

1. Physical and chemical analyses of soils collected from approximately three locations in 14 wetlands on one visit during the summer of 1988 (additional sites were added later). Analyses included texture, organic content, nutrients, and metals.

2. Establishment of a litter decomposition study to examine long-term effects on soil microbial processes. The study involves three litter types with ten replicates each.

3. Censusing of birds present in all of the selected wetland sites on four occasions during the year.

4. Systematic survey of herpetofaunal eggs in each wetland during the spring.

5. Systematic fall survey of mammals in each wetland.

6. Identification and enumeration of emerging aquatic invertebrate taxa continuously collected in each wetland by emergence traps.

7. Analysis of the data collected during the baseline year for all of the sub-studies.

FINAL RESEARCH SITE SELECTION

Appendix A from the 1988 CZM report contains several documents used in the comprehensive study-site selection process followed prior to field work in 1988. These documents present the selection criteria, a preliminary list of sites selected, a form used for the initial assessment of candidate sites, and a right-of-entry form given to property owners. Table 1 lists the final wetland pairs selected. A pair includes a wetland that will be affected sometime after the summer 1988 survey (baseline year), and another wetland that matches the first in size and vegetation community complexity and that will most likely remain unaffected by urban development during the course of the study. The sites are designated as in the King County 1981 Wetland Inventory, or the Bellevue Wetland Inventory.

The sites were paired on the basis of morphological characteristics and vegetation community composition (open water, emergent, scrub/shrub, and forested community types). Due to lack of similarity in all characteristics, pairing was imperfect, but was attempted in order to allow potential comparisons between

pair members in many cases, as well as between aggregate control and treatment groups. The baseline year measurements will also be used to compare subsequent changes in sites where urban stormwater will be added. Five of the sites were added at the end of 1988 and so have no baseline data for 1988. Their baseline data will be from the 1989 field season.

Table 1. Puget Sound Wetlands and Stormwater Management Research Program Study Sites

Affected sites	Control sites
Big Bear Creek 24 (BBC24)	Snoqualmie River 24[a] (SR24)
Lower Puget Sound 9 (LPS9)	Lower Cedar River 93 (LCR93)
Snoqualmie River 24 (SR24)	Raging River 5 (RR5)
East Lake Sammamish 61 (ELS61)	Mid Green River 36 (MGR36)
East Lake Washington 1 (ELW1)	Harris Creek 13 (HC13)
East Lake Sammamish 39 (ELS39)	*Soos Creek 4 (SC4)
*Tuck Creek 13 (TC13)	*Soos Creek 84 (SC84)
*Klahanie East (KE)	*Ames Lake 3 (AL3)
Bellevue 3I (B3I)	Patterson Creek 12 (PC12)
Forbes Creek 1 (FC1)	unpaired
Jenkins Creek 28 (JC28)	unpaired

* Sites added late in 1988.

[a] Urbanization of the watershed will not occur in the early years of the program.

EFFECTS OF URBAN RUNOFF ON WETLANDS SOILS, BASELINE INVESTIGATION

INTRODUCTION

There have been few studies to document the existence, or lack, of effects of urban stormwater on the health of wetland ecosystems (Stockdale 1986). As part of this research, the soil- mineral, organic, and microbial components are being studied in order to understand better how these wetland components function in the overall maintenance of the ecosystem, and what happens to them when they are affected by urban runoff. Soils are important in an ecosystem as they provide the medium in which plants grow, and can also hold and store pollutants from stormwater. Alterations such as an increase in heavy metal content, increase in silt content over organics, change in redox potential, and/or change in pH, (especially lowering) can effect the quality of the vegetation growing on those soils and their suitability to support animal populations (Boto and Patrick 1979). The quantification of these soil and vegetation changes resulting from urban stormwater runoff will help researchers to understand its effects on soils, and the corresponding effects on the wetland vegetation communities.

OBJECTIVES AND HYPOTHESES

The work discussed in this report represents the establishment of a baseline for a long-term data base that is being collected to achieve the following objectives:

1. To document the baseline soil conditions in the selected wetlands for pH heavy metal content, particle size distribution, organic content, nutrient regime, redox potential, and microbial activity.

2. To determine the degree to which urban stormwater affects these wetland soils characteristics, and to determine the rate at which these changes occur.

3. To gain an understanding of the mechanisms of change in the wetland soils subject to urban stormwater, with emphasis on the relative susceptibility of the representative soil types to change.

4. To gain an understanding of how any changes in the soils of these wetlands affects the different vegetation community types.

These objectives suggest a number of hypotheses that will be tested in the course of the long-term research, as follows:

1. Water whose quality is modified by urban stormwater runoff will change the chemical, physical and/or structural characteristics of the wetland soils under some, but not all conditions.

2. Flood storage and the attendant hydrologic modifications will change the redox potential and possibly the pH and chemical composition of the soils in those wetlands under some but not all conditions.

3. Metal accumulation will be found to some degree in the soils of wetlands with urban stormwater input.

4. Flood storage and subsequent silt loading will increase the small particle composition of the soils in some but not all conditions.

5. Habitat value for some plant communities and some plant species will decrease when wetlands are used for stormwater storage, due in part to changes in soil properties directly related to the stormwater storage.

RESEARCH METHODS

Schedule

Soil core samples were collected during the month of August 1988. The soil cores will be sampled at approximately the same period in subsequent years. It is planned that monitoring will continue until it is established whether or not long-term effects occur in the soils of the affected wetlands. It is expected that five years of monitoring will be necessary. The litter decomposition experiment was established in September 1988. Samples will be removed in subsequent Septembers (1989, 1991, and 1993). Microtox samples were collected during the fall of 1988. Samples will be collected each August for the remaining years of monitoring.

Sample Collection

Detailed description of methodologies are in Appendix A.

Soil cores. (Appendices A1 and A3). Soil cores were collected for assessment of physical and chemical soil characteristics. P V C pipes, 6.5 cm (2-9/16 inch) diameter were used to collect 15 cm long (minimum) soil cores in wetland soils at every point along the vegetation transect where the soil or vegetation types appeared to be transitional or to change completely. The cores were collected at a 3 meter offset from the transect line, and sample locations were accurately marked so that cores can be taken from the same area in succeeding years. These soil core samples were placed in air-tight sample bags and refrigerated.

Microtox. (Appendix A2). Microtox analysis is intended for use in determining acute toxicity in aqueous samples. The analyzer is used to make quantitative measurements of the response of living bioluminescent bacteria to toxic samples as evidenced by changes in the light produced by the bacteria (Beckman 1982).

Litter decomposition study. (Appendix D2 of the 1988 Phase III CZM report). The litter decomposition study is used to determine soil microbial activity. Litter was collected in four wetlands during the 1988 Summer field season. Black plastic dropcloths were laid on the ground and conifer and broadleaf deciduous litter was collected from these during the Fall. Shrub litter was collected from the shrubs themselves at the end of the summer preceding leaf drop. *Phalaris*, an emergent herbaceous plant, was collected in the field and mixed with the shrub litter. The samples of 1) conifer litter; 2) broadleaf deciduous litter; and 3) emergent/shrub litter were each placed in large plastic bags and mixed so that each type was a homogeneous mixture. These samples were dried overnight at 38° C, weighed, and sewn into labeled polyester netting bags. Thirty replicates of each litter type were then placed along each wetland edge. Random samples were collected from each litter type for baseline chemical analysis. The sample bags are left in the field and ten bags will be removed after each of the first, third and fifth years of the study. Dry weight loss and nutrient content will be measured and will give a quantitative assessment of the effect of soil microbial activity.

Analyses

Soil cores. (Appendix A4). Soil pH, color, and redox potential were measured within six hours of collection. Cores were subsampled for the different analyses: particle size distribution (Appendix A5), organic carbon content assessment (Appendix A6), nitrogen and phosphorus (Appendix A6), and heavy metals (Appendix A7).

Litter decomposition. (Appendix A6, A8). Litter decomposition analysis consisted of digestion of the litter samples (Appendix A8a), analysis for carbon content (Appendix A6), nitrogen content (Appendix A8c, A8d), phosphorus content (Appendix A8e), and copper content (Appendix A8b).

RESULTS

Soil data can be located in Appendix B. The following section summarizes these data and includes some comments regarding their significance.

Soil cores--physical characteristics

Particle size analysis results are listed in Appendix B2.

Particle size analysis. Particle size analysis was performed on the cores taken from each wetland. Table 2 lists the soil types described in the wetlands based on their particle size distribution.

Table 2. Wetland Soil Types

Wetland	Soil Types Encountered
B3I	sand, loamy sand, and sandy loam
BBC24	loamy sand and sandy clay loam
ELS39	sedge peats
ELS61	sandy loam and loamy sand with pockets of mucky peat
ELW1	sandy loam, loamy sand, and silty loam
FC1	sandy loam, silty loam, loamy sand, and peat
HC13	sand and loamy sand
JC28	silt, loamy sand, and peat
LCR93	peat and mucky peat
LPS9	sand and mucky peat
MGR36	loamy sand, sandy loam, and silty loam
PC12	loamy sand, silty loam with pockets of sedge/grass peat, and mucky peat
RR5	loamy sand
SR24	sand and sandy loam with pockets of black mucky peat

Many of the wetlands contained, at a minimum, some pockets of peat soils, of primarily sedge/grass origin. Sandy soils were most often located in the stream beds that flowed through the wetlands. Examples of this soil type are B3I, HC13, LPS9, and SR24. The soils which had high silt content, were often at the edge of a flood input area. Examples of the latter are ELW1, where there is a drainage ditch that enters the wetland from a golf course, JC28, and PC12 both of which currently receive runoff from a drainage culvert.

Soil Cores--Chemical characteristics.

Redox Potential, and pH. (Appendix B2). As expected, the wetlands that contained standing water had the most negative redox potentials. These include B3I, BBC24, SR24, and MGR36. There were portions of each of the other wetlands that were under standing water for the entire summer, and areas that had drained by the end of the season. This condition is reflected in the different redox potentials recorded from the different cores sampled in each wetland. Values of pH were acidic for all the wetlands, as would be expected for most soils in the King County climatic regime. The pH readings tended to be more alkaline in the inundated soils and more acidic in the soils that were drained for part of the year. This is especially obvious in ELS39 and LPS9 which are very acidic (pH less than 5.5), versus B3I and BBC24, which have an almost neutral pH (6.51 to 6.6).

N, P, organic carbon content, and soil metal content. (Appendix B3, B4). There is no apparent pattern to nitrogen, phosphorus and heavy metal content(s) for the different soil cores in the wetlands. They vary with the location of the cores sampled. These values will be used as the baseline contents. Organic carbon content (as indicated in the loss on ignition (LOI) value) of the soils is, as would be expected, related to the soil type. The peat soils contain the highest carbon content, and the sandy soils the least organic carbon. This value will be used to monitor siltation during the monitoring period as an independent assessment from changes seen in the particle size distribution.

Microtox. Data for the Microtox analysis are reported in Appendix B6. It appears that the more urban sites already display toxic properties. These include ELW1, FC1, JC28, and ELS61. There are no data for B3I and ELS39, but it would be expected that they too would have relatively toxic values. A few of the more rural sites display more toxic properties than would be expected considering their location. These include MGR36, BBC24, and PC12 (where there is a old dump located above the wetland). The rural sites RR5, LPS9, LCR93, HC13, and SR24 all showed high Microtox values, indicative of low toxicity, as would be expected.

Litter decomposition study. Appendix B7 reports the baseline chemical analyses for the litter samples. Healthy decomposition will result in loss of chemical content and dry weight over time.

REFERENCES

Beckman Instruments Inc. 1982. Microtox System Operating Manual. Beckman Instruments Inc.- Microbics Operations. Carlsbad, CA.

Boto, K.G. and W.H. Patrick Jr. 1979. Role of wetlands in the removal of suspended sediments. Pp. 479-489 in Geeson, P.E., J.R. Clark, and J.E. Clark (eds.), Wetland Functions and Values: The State of Our Understanding, American Water Resources Association, Minneapolis, MN.

Horner, R.R., F.B. Gutermuth, L.L. Conquest, and A.W. Johnson. 1988. Urban stormwater in Puget Trough wetlands. Pp. 723-746. in Proc. First Annual Puget Sound Research Meeting, Puget Sound Water Quality Authority, Seattle, WA.

Klute, A. (ed.) 1986. Methods of Soil Analysis, Part 1, Physical and Mineralogical Methods, 2nd Ed. American Society of Agronomy Inc., Madison, WI.

Parkinson, J.A., and S.E. Allen. 1975. A wet oxidation procedure suitable for the determination of nitrogen and mineral nutrients in biological material. Commun. Soil Sci. and Plan Ann. 6 Pp. 1-11.

Stockdale, E.C. 1986. The use of wetlands for stormwater management and nonpoint pollution control: A review of the literature. Washington Department of Ecology, Olympia, WA.

Technicon Industrial Systems. 1971. Autoanalyzer nitrate and nitrite in water and waste water. Tech. report # 100-70W. Technicon Instruments Corp. New York, NY.

Technicon Industrial Systems. 1971. Orthophosphate in sea water. Tech. report # 155-71W. Technicon Instruments Corp. New York, NY.

Technicon Industrial Systems. 1972. Low level ammonia in fresh and estuarine water. Tech. report # 108-71W Technicon Instruments Corp. New York, NY.

Ugolini, F.C. 1986. Soil Analysis Laboratory Manual. College of Forestry, University of Washington, Seattle, WA.

U.S. Environmental Protection Agency. 1983. Methods for chemical analysis of water and wastes, EPA-600/4-70-020. Environmental Monitoring Support Laboratory, Cincinnati, OH.

EFFECTS OF URBAN RUNOFF ON WETLAND ZOOLOGY, BASELINE INVESTIGATION

INTRODUCTION

The values and natural functions of wetlands have attracted increasing attention in the past decade (Goode et al. 1978, Greeson et al. 1979) Wetlands are now considered sensitive habitats of diverse functions that are protected at federal, state and local levels. Of the many functions wetlands exhibit, theirability to provide reting, feeding and breeding habitat for a wide diversity of animals is among the most noticeable and widely appreciated. Wetlands are disproportionately used by birds and mammals and are, therefore, the single most productive habitat for wildlife. Wetlands, because of their wildlife populations, have thus become an important component of open space values, enriching the quality of life in our ever urbanizing landscape. Nevertheless, many hectares of marshes, swamps and bogs are lost each year, since the biologic values of these wetlands are still not well documented.

Animals in wetlands are also significant in ecosystem dynamics. The distribution and abundance of invertebrates in running waters and lakes has long been recognized as an important tool in describing and assessing the general "health" of these aquatic ecosystems. Recent research focusing on aquatic invertebrates in wetlands, indicates the importance of insects in energy and nutrient transfer within these ecosystems (Rosenberg and Danks 1987).

Macroinvertebrates are primary consumers of a complex wetland food web. They also provide food for salmon and trout, the basis of several commercial and sport fisheries, and comprise the nutritional requirements of amphibians and birds. Aquatic insects, because of their protein content, are frequently the exclusive diet of young birds, without which survival would be impossible.

Studies of amphibians, birds and mammals similarly have shown the importance of these vertebrate classes to wetlands. Amphibian eggs and adults are eaten by a wide variety of wetland birds and furbearers. Additionally, the role that beavers and other wetland mammals play in shaping aquatic ecosystems has been well documented (Naiman 1988, Naiman et al. 1988).

OBJECTIVES

The invertebrate and wildlife studies of the Puget Sound Wetlands and Storm Water Runoff Research Program intend to document the impacts that urban stormwater inputs and urban development have on wetland communities and also the impact that wetlands and its

biota have on water quality. Specific research objectives for this program are to:

1. Document the distribution and abundance of macroinvertebrates, amphibians, birds, and mammals associated with distinct wetlands in Puget Sound. This task requires identifying all species present (richness, Tramer 1969), counting the numbers of each species (relative abundance, Bull 1981), integrating the total number of species with the actual numbers of each species (diversity, Tramer 1969, Poole 1975) and identifying the wetland class in which animals were observed.

2. Identify wetland features and underlying ecological processes that account for the animal populations observed by correlating animal distribution and abundance data with water quality and vegetation data.

3. Document constancy or change in animal species associated with these wetlands over time.

4. Determine threshold characteristics for members of various animal classes and trophic levels.

5. Develop and test scientific hypotheses that account for the observed animal distributions and abundances within wetlands and also account for differences in numbers in affected and unaffected wetlands.

The diversity of animal classes, each with unique life histories and adaptations to survive in wetland environments requires that class-, guild-, and even species-specific hypotheses be formulated for testing the relationship between affected and unaffected sites and the role of habitat change on animal distribution and abundances.

Since information on changing wetland communities is limited, this research project is also a pioneering study on the animal communities found in palustrine wetlands of this region. Combined, the achievement of these objectives will enable us to determine the effects of urbanization and storm water runoff on wetland animal populations and lead to an increased understanding of the stress that human activities place on these ecosystems.

MACROINVERTEBRATES

Hypotheses

Hypotheses regarding macroinvertebrates assume that aquatic invertebrates display a high diversity of habitat preferences; primarily respond to wetland hydrology and secondarily water quality; are uniquely adapted to detritivore, herbivore and predatory trophic levels in aquatic ecosystems; and, because

immatures and some adults are constantly in water, integrate the effects of pollution within their tissues. Therefore,

1. Macroinvertebrate species and their respective abundances over time should reflect changing land uses, environmental pollution, and general health of wetland ecosystems.

2. Human activities will impact wetland ecosystems by altering relationships between primary consumer, secondary consumers and carnivore trophic levels.

3. Population numbers of Plecoptera, Trichoptera and some Diptera, including certain chironomids, that may be sensitive to toxic stress or nutrient enrichment should decrease in numbers in treated as compared to unaffected wetlands.

4. Population numbers of sensitive indicator species will parallel changing water flows and water quality.

Methods

In September 1988 traps continually capturing and preserving emerging aquatic macroinvertebrates were installed in seasonally flooded emergent vegetation habitat of 14 wetlands. Traps were added to an additional five wetlands in May 1989. Three emergent traps, each with a 0.25 square meter basal area (Wisseman 1989), were clustered in each wetland. Starting in September 1988 traps were emptied of macroinvertebrates semi-monthly. Traps were not emptied from mid-November 1988 to March 1989 because of low or non-existent winter emergence.

Obligate aquatic invertebrates were rigorously classified and quantified utilizing taxonomic keys. Dipterans (true flies) were assigned to the aquatic group, since it is thought that the vast majority of taxa within this order have larval stages developing in water or in saturated soils.

Wetland-associated terrestrial insects were also identified and relative abundance data recorded. A taxa list was maintained to provide information on these mostly herbivorous insects.

Results

Arthropods were captured in traps as soon as they were installed in September but decreased significantly by mid-November. A cursory descriptive statistical analysis of the high numbers of emerging insects captured during the fall of 1988, combined with estimates of variability, indicate that trapping data is providing a good census of emerging aquatic insects (See Appendix C1). These capture data further suggest that robust statistical comparisons of macroinvertebrate emergence data are possible by combining replicates at each site. Nevertheless, increasing the number of replicates would be desirable.

Emergence most likely occurs from mid-March through November, with major hatching months in May and June followed by a second peak in September through early November, as determined by extrapolations from 1987 survey data, 1988 intensive November sampling, and from knowledge of invertebrate natural history phenomena (Figure 1). A summer slack period most likely occurs, and as expected, few invertebrates emerged in winter between mid-November and mid-March.

A total of approximately 8,200 adults was captured from mid-September through mid-November in 42 traps representing 14 palustrine wetlands. Total numbers of emerging adult aquatic insects ranged from 147 to 11,135 per square meter (Table 3).

Three out of five macroinvertebrate classes were captured, including 12 insect orders. Many of these, however, have strong terrestrial affinities and are classified as terrestrial forms. Only three insect orders, Plecoptera, Trichoptera and Diptera, with strong aquatic affinities were present. Roughly 80% of the insects captured represent emergence of adults whose larvae are found in aquatic or semi-aquatic habitats.

Total insect numbers varied widely in wetlands surveyed, ranging from a low of 147 at East Lake Washington 1 to a high of 11, 135 at East Lake Sammamish 61 (Table 3). Diptera dominated the fall emergence period, with the Chironomidae, the midge family, being most abundant. Other common dipteran families captured included the Psychodidae, Tipulidae, and Empididae.

Habitat affinities for the major macroinvertebrate taxa captured in emergence traps are presented in the 1988 research program report and are reported in Appendix C2. The broad habitat tolerance of some insect orders and families described in this Appendix C2 indicates that for some groups the more restrictive genus level needs to be investigated for meaningful insect habitat correlations.

Figure 1. Predicted Seasonal Macroinvertebrate Emergence Phenology

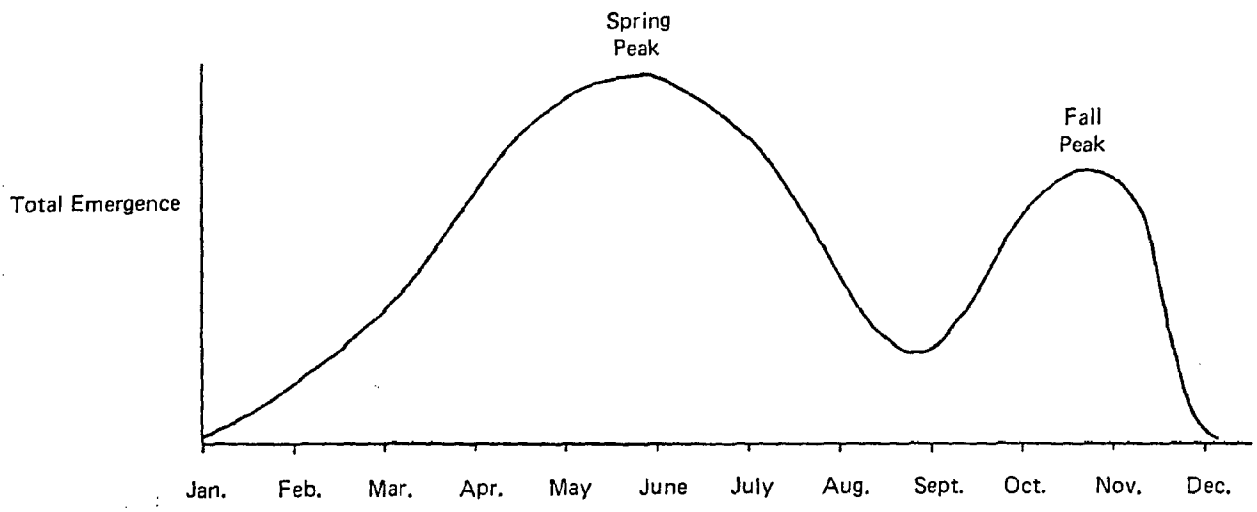

Table 3. Emerging Arthropod Densities (Numbers/M^2)
(14 September to 8 November 1988)

	PALUSTRINE WETLAND SITES						
TAXA	BV3I	BB24	CR93	FC1	GR36	HC13	JC28
Plecoptera	0	0	4	0	0	0	0
Trichoptera	1	1	36	3	0	1	1
Diptera							
Nematocera	132	365	1187	660	348	1085	396
Brachycera	153	21	551	12	57	171	47
TOTAL AQUATIC	287	388	1778	675	405	1285	444
Collembola	53	25	8	108	9	8	16
Psocoptera	41	152	128	0	31	24	21
Thysanoptera	8	5	16	11	3	0	0
Hemiptera	3	0	3	0	1	1	1
Homoptera							
Aphidae	52	7	43	185	27	8	0
Cercopidae	4	1	89	9	4	12	0
Cicadellidae	0	1	23	20	9	3	0
Neuroptera							
Hemerobiidae	8	0	1	1	0	1	0
Coleoptera	1	12	28	3	13	5	1
Lepidoptera	1	0	1	3	1	5	0
Hymenoptera							
Formicidae	4	0	1	0	0	0	0
Parasitoids	53	19	205	19	39	100	17
Arachnida	1	5	16	49	8	7	0
TOTAL TERRESTRIAL	231	228	563	408	145	175	57
GRAND TOTAL	517	616	2341	1083	551	1433	501

Table 3. continued...

	PALUSTRINE WETLAND SITES						
TAXA	PC12	PS9	RR5	LS39	LS61	SR24	LW1
Plecoptera	0	0	0	0	0	0	0
Trichoptera	1	3	8	5	3	1	0
Diptera							
Nematocera	332	963	4489	2392	10415	415	75
Brachycera	129	336	236	59	717	73	72
TOTAL AQUATIC	462	1301	4733	2456	11135	489	147
Collembola	135	49	79	800	63	11	73
Psocoptera	7	3	37	1	60	3	39
Thysanoptera	13	4	9	13	4	9	0
Hemiptera	0	3	1	1	3	0	0
Homoptera							
Aphidae	20	2023	23	55	12	4	4
Cercopidae	35	7	56	23	15	28	7
Cicadellidae	52	9	33	29	17	27	4
Neuroptera							
Hemerobiidae	0	0	0	0	1	0	0
Coleoptera	19	21	200	11	107	1	5
Lepidoptera	0	0	16	0	4	0	0
Hymenoptera							
Formicidae	0	0	5	0	0	0	0
Parasitoids	75	91	89	91	163	40	32
Arachnida	11	1	9	17	3	1	4
TOTAL TERRESTRIAL	365	2211	559	1041	451	124	168
GRAND TOTAL	827	3512	5292	3497	11585	613	315

AMPHIBIANS

Hypotheses

Most amphibians exhibit an aquatic phase that requires water for breeding, egg development and larval growth. The presence of water, its depth and changing quality may therefore reflect amphibian taxa who are adapted to breed and develop under specific conditions of these parameters.

Methods

The distribution and relative abundance of amphibians associated with the wetlands under study were determined from traps and egg mass counts. Pitfalls and Sherman traps were installed to capture small mammals (see Mammals section), also served to capture amphibians. In each wetland, coffee can pitfalls were buried above the high water mark in two transects of 10 pitfalls each. Traps were separated by 10 meters and transects marked. Plastic collars inside cans prohibited amphibians from crawling out, whereas a roofing shingle supported above the opening kept out rain and debris. Traps were checked every morning and evening for two weeks. Trapped amphibians were identified to species and released.

Spring egg surveys were used to determine amphibian breeding in wetlands. In April 1988 the palustrine open water (POW) adjacent to diverse shoreline habitat types (PSS, PEM and PFO) within each wetland was searched for egg masses. If eggs were found, transects measuring 5 meters long and 2 meters wide were established. Between April 3 and 21 in 1989, all wetlands were again surveyed and additional transects were established wherever egg masses occurred outside of previously established transects. The numbers of eggs within each egg mass was estimated and both length and width measurements were taken to the nearest centimeter. A maximum of five POW transects with as many different shoreline vegetation types as possible were established in each wetland.

The life form (i.e., the plant community and successional stage in which amphibians reproduce and feed) and the versatility rating (i.e., the sensitivity of an identified amphibian to habitat change) were taken from Brown (1985). Life history phenomena were taken from Nussbaum et al. (1983).

Results

Ten amphibian species were either captured in traps or identified as egg clusters (Table 4). Nine species were captured as adults utilizing the wetland edge and nearby terrestrial environments (Table 5) and only four species

Table 4. Common, Scientific, and Code names of Amphibians Identified in Surveys of 14 Wetlands

Common Name	Scientific Name	Code Name
Northwestern salamander	Ambystoma gracile	AMGR
Long-toed salamander	Ambystoma macrodactylum	AMMA
Pacific giant salamander	Dicamptodon ensatus	DIEN
Ensatina	Ensatina eschscholtzi	ENES
Western redback salamander	Plethodon vehiculum	PLVE
Roughskin newt	Taricha granulosa	TAGR
Western toad	Bufo boreas	BUBO
Pacific treefrog	Hyla regilla	HYRE
Red-legged frog	Rana aurora	RAAU
Cascade Frog	Rana cascadae	RAOA

Table 5. Fall 1988 Summary of Adult Amphibians Captured in Sherman and Pitfall Traps

SPP	B3I	BBC 24	ELS39 39	ELS 61	ELW 1	FC 1	HC 13	JC 28	LCR 93	LPS 9	MGR 36	PC 12	RR 5	SR 24
AMMA	3	1	0	2	0	4	0	0	0	3	1	0	0	0
AMGR	0	3	0	3	0	0	1	1	0	1	1	0	1	0
BUBO	0	0	0	0	0	0	0	0	0	0	0	0	5	0
DIEN	0	0	0	0	0	0	0	0	0	0	0	1	0	1
ENES	0	0	0	0	0	1	0	1	1	0	3	1	0	0
HYRE	0	0	0	0	0	0	0	0	2	1	0	0	0	0
PLVE	0	0	0	0	0	0	1	1	1	1	8	0	0	0
RAAU	0	2	1	3	0	0	4	0	10	2	4	2	3	0
TAGR	0	0	0	0	0	0	0	1	0	0	0	0	0	2
TOT NUM	3	6	1	8	0	5	6	4	14	8	17	4	9	3
TOT SPP	1	3	1	3	0	2	3	4	4	5	5	3	3	2

were observed to breed in the surveyed wetlands as determined from egg cluster searches (Table 6). This difference between adult and breeding populations is currently being investigated in the context of amphibian life history phenomena (Table 7), wetland hydrology, and water quality. Amphibian species and shifts in their use of a wetland may be indicative of changing water flows or water quality in wetlands.

The most abundant amphibians captured were the red-legged frog, long-toed salamander, Northwestern salamander and Western red-backed salamander. Total species and relative abundance numbers of captured amphibians, however, varied widely by wetland. Suprisingly, no amphibians were captured in East Lake Washington 1. Five species, the highest diversity in surveyed wetlands, were found at Lower Puget Sound 9 and Mid-Green River 36. Regardless, wetland amphibian data need to be carefully analyzed in the context of animal biology. To initiate this correlation, life history phenomena for amphibians captured by pit traps in autumn or identified as adults or eggs during spring egg surveys are presented in Table 7.

Table 6. Spring 1988 Summary of Amphibian Egg Cluster Counts Within the Wetlands Surveyed.

	NUMBER OF EGG CLUSTERS SPECIES				
WETLAND	Northwest Salam.	Red-legged Frog	Cascade Frog	Pacific Treefrog	Unknown Species
BBC24	18	1	1		
ELS61	5			2	
MGR36	1				
PC12		32			5
RR5	3			9	
SR24	14			12	
TOTAL	41	33	1	23	5

TABLE 7. Amphibian Life History Information

SPECIES	TIME IN MONTHS				
	AQUATIC PHASE	BREEDING (TIME (REQ.)	EMBRYONIC PERIOD	LARVAI METOMORPH. (EGG DEV.)	TOTAL REQ. PERIOD
N.W. SALAM.	YES	J->M 3	1-2	12	13
LONG-TOED SALAM.	YES	F->A 1-3	2-4	2-14	4->18
PAC. GIANT SALAM.	YES	SP.+FALL 6->7	<6	18->24	?
ENSATINA	NO	F->A 3	5-6	2.5	36
WEST. RED-BACK SALAM.	NO	N->M 6	4-5	?	?
ROUGHSKIN NEWT	YES	J->M 3	1	2	3
PACIFIC TREEFROG	YES	J->M 3	1	2	3
RED-LEGGED FROG	YES	F->M 2	1	3->4	4->5
BULLFROG	YES	M->A	<1/4	12	12
WESTERN TOAD	YES	1/4	?	?	?

BIRDS

Hypotheses

The bird hypotheses assume that bird distribution and abundance are functions of vegetation structure and diversity. Therefore, we may hypothesize that:

1. Bird species richness, diversity, and relative abundance are correlated with the number and diversity of vegetation community types (controlled for size).

2. Relatively undisturbed wetlands should exhibit a greater portion of native as opposed to naturalized species.

3. The proportion of bird species with life forms 2 and 3 (wetland species) should be the same in control and in treatment wetlands and should remain unaffected over time if water levels and quality remain the same.

4. The proportion (abundance and distribution) of species with low versatility ratings should be the same in control and treatment wetlands and should remain constant over time if water levels and quality remain the same.

5. The number and size of nesting territories within wetlands remain constant if wetland conditions remain unaltered.

There may be a high variability with a concomitantly unacceptably wide confidence interval for predictive level of significance in the bird data, therefore, some of these hypotheses may not be easily tested.

Methods

Relative abundance of birds was determined per unit sampling effort according to protocols outlined by Orians (Horner et. al. 1988 CZM Report) as adapted by Gracz (Appendix C3). Briefly, birds were identified by non-terretorial calls, territorial song, pecking and drumming, visual sightings and flyovers during 15 minute observations at permanent census stations. Different ornithologists surveyed the same sites on consecutive mornings.

Life forms, the plant community and successional stage in which identified birds reproduce and feed, and versatility ratings, describing the sensitivities of bird species to habitat change were taken from Brown(1985).

Results

A total of approximately 106 species of birds may be found in Puget Sound Wetlands (Table 8). Roughly half of this total number have been observed during each census. The data presented in Tables 9,10 and 11, however, indicate that the seasonal bird use of wetlands is complex and requires careful analysis. For some wetlands species are seasonally replaced although total species number remains relatively constant (e.g., SR24 and ELS39). For other wetlands there is a dramatic change in species number between seasons. For example, FC1 is used by 37 species in autumn but only five species in early spring. Spring breeding data will further increase species numbers within these wetlands.

Table 8. Code and Common Names for Birds That May Use Wetlands in the Puget Sound Area.

ACCI	ACCIPITER SPP.
AMBI	AMERICAN BITTERN
AMGO	AMERICAN GOLDFINCH
AGWT	AMERICAN GREEN-WINGED TEAL
AMRO	AMERICAN ROBIN
AMWI	AMERICAN WIDGEON
BAEA	BALD EAGLE
BASW	BARN SWALLOW
BEKI	BELTED KINGFISHER
BEWR	BEWICK'S WREN
BCCH	BLACK-CAPPED CHICKADEE
BHGR	BLACK-HEADED GROSBEAK
BGWA	BLACK-THROATED GRAY WARBLER
BWTE	BLUE-WINGED TEAL
BRCO	BRANDT'S CORMORANT
BRBL	BREWER'S BLACKBIRD
BRCR	BROWN CREEPER
BHCO	BROWN-HEADED COWBIRD
BUFF	BUFFLEHEAD
BUSH	BUSHTIT
CAGO	CANADA GOOSE
CEWA	CEDAR WAXAING
CBCH	CHESTNUT-BACKED CHICKADEE
CHIC	CHICKADEE SPP
COCR	COMMON CROW
COGO	COMMON GOLDENEYE
COME	COMMON MERGANDER
COYE	COMMON YELLOWTHROAT
COHA	COPOER'S HAWK
DEJU	DARK-EYED JUNCO
DIPP	DIPPER
DCCO	DOUBLE CRESTED CORMORANT
DOWO	DOWNY WOODPECKER
DUCK	DUCK SPP.
EVGR	EVENING GROSBEAK
FALC	FALCON
FINC	FINCH SPP.
FOSP	FOX SPARROW
GADW	GADWALL
GWGU	GLAUCUS-WINGED GULL
GCKI	GOLDEN-CROWNED KINGLET
GBHE	GREAT BLUE HERON
GRHE	GREEN-BACKED HERON
GULL	GULL SPP.
HAWO	HAIRY WOODPECKER
HAFL	HAMMOND'S FLYCATCHER
HAWK	HAWK
HETH	HERMIT THRUSH
HEWA	HERMIT WARBLER
HEGU	HERRING GULL
HOME	HOODED MERGANSER
HOFI	HOUSE FINCH
HOSP	HOUSE SPARROW
HUVI	HUTTON'S VIREO
KILL	KILLDEER
LESC	LESSER SCAUP
LISP	LINCOLN'S SPARROW
MALL	MALLARD
MAWR	MARSH WREN
MERL	MERLIN
MEGU	MEW GULL
MOBL	MOUNTAIN BLUEBIRD
NAWA	NASHVILLE WARBLER
NOFL	NORTHEN FLICKER
NOOR	NORTHERN ORIOLE
NORA	NORTHERN RAVEN
NOSH	NORTHERN SHRIKE
OSFL	OLIVE-SIDED FLYCATCHER
OCWA	ORANGE-CROWNED WARBLER
PECO	PELAGIC CORMORANT
PBGR	PIE-BILLED GREBE
PIWO	PILEATED WOODPECKER
PISI	PINE SISKIN
PINT	PINTAIL
PUFI	PURPLE FINCH
RAIL	RAIL SPP.
RECR	RED CROSSBILL
RBME	RED-BREASTED MERGANSER
RBSA	RED-BREASTED SAPSUCKER
RBNU	RED-BRESTED NUTHATCH
RTHA	RED-TAILED HAWK
RWBL	RED-WINGED BLACKBIRD
RBGU	RING-BILLED GULL
RNDU	RING-NECKED DUCK
RODO	ROCK DOVE
RCKI	RUBY-CROWNED KINGLET
RUDU	RUDDY DUCK
RUGR	RUFFED GROUSE
RUHU	RUFOUS HUMMINGBIRD
RSTO	RUFOUS-SIDED TOWHEE
SSHA	SHARP-SHINNED HAWK
SMFI	SMALL FINCH SPP.
SOSP	SONG SPARROW
SORA	SORA
SPAR	SPARROW SPP.
STAR	STARLING
STJA	STELLER'S JAY
SWTH	SWAINSON'S THRUSH
THRU	THRUSH SPP
TOWA	TOWNSEND'S WARBLER
TRSW	TREE SWALLOW
UNK	UNKNOWN
VATH	VARIED THRUSH
VIRA	VIRGINIA RAIL
WAVI	WARBLING VIREO
WEFL	WESTERN FLYCATCHER
WETA	WESTERN TANANGER
WWPE	WESTERN WOOD PEEWEE
WBNU	WHITE-BREASTED NUTHATCH
WCSP	WHITE-CROWNED SPARROW
WIFL	WILLOW FLYCATCHER
WIWR	WINTER WREN
WODU	WOOD DUCK
WOOD	WOODPECKER SPP.
YEWA	YELLOW WARBLER
YRWA	YELLOW-RUMPED WARBLER

Species found in most wetlands and most often in fall and early spring include common crow, golden-crowned kinglet, winter wren, American robin, hairy woodpecker and rufous-sided towhee. Least common at this time are spring breeders including Brewer's blackbird, gadwall, wood duck, Lincoln's sparrow and several swallow species. Significant sightings included those of raptors such as osprey in MGR 36 and kestrel in LCR93.

Table 9. The Number of Bird Species Identified in Autumn 1988 and Early Spring 1989.

WETLAND	AUTUMN	EARLY SPRING
BBC24	26	19
RR5	20	17
SR24	28	26
ELW1	25	11
MGR36	17	13
KE	--	12
TC13	--	10
AL3	--	8
HC13	15	11
PC12	20	20
ELS39	16	14
B3I	23	14
LCR93	18	14
LPS9	27	30
SC4	--	15
SC84	--	20
JC28	28	18
ELS61	25	8
FC1	37	5

Table 10. Relative Distribution and Abundance of 1988 Autumn-Censused Birds.

SPECIES	SITE													
	ELS61	LCR93	BBC24	HC13.	MGR36	RR5..	PC12.	SR24.	ELS39	ELW1.	JC28.	LPS9..	B3I..	FC1..
	RELATIVE ABUNDANCE													
CBCH	1	1	2	3	2	4	3	4	1	1	1	3	2	-
BRBL	-	1	-	-	-	-	-	-	-	-	-	-	-	-
GADW	1	-	-	-	-	-	-	-	-	-	-	-	-	-
KEST	-	1	-	-	-	-	-	-	-	-	-	-	-	-
SORA	-	1	1	-	-	-	-	-	-	-	-	-	-	-
VIRA	1	-	-	1	-	-	-	-	-	-	-	-	-	-
EVGR	1	3	4	4	4	4	-	1	-	-	4	1	-	-
UNK	2	-	1	-	-	-	1	-	-	-	1	-	-	-
PIWO	1	-	-	-	-	1	1	-	-	-	-	-	-	-
GBHE	-	-	-	-	1	-	-	-	-	-	-	-	-	-
LISP	-	-	-	-	-	-	-	1	-	-	-	-	-	-
MERL	-	-	-	-	-	-	-	1	-	-	-	-	-	-
NORA	-	-	-	-	-	-	-	1	-	-	-	-	-	-
RUGR	-	-	1	-	-	-	-	1	-	-	-	-	-	-
ACCI	-	-	-	-	-	-	-	-	-	-	1	-	-	-
BRCR	-	-	-	-	-	1	-	-	-	-	1	1	-	-
CEWA	-	-	-	-	-	-	-	-	-	-	3	-	-	-
GULL	-	-	-	-	-	-	-	-	-	1	-	-	-	-
HEGU	-	-	-	-	-	-	-	-	-	1	-	-	-	-
SMFI	-	-	-	-	-	-	-	-	-	-	-	1	-	-
DEJU	-	-	-	1	-	-	-	3	2	-	3	2	-	-
DOWO	-	-	1	-	-	1	1	-	1	1	-	1	-	-
FOSP	-	-	1	-	-	-	-	-	-	1	-	-	-	-
STJA	1	1	1	-	1	1	2	2	1	1	1	1	-	-
VATH	-	2	1	1	1	1	1	1	1	1	1	1	-	-
COCR	2	1	3	4	1	3	1	1	1	2	4	2	1	-
GCKI	4	4	4	4	4	4	4	4	4	4	4	4	2	3
WIWR	2	4	4	3	2	4	3	4	2	2	3	3	1	3
AMRO	1	2	1	-	-	1	1	1	2	3	1	4	2	2
RSTO	3	1	1	1	2	-	1	1	2	1	3	2	2	1
BEWR	-	-	-	-	-	-	-	2	1	-	-	1	-	1
HETH	1	1	-	-	-	-	1	1	-	-	1	-	-	1
BCCH	4	4	4	4	4	4	1	4	3	3	4	4	2	4
CHIC	-	1	1	-	-	1	-	-	-	-	1	-	1	-
PISI	4	3	4	-	-	2	4	1	2	3	2	4	2	3
RCKI	3	3	3	1	3	3	1	3	2	2	2	4	2	3
SOSP	4	3	3	1	3	3	4	3	3	2	3	4	3	4
BEKI	-	-	1	-	-	-	1	1	-	1	-	-	-	1
BUSH	-	-	-	3	3	3	3	3	4	1	-	3	-	3

HAWO	1	-	1	1	1	2	-	1	-	-	1	1	4	-
MAWR	1	1	1	1	1	-	1	2	-	1	1	1	1	3
NOFL	1	1	1	-	-	1	-	1	-	-	1	1	1	2
HOFI	4	-	-	-	-	-	-	1	-	-	-	-	3	2
RTHA	1	-	-	-	-	-	1	1	-	-	-	-	1	1
RWBL	3	3	2	-	-	-	-	-	-	-	1	1	1	2
HUVI	-	-	1	-	-	-	-	-	-	-	-	-	-	2
PINT	-	-	-	-	-	1	-	-	-	-	-	-	-	1
RBSA	-	-	-	-	-	1	-	-	-	-	-	-	-	1
SSHA	-	-	-	-	1	-	-	-	-	-	-	-	-	1
MALL	1	-	3	-	2	2	-	-	-	2	-	2	1	4
BUFF	1	-	-	-	-	-	-	-	-	-	-	-	-	3
COHA	-	-	-	-	-	-	-	-	-	-	-	-	-	1
DCCO	-	-	-	-	-	-	-	-	-	-	-	-	1	2
HOSP	-	-	-	-	-	-	-	-	-	-	-	-	2	-
PECO	-	-	-	-	-	-	-	-	-	-	-	-	-	1
RAIL	-	-	-	-	-	-	-	-	-	-	-	-	-	1
RBGU	-	-	-	-	-	-	-	-	-	-	-	-	-	1
RBME	-	-	-	-	-	-	-	-	-	-	-	-	-	2
STAR	-	-	-	-	-	-	-	-	-	-	1	1	3	4
HOME	-	-	1	-	-	-	-	-	-	-	-	-	-	2
AMCO	-	-	-	-	-	-	-	-	-	1	-	-	-	3
PUFI	-	-	-	-	-	-	-	-	-	1	1	-	3	-
AMGO	-	1	-	-	-	-	-	-	-	-	-	4	4	1
CAGO	-	-	-	-	-	-	-	-	-	1	-	-	-	1
FINC	-	-	-	-	-	-	-	-	-	2	2	1	-	4
GWGU	-	-	-	-	-	-	-	-	-	1	-	-	-	1
SWTH	-	-	-	-	-	-	-	-	-	-	1	-	-	1

Key:
- - = 0 sightings,
- * = No Data,
- 1 = 1 sighting,
- 2 = 2 sightings,
- 3 = 3-5 sightings,
- 4 = 6-10 sightings,
- 5 = >10 sightings

Table 11. Distribution and Abundance of Early Spring 1989-Censused Birds.

SPECIES	BBC24	BR5..	SR24..	ELW1..	MGR36	KLE..	TC13..	ALL3..	HC13..	PC12..	ELS39	B3IR..	LCR93	LPS9..	SC4..	SC84..	JC28..	ELS61	FC1..
	SITE																		
	RELATIVE ABUNDANCE																		
HOME	1	2	2	-	-	-	-	-	-	1	-	-	-	-	-	-	-	1	-
OCWA	2	-	2	1	-	-	-	1	2	1	-	-	-	-	-	-	-	1	-
HUVI	-	1	1	-	-	-	1	-	-	-	-	-	-	1	-	-	-	-	-
PIWO	1	2	1	-	-	-	-	-	-	1	1	-	-	-	-	-	1	-	-
WCSP	1	-	2	-	-	-	-	1	1	-	-	-	-	1	-	-	1	-	-
FINC	-	1	2	-	-	-	-	-	-	-	-	-	-	-	-	3	-	-	-
SMFI	4	1	4	-	-	-	1	1	-	-	1	-	3	-	2	1	1	-	-
WOOD	-	-	1	-	-	-	-	-	-	-	-	-	-	1	-	-	-	-	-
BTGW	-	-	1	-	-	-	-	-	-	-	-	-	-	-	-	-	-	-	-
FALC	1	-	-	-	-	-	-	-	-	-	-	-	-	-	-	-	-	-	-
GREB	-	-	1	-	-	-	-	-	-	-	-	-	-	-	-	-	-	-	-
HAWK	-	1	-	-	-	-	-	-	-	-	-	-	-	-	-	-	-	-	-
NORA	-	-	1	-	-	-	-	-	-	-	-	-	-	-	-	-	-	-	-
RNDU	-	-	4	-	-	-	-	-	-	-	-	-	-	-	-	-	-	-	-
SWAL	-	-	1	-	-	-	-	-	-	-	-	-	-	-	-	-	-	-	-
WCKI	-	-	1	-	-	-	-	-	-	-	-	-	-	-	-	-	-	-	-
WDDU	-	-	1	-	-	-	-	-	-	-	-	-	-	-	-	-	-	-	-
CBCH	3	1	3	3	2	2	-	-	-	1	-	1	3	-	-	1	1	1	-
GCKI	4	4	4	1	2	3	3	2	4	3	3	3	4	2	4	4	4	1	1
HAWO	2	2	1	1	-	-	1	-	-	1	-	1	-	1	1	1	-	1	-
DEJU	1	1	1	-	1	-	-	-	-	-	1	-	-	1	1	1	2	-	-
HETH	-	1	1	-	-	1	-	-	-	-	1	-	-	-	-	1	1	-	-
RBNU	1	-	-	1	-	-	-	-	1	-	-	-	-	-	-	-	1	-	-
RBSA	-	1	-	-	-	-	-	-	-	-	-	-	1	-	-	1	-	-	-
STJA	3	-	3	1	-	1	-	-	1	1	-	-	1	-	2	3	2	-	-
WIWR	3	4	3	1	3	2	2	3	1	3	-	-	3	1	2	2	3	-	1
YRWA	1	-	1	-	-	-	-	1	1	1	-	1	-	1	-	1	-	-	-
GBHE	1	-	-	-	1	-	-	-	-	1	-	1	-	1	-	-	-	-	-
RUGR	-	1	-	-	1	1	-	-	-	1	-	-	-	-	-	-	1	-	-
VATH	-	3	-	1	1	1	-	1	1	2	1	-	1	1	2	1	2	-	-
COSN	-	-	-	-	-	-	-	-	-	1	-	-	-	-	-	-	-	-	-
HUMM	-	-	-	-	1	-	-	-	-	-	-	-	-	-	-	-	-	-	-
OSPR	-	-	-	-	1	-	-	-	-	-	-	-	-	-	-	-	-	-	-
SSHA	-	-	-	-	-	1	-	-	-	-	-	-	-	-	-	-	-	-	-
SWTH	-	-	-	-	1	1	1	-	-	-	-	-	-	-	1	-	-	-	-
WETA	-	-	-	-	-	1	-	-	-	-	-	-	-	-	-	-	-	-	-
CHIC	-	-	-	1	-	-	1	-	-	-	1	-	-	1	-	1	-	-	-
AMGO	-	1	-	-	-	-	-	-	-	-	1	4	4	2	-	-	1	-	-
AMWI	-	-	-	-	-	-	-	-	-	-	-	-	-	-	2	-	-	-	-
BRBL	-	-	-	-	1	-	-	-	-	-	-	1	-	1	-	-	1	-	-
RECR	-	-	-	-	-	-	-	-	-	-	-	-	-	-	-	1	-	-	-
RUHU	-	-	-	-	-	-	-	-	-	-	-	1	-	-	1	1	-	-	-
TOWA	-	-	-	-	-	-	-	-	-	-	-	1	-	-	-	-	-	-	-

WAXW	-	-	-	-	-	-	-	-	-	-	-	-	-	-	3	-	-	-	-
WWPE	-	-	-	-	-	-	-	-	-	-	-	-	1	-	-	-	-	-	-
EVGR	2	-	-	-	-	-	-	-	-	-	-	-	-	1	-	2	4	-	-
PISI	-	-	4	-	-	1	-	-	1	-	2	-	-	4	4	1	2	-	-
HOFI	1	-	-	-	-	-	1	-	1	-	-	-	1	3	3	1	-	1	1
RSTO	1	2	-	1	1	-	1	-	-	1	2	1	-	1	3	3	2	1	1
AMRO	3	3	3	3	3	1	1	1	2	2	2	2	3	4	4	4	4	4	3
HOSP	-	-	-	-	-	-	-	-	-	-	-	-	2	-	*	*	*	*	*
PECO	-	-	-	-	-	-	-	-	-	-	-	-	-	1	*	*	*	*	*
RAIL	-	-	-	-	-	-	-	-	-	-	-	-	-	1	*	*	*	*	*
RBGU	-	-	-	-	-	-	-	-	-	-	-	-	-	1	*	*	*	*	*
RBME	-	-	-	-	-	-	-	-	-	-	-	-	-	2	*	*	*	*	*
STAR	-	-	-	-	-	-	-	-	-	-	1	1	3	4	*	*	*	*	*
HOME	-	-	1	-	-	-	-	-	-	-	-	-	-	2	*	*	*	*	*
AMCO	-	-	-	-	-	-	-	-	-	1	-	-	-	3	*	*	*	*	*
PUFI	-	-	-	-	-	-	-	-	-	1	1	-	3	-	*	*	*	*	*
CAGO	-	-	-	-	-	-	-	-	-	1	-	-	-	1	*	*	*	*	*
FINC	-	-	-	-	-	-	-	-	-	2	2	1	-	4	*	*	*	*	*
GWGU	-	-	-	-	-	-	-	-	-	1	-	-	-	1	*	*	*	*	*
SWTH	-	-	-	-	-	-	-	-	-	-	1	-	-	1	*	*	*	*	*

Key: - = 0 sightings,
* = No Data,
1 = 1 sighting,
2 = 2 sightings,
3 = 3-5 sightings,
4 = 6-10 sightings,
5 = >10 sightings

MAMMALS

Hypotheses

Small mammals, similar to macroinvertebrates, amphibians and birds, are indicators of the environmental health of wetlands. They also exhibit the ability to shape wetlands through their influence on soil, water and plants.

Methods

The initial methods used to census mammal populations are described in the proposed methodology paper provided in Appendix C4. Unless discussed in this report, procedures followed this original design. The most significant departure was the deletion of spring trapping. Without spring sampling there is no way to distinguish habitat sinks (habitats in which populations become seasonally extinct) from continuously occupied or "survival" habitats.

Initially four people were scheduled to sample 14 wetlands, travel time between sites however rendered this approach unworkable. Traps could not be checked frequently enough, resulting in excessive mammal deaths. Therefore, two people were added to the crew. If experienced animal trappers can not be found to operated these traps in the future, six people must be considered a minimum crew. Even with the added personnel, traps were not checked at time intervals short enough to avoid high trap mortality of insectivores.

Wood stakes instead of alluminum were used to mark trapping locations. Blue flagging was used to distinguish the trap sites from locations of other censuses. The trapping transects have been included on maps being prepared for each wetland. To minimize the adverse effects of soil water on pitfall traps, i.e., flooding and ejection of cans due to hydrostatic pressure, pitfall transects were located above spring high water level were possible. The Sherman traps were placed as near the land-water interface as practical.

Pitfall traps were operated for 14 days, as originally planned. Groups of 50 Sherman traps were alternately operated between wetlands for three consecutive days for a total of six days trapping per wetland. When only two wetlands were sampled, Sherman trapping was completed in 12 days. This period extended to 18 days when three wetlands were sampled.

Life form, the plant community and successional stage in which a captured small mammal reproduces and feeds, the versatility ratings, and the sensitivities of small mammals to habitat change were taken from Brown (1985).

Results

Seventeen mammalian species were captured in the pitfall and Sherman live traps (Table 12). The most abundant mammals overall were the two deermice, *Peromyscus maniculatus* and *P. oreas*, the two voles, *Microtus oregoni* and *M. townsendii*, and the three shrews, *Sorex monticolus*, *S. trowbridgii*, and *S. vagrans*. The most unusual capture was of the masked shrew, *Sorex cinereus*, a fairly rare species in this area.

Total captures indicated by trapping technique are given in Tables 13 and 14 and are standardized on catch per unit effort (captures per 100 trap nights) in Tables 15 and 16. Altogether 573 mammals were captured. As expected from biases of each trapping technique, there were consistent differences in the capture totals between pitfall and Sherman live trapping (cf Tables 13 and 15 with Tables 14 and 16). Pitfall trapping resulted in the capture of 14, and Sherman trapping in the capture of 18, mammal species. Pitfall traps captured a high proportion of insectivores and relatively few of the larger rodents, a pattern reversed for Sherman trapping.

The range of species diversity among wetlands was wide (Tables 13 and 14), varying from a low of just one species in East Lake Washington 1 to a high of 16 in Lower Cedar River 93. Some of these sites have already been severely altered by urbanization, and harbor minimal populations of native species, e.g., East Lake Washington 1 and Bellevue 3I.

Trap deaths for both techniques were high (Table 17). This is not a necessary outcome of these techniques, but rather reflects the inexperience of trappers and the excessively long intervals between trap checks. As explained in the study design, insectivores often do not survive beyond about four hours unless well provided with food and thermal protection. Although sufficient food and synthetic fiber should have been provided in each trap, some traps were not checked for 12-14 hours. This period was too long, and not only did insectivores die but even rodents died.

Table 12. Common Scientific Names of Mammals Identified in Surveys of 14 Wetlands and Code.

Common Name	Scientific Name	Code Name
Marsh shrew	Sorex bendirii	SOBE
Masked shrew	Sorex cinereus	SOCI
Montane shrew	Sorex monticolus	SOMO
Trowbridge's shrew	Sorex trowbridgii	SOTR
Vagrant shrew	Sorex vagrans	SOVA
Shrew-mole	Neurotrichus gibbsii	NEGI
Townsend's mole	Scapanus townsendii	SCTO
Deermouse	Peromyscus maniculatus	PEMA
Forest deermouse	Peromyscus oreas	PEOR
Southern red-backed vole	Clethrionomys gapperi	CLGA
Long-tailed vole	Microtus longicaudus	MILO
Creeping vole	Microtus oregoni	MIOR
Townsend's vole	Microtus townsendii	MITO
Black rat	Rattus rattus	RARA
Townsend's chipmunk	Tamias townsendii	TATO
Douglas squirrel	Tamiasciurus douglasii	TADO
Ermine	Mustela erminea	MUER

TABLE 13. Fall 1988 Pitfall Capture Summary

SPP	B3I	BBC24	ELS39	ELS61	ELW1	FC1	HC13	JC28	LCR93	LPS9	MGR36	PC12	RR5	SR24	TOT
SOBE	0	0	0	0	0	0	2	0	2	0	0	0	2	0	6
SOCI	0	0	0	0	0	0	0	0	1	0	0	0	0	0	1
SOMO	0	0	2	0	0	0	1	0	3	1	3	5	0	1	16
SOSP	0	0	0	0	0	0	0	0	0	0	0	1	0	0	1
SOTR	0	1	0	2	0	0	2	0	3	5	1	1	9	3	27
SOVA	1	0	5	0	0	0	1	0	0	3	1	3	0	1	15
NEG1	0	0	0	0	0	0	0	0	0	0	1	0	0	0	1
SCTO	0	0	1	0	0	0	0	0	0	0	0	0	0	0	1
PEMA	0	0	0	0	0	3	3	0	0	4	3	1	0	1	15
PEOR	0	0	0	0	0	0	0	0	0	0	0	0	0	0	0
PESP	0	0	1	1	0	0	0	1	5	0	7	0	1	0	16
CLGA	1	0	1	0	0	0	0	0	0	0	0	0	0	0	2
MILO	0	0	0	0	0	0	0	0	1	0	0	0	0	0	1
MIOR	0	1	7	2	0	8	0	0	1	0	5	2	3	0	29
MITO	0	0	7	0	0	0	0	0	0	2	0	1	0	0	10
RARA	0	0	0	0	0	0	0	0	0	0	0	0	0	0	0
RASP	0	0	0	0	0	0	0	0	0	0	0	0	0	0	0
TATO	0	0	0	0	0	0	0	0	0	0	0	0	0	0	0
TADO	0	0	0	0	0	0	0	0	0	0	0	0	0	0	0
MUER	0	0	0	0	0	0	0	0	0	0	0	0	0	0	0
TOT MAM	2	2	24	5	0	11	8	1	16	15	21	14	15	6	
TOT SPP	2	2	7	3	0	2	5	1	7	5	7	7	4	4	

TABLE 14. Fall 1988 Sherman Trap Capture Summary

SPP	B3I	BBC24	ELS39	ELS61	ELW1	FC1	HC13	JC28	LCR93	LPS9	MGR36	PC12	RR5	SR24	TOT
SOBE	0	0	0	0	0	0	0	0	0	0	0	0	0	0	0
SOCI	0	0	0	0	0	0	0	0	0	0	0	0	0	0	0
SOMO	0	0	2	0	0	0	0	0	0	1	0	3	1	0	7
SOSP	0	0	0	0	0	0	0	0	0	0	0	0	0	0	0
SOTR	0	1	0	1	0	0	0	2	0	2	3	1	0	0	10
SOVA	0	0	1	0	0	1	0	0	0	1	1	0	0	0	4
NEGI	0	0	0	0	0	0	0	0	0	0	0	0	0	0	0
SCTO	0	0	0	0	0	0	0	0	0	0	0	0	0	0	0
PEMA	2	7	0	0	0	23	23	21	14	48	10	0	9	5	162
PEOR	0	0	0	2	0	0	15	12	6	3	4	0	2	3	47
PESP	0	0	27	30	0	0	0	3	35	8	4	10	8	3	128
CLGA	0	0	0	0	0	0	0	0	1	0	0	0	0	0	1
MILO	0	0	0	0	0	0	0	0	0	1	0	0	0	0	1
MIOR	0	3	5	3	0	11	7	0	0	0	5	3	2	0	39
MITO	0	0	8	0	0	0	0	0	0	1	0	4	0	0	13
RARA	3	0	0	0	0	0	0	0	0	0	0	0	0	0	3
RASP	0	0	0	0	4	2	0	0	0	0	0	0	0	0	6
TATO	0	0	1	0	0	0	0	0	5	0	0	0	0	0	6
TADO	0	0	0	0	0	0	0	0	1	0	2	0	0	0	3
MUER	0	0	0	0	0	0	1	0	0	0	1	0	0	0	2
TOT MAM	5	11	44	33	4	36	46	38	62	66	30	21	22	11	
TOT SPP	2	3	6	4	1	4	4	4	6	8	8	5	5	3	

Table 15. Fall 1988 Standardized Pitfall Trap Capture Summary

SPP	B31	BBC 24	ELS 39	ELS 61	ELW 1	FC 1	HC 13	JC 28	LCR 93	LPS 9	MGR 36	PC 12	RR 5	SR 24	TOT
SOBE	0	0	0	0	0	0	0.7	0	0.7	0	0	0	0.7	0	2.1
SOCI	0	0	0	0	0	0	0	0	0.3	0	0	0	0	0	0.3
SOMO	0	0	0.7	0	0	0	0.4	0	1.1	0.4	1.1	1.8	0	0.4	5.7
SOSP	0	0	0	0	0	0	0	0	0	0	0	0.4	0	0	0.3
SOTR	0	0.4	0	0.7	0	0	0.7	0	1.1	1.8	0.4	0.4	3.2	1.1	9.6
SOVA	0.4	0	1.8	0	0	0	0.4	0	0	1.1	0.4	1.1	0	0.4	5.3
NEGI	0	0	0	0	0	0	0	0	0	0	0.4	0	0	0	0.3
SCTO	0	0	0.4	0	0	0	0	0	0	0	0	0	0	0	0.3
PEMA	0	0	0	0	0	1.1	1.1	0	0	1.4	1.1	0.4	0	0.4	5.3
PEOR	0	0	0	0	0	0	0	0	0	0	0	0	0	0	0
PESP	0	0	0.4	0.4	0	0	0.4	1.8	0	0	2.5	0	0.4	0	5.7
CLGA	0.4	0	0.4	0	0	0	0	0	0	0	0	0	0	0	0.7
MILO	0	0	0	0	0	0	0	0	0.4	0	0	0	0	0	0.3
MIOR	0	0.4	2.5	0.7	0	2.9	0	0	0.4	0	1.8	0.7	1.1	0	10.3
MITO	0	0	2.5	0	0	0	0	0	0	0.7	0	0.4	0	0	3.57
RARA	0	0	0	0	0	0	0	0	0	0	0	0	0	0	0
RASP	0	0	0	0	0	0	0	0	0	0	0	0	0	0	0
TATO	0	0	0	0	0	0	0	0	0	0	0	0	0	0	0
TADO	0	0	0	0	0	0	0	0	0	0	0	0	0	0	0
MEUR	0	0	0	0	0	0	0	0	0	0	0	0	0	0	0

NOTE: 300 total trap nights - the number with different species and recaptures = total adjusted trap nights (TAT). For each species, total captures/TAT = total captures/available trap night.

TABLE 16. Fall 1988 Sherman Trap Capture Summary Per 100 Trap Nights

SPP	B3I	BBC24	ELS39	ELS61	ELW1	FC1	HC13	JC28	LCR93	LPS9	MGR36	PC12	RR5	SR24	TOT
SOMO	0	0	0.8	0	0	0	0	0	0	0.5	0	1.1	0.4	0	2.8
SOTR	0	0.4	0	0.4	0	0	0	0.9	0	1.0	1.2	0.4	0	0	4.3
SOVA	0	0	0.4	0	0	0.4	0	0	0	0.5	0.4	0	0	0	1.7
PEMA	0.7	2.4	0	0	0	8.4	9.1	8.4	7.8	19.4	3.8	0	3.4	1.7	65.1
PEOR	0	0	0	0.8	0	0	6.1	5.0	3.5	1.5	1.5	0	0.8	1.0	20.2
PESP	0	0	10	10.3	0	0	0	1.3	17.4	3.9	1.5	3.5	3.0	1.0	51.9
CLGA	0	0	0	0	0	0	0	0	0.6	0	0	0	0	0	0.6
MILO	0	0	0	0	0	0	0	0	0	0.5	0	0	0	0	0.5
MIOR	0	1.1	2.0	1.1	0	4.2	3.0	0	0	0	1.9	1.1	0.8	0	15.2
MITO	0	0	3.2	0	0	0	0	0	0	0.5	0	1.4	0	0	5.1
RARA	1	0	0	0	0	0	0	0	0	0	0	0	0	0	1.0
RASP	0	0	0	0	1.4	0.8	0	0	0	0	0	0	0	0	2.2
TATO	0	0	0.4	0	0	0	0	0	2.9	0	0	0	0	0	3.3
TADO	0	0	0	0	0	0	0	0	0.6	0	0.8	0	0	0	1.4
MUER	0	0	0	0	0	0	0.4	0	0	0	0.4	0	0	0	0.8

NOTE: 300 total trap nights - the number with different species and recaptures = total adjusted trap nights (TAT). For each species, total captures/TAT = total captures/available trap night.

Table 17. Fall 1988 Capture Summary of Mammals Found Dead in Sherman and Pitfall Traps.

SPECIES	TRAP TYPE PITFALL	SHERMAN	TOTAL DEAD	TOTAL CAPTURED	PERCENT OF TOTAL
AMGR	1	0	1	11	9
PLVE	1	0	1	12	8
RAAU	1	0	1	31	3
SOBE	5	1	6	6	100
SOCI	1	0	1	1	100
SOMO	10	5	15	23	65
SOSP	1	0	1	1	100
SOTR	19	5	24	37	65
SOVA	10	2	12	19	63
PEMA	1	13	14	177	8
PEOR	0	4	4	47	9
PESP	1	6	7	144	5
MIOR	2	8	10	68	15
MITO	4	1	5	23	22
TOTALS	57	45	102	600	

PERCENT DEAD OF MAMMALS	99	OF	573	17
PERCENT DEAD INSECTIVORES	59	OF	87	68

With proper attention to minimizing the time intervals between trap checks, trapping techniques are working well in the monitoring of mammals. To improve survivability we recommend using hamburger instead of suet because insectivores accept it more readily. We also suggest that traplines be checked more frequently and inspected in spring to ensure that the pitfalls are indeed located above spring high water and again later in summer to see if lines are functional for upcoming autumn censuses.

Concerns center on the overall design of the survey, which excludes the spring sampling period. Without a spring sample, understanding of the temporal use of the sites is lost. For example, we are unable to establish if wetlands are inhabited in average years and unable to support populations in severe years. Given that funds are not available for spring sampling, we are analyzing the possibility of eliminating a number of wetland sites not providing valuable information from future trapping and in turn substituting spring surveys at more productive sites. Specifically, we suggest eliminating sites with low diversity or low abundance of mammals, as these sites are most likely inhabited just in fall, the season of peak numbers.

We are also analyzing the current pairings of wetlands for future comparisons. We are unsure that the chosen pairing criteria are relevant to small mammal analyses. For example, matching Harris Creek 13 with East Lake Washington 1 would prove unfortunate, as East Lake Washington 1 has no species diversity. Its mammal fauna consist exclusively of old-world rats. In this light, the vegetation and other features of wetlands need to be identified and accounted for in future work.

REFERENCES

General Ecology

Good, R.E., D.F. Whigham, and R.L. Simpson. 1978. Freshwater wetlands: Ecological processes and management potential. Academic Press, New York, NY.

Greeson, P.E., J.R. Clark, and J.E. Clark (eds). 1978. Wetland functions and values: The state of our understanding. Proceedings, National Symposium on Wetlands. American Water Resource Association, Minn. MN.

Macroinvertebrates

Batt, B. D. J., P. J. Caldwell, C. B. Davis, J. A. Kadlec, R. M. Kaminski, H. R. Murkin and A. G. van der Valk. 1983. The Delta Waterfowl Station-Ducks Unlimited (Canada) Marsh Ecology Research Program. Pp. 19-23 in Boyd, H. (ed.), First Western Hemisphere Waterfowl and Waterbird Symposium, May 25-28, 1982, Edmonton. Canadian Wildlife Service, Ottawa, ONT.

Rosenberg, D. M. and H. V. Danks. 1987. Aquatic Insects of Peatlands and Marshes in Canada. Memoirs of the Entomological Society of Canada. No. 140. 174 pp.

Good, R.E., D.F. Whigham and R.L. Simpson (eds.). 1978. Freshwater Wetlands. Ecological Processes and Management Potential. Academic Press, New York, NY. 378 Pp.

Greeson, P.E., J.R. Clark and J.E. Clark (eds.). 1979. Wetland Functions and Values: The State of our Understanding. American Water Resources Association, Minneapolis, MN. 674 pp.

Murkin, H.R. and B.D.J. Batt. 1987. The interactions of vertebrates and invertebrates in peatlands and marshes. Mem. Ent. Soc. Can. 140:15-30.

Wisseman, R.W.. 1988. Macroinvertebrate Study Plan: Urban stormwater and Puget Trough wetlands study. Resource Planning, King County, Washington.

Wisseman, R.W. (in prep.). A new insect emergence trap design for use in wetland research.

Wrubleski, D.A..1987. Chironomidae (Diptera) of peatlands and marshes in Canada. Mem. Ent. Soc. Can. 140: 141-161.

Amhibians

Brown, E.R. tech. ed.. 1985. Management of wildlife and fish habitats in Forests of Western Oregon and Washington. USDA Forest Service Pacific Northwest Region. Part 1 Chapter Narratives 332pp, Part 2 Appendices 302 pp.

Nussbaum, R.A., E.D. Brodie Jr., and R.M. Storm. 1983. Amphibians and reptiles of the Pacific Northwest. Univ. Idaho Press. 332 Pp.

Birds

Brown, E.R. tech. ed.. 1985. Management of wildlife and fish habitats in Forests of Western Oregon and Washington. USDA Forest Service Pacific Northwest Region. Part 1 Chapter Narratives 332pp, Part 2 Appendices 302 pp.

Bull, E.L. 1981. Indirect estimates of abundance of birds. Pages 76-80 in C.J. Ralph and J.M. Scott, eds.,Estimating numbers of terrestrial birds. Studies in Avian Biology No. Allen Press, Inc. , Lawrence, KA. 630pp.

Tramer, E.J. 1969. Bird species diversity; components to Shannon's formula. Ecology 50:927-929.

Mammals

Brown, E.R. tech. ed.. 1985. Management of wildlife and fish habitats in Forests of Western Oregon and Washington. USDA Forest Service Pacific Northwest Region. Part 1 Chapter Narratives 332pp, Part 2 Appendices 302 pp.

R.J. Naiman 1988. Animal influences on ecosystem dynamics. BioScience 38:750-752

R.J. Naiman, C.A. Johnston and J.C.Kelly 1988. Alteration of North American streams by beaver. BioScience 38:753-762.

APPENDICES

Appendix A1 Soils Methodology- Core Sampling

KING COUNTY WETLANDS SURVEY

SAMPLING OF SOILS OR NON-SOIL SUBSTRATES
(Full and Partial Coverage Sites)

1. Select 10 sampling locations according to the following general plan:

   2 in PFO (forested) zone
   2 in PSS (scrub-shrub) zone
   2 in PEM (emergent) zone
   2 in POW (open water) zone
   1 in major inlet channel (if any)
   1 in major outlet channel (if any)

   If zone(s), inlet, or outlet are not present, allocate samples to zones that are present in proportion to the approximate percentage of the total wetland area that they cover. Multiple locations in the same zone should be spaced as widely apart as feasible. **Use one of the aerial photographs to show these locations** (mark this photograph **Soil Samples**).

2. Take a soil core 15 cm in length at each of the 10 locations and perform field characterization of texture (see following procedure)

3. At full coverage sites only, take a second 15 cm soil core at five of the 10 locations according to the following general plan:

   1 in PFO (forested) zone
   1 in PSS (scrub-shrub) zone
   1 in PEM (emergent) zone
   1 in POW (open water) zone
   1 in major inlet channel (if any) or major outlet channel (if inlet absent)

   If zone(s), inlet, or outlet are not present, allocate samples as directed above. **Mark these locations on the aerial photograph.**

   Seal these samples to exclude air and return to the laboratory for analysis of particle-size distribution, organic content, and pH/redox potential.

4. At full coverage sites only, take a third 15 cm soil core at three of the 10 locations according to the following general plan:

   1 in PEM (emergent) zone in vicinity of major inlet (if any)
   1 in POW (open water) zone in vicinity of major inlet (if any)
   1 in major inlet channel (if any) or major outlet channel (if inlet absent)

   If zone(s), inlet, or outlet are not present, allocate samples as directed above. **Mark these locations on the aerial photograph.**

   Return these samples to the laboratory for analysis of nutrients, metals, and Microtox.

KING COUNTY WETLANDS SURVEY

FIELD CHARACTERIZATION OF SOILS OR NON-SOIL SUBSTRATES
(Full and Partial Coverage Sites)

I. General Classification:

Estimate proportions of boulders, cobbles, gravel, and finer grained soils (sand, silt, clay).

boulders	>12"
cobbles	3 to 12"
gravel	3" down to #4 sieve (4 openings per inch)

II. Soil Type Description:

Sand, silt, and clay components. Silt and clay make up the fines.

Silt is non-plastic
Clay is plastic

Typical soil types are:

Sandy silt
Sandy clay
Silty clay
etc.
(See attached summary sheet for the Unified Soil Classification System)

Use the visual soil identification system that follows.

Visual Identification of Soil Types

Sand, silt, and clay content of a soil can be determined in the field using several manual tests, all of which should be performed if time permits.

1. Shaking and jarring a wet pat of soil in the palm of your hands, then squeezing the pat between your fingers:

   Sand - Quick reaction; water appears quickly when shaken and disappears quickly when squeezed.

   Silt - Moderately quick reaction; water appears with vigorous jarring of hand and looks glossy.

   Clay - No reaction

2. Biting a bit of moist soil with front teeth.

   Sand - Feels gritty

3. Dry strength. Dry a moist pat in the sun, on your car hood, engine block, muffler, etc., then snap the pat.

   Sand - Little strength

   Silt - Harder to snap, but still not difficult

   Clay - Tough; difficult to snap

4. Feel of dry powered soil between fingers:

   Silt - Feels soapy or like flour.

   Sand - Feels gritty

5. Toughness. Moisten and mold pat to consistency of putty. Roll between hands or on hard surface to a thread 1/8 inch in diameter. Fold and re-roll repeatedly until it crumbles. Mold into lump.

   Sand - Cannot be rolled to 1/8" diameter.

   Silt - Thread not strong, final lump stiff, hard to roll out.

   Clay - Thread tough, final lump very stiff.

   Organic Clays - Weak and spongy feel when reaches plastic limit (after folding and re-rolling thread until it crumbles).

6. Tests for high organic content:

   a. Fresh wet samples have odor of decomposed material. Can be accentuated by heating.

   b. Dark color.

7. Smear test. Smear a moist sample between thumb and forefinger.

   Clay - Will stain fingertips

   Organic material - Will leave dark coating on fingertips, but easy to remove. Also watery, less sticky than clay.

UNIFIED SOIL CLASSIFICATION
INCLUDING IDENTIFICATION AND DESCRIPTION

			FIELD IDENTIFICATION PROCEDURES (Excluding particles larger than 3 inches and basing fractions on estimated weights)	GROUP SYMBOLS [a]	TYPICAL NAMES
COARSE GRAINED SOILS: More than half of material is larger than No. 200 sieve size [b] (The No. 200 sieve size is about the smallest particle visible to the naked eye)	GRAVELS: More than half of coarse fraction is larger than No. 4 sieve size (For visual classifications, the ¼" size may be used as equivalent to the No. 4 sieve size.)	GRAVELS WITH CLEAN FINES (Little or no fines)	Wide range in grain size and substantial amounts of all intermediate particle sizes	GW	Well graded gravels, gravel-sand mixtures, little or no fines
			Predominantly one size or a range of sizes with some intermediate sizes missing	GP	Poorly graded gravels, gravel-sand mixtures, little or no fines
		GRAVELS WITH FINES (Appreciable amount of fines)	Non-plastic fines (for identification procedures see ML below)	GM	Silty gravels, poorly graded gravel-sand-silt mixtures.
			Plastic fines (for identification procedures see CL below)	GC	Clayey gravels, poorly graded gravel-sand-clay mixtures.
	SANDS: More than half of coarse fraction is smaller than No. 4 sieve size	CLEAN SANDS (Little or no fines)	Wide range in grain sizes and substantial amounts of all intermediate particle sizes.	SW	Well graded sands, gravelly sands; little or no fines.
			Predominantly one size or a range of sizes with some intermediate sizes missing	SP	Poorly graded sands, gravelly sands; little or no fines
		SANDS WITH FINES (Appreciable amount of fines)	Non-plastic fines (for identification procedures see ML below)	SM	Silty sands, poorly graded sand-silt mixtures
			Plastic fines (for identification procedures see CL below).	SC	Clayey sands, poorly graded sand-clay mixtures
FINE GRAINED SOILS: More than half of material is smaller than No. 200 sieve size.	IDENTIFICATION PROCEDURES ON FRACTION SMALLER THAN No. 40 SIEVE SIZE				
	SILTS AND CLAYS: Liquid limit less than 50		DRY STRENGTH (CRUSHING CHARACTERISTICS): None to slight; DILATANCY (REACTION TO SHAKING): Quick to slow; TOUGHNESS (CONSISTENCY NEAR PLASTIC LIMIT): None	ML	Inorganic silts and very fine sands, rock flour, silty or clayey fine sands with slight plasticity
			Medium to high; None to very slow; Medium	CL	Inorganic clays of low to medium plasticity, gravelly clays, sandy clays, silty clays, lean clays
			Slight to medium; Slow; Slight	OL	Organic silts and organic silt-clays of low plasticity
	SILTS AND CLAYS: Liquid limit greater than 50		Slight to medium; Slow to none; Slight to medium	MH	Inorganic silts, micaceous or diatomaceous fine sandy or silty soils, elastic silts
			High to very high; None; High	CH	Inorganic clays of high plasticity, fat clays
			Medium to high; None to very slow; Slight to medium	OH	Organic clays of medium to high plasticity
HIGHLY ORGANIC SOILS			Readily identified by color, odor, spongy feel and frequently by fibrous texture	Pt	Peat and other highly organic soils

INFORMATION REQUIRED FOR DESCRIBING SOILS

Give typical name; indicate approximate percentages of sand and gravel, max size, angularity, surface condition, and hardness of the coarse grains; local or geologic name and other pertinent descriptive information; and symbol in parentheses.

For undisturbed soils add information on stratification, degree of compactness, cementation, moisture conditions and drainage characteristics.

EXAMPLE:-

Silty sand, gravelly, about 20% hard, angular gravel particles ½-in maximum size; rounded and subangular sand grains coarse to fine; about 15% non-plastic fines with low dry strength; well compacted and moist in place, alluvial sand; (SM)

Give typical name, indicate degree and character of plasticity, amount and maximum size of coarse grains, color in wet condition, odor if any, local or geologic name, and other pertinent descriptive information, and symbol in parentheses.

For undisturbed soils add information on structure, stratification, consistency in undisturbed and remolded states, moisture and drainage conditions.

EXAMPLE:-

Clayey silt, brown, slightly plastic, small percentage of fine sand, numerous vertical root holes; firm and dry in place; loess, (ML)

LABORATORY CLASSIFICATION CRITERIA

Use grain size curve in identifying the fractions as given under field identification

Determine percentages of gravel and sand from grain size curve. Depending on percentage of fines (fraction smaller than No. 200 sieve size) coarse grained soils are classified as follows:
- Less than 5% — GW, GP, SW, SP
- More than 12% — GM, GC, SM, SC
- 5% to 12% — Borderline cases requiring use of dual symbols

$C_u = \frac{D_{60}}{D_{10}}$ Greater than 4; $C_c = \frac{(D_{30})^2}{D_{10} \times D_{60}}$ Between one and 3	
Not meeting all gradation requirements for GW	
Atterberg limits below "A" line, or PI less than 4	Above "A" line with PI between 4 and 7 are borderline cases requiring use of dual symbols
Atterberg limits above "A" line with PI greater than 7	
$C_u = \frac{D_{60}}{D_{10}}$ Greater than 6; $C_c = \frac{(D_{30})^2}{D_{10} \times D_{60}}$ Between one and 3	
Not meeting all gradation requirements for SW	
Atterberg limits below "A" line or PI less than 4	Above "A" line with PI between 4 and 7 are borderline cases requiring use of dual symbols
Atterberg limits above "A" line with PI greater than 7	

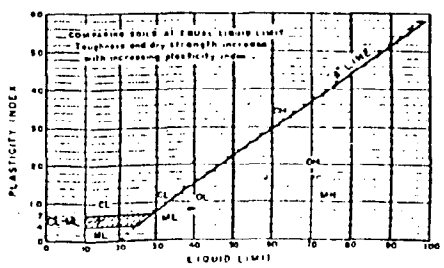

PLASTICITY CHART
FOR LABORATORY CLASSIFICATION OF FINE GRAINED SOILS

[a] Boundary classifications: Soils possessing characteristics of two groups are designated by combinations of group symbols. For example GW-GC, well graded gravel-sand mixture with clay binder.
[b] All sieve sizes on this chart are U.S. standard.

ADOPTED BY - CORPS OF ENGINEERS AND BUREAU OF RECLAMATION JANUARY 1952

Figure 7.—Unified soil classification chart. From drawing 103-D-347.

529741 O - 60 (In pocket)

Protocol for Soil Sampling for Microtox Analysis

1. Select 3 locations in the permanent flow channel or intermittently inundated zone within 20m of each inlet. If there is no inlet, select 3 locations in the open water or intermittently inundated zone.

2. Collect the top 10cm of soil at each location selected in step 1, using a soil cover (or trowel, if sample will not stay in corer). Composite all sample from a wetland and mix thoroughly. Use a clean bottle and teflon stirrer. Rinse stirrer with distilled water after use.

3. Put an aliquot of thoroughly mixed sample in a small vial. Label with wetland name and date.

4. Deliver as many vials as possible (up to 10-12) at a time to Metro for analysis. Deliver same day as collection.

Appendix A3 Soils Methodology- Redox Potential Sample Preparation

Redox Potential

To measure redox potential of soil, take a core with a 3 - 5 cm sampling tube. Push out core with large dowel. Mark the 10cm to 25cm depth portion of the core. Measure here. Insert the platinum electrode of the redox probe into the core sufficiently to allow contact with the sintered glass electrode on the body of the device. Allow the reading to stabilize. Record. Repeat at 9 other points on core. Average. Warning: roots export oxygen to the soil, increasing redox potential; do not make measurements in a clump of roots. Correct redox (EH) readings to a standard pH (6 or 7) using the conversion below.* If transporting to the lab, store cores in a jar into which the core fits snugly. Top off with water. Keep cool and out of the sun.

*Eh increases by 59mv for each unit of pH decrease. Redox may be converted to E_6 or E_7.

Appendix A4 Soils Methodology- Redox Potential

METHOD
OXIDATION REDUCTION POTENTIAL (REDOX)

EQUIPMENT REQUIRED

1. Platinum combination electrode.

2. pH electrode.

3. Two pH meters.

4. Nalgene trays

REAGENTS REQUIRED

1. Fisher 4M Potassium Chloride (KCl) solution saturated with AgCl. Fisher No. So-P-135.

CALIBRATION OF INSTRUMENTS

1. Calibrate the pH meter using two standards.

DETAILS OF ANALYTICAL PROCEDURE

1. Check that the electrolyte level in the platinum (Pt) electrode is 1/4 inch below the filling hole. Use the 4M KCl saturated with AgCl if needed.

2. Remove the red cot from the bottom of the electrode and rinse off the salts. Gently dry with a Kimwipe and be sure that the porous plug is gently blotted dry.

3. In order for the Pt electrode to function correctly, there must be a flow of filling solution through the porous plug located towards the bottom of the electrode. Lower the rubber sleeve until the filling hole is exposed. Place the electrode upright in an empty beaker. You should be able to see moisture in the porous plug area within several minutes after blotting dry. If you do not, see the troublshooting section below.

4. Once flow of electrolyte has been established, connect the electrode to the Altex 71 pH meter.

5. With the rubber sleeve below the filling hole, insert the electrode into the soil core until the porous plug is covered. Avoid areas that are thick with roots, and avoid rocks.

6. Press the CLEAR button, then the [rel mV] button on the meter.

7. When the reading , record the mV reading.

8. Repeat this 7 or 8 times in various areas of the soil core.

9. Take a pH reading in the core and record the value.

10. Gently remove as much soil from the electrode before taking readings on the next core. Rinsing the electrode should be avoided. If you must rinse, allow the electrode to equilibrate before recording the next reading.

11. When finished with the electrode, slide the rubber sleeve to cover the filling hole, rinse the electrode well, and place the red cot on the end until the porous plug is covered.

TROUBLESHOOTING THE ELECTRODE

1. If unable to establish flow of electrolyte through porous plug:

-hold electrode (cap up) at a 45 angle between thumb and forefinger on left hand, so that filling hole faces out and is directly opposite base of thumb.

-Insert the spout of the filling solution bottle into the filling hole, do not allow contact of the spout with the internal element.

-Make sure that electrode is supported by base of thumb, then firmly press spout into filling hole to make an airtight seal.

-While maintaining seal, squeeze filling bottle firmly so that electrode become pressurized. Liquid should appear at the plug in about 30 seconds. If flow does not occur in several minutes, see the rejuvenation section below.

2. If the liquid junction should become partially blocked:

-inspect reference cavity for crystallization.

-if crystals are evident:
a) remove filling solution by shaking it out through filling hole.
b) rinse cavity with DDW until all crystals are disolved.
c) refill cavity with electrolyte solution.

-if the above does not work:
a) soak electrode overnight in 0.1M KCl.
b) boil junction in 0.1M KCl for 10 minutes.
c) carefully sand or file the porous plug junction.

CLEANING

METHOD
OXIDATION REDUCTION POTENTIAL (REDOX)

SIMPLE CLEANING

1. Wash electrode surface with a good detergent, rise well.

2. Polish platinum wire with scouring powder (gently!), rinse well.

REFERENCE

Ugolini, F.C. 1986. Soils Analysis Laboratory Manual. College of Forestry University of Washington, Seattle, Wa..

pH

The measurement of soil pH is one of the easiest and most common soil chemical determinations. Soil pH determines, in part, the availability of most soil nutrients. The pH gives an indication of the amount of water passing through the soil profile. The soil acidity has an inverse relationship with base saturation. In spite of the importance of this measurement, there is no single universally accepted method for making it. The soil:water ratio recommended by various investigators varies from a saturated soil paste to a 1 to 10 soil suspension. Various solutions are recommended for suspending the soil. pH values are therefore only qualitative unless the method used as well as the value determined are specified. We propose to measure the pH of the samples using a glass electrode pH meter. We will do two determinations on each sample. One with the soil sample saturated and one with a 1 to 1 soil to solution ratio. In both cases, the soils will be mixed with 1 molar solution of potassium chloride. This breaks down the electric double layer surrounding the soil particles and equalizes the distribution of hydrogen ions throughout the solution.

Procedure

1 to 1 weight percent soil solutions and saturated soil paste will be prepared with 1 M potassium chloride. These will be allowed to stand for 1 hour. The pH meter will be calibrated with standard pH4 and 7 solutions. The electrodes will be inserted in the soil paste and the pH will be determined.

Ugolini 1986.

PARTICLE FRACTIONATION AND PARTICLE-SIZE ANALYSIS

****

Purpose-

This procedure involves the dispersion and subsequent fractionation of soil samples into proportions of distinct classes according to size. It is to be used following the removal of organic materials, amorphous iron (and if necessary, imogolite*), which tend to act as binding agents for soil particles. Particle-size analysis involves:

1. the use of sedimentation rates to determine silt and clay fractions.

2. dry sieving to determine sand fractions.

3. isolation of clay samples for use in x-ray analysis (optional).

* See the oxalic acid treatment procedure - this may be necessary for soils derived from volcanic ashes, especially those from the B horizon.

A. Preparing the samples.

1. Beginning with approximately 50 g of each sample, remove the organic material and iron oxides using the procedures outlined elsewhere in this manual.

2. After these removal procedures, carefully pour each sample from the centrifuge bottle into a large evaporating dish. With distilled water, rinse as much soil from the bottom and sides of the bottle as possible into the dish (the less water you can do this with, the shorter the drying time). Transfer the labels from the bottles to the dishes.

2. Place the evaporating dishes on top of the oven and allow the water to evaporate almost entirely. This may take a couple of days.

3. The samples will harden as they dry, and will need to be disaggregated. To do this, moisten with a slight amount of distilled water to soften the soil. Wait a few minutes and then gently scrape your sample off the sides and bottom of the dish, making a pile in the center of the dish.

   Remember three things:

   - Scrape off any clay that may form a ring around the inside of the bowl. A few squirts of distilled water will facilitate this.

   - Go easy on the amount of water used as you do not want

to wind up back at step two.

- Go easy on the scraping as you do not want to crush particles and thus throw off your analysis.

4. Allow your samples to dry on top of the oven one more time and then gently break up the pile so that it is well disaggregated and piled into the center of the bowl.

B. Preparing the Cylinders

1. The sedimentation cabinet holds eleven 1000 ml cylinders at a time, one of which is your standard. For each sample, weigh out 40 g of soil into a 400 ml plastic beaker, recording both the sample number and the exact weight of the soil used. Save what remains of each sample for dry weight analysis (See Section C).

2. Add 200 ml of distilled water to the beaker and place the mixture under the Braun Sonicator. Sonicate for 15 to 20 seconds to disaggregate all the particles and then pour off into one of your cylinders. Rinse the sides and the bottom of the beaker into the cylinder with a squirt bottle to get all of the remaining particles. Label the cylinder.

3. At this point you will need to prepare a solution of 10 % Calgon that you will add a portion of to each cylinder, including the standard cylinder. Calgon is a softening agent that will aid in the dispersion of the sample.

   To prepare the Calgon solution, either use commercial Calgon, or :

   Add 10 g of sodium hexametaphosphate $(NaPO_3)_s$

   to 1 liter dH_2O

   and adjust to a pH = 8.3 with sodium carbonate (Na_2CO_3)*

   * (See Black, et al, eds., 1965, Methods of Soils Analysis, p. 550 for more information on this procedure.)

4. Once you have prepared the Calgon solution, add 5 mls to each cylinder, including the standard cylinder, so that the final concentration after bringing the cylinders up to volume (1 liter) will be 0.5 %.

5. After adding 5 mls of 10 % Calgon, bring the cylinders up to volume, label, and place into the sedimentation cabinet. Insert the hydrometer into the standard cylinder, and lower it into the back right corner of the cabinet (looking from the control panel on the cabinet) near the thermometer. There is no clip for this cylinder.

7. Once all of the cylinders are in the sedimentation cabinet, bring the volume of water in the tank up so that it more than covers the pump intake (the vertical pipe in the center of the tank) and turn on the pump. DO NOT RUN THE PUMP DRY!!! If you are running the pump for an extended period of time, be sure to frequently check the water level, adding more when needed.

8. Allow your cylinders to equilibrate to 30°C overnight.

C. Dry Weight Analysis.

1. Place what remains of each sample into a weighed, labelled tin boat. Record the weight of each sample minus the weight of each boat.

2. Dry the samples overnight in an oven at 105°C. Reweigh and record the dry weight of each sample. The percent change in weight is used as a correction factor for your samples in the sedimentation cabinet.

D. Particle Size Analysis.

1. Record the hydrometer reading for the distilled water cylinder. The hydrometer scale is read at the top of the meniscus as the customary technique of viewing the stem from beneath the surface of the liquid is not possible with soil suspensions. You can determine the position of the meniscus and the reading on the scale by viewing the stem from an angle of 10 to 20 degrees above the plane of the liquid. Be consistent in your reading technique from sample to sample.

2. You will be taking hydrometer readings for each sample at 1, 3, 5, 10, 30, 90, 270, and 720 minute intervals. It is most convenient to do the 1, 3, and 5 minute readings one sample at a time. The rest of the readings can be done for all samples together. Begin by taking the long metal plunger and inserting it into the first cylinder. The object is to completely mix the sediment throughout the water column. To do this, move the plunger up and down with a simultaneous twisting at the bottom of the stroke (the plate at the bottom end of the rod is designed to get under any sediment on the bottom of the cylinder without crushing particles). Mix well with the plunger bringing sediment to the top of the cylinder while being careful not to splash any sample over the sides.

3. When the sediment is well-mixed, perform one final upward stroke, remove the plunger, giving it a quick, twisting

rinse at the top of the water column, and immediately star your timer.

4. To take your one minute reading, remove the hydrometer fro the distilled water cylinder, allow it to drip for a fe seconds and carefully lower it into the center of you sample cylinder (this is done slowly so as not to stir u the settling particles). You should make a guess as t your one minute reading and lower the hydrometer to tha estimated point on the hydrometer scale. This minimize endless bobbing of the bulb. If you mis-guess this point, you can always remove the hydrometer, mix again, and re-do.

5. At one minute, record your reading.

6. Slowly remove the hydrometer from the cylinder, hold it suspended just above your sample water level, rinse it with distilled water, and return it to the distilled water cylinder.

7. Give yourself about 30 seconds before each of your 3 and 5 minute readings to remove the hydrometer from the distilled water cylinder, and place it into your sample cylinder. Use your previous reading as a guide for depth of release.

8. The 10, 30, and 90 minute readings can be done with all the cylinders as follows: Set your clock at 1 hour and 40 minutes. Remix the mixture in the first cylinder. After removing the plunger, start the clock. You will take the ten minute reading for this cylinder in exactly ten minutes. In the meantime, wait thirty seconds and then begin stirring the next sample. Stir it for 30 seconds, remove the plunger, wait 30 seconds, stir the next sample for 30 seconds, remove the plunger, wait 30 seconds, stir the next sample for 30 seconds, and so on down the line. At 1 hour , 30 minutes and 30 seconds, remove the hydrometer from the distilled water cylinder, lower it into your first cylinder and take your reading at 1 hour 30 minutes. Remove the hydrometer, rinse, and at 1 hour, 29 minutes and 30 seconds, lower it into your second cylinder and take your reading at 1 hour 29 minutes. Continue taking readings on the minute for the remainder of your samples. Similarly, at 1 hour 10 minutes and 30 seconds, begin taking readings for the 30 minute interval. At 10 minutes 30 seconds, begin taking the 90 minute interval readings.

9. The final two readings can be done in a similar fashion. Due to the length of the intervals, it is wise to remix the cylinders in the morning, take the 270 minute reading in the afternoon and the 720 reading the following morning.

E. Drawing off clay fractions for x-ray analysis.

G. The Calculations.

Refer to Table 4 at the end of this section for the data record sheet and listing of the necessary calculations. The lab also has a program written for an HP programmable calculator that will perform these calculations.

The tables given below are ultimately derived from Stoke's law, where:

To determine the terminal velocity (Ω) of a particle settling in a liquid medium -

$$\Omega = \frac{2a^2}{9v} (D_s - D_l)$$

where D_s = specific gravity of the sphere (usually 2.65)

D_l = specific gravity of the liquid (usually 1.00)

v = viscosity of the liquid at the given temp.

a = sphere radius

Terminal velocity is attained when the drag force = acceleration due to gravity.

TABLE 1

Sedimentation times* for particles of 2, 5 and 20u diameter, settling through water for a depth of 10 cm.

Temperature	Settling time with indicated particle diameter					
°C	2 microns		5 microns		20 microns	
	hr.	min.	hr.	min.	hr.	min.
20	8 :	00	4 :	48	1 :	17
21	7 :	49	4 :	41	1 :	15
22	7 :	38	4 :	35	1 :	13
23	7 :	27	4 :	28	1 :	11
24	7 :	17	4 :	22	1 :	10
25	7 :	07	4 :	16	1 :	08
26	6 :	57	4 :	10	1 :	07
27	6 :	48	4 :	04	1 :	05
28	6 :	39	4 :	00	1 :	04
29	6 :	31	3 :	55	1 :	03
30	6 :	22	3 :	49	1 :	0[illegible]
31	6 :	14	3 :	44	1 :	00

*Values calculated from Stokes' equation, assuming a particle density of 2.60 g/cm^3. The figure for particle density is arbitrary and has been chosen to satisfy simultaneously the two definitions of the clay fraction, vis., particles having an effective diameter of 2 microns and a settling velocity of 10 cm. in 8 hours at 20°C. (International Society of Soil Science, 1929).

TABLE 2

Sedimentation Times

Particle Diameter (microns)	Centrifuge Speed (rpm)	Time (minutes on timer)
0.2	2700	41.2
2.0	750	5.3
5.0	300	5.3
20.0	0	4.3

TABLE 3

Values of O for determination of particle size from observed hydrometer readings (Day, 1956).

R	O	R	O	R	O
-5	50.4				
-4	50.1	11	46.4	26	42.2
-3	49.9	12	46.2	27	41.9
-2	49.6	13	45.9	28	41.6
-1	49.4	14	45.6	29	41.3
0	49.2	15	45.3	30	41.0
1	48.9	16	45.0	31	40.7
2	48.7	17	44.8	32	40.4
3	48.4	18	44.5	33	40.1
4	48.2	19	44.2	34	39.8
5	47.9	20	43.9	35	39.5
6	47.7	21	43.7	36	39.2
7	47.4	22	43.4	37	38.9
8	47.2	23	43.1	38	38.6
9	47.0	24	42.8	39	38.3
10	46.7	25	42.5	40	38.0

Particle Size Separation: Calculations

Sample	t (min)	R (g/l)	C (g/l)	%P	$\sqrt{t}$ (min)	T (°C)	i	C_o (gm)	PSu	$V = \sqrt{V/V30^oC}$	PS

Make a table like the one above for your calculations.

t = time of reading

R = hydrometer reading R_L = hydrometer reading of distilled H_2O

C = concentration of suspension $C = R - (R_L)$

P = % of size fraction $P = (C/C_o)$

C_o = corrected soil weight (oven dry basis)

T = temperature of suspension

i = sedimentation parameter (from table 3)

V = viscosity of suspension $V = \sqrt{V/V30^oC}$

PSu = particle size, uncorrected $PSu = i/\sqrt{t}$

PS = particle size, corrected PS = PSu * V

Make a graph of each sample, %P vs. PS (particle size)

Ugolini, F.C. 1986. Soils Analysis Laboratory Manual. College of Forestry University of Washington, Seattle, Wa.

29-2 TOTAL CARBON

29-2.1 Introduction

Analytical procedures used for determining total C in soils must quantify both inorganic and organic forms. In humid regions where extensive leaching of the soil profile has occurred, organic C will be the predominant form present. In arid or semiarid regions, carbonate minerals (e.g., calcite, dolomite) along with soluble carbonate salts will constitute a significant percentage of the total C.

Two basic approaches are used to quantify total C in soils, namely, dry combustion and wet combustion. In both instances, the CO_2 liberated from organic and inorganic C is determined through volumetric, titrimetric, gravimetric, or conductimetric techniques. An apparatus for performing total C analysis by dry combustion can be fabricated from conventional laboratory glassware and a medium-temperature (~1,000°C) resistance furnace. Dry combustion procedures using either high-temperature (~1,500°C) or induction furnaces are most commonly found in commercially available automated total C analyzers. The majority of dry combustion methods employ gravimetric determination of CO_2. Wet combustion methods for total C employ a strong oxidant ($K_2Cr_2O_7$) in an acid digestion mixture for quantitative oxidation of organic C and dissolution of carbonate minerals. A comparison of principles, advantages, and disadvantages of commonly used methods for total C determination is given in Table 29-1.

The developments in instrumental methods in recent years should be assessed before a procedure for determining total C in soils is chosen. The majority of instruments are automated versions of primarily dry combustion procedures. The relative advantages and disadvantages of manual and instrumental methods should be considered before initiating total C analysis. From a cost standpoint, manual procedures can be set up, in many cases, with apparatus already present in most laboratories; however, they are time-consuming and tedious and require use of careful analytical technique. In contrast, instruments are costly (ranging from $3,000 to >$20,000) but are capable of analyzing a large number of samples with minimal variability due to operator error.

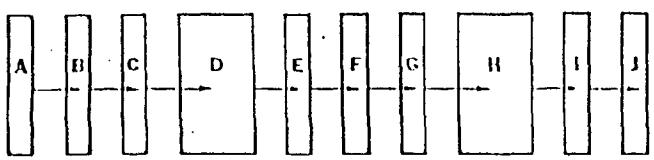

A = O_2 cylinder and regulator

B = O_2 purifying train—to remove impurities from O_2 stream

C = Flow meter

D = Resistance or induction furnace

E = Dust trap—to remove particulate matter

F = MnO_2 trap—to remove sulfur and halogen gases

G = Catalyst furnace—to oxidize CO to CO_2

H = Gas scrubber—to remove oxides of nitrogen and sulfur, halogens, and water vapor from gas stream

I = CO_2 absorption bulb—to absorb CO_2 for weighing

J = Bubbler trap—to seal the train from the atmosphere in case of back pressure caused by excessive oxygen demand during the combustion, and to indicate flow of exit gas

Fig. 29-1. Block diagram of a dry combustion train (Allison et al., 1965).

The methods presented for total C are essentially identical to those proposed by Allison et al. (1965) in the first edition of *Methods of Soil Analysis* (Black et al., 1965). Much of the text presented is used with only minor alterations to update the equipment available and the literature cited. A brief description has been added on the principles employed in various commercially available total C analyzers.

29-2.2 Total Carbon by Dry Combustion

29-2.2.1 INTRODUCTION

The dry combustion method is based on oxidation of organic C and thermal decomposition of carbonate minerals in a medium-temperature resistance furnace. The CO_2 liberated is commonly trapped in a suitable reagent and determined titrimetrically or gravimetrically. Volumetric and conductimetric procedures are used in some commercial instruments for CO_2 determination. Alternatively, the CO_2 released can be reduced to CH_4 using H_2 and a Ni catalyst and quantitated by a gas chromatograph fitted with a flame ionization detector (Geiger & Hardy, 1971). This approach has been incorporated into the Dohrman total C analyzer (section 29-2.2.5.2).

The following description of medium-temperature dry combustion is that presented by Allison et al. (1965).

29-2.2.2 PRINCIPLES

In the dry combustion procedures described here, the sample is burned in a stream of purified O_2, and the CO_2 in the effluent gas stream is absorbed by Ascarite or some other suitable absorbent and weighed. Other absorbable gases formed during combustion are removed from the O_2 stream before they reach the CO_2 absorption bulb. A typical combustion train is comprised of 10 basic elements as diagrammed in Fig. 29-1. The make-up of these elements recommended here are modifications (AOAC, 1975; Chemists U.S. Steel Corp., 1938; Salter, 1916; Winters & Smith, 1929) of those recommended by Fleming (1914) for the rapid determination of C in Fe and steel.

The O_2 supply (commercial compressed O_2) is first scrubbed by passage through a train consisting of concentrated H_2SO_4 to remove NH_3 and hydrocarbons, an absorbent such as soda lime to remove CO_2, and anhydrous $Mg(ClO_4)_2$ to remove water vapor. The rate of O_2 flow is controlled by a needle valve and is measured by a flow meter.

A furnace provides the heat necessary for combustion of the organic C to CO_2 and for decomposition of carbonates. In a resistance furnace, the sample is heated by radiation, conduction, and convection in a tube surrounded by heating elements made of high-resistance materials such as Nichrome (in medium-temperature models) or silicon carbide (in high temperature models). In an induction furnace, the source of energy is high-frequency electromagnetic radiation. Ferrous metals and certain other materials can be heated to high temperatures by electromagnetic induction if enough energy is present. Materials such as soil that do not heat by induction can be heated indirectly by radiation, conduction, and convection from susceptors (materials that do heat) in the induction field. The susceptor may take the form of Fe or Sn chips that are mixed with the sample to be burned, or a radiator (e.g., the Pt cage of Simons et al., 1955, or the quartz-enclosed C crucible) that will surround a crucible containing the sample to be burned. Recent results with the LECO automatic 70-sec C analyzer (LECO Corp., St. Joseph, Mich.) (Tabatabai & Bremner, 1970; Carr, 1973) indicate that reliable soil total C data are obtained using Fe, Sn, and Sn-coated Cu accelerators.

The type of furnace determines the packing of the combustion tube. With medium-temperature furnaces, CuO or another accelerator is mixed with the soil to aid in combustion of the organic matter and elemental C. With high-temperature furnaces, the organic and elemental C is generally oxidized to CO_2 by gaseous O_2 without special assistance. When medium-temperature furnaces are used, catalysts must be included in the combustion tube at the rear of the heated zone to ensure essentially complete oxidation of CO or other volatile C compounds. Platinized asbestos or CuO wire may be used as the catalyst. However, with any type of furnace, some CO may pass through. For this reason, a low-temperature (~250°C) catalyst furnace, with catalyst supplied by the manufacturer, should follow the main combustion tube to convert any CO to CO_2.

Medium-temperature combustion is not entirely satisfactory for soils containing alkaline-earth carbonates because these minerals release CO_2 slowly at 950°C (CO_2 may not be released completely in 30 min). High-temperature combustion, on the other hand, causes rapid and quantitative release of CO_2 from both Na_2CO_3 and alkaline-earth carbonates.

The gas stream leaving the furnace is freed of particulate matter by a dust trap in the exit end of the combustion tube. The removal of nitrogen oxides, sulfur oxides, and halogen gases can be effected in several ways. Activated MnO_2 appears satisfactory as a dry absorber for the oxides of N and S and the halogens (Robertson et al., 1958). To protect the catalysts in the catalyst furnace from being poisoned by these substances, a trap of activated MnO_2 must be inserted at the combustion tube outlet. Liquid absorbers for these interfering gases include H_2SO_4-CrO_3, Ag_2SO_4, and KI (see section 29-2.3.3.1 for one such combination). These are not recommended for insertion ahead of the catalyst furnace. Most of the water vapor formed during combustion is removed by a concentrated H_2SO_4 tower immediately following the catalyst furnace. The little vapor passing through is trapped by a tower of anhydrous $Mg(ClO_4)_2$ next in line. The CO_2 is finally absorbed in a suitable bulb containing Ascarite or other absorbent backed by anhydrous $Mg(ClO_4)_2$ to ensure that water vapor pressure is the same in exit gas as in entering gas.

29-2.2.3 METHOD USING MEDIUM-TEMPERATURE RESISTANCE FURNACE

29-2.2.3.1 Special Apparatus (Letters Refer to Units Shown in Fig. 29-1).

1. Oxygen cylinder and pressure regulator (A).
2. Oxygen purifying train consisting of concentrated H_2SO_4 for removal of NH_3 and hydrocarbons, Ascarite for removal of CO_2 and acid gases, and anhydrous $Mg(ClO_4)_2$ for removal of water vapor (B).
3. Flow indicator and needle valve for O_2 control (C).
4. Furnace unit (D)
   a. Resistance furnace equipped with temperature controller and indicator (Lindberg multiple-unit combustion-tube furnace or equivalent) for operation at 900 to 1,000°C.
   b. Sample inserter (LECO no. 501-062 or equivalent).
   c. Combustion tube, 2.5 cm diam. by 75 cm (zircon ceramic or equivalent).
5. Dust trap (LECO no. 501-010 or equivalent) inserted in the exit end of the combustion tube (E).
6. Sulfur trap filled with activated MnO_2 (LECO no. 503-033 or equivalent) (F).
7. Catalyst furnace and tube (LECO no. 507-010 or equivalent) (G).
8. Gas scrubber (H)
   a. Sulfuric acid tower to absorb most of the water vapor and to prolong the life of the anhydrous $Mg(ClO_4)_2$ trap that follows (especially desirable when combustions of organic materials are made).
   b. Water vapor trap filled with anhydrous $Mg(ClO_4)_2$ (LECO no. 598-157 or equivalent).
9. Carbon dioxide absorption tube, a Nesbitt, Fleming, or Turner bulb packed with an indicating CO_2 absorbent and anhydrous $Mg(ClO_4)_2$ (I). The bulb contains from bottom to top: (i) glass wool, (ii) 3-cm layer of 8- to 14-mesh absorbent (e.g., Ascarite), (iii) 2-cm layer of 14- to 20-mesh absorbent, (iv) 1-cm layer of anhydrous $Mg(ClO_4)_2$, and (v) glass wool (also described in section 29-2.3.3.1).
10. Bubbler trap to seal the train from the atmosphere and indicate flow of exit gas (J).
11. Alternative arrangements
    a. The O_2 purifying train (B) and the flow indicator (C) are available as a combined unit (LECO no. 516-000).
    b. The scrubber-absorption train described in section 29-2.3.3.1 (units F-K) can substitute for units H, I, and J (items 8-10).
    c. If the catalyst furnace G is omitted, alternative b will also substitute for F (item 6). The MnO_2 trap is required to protect the catalyst in catalyst furnace.

When C in soil extracts or other liquids is to be determined, the sample may be evaporated and dried, preferably under vacuum at 60°C in porcelain or Ni boats of 5- or 10-ml capacity. Liquids will slowly seep through the usual grade of ceramic boats. Porcelain boats are short lived, even at 950°C. Unglazed boats may be rendered leakproof by treating with a glazing mixture and firing in a laboratory furnace (Lindbeck & Young, 1964).

Combustion tubes eventually develop fine cracks in the hottest region and need to be replaced. Erratic results are one indication of a cracked combustion tube. After every 50 or 100 analyses, the tube should be tested for leaks under operating pressure by stoppering the exit and observing if O_2 passes the H_2SO_4 tower in the purifying train. Combustion tube life is prolonged if, during contemplated daily use, the furnace is kept on continuously.

A standard C source, such as analytical reagent or primary standard quality glucose or benzoic acid, should be run from time to time to check the apparatus. The organic standard should be diluted and covered with Alundum or Sinderite to prevent explosion.

Explosive combustion will blow stoppers, and even the boat, from the combustion tube. After an explosion, it is essential to burn off the C deposits from the cooler areas inside the tube before additional analyses are made.

A two-tube furnace is advantageous even though only one tube is used routinely. The second tube serves as a reserve in the event the other cracks during a series of analyses or when C deposits resulting from an explosion must be burned out.

The insert dust trap should be cleaned and refilled with glass wool after 40 or 50 determinations or more frequently if deposits appear in the exit tubing.

Platinized asbestos is preferable to CuO as a catalyst for oxidation of CO to CO_2. It is equally efficient, easier to pack in the tube, and has less tendency to become compact and to retard gas flow.

The MnO_2 used to remove SO_2 from the combustion products before they enter the catalyst furnace should be changed after about 50 determinations or before all the granules appear gray or agglomerated. Peterson (1962) pointed out that the accumulation of combustion reaction products on the MnO_2 changes its CO_2 absorption-desorption pattern so that longer flushing times must be used, as in the gasometric determination of C. Peterson recommended a specially prepared PbO_2 as a substitute for MnO_2. He demonstrated the efficiency of PbO_2 for SO_2 removal but presented no evidence concerning its capacity to absorb oxides of N or the halogens.

Air-dry samples are preferred to oven-dry samples, because lower values for total C may be obtained on some oven-dry samples than on air-dry samples.

A slight pressure in the combustion tube will be noticed when the stopper is removed after a determination. If this pressure becomes pronounced, it indicates increased resistance to gas flow in the S trap or in the water vapor trap. These traps should then be examined and repacked or replaced as necessary.

Temperature >1,000°C must be avoided. Heating elements will be subject to burnout, and fusion of CuO is likely to occur and cause slagging and tube rupture on cooling. Attention to this is especially important if a temperature controller is not used.

A supply of boats can be rendered C free by preliminary ignition in a muffle furnace at 850 to 900°C. These ignited boats should then be kept in dust-free storage until used.

29-2.2.4 METHOD USING HIGH-TEMPERATURE INDUCTION FURNACE

29-2.2.4.1 Special Apparatus (Letters refer to units shown in Fig. 29-1).

1. Oxygen cylinder and regulator (A).
2. Oxygen purifying train (B).
3. Flow meter and needle valve (C).
4. Furnace unit
   a. Induction (high-frequency) furnace (LECO no. 521-100 or equivalent) for operation at 1,400 to 1,600°C.
   b. Combustion tube (LECO no. 550-122 or equivalent).
   c. Crucible (LECO no. 528-031 or 528-035) with cover or quartz-enclosed graphite crucible (LECO no. 550-182) plus zircon insert (LECO no. 501-045).
5. Dust trap for induction furnace, external (LECO no. 501-010 or equivalent).
6. Sulfur trap filled with activated MnO_2 (LECO no. 503-033 or equivalent).
7. Catalyst furnace and tube (G).
8. Gas scrubber (H).
9. Carbon dioxide absorption tube (I).
10. Bubble trap (J).
11. Alternative arrangements
    a. The O_2 purifying train (B) and the flow indicator (C) are available as a combined unit (LECO no. 516-000).
    b. The LECO 521-100 induction furnace actually is a complex unit that combines the furnace (D), dust trap (E), S trap (F), and catalyst furnace (G) (items 4-5 above), in a single unit.
    c. Various combinations of the 10 basic elements that comprise the train (Fig. 29-1) are available under various trade names such as LECO and Coleman. The output of the furnaces (induction and catalyst) can be put through a water vapor trap (H, a simple U-tube filled with Anhydrone) into a CO_2 absorption tube (I). No exact combination of units is prescribed here since many suitable combinations are possible.
12. Analytical balance (Mettler H31AR or equivalent).

29-2.2.4.2 Reagents.

1. Reagents 1, 2, 3, 7, 8, and 9 described in section 29-2.2.3.2.
2. Tin metal accelerator (LECO no. 501-076 or equivalent).
3. Iron chip accelerator, C free (LECO no. 501-077 or equivalent).
4. Tin-coated Cu accelerator (LECO no. 501-263 or equivalent).
5. Scoop for adding 1 g of accelerators (LECO no. 503-032 or equivalent).

29-2.2.4.3 Procedure Using Quartz-Enclosed Carbon Crucible. Free the insert zircon crucibles of C by ignition for 30 to 60 min at 850 to 900°C in an ordinary muffle furnace. Handle the crucibles subsequently with forceps. Condition each quartz-enclosed C crucible (QECC) by firing it in the furance for 5 min with an O_2 flow of 500 ml/min, following the manufacturer's instructions for furnace operation. Handle the QECC with forceps from this point forward.

Weigh the CO_2 absorption bulb on the analytical balance, insert the bulb in the train, and open the stopcocks. Set the O_2 flow at the rate of 1.5 liters/min. Place an empty zircon crucible in a QECC, and insert the pair in the induction furnace. Fire the furnace, following the manufacturer's instructions, for 5 min. At the end of the combustion period, remove the crucibles, turn off the O_2 flow, and then close off and remove the CO_2 absorption bulb. Weigh the CO_2 absorption bulb (section 29-2.2.3.4). Repeat this process until a blank reproducible to ± 0.2 mg is obtained.

Transfer a 0.5000 g sample of soil that passes through a 100- or 140-mesh sieve to an ignited insert crucible. Place the crucible containing the soil in a QECC, and insert the pair in the induction furnace. Follow the procedure used for the blanks. After correction for the blank, the increase in weight of the CO_2 absorption bulb should be due to CO_2 released from the soil sample. Flush the train (without the CO_2 absorption bulb) with O_2 gas for about 1 min between successive runs. The calculation is as follows:

$$\text{Total C, \%} = \frac{[\text{g } CO_2 \text{ (sample)}] - [\text{g } CO_2 \text{ (blank)}]}{\text{g water-free soil}} \times 0.2727 \times 100. \qquad [2]$$

29-2.2.4.4 Procedure Using Iron, Tin, and Tin-coated Copper Accelerators. Condition the train as described in the second paragraph of section 29-2.2.4.3, but omit use of the insert zircon crucible. Alternatively, ignite two or more blanks (crucible containing 1 scoop each of Fe chip, Sn, and Sn-coated Cu accelerators) until a blank reproducible to ± 0.2 mg is obtained.

Transfer a 0.5000-g sample of soil that passes through a 100- or 140-mesh sieve to a crucible. Add 1 scoop of Sn metal accelerator, 1 scoop of Fe chip accelerator, and 1 scoop of Sn-coated Cu accelerator, and cover the crucible. Insert the covered crucible in the induction furnace. Set the O_2 flow at a rate of 1.5 liters/min. Fire the furnace according to the manufacturer's instructions. At the end of the combustion period, remove the crucible, turn off the flow of O_2, and close off, remove, and weigh the CO_2 absorption bulb (section 29-2.2.3.4). The increase in weight of the CO_2 absorption bulb, after correction for the blank, should be due to CO_2 released from the soil sample. Flush the train (without the CO_2 absorption bulb) with O_2 for about 1 min between successive runs. Determine the blank for the crucible and accelerators using the same procedure.

Calculation:

$$\text{Total C, \%} = \frac{[\text{g } CO_2 \text{ (sample)}] - [\text{g } CO_2 \text{ (blank)}]}{\text{g water-free soil}} \times 0.2727 \times 100. \qquad [3]$$

29-2.2.4.5 Comments. Comments under section 29-2.2.3.4 on weighing of absorption bulbs and on sample grinding are fully applicable to this procedure. Other comments under section 29-2.2.3.4 are also applicable.

Under optimum conditions, the two procedures yield comparable results. Adequately high temperature (>1,650°C) can be developed with the proper additions of Sn and Fe, but the temperature maximum is held only briefly. The temperature rises steadily until the susceptors melt and fuse with the sample, and thereafter, it falls rapidly. Occasionally this temperature rise and fall occurs before thermal decomposition of C is complete, perhaps because of inadequate contact between the sample and the susceptor material. For most soils, this does not appear to be a major problem since Fe, Sn, and Sn-coated Cu accelerators (~1 g of each/sample) have been found to yield accurate total C values in a range of calcareous and noncalcareous soils and standard carbonate minerals (Tabatabai & Bremner, 1970). More recently, vanadium pentoxide has been used as a catalyst in an automated induction furnace apparatus operated at ≅1,000°C (LECO no. 737-700). A limited amount of data has been collected on soils using this instrument.

When the QECC is used as the susceptor, somewhat lower temperatures are developed, because the softening temperature of quartz (1,679°C) must not be exceeded; however, the temperature can be maintained for as long as is necessary to fully decompose all carbonates.

When the preliminary steps of igniting both the insert zircon crucibles and the QECC are followed, blank values approaching zero are ordinarily obtained once the CO_2 absorption bulb is equilibrated with the atmosphere and the O_2 steam.

If the organic matter content of the soil is high, the sample weight should be reduced appropriately. Organic materials can be analyzed by this technique, but sample weights must be reduced to 20 or 30 mg if explosions are to be avoided. Alternatively, the organic material in amounts up to 60 mg can be mixed and covered with Alundum or Sinderite as described in section 29-2.2.3.3.

The ignited soil in the zircon crucible appears as a sintered, bricklike mass. It can be removed readily, and the crucible can be reused.

The gravimetric determination of CO_2 following combustion with the LECO induction furnace was found by Carr (1973) to yield total C levels comparable with manual wet and dry combustion methods. In addition to

gravimetry, an automated CO_2 analyzer (LECO no. 761-100) based on thermal conductivity measurements of the effluent gases is applicable to soil analysis (Tabatabai & Bremner, 1970). This system allows a single operator to analyze total C in 15 to 20 samples/hour. Alternatively, a titrimetric method was developed to allow estimation of both total C and ^{14}C in soil samples amended with ^{14}C compounds (Cheng & Farrow, 1976). A bypass valve and a 125-ml gas washing bottle (e.g., Corning 31760) are used in place of the CO_2 absorption bulb of Fig. 29-1. All CO_2 released by combustion is trapped in 50 ml of 0.5*N* NaOH followed by removal of 1 aliquot for liquid scintillation counting to quantify $^{14}CO_2$ and a second aliquot for titration with standard HCl to determine total C. The total C data obtained were comparable with a wet combustion procedure.

29-2.2.5 OTHER INSTRUMENTAL METHODS

The following section describes three additional commercial instruments for determining total C in soils. They were chosen to illustrate the principles involved in instrumenting total C analysis. The inclusion of the following three instruments does not imply that they are superior or inferior to others currently being marketed. As with all instruments, various evaluation procedures should be used to determine if the instrument selected is compatible with the types of samples requiring analysis.

29-2.2.5.1 Perkin-Elmer 240. The Perkin-Elmer 240 (Perkin-Elmer Corp., Instrument Division, Norwalk, Conn.) simultaneously measures C, H, and N using the principles employed in the traditional Pregl and Dumas procedures. A sample contained in a Pt boat is oxidized with O_2 at ~1,000°C for 2 min in a combustion tube in the absence of carrier gas (He) flow. After combustion, He flow is initiated and the CO_2, H_2O, and N_2 gases produced by combustion are passed over CuO to convert CO to CO_2 and Ag mesh (silver vanadate on Ag wool) to remove S and halogen gases. The gases then flow into a tube maintained at 650°C and packed with Cu granules between end plugs of Ag wool, where quantitative reduction of N oxides to N_2 occurs. The gases are brought to constant pressure and volume in a gas mixing chamber and then allowed to expand into the analyzer portion of the instrument. The analyzer consists of three thermal conductivity (TC) detectors connected in series and separated by two traps. The sequence of TC detectors and traps enabling quantification of H, C, and N is as follows:

1) TC detector 1 (output equals total gas composition).
2) Magnesium perchlorate trap to remove H_2O.
3) TC detector 2 (decrease in output from detector 1 is proportional to H content).
4) Soda asbestos plus $Mg(ClO_4)_2$ trap to remove CO_2.
5) TC detector 3 (decrease in output from detector 2 is proportional to C content).
6) The remaining gases in the sample are N_2.

All operations within the instrument are automatic.

29-2.2.5.2 Dohrman DC-50. The Dohrman DC-50 (Dohrman, Santa Clara, Calif.) is designed to analyze liquid samples, although an alternative sample injection boat system allows analysis of suspensions (i.e., finely ground soil suspended in water or another suitable dispersant). The system involves injecting a 30-μl sample into a sample boat containing CoO, followed by vaporization of H_2O at 90°C and combustion of organic and inorganic C at 850°C. Purified He is used as the carrier gas to sweep the CO_2 formed through a column (350°C) containing alumina coated with Ni where H_2 is introduced to reduce the CO_2 to CH_4. After removal of H_2O by a $CaSO_4$ column, the CH_4 is determined by a flame ionization detector. The peak area is integrated automatically, and the results (milligrams of C per liter) are displayed on a digital read-out. The instrument has a linear response range of approximately 1 to 2,000 mg of C/liter. The instrument was designed for injection of liquid samples and thus should be more amenable to total C analysis of soil extracts than intact soils. Ultrapure He, air, and H_2 must be employed with the instrument. Various aspects of this instrument have been described by Takahashi et al. (1972).

29-2.2.5.3 Coleman Model 33. Coleman Model 33 (Coleman Instruments Division, Perkin-Elmer Corp., Oak Brook, Ill.) is an automated version of the medium temperature resistance furnace method described in section 29-2.2.3 and determines both C and H. Compressed O_2 is purified by $Mg(ClO_4)_2$ and COSORB traps before entry into a combustion tube. A sample placed in the combustion tube is heated to ~1,000°C by a resistance furnace, and the gases formed are passed over CuO, platinized asbestos, silver vanadate, and Ag gauze. Scrubbers are used to remove interfering gases (e.g., N). Two traps in series containing COSORB and $Mg(ClO_4)_2$ retain CO_2 and H_2O, respectively. Both C and H traps are removed from the instrument and weighed manually.

29-2.3 Total Carbon by Wet Combustion

29-2.3.1 INTRODUCTION

The wet combustion analysis of soils by chromic acid digestion has long been a standard method for determining total C, giving results in good agreement with dry combustion. The main advantages for wet combustion are that the cost of apparatus is but a small fraction of the cost for dry combustion equipment and that the parts needed to assemble the apparatus are standard equipment in most laboratories. The chief disadvantage of the earlier wet combustion procedures (e.g., Heck, 1929) is that they use macro equipment, which is tedious to assemble and disassemble, and which occupies considerable bench space more or less permanently. Wet combustion is also used when the special manometric Van Slyke-Neil apparatus (Van Slyke & Folch, 1940; Bremner, 1949) is employed to estimate total C in soils.

The wet combustion method of Allison (1960), described here, embodies important refinements from published procedures, such as a simple

Klute et. al. 1986.

Appendix A7 Soils Methodology- Metals Analysis

B. Soils Analysis

1. The following procedures shall be performed by the methods indicated:

	Method
Digestion	Nitric acid & hydrogen peroxide
Dry Weight	Gravimetric
Cd	GFAA
Zn	FAA
Cu	GFAA
Pb	GFAA
Arsenic (As)	GFAA

2. Results shall be reported in mg metal/kg dry soil and mg metal/kg wet soil.

3. Detection limits shall be: (1) Cd -- 0.005; (2) Zn -- 0.2; (3) Cu -- 0.1; Pb -- 0.05; and As -- 0.05 mg/wet kg.

4. Spiking levels shall be: (1) Cd -- 5 ppb; (2) Zn -- 500 ppb; (3) Cu --250 ppb; (4) Pb 20 ppb; and (5) As 40 ppb.

Appendix A8a- Litter Content Analysis

Li_2SO_4 MODIFIED KJELDAHL DIGEST PROCEDURE

PURPOSE: To digest solid samples to a liquid form for analysis on the AutoAnalyser for Total Kjeldahl Nitrogen and total phosphorous, and analysis on the Atomic Absorption Spectrophotometer for Cations and Metals.

REAGENTS: Digestion Mixture

To 350 ml of 30% H_2O_2 (cold) add 0.42 g Se powder and 14 g of $Li_2SO_4.H_2O$.

Place container (preferably an Erlenmeyer flask) in an ice bath and slowly!! add 400 ml of conc. H_2SO_4 with liberal swirling.

Try to keep the mixture cold by adding the acid in small amts.

If the mixture gets too hot some of the hydrogen peroxide will be lost.

When all of the acid has been added, further chill the mixture in a refrigerator before use.

note! To make larger amounts multiply reagent amounts accordingly.

PROCEDURE:

1) PRELIMINARIES:

a) The digest tubes should be clean and dry. Otherwise the sample will cling to the wall of the tube.

b) The solid sample should be ground to pass through a 20 mesh sieve on a Wiley mill if the sample is foliage or contains no rocks. The sample should be sieved through a 2mm sieve if it is soil. (the pulverizer may also be used in the case of soil).

2) Weigh out about 0.5 g of each sample into the digest tubes and add one boiling bead to each tube. (this wt. is very flexible and can vary from 0.05 g to 1.2 g if necessary, but 0.5 g is the preferable amount due to acid volume used)

3) Add 7.5 mls of the chilled digest mixture. (use the repipet in M16 refrigerator to perform this addition)

4) If you have sufficient time let the samples predigest for several hours before heating. Place the rack of tubes into the block heater. overnight if possible

Parkinson J. A., S. E. Allen. 1975. "A wet oxidation procedure suitable for the determination of nitrogen and mineral nutrients in biological material. Comm. Soil Sci. & Plant Ann. 6 (1) Pp. 1-11.

#41 Whatman 15.0 cm filter paper. Decant about 15 mls of the sample into the filter and catch the filtrate in the labeled 60 ml poly bottle. Cap shake and disgard. Decant the rest into the filter, collect the filtrate, and cap and store. (normally one can arrange to filter 5 at a time)

12) When you finish using the digesters, remove the fume hoods and wash with tap water in the sink. Store them in a corner of the room to dry. Place the blue hose from the scrubber into the bucket after rinsing the inside of the hose end with about 300 ml of distilled water. Let the water drip into the bucket provided.

COPPER

Method 220.1 (Atomic Absorption, direct aspiration)

STORET NO. Total 01042
Dissolved 01040
Suspended 01041

Optimum Concentration Range: 0.2–5 mg/1 using a wavelength of 324.7 nm
Sensitivity: 0.1 mg/1
Detection Limit: 0.02 mg/1

Preparation of Standard Solution

1. Stock Solution: Carefully weigh 1.00 g of electrolyte copper (analytical reagent grade). Dissolve in 5 ml redistilled HNO_3 and make up to 1 liter with deionized distilled water. Final concentration is 1 mg Cu per ml (1000 mg/1).
2. Prepare dilutions of the stock solution to be used as calibration standards at the time of analysis. The calibration standards should be prepared using the same type of acid and at the same concentration as will result in the sample to be analyzed either directly or after processing.

Sample Preservation

1. For sample handling and preservation, see part 4.1 of the Atomic Absorption Methods section of this manual.

Sample Preparation

1. The procedures for preparation of the sample as given in parts 4.1.1 thru 4.1.4 of the Atomic Absorption Methods section of this manual have been found to be satisfactory.

Instrumental Parameters (General)

1. Copper hollow cathode lamp
2. Wavelength: 324.7 nm
3. Fuel: Acetylene
4. Oxidant: Air
5. Type of flame: Oxidizing

Analysis Procedure

1. For analysis procedure and calculation, see "Direct Aspiration", part 9.1 of the Atomic Absorption Methods section of this manual.

Approved for NPDES
Issued 1971
Editorial revision 1974 and 1978

from: Methods for Chemical Analysis of Water; Wastes 1979. Environmental Monitoring and Support Laboratory. U.S. EPA Cincinnati, Ohio

Notes

1. For levels of copper below 50 ug/1, either the Special Extraction Procedure, given in part 9.2 of the Atomic Absorption Methods section or the furnace technique, Method 220.2, is recommended.
2. Numerous absorption lines are available for the determination of copper. By selecting a suitable absorption wavelength, copper samples may be analyzed over a very wide range of concentration. The following lines may be used:
   327.4 nm Relative Sensitivity 2
   216.5 nm Relative Sensitivity 7
   222.5 nm Relative Sensitivity 20
3. Data to be entered into STORET must be reported as ug/1.
4. The 2,9-dimethyl-1, 10-phenanthroline colorimetric method may also be used (Standard Methods, 14th Edition, p. 196).

Precision and Accuracy

1. An interlaboratory study on trace metal analyses by atomic absorption was conducted by the Quality Assurance and Laboratory Evaluation Branch of EMSL. Six synthetic concentrates containing varying levels of aluminum, cadmium, chromium, copper, iron, manganese, lead and zinc were added to natural water samples. The statistical results for copper were as follows:

Number of Labs	True Values ug/liter	Mean Value ug/liter	Standard Deviation ug/liter	Accuracy as % Bias
91	302	305	56	0.9
92	332	324	56	-2.4
86	60	64	23	7.0
84	75	76	22	1.3
66	7.5	9.7	6.1	29.7
66	12.0	13.9	9.7	15.5

NITRATE AND NITRITE IN WATER AND WASTE WATER

(RANGE: 0–2.0 ppm N)

GENERAL DESCRIPTION

This automated procedure for the determination of nitrate and nitrite utilizes the procedure whereby nitrate is reduced to nitrite by a copper-cadmium reductor column.[1,2] The nitrite ion then reacts with sulfanilamide under acidic conditions to form a diazo compound. This compound then couples with N-1-naphthylethylenediamine dihydrochloride to form a reddish-purple azo dye.

The surface waters normally encountered in surveillance studies, the concentration of oxidizing or reducing agents and potentially interfering metal ions are well below the limits causing interferences. When present in sufficient concentration, metal ions may produce a positive error, i.e., divalent mercury and divalent copper may form colored complex ions having absoprtion bands in the region of color measurement.[3]

PERFORMANCE AT 40 SAMPLES PER HOUR

USING AQUEOUS STANDARDS:

Sensitivity (0.72) absorbance units	2.0	ppm N
Coefficient of variation (95% confidence level at 1.0 ppm N)	0.62%	
Detection limit	0.04	ppm N

REAGENT

AMMONIUM CHLORIDE REAGENT

(Technicon No. T01-5064)

Ammonium chloride(NH_4Cl)	20 ~~10~~ g	g
Alkaline water, q.s.	1000	ml
Brij-35 (Technicon No. T21-0110)	0.5	

Preparation:

Dissolve 10 g of ammonium chloride in alkaline water and dilute to one liter. Add 0.5 ml of Brij-35 per liter.

NOTE: Alkaline water is prepared by adding just enough ammonium hydroxide to distilled water to attain a pH of 8.5.

COLOR REAGENT

(Technicon Nos. T11-5065, T01-5017)

Sulfanilamide ($C_6H_8N_2O_2S$)	20	g
Concentrated phosphoric acid (H_3PO_4)	200	ml
N-1-naphthylethylenediamine dihydrochloride ($C_{12}H_{14}N_2 \cdot 2HCl$)	1.0	g
Distilled water, q.s.	2000	ml
Brij-35 (Technicon No. T21-0110)	1.0	ml

Preparation:

To approximately 1500 ml of distilled water add 200 ml concentrated phosphoric acid and 20 g of sulfanilamide. Dissolve completely. (Heat if necessary.) Add 1.0 g of N-1-naphthylethylenediamine dihydrochloride, and dissolve. Dilute to two liters. Add 1.0 ml Brij-35 (Tech. No. T21-0110). Store in a cold, dark place. STABILITY: one month.

CADMIUM, POWDER (Technicon No. T11-5063)

Use coarse cadmium powder (99% pure). Rinse the filings once or twice with a little clean diethyl ether or 1 *N* HCl followed by distilled water to remove grease and dirt. Allow the metal to air-dry and store in a well-stoppered bottle.

Preparation of Reductor Column:

The reductor column tube is a U-shaped fourteen inch length of 2.0 mm I.D. glass tubing (Technicon No. 189-0000). Before filling the column, prepare the cadmium in the following manner:

Wash about 8 g of previously cleaned cadmium with one liter of 2% W/V copper sulfate ($CuSO_4 \cdot 5H_2O$) (Technicon No. T01-5068) for no longer than 2 minutes. Wash thoroughly with distilled water to remove all of the colloidal copper which is present. A minimum of ten washings is usually required.

Fill the reductor column tube with water to prevent the entrapment of air bubbles during the filling operation. Transfer the prepared cadmium granules to the column using a Pasteur pipette. When the entire column is filled with granules, insert glass wool in both ends of the tube. Sleeve both ends with 0.090 I.D. Tygon tubing and insert an N5 nipple on one side of the tube. Connect the other side of the tube directly to the A_2 debubbler by means of the 0.090 I.D. Tygon.

---

[1] Armstrong, F.A.J., Sterns, C.R. and Strickland, J.D.H., 1967 Deep-Sea Res. 14, pp. 381-389. The measurement of upwelling and subsequent biological processes by means of the Technicon AutoAnalyzer and associated equipment.

[2] Grasshoff, K., Technicon International Congress, June, 1969.

[3] Federal Water Pollution Control Administration Methods for Chemical Analysis of Water and Wastes, November, 1969.

Start pumping reagents. When the pump tubes are filled with reagents and all air is removed from transmission lines, attach the distal end of the tube to the injection fitting (116-0489) using a short length of 0.34 I.D. Polyethylene tubing.

Preparing the column in this fashion keeps it effective for hundreds of samples.

STANDARDS

STOCK STANDARDS: 100 ppm N

Potassium nitrate, KNO_3 (Technicon No. T13-5074)	0.722 g
Distilled water, q.s.	1000 ml

Preparation:

Dissolve 0.72 g of potassium nitrate in distilled water and dilute to one liter. Store in a glass bottle with a few drops of chloroform as a preservative. Prepare standards ranging from 0.04 to 2.0 ppm N in serial dilutions. Working standards should be prepared daily.

OPERATING NOTES

1. Samples should be processed and analyzed as soon as possible. If this cannot be done immediately, they should be refrigerated at 5–10 °C or preserved with 1 drop of chloroform per 100 ml sample.

2. Where particulate matter is present, the solution must be filtered prior to the determination. This can be accomplished by having the Technicon Continuous Filter as an integral part of the system if the sample is such that Whatman #4 or equivalent filter paper is satisfactory. (See Continuous Filter Manual, No. CFO–1.)

3. It is of the utmost importance that the water used in preparing reagents and standards be completely free of contamination. Reagents should be stored in glass bottles and contact with air should be avoided.

4. In order to determine nitrate levels, the nitrite alone must be subtracted from the total (nitrate and nitrite). The nitrite value can be determined by eliminating the reductor column from the manifold, or by using the Technicon Methodology for Nitrite (102–70W).

5. The reductor column must be clean and have good flow characteristics for the system to operate satisfactorily. Colloidal copper is the primary contaminant.

6. For initial activation of the reductor column about 100 ml of distilled water containing 1 ml of the stock standard should be pumped through the column.

7. The efficiency of the reductor column has been found to be 99%.

8. Before running this method, switch the range on the Digital Printer to 200, set the Mode Switch into Normal position, set the Sampling Rate Switch to 40 and place the Decimal Switch in the 0.00 position. (See Instruction Manual TA1-027S-00.)

9. Alternate ranges may be obtained by utilization of the Standard Calibration Dial on the Colorimeter.

INDUSTRIAL METHOD No. 108-71W/PRELIMINARY DATE RELEASED: MARCH 1972

LOW-LEVEL AMMONIA IN FRESH AND ESTUARINE WATER
(RANGE: 0-0.5 mg/l)

GENERAL DESCRIPTION

The automated procedure for the determination of ammonia in water utilizes the Berthelot Reaction, in which the formation of a blue colored compound believed to be closely related to indophenol occurs when the solution of an ammonium salt is added to sodium phenoxide, followed by the addition of sodium hypochlorite. A solution of potassium sodium tartrate and sodium citrate is added to the sample stream to eliminate the precipitation of the hydroxides of calcium and magnesium. [1,2,3,4,5,6]

PERFORMANCE AT 60 SAMPLES PER HOUR

USING AQUEOUS STANDARDS

Sensitivity at 0.5 mg/l	0.43 absorbance units
Coefficient of Variation at 0.4 mg/l	0.32%
Detection Limit	0.01 mg/l

REAGENTS

COMPLEXING REAGENT

Potassium Sodium Tartrate ($KNaC_4H_6O_6 \cdot 4H_2O$)	33	g	66
Sodium Citrate ($HOC(COONa)(CH_2COONa)_2 \cdot 2H_2O$)	24	g	48
Distilled Water, q.s.	1000	ml	
Brij-35* (Technicon No. T21-0110)	(0.5	ml	– 20 drops)

Preparation:

Dissolve 33 g potassium sodium tartrate and 24 g sodium citrate in 950 ml of distilled water. Adjust the pH of this solution to 5.0 with concentrated sulfuric acid. Dilute to one liter with distilled water. Add 0.5 ml of Brij-35.

1 Van Slyke, D.D. and Hillen, A.J., BioChem., 102, 499, (1933).

2 Kallman, S., Presentation at Div. I Meeting of ASTM Committee E-3, April, 1967, San Diego, California.

3 Bolleter, W.T., Bushman, C.J. and Tidwell, P.W., Anal. Chem., 33, 592 (1961).

4 Tellow, J.A. and Wilson, A.L., Analyst, 89, 453 (1964).

5 Tarugi, A. and Lenci F., Boll. Chim. Farm., 51, 1-17 (1912).

6 FWPCA Methods of Chem. Anal. of Water & Waste Water, Nov., 1969, p. 137.

* Registered trademark of Atlas Chemical Industries, Inc.

ALKALINE PHENOL

Phenol (C_6H_5OH)	83	g
Sodium Hydroxide (NaOH) 20% w/v	180	ml
Distilled Water, q.s.	1000	ml

400g NaOH in approx 1500 ml H_2O allow to cool. Add 552 ml liquid phenol slowly - cool bring to 2l volume.

200 + 276 / 1000

Preparation:

Using a one-liter Erlenmeyer flask, dissolve 83 g of phenol in 50 ml of distilled water. Cool the solution under tap water. Cautiously add 180 ml of 20% sodium hydroxide in small increments with good mixing. Dilute to one liter with distilled water. 500g bottle ≅ 485 ml

SODIUM HYPOCHLORITE (Stock)

(Technicon No. T01-0114)

Any good commercially available household bleach having 5.25% available chlorine may be used.

SODIUM HYPOCHLORITE (Working)

Dilute 200 ml of stock sodium hypochlorite to one liter with water.

SODIUM NITROPRUSSIDE -(sodium Nitroferricyanide)

Sodium Nitroprusside $[Na_2Fe(CN)_5NO \cdot 2H_2O]$	0.5	g
Distilled Water, q.s.	1000	ml

Preparation:

Dissolve 0.5 g sodium nitroprusside in 900 ml with distilled water and dilute to one liter.

STANDARDS

STOCK STANDARD, 100 mg N/l

Ammonium Sulfate $[(NH_4)_2SO_4]$	0.4716	g
Distilled Water, q.s.	1000	ml

Preparation:

In a one-liter volumetric flask, dissolve 0.4716 g ammonium sulfate in 900 ml of distilled water. Dilute to volume with distilled water. Prepare working standards ranging from 0.01 to 0.5 mg/l for calibration. ~~The working standards should be prepared fresh daily.~~

5ml Stock → 50ml B

	ml B		
.1ppm	= 1ml	→	100 ml
.2	= 2		"
.3	= 3		"
.4	= 4		"
.5	= 5		"

low NH_4^+

2ml Stock → 50ml B

	ml B		
.2ppm	5	→	100ml
.16	4		"
.12	3		"
.08	2		"
.04	1		"

OPERATING NOTES

1. All water used in the preparation of reagents should be deionized, acid distilled water.
2. For best results, the sample cups should be washed in deionized, acid distilled water and stored in plastic containers in an ammonia-free environment.
3. The alkaline phenol reagent should be filtered through a glass filter prior to use.

4. Where particulate matter is present, the solution must be filtered prior to the determination. This can be accomplished by having the Technicon Continuous Filter as an integral part of the system if the sample is such that Whatman #4 or equivalent filter paper is satisfactory.

5. If the system is being run in an ammonia contaminated environment, the air for segmenting the stream should be scrubbed through acid prior to its introduction into the system.

6. Before running the method, position the controls of the Modular Printer as follows:

CONTROL	POSITION
MODE Switch	Normal
SAMPLING RATE Switch	~~60~~ 40
RANGE Switch	500
DECIMAL Switch	000.

Details of Modular Printer Operation are provided in Technical Publication No. TA1-0278-10.

7. Alternate ranges may be obtained by utilization of the Std Cal control on the Colorimeter.

STOCK STANDARD A, 1000 μgat P/l

Anhydrous potassium dihydrogen phosphate (Technicon No T13-5069) (KH_2PO_4)	0.136	g
Deionized, distilled water, q.s.	1000	ml

Preparation:

Dissolve the potassium phosphate in 500 ml of deionized, distilled water in a volumetric flask. Dilute to one liter with deionized, distilled water. Add 1 ml of chloroform as a preservative.

STOCK STANDARD B, ~~40~~ 80 μgat P/l

Stock standard A	4 ml
Deionized, distilled water, q.s.	~~100~~ 50 ml

Preparation:

Dilute 4 ml of stock standard A in a volumetric flask to ~~100~~ 50 ml with deionized, distilled water. Prepare fresh daily.

WORKING STANDARDS

ml Stock B	μgat P/l
~~0.20~~	~~0.03~~
~~2.0~~ 1.0	0.8
~~4.0~~ 2.0	1.6
~~6.0~~ 3.0	2.4
~~8.0~~ 4.0	3.2
~~10.0~~ 5.0	4.0

Preparation:

Pipette stock B into a 100 ml volumetric flask. Dilute to 100 ml with deionized, distilled water. Prepare fresh daily.

1. A blank reading for the particular sea water of interest should be determined by sampling the sea water while running distilled water only through the reagent lines. The blank reading obtained should then be subtracted from the readings of the unknowns.

2. Glassware for the preparation of reagents and standards should be washed with one normal hydrochloric acid and rinsed thoroughly with deionized, distilled water in order to remove any traces of phosphate. Sample cups should be treated in a similar manner and then rinsed with the solution to be measured.

3. The ascorbic acid solution is stable for about two months if kept in a freezer or refrigerator. It is stable for about two weeks if not refrigerated. However, the container must be kept well stoppered.

4. Samples which are not run immediately should be preserved with 1 ml/l of chloroform.

5. The reagent baseline absorbance with reference to water should be approximately 0.015 absorbance units.

6. Alternate ranges may be obtained by utilization of the standard calibration dial on the Colorimeter.

7. Before running this method, switch the range on the Digital Printer to 400, set the Mode Switch into Normal position, set the Sampling Rate Switch to 30 and place the Decimal Switch in the 0.00 position. (See Instruction Manual No. TA1-0278-00.)

8. The Colorimeter should be operated in the Damp 1 mode.

ORTHO PHOSPHATE IN SEA WATER
(Range: 0-4 μgat P/l)
MANIFOLD NO. – 116-D221-01

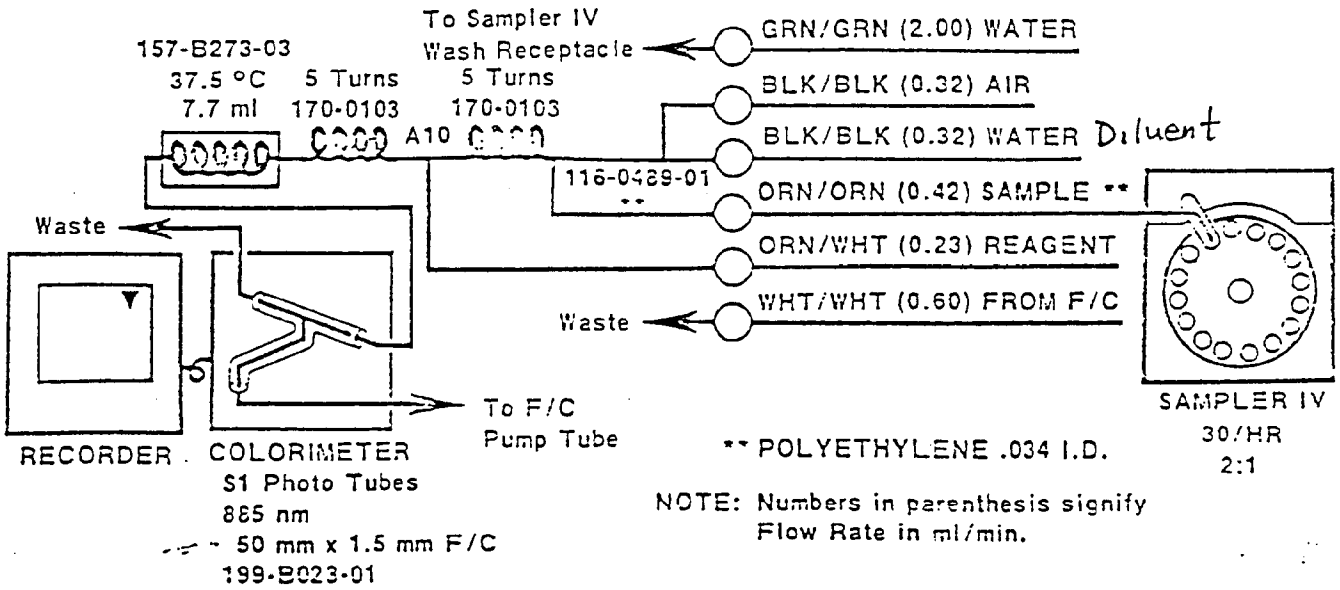

NOTE: Numbers in parenthesis signify Flow Rate in ml/min.

AutoAnalyzer II
INDUSTRIAL METHOD No. 155-71W
NOV. 1971

ORTHO PHOSPHATE IN SEA WATER

(Range: 0-4 μgat P/l)

GENERAL DESCRIPTION

The automated procedure for the determination of ortho phosphate in sea water depends on the formation of a phosphomolybdenum blue complex which is read colorimetrically at 885 nm.[1]

A single reagent solution is used consisting of an acidified solution of ammonium molybdate containing ascorbic acid and a small amount of antimony.

Interference from copper and iron is insignificant. Silicon at a level of 100 μgat Si/l causes an interference equivalent to approximately 0.04 μgat P/l.

Although arsenate produces a similar color to phosphate, sea water rarely contains arsenate in concentrations high enough to interfere. The salt error has been found to be less than 1%.

PERFORMANCE AT 30 SAMPLES PER HOUR

USING AQUEOUS STANDARDS:

Sensitivity (0.15 absorbance units)	4.0 μgat P/l
Coefficient of variation (95% confidence level at 2 μgat P/l)	2.96%
Detection limit	0.08 μgat P/l

REAGENTS

SULFURIC ACID, 4.9N

Sulfuric acid, concentrated (sp. gr. 1.84) (H_2SO_4)	136 ml
Deionized, distilled water, q.s.	1000 ml

Preparation:

Add 136 ml of concentrated sulfuric acid to 800 ml of deionized, distilled water while cooling. After this solution has cooled, dilute to one liter with deionized, distilled water.

AMMONIUM MOLYBDATE

Ammonium molybdate ($(NH_4)_6Mo_7O_{24} \cdot 4H_2O$)	40 g
Deionized, distilled water, q.s.	1000 ml

Preparation:

Dissolve 40 g of ammonium molybdate in 800 ml of deionized, distilled water. Dilute to one liter with deionized, distilled water.

ASCORBIC ACID

make 500 mls

Ascorbic acid, U.S.P. (Technicon No. T11-5070) ($C_6H_8O_6$)	9 ~~18~~ g
Deionized, distilled water, q.s.	500 ~~1000~~ ml

change every month

Preparation:

Dissolve 18 g of U.S.P. quality ascorbic acid in 800 ml of deionized, distilled water. Dilute to one liter with deionized, distilled water.

ANTIMONY POTASSIUM TARTRATE

Antimony potassium tartrate [$K(SbO)C_4H_4O_6 \cdot 1/2H_2O$]	3.0 g
Deionized, distilled water, q.s.	1000 ml

Preparation:

Dissolve 3.0 g of antimony potassium tartrate in 800 ml of deionized, distilled water. Dilute to one liter with deionized, distilled water.

COMBINED WORKING REAGENT

Sulfuric acid, 4.9N	50 ml
Ammonium molybdate	15 ml
Ascorbic acid	30 ml
Antimony potassium tartrate	5 ml

Preparation:

Combine reagents together in the order listed above: 50 ml of sulfuric acid, 15 ml of ammonium molybdate, 30 ml of ascorbic acid and 5 ml of antimony potassium tartrate. This reagent is stable for about eight hours.

WATER DILUENT

To deionized, distilled water add 2.0 cc Levor IV per liter.

10-86 100 drops / bottle

[1] Murphy, J., and Riley, J.P., A Modified Single Solution Method for the Determination of Phosphate in Natural Waters. Anal. Chim. Acta, 27, p. 30, 1962.

ORTHO PHOSPHATE IN SEA WATER
(Range: 0-4 μgat P/l)

GENERAL DESCRIPTION

The automated procedure for the determination of orthophosphate in sea water depends on the formation of phosphomolybdenum blue complex which is read spectrophotometrically at 885 nm.[1]

A single reagent solution is used consisting of an acid solution of ammonium molybdate containing ascorbic acid and a small amount of antimony.

Interference from copper and iron is insignificant. Silicate at a level of 100 μgat Si/l causes an interference equivalent to approximately 0.04 μgat P/l.

Although arsenate produces a similar color to phosphate, sea water rarely contains arsenate in concentrations high enough to interfere. The salt error has been found to be less than 1%.

PERFORMANCE AT 30 SAMPLES PER HOUR

USING AQUEOUS STANDARDS:

Sensitivity (0.15 absorbance units)	4.0 μgat P/l
Coefficient of variation (95% confidence level at 2 μgat P/l)	2.96%
Detection limit	0.08 μgat P/l

REAGENTS

SULFURIC ACID, 4.9N

Sulfuric acid, concentrated (sp. gr. 1.84) (H_2SO_4)	136 ml
Deionized, distilled water, q.s.	1000 ml

Preparation:

Add 136 ml of concentrated sulfuric acid to 800 ml deionized, distilled water while cooling. After this solution has cooled, dilute to one liter with deionized, distilled water.

AMMONIUM MOLYBDATE

Ammonium molybdate ($(NH_4)_6Mo_7O_{24} \cdot 4H_2O$)	40 g
Deionized, distilled water, q.s.	1000 ml

Preparation:

Dissolve 40 g of ammonium molybdate in 800 ml of deionized, distilled water. Dilute to one liter with deionized, distilled water.

ASCORBIC ACID

make 500 mls

Ascorbic acid, U.S.P. (Technicon No. T11-5070) ($C_6H_8O_6$)	9 ~~18~~ g
Deionized, distilled water, q.s.	500 ~~1000~~ ml

change every month

Preparation:

Dissolve 18 g of U.S.P. quality ascorbic acid in 800 ml of deionized, distilled water. Dilute to one liter with deionized, distilled water.

ANTIMONY POTASSIUM TARTRATE

Antimony potassium tartrate [$K(SbO)C_4H_4O_6 \cdot 1/2H_2O$]	3.0 g
Deionized, distilled water, q.s.	1000 ml

Preparation:

Dissolve 3.0 g of antimony potassium tartrate in 800 ml of deionized, distilled water. Dilute to one liter with deionized, distilled water.

COMBINED WORKING REAGENT

Sulfuric acid, 4.9N	50 ml
Ammonium molybdate	15 ml
Ascorbic acid	30 ml
Antimony potassium tartrate	5 ml

Preparation:

Combine reagents together in the order listed above: 50 ml of sulfuric acid, 15 ml of ammonium molybdate, 30 ml of ascorbic acid and 5 ml of antimony potassium tartrate. This reagent is stable for about eight hours.

WATER DILUENT

To deionized, distilled water add 2.0 cc Levor-N per liter.

10-86 100 drops [illegible] bottle

[1] Ivanov, J., and Riley, J.P., A Modified Single Solution Method for the Determination of Phosphate in Natural Waters. Anal. Chim. Acta, 27, p. 30, 1962.

Appendix B1 Soils Data- Particle Size Analysis

KING COUNTY WETLAND STUDY SOIL PARTICLE SIZE ANALYSIS 1988.

SAMPLE	SITE	#	DATE	% SAND	% SILT	% CLAY	
8407	B3I	O	110888	84.8	11.5	3.7	
8399	B3I	S	110888	93.0	5.2	1.8	
8406	B3I	T	110888	86.8	12.0	1.2	
8408	B3I	V	110888	77.0	22.5	0.5	
8430	B3I	X	110888	86.2	13.2	0.6	
8431	B3I	Y	110888	75.8	24.2	0.0	
8432	B3I	Z	110888	84.7	13.3	2.0	
1718	BBC24	S	160988	73.2	22.7	4.1	
8424	BBC24	Y	160988	87.3	12.2	0.5	
8425	BBC24	Z	160988	79.1	19.2	1.7	
8397	ELS39	X	110888		BELOW BLANK		
8398	ELS61	S	110888	83.1	13.6	3.3	
8385	ELS61	X	110888	81.7	18.1	0.2	
8386	ELS61	Y	110888	70.1	26.0	3.9	
8387	ELS61	Z	110888	81.9	16.7	1.4	
2118	ELW1	S	181188	15.7	81.9	2.5	
2118	ELW1	S	181188	81.9	15.7	2.5	
8391	ELW1	X	181188	81.7	17.5	0.8	
8391	ELW1	X	181188	17.5	81.7	0.8	
8392	ELW1	Y	181188	46.5	51.0	2.5	
8392	ELW1	Y	181188	51.0	46.5	2.5	
8393	ELW1	Z	181188	25.8	71.7	2.5	
8393	ELW1	Z	181188	71.7	25.8	2.5	
1621	FC1	S	20988	55.2	40.1	4.7	
8417	FC1	X	250888	49.6	44.7	5.7	
8417	FC1	X	250888	44.7	49.6	5.7	
8417	FC1	X	250888	100?	0.0	0.0	HIGH ORGANICS
8418	FC1	Y	250888	68.9	27.4	3.7	
8419	FC1	Z	250888	75.4	19.1	5.5	
1719	HC13	S	160988	UNABLE TO CALC. SILT+CLAY < CLAY			
8394	HC13	X	160988	86.9	11.0	2.1	
8398	HC13	Y	160988	99.1	0.0	0.9	HIGH ORGANICS
8396	HC13	Z	160988	87.9	7.3	4.8	
8401	JC28	4	20988	10.3	87.4	2.4	
8400	JC28	X	20988	80.2	14.5	5.3	
8401	JC28	Y	20988	2 HR. READING < BLANK			HIGH ORGANICS
8402	JC28	Z	20988	82.6	6.0	1.4	
8401	JC28	4	20988	87.4	10.3	2.4	
8411	LCR93	S	250888	100?	0.0	0.0	HIGH ORGANICS
8412	LCR93	T	20988	UNABLE TO CALC. SILT+CLAY < CLAY			
8433	LCR93	X	250888	100.0	0.0	0.0	HIGH ORGANICS
8434	LCR93	Y	250888	100.0	0.0	0.0	HIGH ORGANICS
8435	LCR93	Z	250888	100.0	0.0	0.0	HIGH ORGANICS

8423	LPS9	S	20988	98.6	0.0	1.4	HIGH ORGANICS
8420	LPS9	X	20988	94.4	4.5	1.1	
8421	LPS9	Y	20988	92.5	4.5	3.0	
8422	LPS9	Z	20988	91.4	7.8	0.8	
8428	MGR36	S	180988	76.7	19.5	3.8	
8388	MGR36	X	180988	37.0	62.7	0.3	
8389	MGR36	Y	180988	79.6	19.0	1.4	
8390	MGR36	Z	180988	49.0	48.7	2.3	
8426	PC12	X	180988	88.1	0.8	11.1	
8427	PC12	Y	180988	20.7	55.7	23.6	
8403	RR5	X	180988	78.0	19.8	2.2	
8404	RR5	Y	180988	85.9	0.0	14.1	
8405	RR5	Z	180988	83.5	11.0	5.5	
8409	SR24	S	250888	89.7	3.0	7.3	
8410	SR24	T	250888	100?	0.0	0.0	HIGH ORGANICS
8414	SR24	X	250888	100?	0.0	0.0	HIGH ORGANICS
8415	SR24	Y	250888	100?	0.0	0.0	HIGH ORGANICS
8416	SR24	Z	250888	54.7	43.1	2.2	

Appendix B2- SOIL CORE DATA

WETLAND	TRANSECT	SAMPLE	REDOX	PH	COLOR
B3I	A0+3W	8808430	-209	6.63	10YR 3/2
B3I	A15+2W	8808431	-187	6.51	10YR 2/2
B3I	A29+1W	8808432	-150	6.52	10YR 2/2
B3I	A51+2W	8808399	-85	6.66	10YR 3/2
B3I	A68+0W	8808406	-25	6.60	10YR 3/2
B3I	B0+0W	8808407	-105	6.35	10YR 1/2
B3I	B20+2W	8808408	-258	6.50	10YR 3/2
BBC24	ADAM		-220	6.14	10YR 3/2
BBC24	A20+5S		-173	5.78	10YR 2/2
BBC24	B15+3S		-189	5.67	10YR 3/2
ELS39	A35+4W	8808398	245	4.34	10YR 2/2
ELS39	B17+1W	8808398	-.04	5.35	10YR 2/2
ELS61	A0+3N	8808385	27	5.50	10YR 3/2
ELS61	AORENH2O	8808386	-9	5.73	10YR 4/2
ELS61	A0+50	8808387	71	5.84	10YR 3/2
ELW1	A35+1S	8808391	+373	6.35	10YR 3/2
ELW1	A60+1S	8808392	+356	5.32	10YR 3/2
ELW1	A5+2S	88032118	94	6.14	10YR 3/1
ELW1	A123+1S	8808313	-254	5.62	10YR 4/3,2.5Y2/0
FC1	ARIVER	8808417	-292	6.96	10YR 3/1
FC1	A39+1W	8808418	-222	6.26	10YR 3/2
FC1	A62+12S	8808419	+226	5.00	7.5YR 4/4
FC1	B38+1W	8808450	-400	6.11	10YR 4/2
HC13	A12+1S	8394			
HC13	A42+1S	8395			
HC13	A69+3S	8396			
HC13	B69+3S				
HC13	B30+1W				
JC28	A68+2W	8808400	-222	5.94	10YR2/1, 5YR 3/2
JC28	A94+1N	8808401	145	5.87	5YR 2.5/1
JC28	B30+0	8808402	-20	5.73	5YR 2.5/1
LCR93	A27+1W	8808433	-102	5.90	5YR 2.5/1
LCR93	A60+1W	8808434	197	5.61	5YR 2.5/2
LCR93	A150+1E	8808435	-32	5.45	5YR 2.5/1
LCR93	A156+5E	8808412	-167	6.17	10YR 3/2
LCR93	A151+1W	8808411	-36	5.45	5YR 2.5/1
LPS9	POND	8808420	-201	5.60	10YR3/2
LPS9	POND2	8808421	-201	5.6	10YR3/2
LPS9	A12+1W	8808422	+242	4.00	5YR2.5/2
LPS9	B30+1W	8808429	+237	4.85	5YR2.5/1

Appendix B3 Soils Data- Nitrogen, Phosphorous LOI

KING COUNTY WETLAND STUDY NITROGEN AND TOTAL PHSPHORUS ANALYSIS 1988.

WETLAND	#	DATE	[N]	[TP]	TOT SOL	% MST	% SLD	VOL SOL	LOSS ON IGNITION
B3I	O	110888	2740.31	303.117	600000	40	60	62000	10.333
B3I	S	110888	2510.04	284.035	480000	51	48	77000	16.042
B3I	T	110888	433.6	324.177	750000	25	75	68000	9.067
B3I	V	110888	604.87	434.229	590000	41	59	46000	7.797
B3I	X	110888	502.75	393.553	350000	65	35	76000	21.714
B3I	Y	110888	2146.56	304.707	330000	67	33	81000	24.545
B3I	Z	110888	2402.04	106.964	180000	82	18	80000	44.444
BBC24	S	160988	1638.67	69.534	290000	71	29	100000	34.483
BBC24	Y	160988	1524.57	151.536	430000	57	43	66000	15.349
BBC24	Z	160988	1692.43	154.235	660000	34	66	64000	9.697
BBC24		21188			280000	72	28		0.000
BBC24		101188	737.6						
ELS39	X	110888	10739.1	204.985	530000	47	53	84000	15.849
ELS61	S	110888	3392.3	1177.383	310000	69	31	190000	61.290
ELS61	X	110888	2137.77	197.731	220000	78	22	92000	41.818
ELS61	Y	110888	2558.65	466.239	480000	52	48	75000	15.625
ELS61	Z	110888	2608.7	271.828	490000	51	49	69000	14.082
ELS61		311088			120000	88	12		0.000
ELS61	S	181188	6154.16	293.47	610000	39	61	50000	8.197
ELS61		101188	437.7						
ELW1		101188	96.7						
ELW1	X	181188	636.67	342.16	720000	28	72	38000	5.278
ELW1	Y	181188	3500.36	497.462	610000	39	61	92000	15.082
ELW1	Z	181188	7782.57	98.479	150000	85	15	88000	58.667
ELW1		21188			650000	35	65	0	0.000
FC1	X	260888	2122.65	385.674	570000	43	57	62000	10.877
FC1	Y	250888	1757.6	409.701	400000	60	40	64000	16.000
FC1	Z	250888	2052.56	288.475	600000	40	60	80000	13.333
FC1	S	20988		240.915	390000	61	39	49000	12.564
FC1	X	20988			570000	43	57	62000	10.877
FC1	Y	20988			390000	61	39	59000	15.128
FC1	Z	20988			580000	42	58	80000	13.793
FC1	S	30988	2021						
FC1		21188			530000	47	53	0	0.000
FC1	X	181188			530000	47	53	63000	11.887
FC1		101188	551.7						
HC13	S	160988	2825.45	141.519	160000	84	16	120000	75.000
HC13	X	160988	2847.07	254.044	84000	92	8.4	31000	36.905
HC13	Y	160988	3140.88	129.98	130000	87	13	91000	70.000
HC13	Z	160988	2974.86	195.365	140000	86	14	88000	62.857
HC13		21188			180000	82	18		0.000
HC13		101188	1775.5						
JC28	X	20988	2256.88	449.126	350000	65	35	85000	24.286
JC28	Y	20988		549.091	220000	78	22	140000	63.636
JC28	Z	20988		382.896	180000	82	18	130000	72.222
JC28	Y	30988	4909.53						
JC28	Z	30988	3536.45						
JC28		311088			150000	85	15		0.000
JC28		181188			220000	78	22	150000	68.182
JC28		91188	955.8						
LCR93	S	250888	4007.04	124.421	160000	84	16	100000	62.500
LCR93	X	250888	3889.67	203.078	170000	83	17	110000	64.706
LCR93	Y	250888	4375.21	140.595	160000	84	16	120000	75.000
LCR93	Z	250888	3798.86	102.526	170000	83	17	110000	64.706

LCR93	J	20988		203.213						
LCR93	T	20988			170000	83	17	110000	64.706
LCR93	T	30988	4145.79						
LCR93		311088			470000	53	47		0.000
LCR93		91188	1807.8						
LPS9	S	20988	5896.04	433.17	350000	65	35	120000	34.286
LPS9	S	20988	5896.04	307.582	190000	81	19	150000	78.947
LPS9	X	20988		219.651	200000	80	20	110000	55.000
LPS9	Y	20988	2713.96	264.021	180000	82	18	110000	61.111
LPS9	Z	20988	351.83	316.688	420000	58	42	290000	69.048
LPS9	Z	20988	351.83	310.353	420000	58	42	290000	69.048
LPS9	Z	20988	351.83	405.562	420000	58	42	290000	69.048
LPS9	S	30988	4603.52						
LPS9	X	30988	3397.93						
LPS9		311088			1130000	87	13		0.000
LPS9		91188	1283.7						
MGR36	S	180888	1048.04	371.249	620000	38	62	43000	6.935
MGR36	X	180888	1860.09	292.885	390000	61	39	68000	17.436
MGR36	Y	180888	2640.52	342.089	190000	81	19	68000	35.789
MGR36	Z	180888	1698.52	205.723	370000	63	37	64000	17.297
MGR36		311088			200000	80	20		0.000
MGR36		91188	544.2						
PC12	X	180888	3246.86	179.488	170000	83	17	110000	64.706
PC12	Y	180888	2939.12	128.098	500000	50	50	65000	13.000
PC12		21188			250000	75	25		
PC12		101188	372.2						
RR5	X	180888	1783.38	196.527	430000	57	43	66000	15.349
RR5	Y	180888	3199.86	113.307	94000	91	9.4	83000	88.298
RR5	Z	180888	2736.64	140.042	260000	74	26	89000	34.231
RR5		311088			180000	82	18		0.000
RR5		110988	990.6						
SR24	S	250888	2524.45	157.476	200000	80	20	94000	47.000
SR24	S	250888	2524.45	162.456	200000	80	20	94000	47.000
SR24	S	250888	2524.45	250.798	200000	80	20	94000	47.000
SR24	T	250888	3398.17	110.344	150000	85	15	100000	66.667
SR24	X	250888	3381.77	60.655	120000	88	12	110000	91.667
SR24	X	250888	3462.72	60.655	120000	88	12	110000	91.667
SR24	Y	250888	3062.03	40.778	130000	87	13	120000	92.308
SR24	Z	250888	2427.34	115.594	130000	87	13	99000	76.154
SR24		21188			170000	83	17		0.000
SR24		101188	886.1						

	ARSENIC WET WT	ARSENIC DRY WT	CADMIUM WET WT	CADMIUM DRY WT	COPPER WET WT	COPPER DRY WT	LEAD WET WT	LEAD DRY WT	ZINC WET WT	ZINC DRY WT
B3I	M=6.0 STD=2.6	M=14.0 STD=7.3	M=0.17 STD=0.14	M=0.6 STD=0.2	M=12.4 STD=2.8	M=29.1 STD=12.4	M=48.9 STD=26.8	M=120.3 STD=71.6	M=48.7 STD=25.4	M=111.6 STD=76.8
BBC24	M=2.7 STD=0.8	M=8.8 STD=7.1	M=0.16 STD=0.09	M=4.8 STD=7.9	M=3.5 STD=0.4	M=19.7 STD=21.0	M=7.6 STD=2.6	M=15.0 STD=10.0	M=9.3 STD=3.6	M=18.0 STD=5.7
ELS39	M=1.9 STD=0.0	M=5.8 STD=0.0	M=0.0 STD=0.0	M=* STD=*	M=4.7 STD=0.0	M=14.0 STD=0.0	M=7.9 STD=0.0	M=24.0 STD=0.0	M=1.1 STD=0.0	M=3.3 STD=0.0
ELS61	M=3.2 STD=1.0	M=12.2 STD=8.3	M=0.13 STD=0.10	M=0.5 STD=0.3	M=9.7 STD=6.3	M=36.2 STD=26.5	M=10.5 STD=4.1	M=38.3 STD=25.0	M=15.3 STD=6.3	M=53.3 STD=28.8
ELW1	M=5.3 STD=1.7	M=12.2 STD=6.3	M=0.20 STD=0.07	M=1.3 STD=1.3	M=10.2 STD=2.8	M=22.8 STD=7.7	M=46.8 STD=15.7	M=109.5 STD=62.9	M=35.0 STD=11.0	M=77.0 STD=24.0
FC1	M=3.8 STD=0.4	M=8.1 STD=1.4	M=0.07 STD=0.09	M=0.3 STD=0.1	M=10.5 STD=5.0	M=22.0 STD=8.0	M=18.4 STD=14.6	M=39.7 STD=26.6	M=29.5 STD=21.4	M=60.5 STD=34.8
HC13	M=1.3 STD=0.8	M=7.1 STD=4.3	M=0.18 STD=0.14	M=0.9 STD=0.7	M=4.8 STD=3.2	M=24.8 STD=9.8	M=4.1 STD=4.1	M=27.2 STD=19.7	M=4.0 STD=4.1	M=18.0 STD=11.0
JC28	M=1.5 STD=0.9	M=6.5 STD=2.9	M=0.0 STD=0.0	M=0.7 STD=0.2	M=4.3 STD=1.3	M=18.7 STD=3.2	M=5.4 STD=3.4	M=23.7 STD=14.4	M=3.7 STD=1.1	M=16.3 STD=3.8
LCR93	M=1.4 STD=0.6	M=8.3 STD=3.6	M=0.0 STD=0.0	M=* STD=*	M=2.5 STD=1.2	M=14.7 STD=7.6	M=7.3 STD=2.0	M=42.2 STD=11.1	M=1.1 STD=0.6	M=8.0 STD=1.3

	ARSENIC WET WT	ARSENIC DRY WT	CADMIUM WET WT	CADMIUM DRY WT	COPPER WET WT	COPPER DRY WT	LEAD WET WT	LEAD DRY WT	ZINC WET WT	ZINC DRY WT
LPS9	M=6.0 STD=2.7	M=23.0 STD=9.9	M=0.16 STD=0.16	M=0.7 STD=0.2	M=10.8 STD=6.1	M=38.4 STD=12.3	M=20.7 STD=17.4	M=68.4 STD=38.0	M=11.0 STD=7.7	M=45.2 STD=33.0
MGR36	M=3.7 STD=1.2	M=7.9 STD=2.8	M=0.0 STD=0.0	M=* STD=*	M=17.5 STD=2.1	M=36.5 STD=3.1	M=5.3 STD=2.0	M=11.2 STD=4.6	M=31.8 STD=3.9	M=66.8 STD=9.1
PC12	M=3.5 STD=1.3	M=12.8 STD=7.4	M=0.11 STD=0.15	M=1.4 STD=0.0	M=7.4 STD=2.4	M=27.0 STD=17.0	M=19.0 STD=12.8	M=104.0 STD=121.6	M=15.7 STD=16.1	M=38.5 STD=12.0
RR5	M=1.8 STD=0.2	M=6.2 STD=2.6	M=0.06 STD=0.05	M=0.5 STD=0.2	M=4.5 STD=3.2	M=14.7 STD=4.2	M=7.7 STD=1.9	M=42.3 STD=38.0	M=14.5 STD=12.0	M=49.0 STD=11.1
SR24	M=1.5 STD=1.1	M=10.5 STD=7.2	M=0.06 STD=0.09	M=1.0 STD=0.0	M=5.1 STD=5.2	M=32.2 STD=27.5	M=23.1 STD=21.1	M=194.3 STD=128.4	M=6.9 STD=7.9	M=42.6 STD=41.4

SOIL METALS DATA

LAB	WETCODE	FIELD_ID	AS_DW	AS_DWDL	CD_DW	CD_DWDL	CU_DW
1001-01	B3I	A0+3W	11		0.55		33
1001-02	B3I	A15+2W	19		0.77		47
1001-03	B3I	A29+1W	19		0.67		40
1001-04	B3I	0+0W	25		0.83		27
1001-05	B3I	20+2W	9.80		0.26		15
1001-06	B3I	68+0W	3.20			0.14	13
1001-07	B3I	68+1W	11			0.29	29
1089-03	BBC24	B15+2S	17	1.2	14	43	44
1089-05	BBC24	ADAM	3.9		0.12		6.5
1089-07	BBC24	A20+5S	5.5		0.36		8.7
1001-12	ELS39	A35+4W	5.80			0.42	14
1001-08	ELS61	0W	5.80		0.34		19
1001-09	ELS61	A0W+50	22			0.89	53
1001-10	ELS61	A0+3N	4.80		0.20		8.70
1001-11	ELS61	17+1W	16		0.82		64
1118-04	ELW1	A5+2S	6.2		3.2		19.
1118-01	ELW1	A22+1S	21		1.1		34
1118-02	ELW1	A35+1S	12		0.32		17.
1118-03	ELW1	A60+1S	9.6		0.42		21
1051-07	FC1	A39+1N	9.30		0.19		20
1051-08	FC1	ARIV	7.70		0.35		33
1051-11	FC1	A62+12S	6.30			0.21	14
1068-06	FC1	B38	9.20			0.28	21
1089-01	HC13	B30	5.6		0.3		36
1089-02	HC13	A12+1S	6.8		1.1		30
1089-04	HC13	A42-1S	13		0.56		16
1089-06	HC13	A69+3S	2.8		1.8		17
1068-01	JC28	A94+1N	7.60			0.48	21
1068-02	JC28	B30	3.20			0.54	15
1068-09	JC28	A68+2W	8.60			0.35	20
1051-03	LCR93	A60+1W	6.30			0.59	12
1051-04	LCR93	A150+1E	5			0.66	12
1051-06	LCR93	A151+1W	6.60			0.56	13
1051-12	LCR93	A27+1W	14			0.57	28
1068-08	LCR93	A156+5E	9.60			0.64	8.70
1068-03	LPS9	POND2	21		0.81		31
1068-04	LPS9	POND	14			0.48	28
1068-05	LPS9	B69+1E	40		0.63		58
1068-07	LPS9	B30+1W	20		0.39		32
1068-10	LPS9	A12+1W	20		0.87		43
1032-01	MGR36	B57	6			0.23	40
1032-02	MGR36	B70	6.50			0.24	33
1032-03	MGR36	A2+1W	7.10			0.25	35
1032-04	MGR36	A243+1W	12			0.26	38
1032-08	PC12	A83+E	18		1.40		39
1032-09	PC12	B38+2E	7.50			0.16	15
1032-05	RR5	A138+2W	5.50		0.35		18
1032-06	RR5	A2711E	9.10		0.60		10
1032-07	RR5	B40+6MW	4			0.21	16
1051-01	SR24	A14+2E	19		0.99		50

SOIL METALS DATA (contd 2)

LAB	WETCODE	FIELD_ID	AS_DW	AS_DWDL	CD_DW	CD_DWDL	CU_DW
1051-02	SR24	C45+5NV	4.40			0.78	13
1051-05	SR24	43+6N	11			0.62	17
1051-09	SR24	E+0+5N	16		1		72
1051-10	SR24	C43+6N	2.30			0.54	9.20

LAB	WETCODE	FIELD_ID	AS_WW	AS_WWDL	CD_WW	CD_WWDL	CU_WW
1001-01	B3I	A0+3W	5.5		0.28		16
1001-02	B3I	A15+2W	6.5		0.26		16
1001-03	B3I	A29+1W	4.6		0.16		9.3
1001-04	B3I	0+0W	11		0.35		12
1001-05	B3I	20+2W	6.4		0.17		9.6
1001-06	B3I	68+0W	2.7		0	0.11	11
1001-07	B3I	68+1W	5		0	0.13	13
1089-03	BBC24	B15+2S	3.6		0.25		3
1089-05	BBC24	ADAM	2.2		0.07		3.8
1089-07	BBC24	A20+5S	2.3		0.15		3.6
1001-12	ELS39	A35+4W	1.9		0	0.14	4.7
1001-08	ELS61	0W	2.4		0.14		7.8
1001-09	ELS61	A0W+50	2.6		0	0.11	6.5
1001-10	ELS61	A0+3N	3		0.13		5.5
1001-11	ELS61	17+1W	4.7		0.24		19
1118-04	ELW1	A5+2S	3.2		0.10		9.8
1118-01	ELW1	A22+1S	4.5		0.22		7.2
1118-02	ELW1	A35+1S	7.1		0.19		9.9
1118-03	ELW1	A60+1S	6.2		0.27		14
1051-07	FC1	A39+1N	3.8		0.08		8.3
1051-08	FC1	ARIV	4.2		0.2		18
1051-11	FC1	A62+12S	3.7		0	0.12	8.2
1068-06	FC1	B38	3.3		0	0.1	7.5
1089-01	HC13	B30	0.81		0.04		5.1
1089-02	HC13	A12+1S	2.1		0.34		9.2
1089-04	HC13	A42-1S	2		0.09		2.5
1089-06	HC13	A69+3S	0.42		0.26		2.5
1068-01	JC28	A94+1N	1.7		0	0.1	4.7
1068-02	JC28	B30	0.61		0	0.1	2.8
1068-09	JC28	A68+2W	2.3		0	0.09	5.3
1051-03	LCR93	A60+1W	1.1		0	0.11	2.1
1051-04	LCR93	A150+1E	0.87		0	0.12	2.1
1051-06	LCR93	A151+1W	1.1		0	0.1	2.2
1051-12	LCR93	A27+1W	2.3		0	0.09	4.7
1068-08	LCR93	A156+5E	1.6		0	0.11	1.5
1068-03	LPS9	POND2	4.5		0.17		6.7
1068-04	LPS9	POND	2.8		0	0.1	5.9
1068-05	LPS9	B69+1E	7.9		0.12		12
1068-07	LPS9	B30+1W	5.4		0.1		8.6
1068-10	LPS9	A12+1W	9.5		0.42		21
1032-01	MGR36	B57	3		0	0.11	20
1032-02	MGR36	B70	3.3		0	0.12	17

SOIL METALS DATA (contd 3)

LAB	WETCODE	FIELD_ID	AS_WW	AS_WWDL	CD_WW	CD_WWDL	CU_WW
1032-03	MGR36	A2+1W	3.1		0	0.11	15
1032-04	MGR36	A243+1W	5.5		0	0.12	18
1032-08	PC12	A83+E	2.6		0.21		5.7
1032-09	PC12	B38+2E	4.4		0	0.09	9.1
1032-05	RR5	A138+2W	1.5		0.1		5
1032-06	RR5	A2711E	1.9		0.07		1.1
1032-07	RR5	B40+6MW	1.9		0	0.1	7.4
1051-01	SR24	A14+2E	2.2		0.12		5.8
1051-02	SR24	C45+5NV	0.61		0	0.11	1.8
1051-05	SR24	43+6N	1.5		0	0.08	2.4
1051-09	SR24	E+0+5N	3		0.2		14
1051-10	SR24	C43+6N	0.39		0	0.09	1.6

WETCODE	FIELD_ID	CU_DWDL	PB_DW	PB_DWDL	ZN_DW	ZN_DWDL
B3I	A0+3W		150		130	
B3I	A15+2W		210		170	
B3I	A29+1W		180		130	
B3I	0+0W		140		230	
B3I	20+2W		100		63	
B3I	68+0W		3.90		3.20	
B3I	68+1W		58		55	
BBC24	B15+2S					
BBC24	ADAM		7.9		22	
BBC24	A20+5S		22		14	
ELS39	A35+4W		24		3.30	
ELS61	0W		17		37	
ELS61	A0W+50		65		75	
ELS61	A0+3N		17		21	
ELS61	17+1W		54		80	
ELW1	A5+2S		57		56	
ELW1	A22+1S		200		110	
ELW1	A35+1S		81		79	
ELW1	A60+1S		100		63	
FC1	A39+1N		28		59	
FC1	ARIV		71		110	
FC1	A62+12S		9.80		33	
FC1	B38		50		40	
HC13	B30			1.7	10	
HC13	A12+1S		25		34	
HC13	A42-1S		48		16	
HC13	A69+3S		8.7		12	
JC28	A94+1N		38		12	
JC28	B30		9.10		19	
JC28	A68+2W		24		18	
LCR93	A60+1W		49		7.10	
LCR93	A150+1E		50			5.30
LCR93	A151+1W		43		6.70	
LCR93	A27+1W		23		9.10	

SOIL METALS DATA (contd 4)

WETCODE	FIELD_ID	CU_DWDL	PB_DW	PB_DWDL	ZN_DW	ZN_DWDL
LCR93	A156+5E		46		9	
LPS9	POND2		44		76	
LPS9	POND		19		51	
LPS9	B69+1E		110		13	
LPS9	B30+1W		69		77	
LPS9	A12+1W		100		9	
MGR36	B57		9.10		65	
MGR36	B70		7.80		60	
MGR36	A2+1W		9.90		62	
MGR36	A243+1W		18		80	
PC12	A83+E		190		30	
PC12	B38+2E		18		47	
RR5	A138+2W		30		37	
RR5	A2711E		85		51	
RR5	B40+6MW		12		59	
SR24	A14+2E		300		72	
SR24	C45+5NV			7.80	25	
SR24	43+6N		230		12	
SR24	E+0+5N		240		100	
SR24	C43+6N		7.40		4.30	

WETCODE	FIELD_ID	CU_WWDL	PB_WW	PB_WWDL	ZN_WW	ZN_WWDL
B3I	A0+3W		78		65	
B3I	A15+2W		70		57	
B3I	A29+1W		42		31	
B3I	0+0W		58		95	
B3I	20+2W		65		41	
B3I	68+0W		3.2		27	
B3I	68+1W		26		25	
BBC24	B15+2S		8.9		9.1	
BBC24	ADAM		4.6		13	
BBC24	A20+5S		9.3		5.9	
ELS39	A35+4W		7.9		1.1	
ELS61	0W		7		15	
ELS61	A0W+50		7.8		9.1	
ELS61	A0+3N		11		13	
ELS61	17+1W		16		24	
ELW1	A5+2S		29		29	
ELW1	A22+1S		43		23	
ELW1	A35+1S		48		47	
ELW1	A60+1S		67		41	
FC1	A39+1N		11		24	
FC1	ARIV		39		61	
FC1	A62+12S		5.7		19	
FC1	B38		18		14	
HC13	B30		0	0.24	1.5	
HC13	A12+1S		7.8		10	
HC13	A42-1S		7.4		2.5	

SOIL METALS DATA (contd 5)

WETCODE	FIELD_ID	CU_WWDL	PB_WW	PB_WWDL	ZN_WW	ZN_WWDL
HC13	A69+3S		1.3		1.8	
JC28	A94+1N		8.3		2.7	
JC28	B30		1.7		3.6	
JC28	A68+2W		6.2		4.9	
LCR93	A60+1W		8.9		1.3	
LCR93	A150+1E		8.6		0	0.92
LCR93	A151+1W		7.5		1.2	
LCR93	A27+1W		3.9		1.5	
LCR93	A156+5E		7.5		1.5	
LPS9	POND2		9.4		16	
LPS9	POND		3.9		11	
LPS9	B69+1E		22		2.7	
LPS9	B30+1W		19		21	
LPS9	A12+1W		49		4.4	
MGR36	B57		4.5		32	
MGR36	B70		3.9		30	
MGR36	A2+1W		4.4		28	
MGR36	A243+1W		8.2		37	
PC12	A83+E		28		4.3	
PC12	B38+2E		10		27	
RR5	A138+2W		8.4		10	
RR5	A2711E		9.2		5.5	
RR5	B40+6MW		5.6		28	
SR24	A14+2E		36		8.4	
SR24	C45+5NV		0	1.1	3.5	
SR24	43+6N		32		1.7	
SR24	E+0+5N		46		20	
SR24	C43+6N		1.3		0.74	

Appendix B5 Soils Data- Microtox

KING COUNTY WETLAND STUDY MICROTOX DATA, 1988.

DATE	SITE	EC 50 (PPM)
91188	RR5	990.6
91188	MGR36	544.2
91188	LPS9	1283.7
91188	JC28	955.8
91188	LCR93	1807.8
101188	BBC24	737.6
101188	FC1	551.7
101188	ELW1	96.7
101188	PC12	372.2
101188	HC13	1775.5
101188	ELS61	437.7
101188	SR24	886.1

EC 50= Concentration of soil material (ppm) added to bioluminescent bacterial growth medium that produced a 50% reduction in light production (relative to controls) in a 15 minute exposure.

Appendix B6 Soils Data- Litter Content

KING COUNTY WETLAND STUDY LITTER SAMPL

SAMPLE	Cu (AA) PPM	CARBON %	TOT N %	TOT P %
C1	24.03	47.8	0.733	0.051
C2	44.38	48.4	0.813	0.056
C3	33.50	48.3	0.800	0.056
C4	32.75	47.8	0.720	0.051
C5	28.35	47.5	0.782	0.060
H1	10.20	46.4	1.835	0.095
H2	11.05	45.7	2.030	0.112
H3	7.73	46.4	1.792	0.100
H4	9.05	47.3	1.688	0.089
H5	10.67	46.0	1.790	0.094
S1	9.22	44.3	1.827	0.124
S2	8.35	44.0	1.832	0.121
S3	8.14	44.9	2.061	0.138
S4	10.75	46.1	1.858	0.131
S5	7.76	44.6	1.864	0.125
NBS Pin	43.11	???	1.194	0.105

Appendix C1- Emergence Data for Macroinvertebrates Captured in Each Wetland During Autumn 1988 Survey.

WA: King County Wetlands Project
Insect Emergence 1988 :
Bellevue 3I File: 88BV3I
Sept. 15- Nov 8, 1988 Cumulative Days:
No. of individuals per square meter.

	TRAP				
TAXA	A	B	C	AVG	VAR
Collembola	68	20	72	53.3	558.2
Psocoptera	36	4	84	41.3	1080.9
Thysanoptera	8	4	12	8.0	10.7
Hemiptera	4	0	4	2.7	3.6
Homoptera					
Aphidae	4	144	8	52.0	4234.7
Cercopidae	4	0	8	4.0	10.7
Cicadellidae	0	0	0	0.0	0.0
Neuroptera					
Hemerobiidae	16	0	8	8.0	42.7
Coleoptera	0	0	4	1.3	3.6
Lepidoptera	0	4	0	1.3	3.6
Hymenoptera					
Formicidae	12	0	0	4.0	32.0
Parasitoids	64	20	76	53.3	579.6
Arachnida	4	0	0	1.3	3.6
TOTAL TERRESTRIAL	220	196	276	230.7	1123.6
Plecoptera	0	0	0	0.0	0.0
Trichoptera	0	0	4	1.3	3.6
Diptera					
Nematocera	132	76	188	132.0	2090.7
Brachycera	164	84	212	153.3	2787.6
TOTAL AQUATIC	296	160	404	286.7	9966.2
GRAND TOTAL	516	356	680	517.3	17496.9

WA: King County Wetlands Project
Insect Emergence 1988 :
Big Bear 24 File: 88BB24
Sept. 15- Nov. 9, 1988
No. of individuals per square meter.

TAXA	TRAP A	B	C	AVG	VAR
Collembola	40	28	8	25.3	174.2
Psocoptera	72	140	244	152.0	5002.7
Thysanoptera	8	8	0	5.3	14.2
Hemiptera	0	0	.0	0.0	0.0
Homoptera					
Aphidae	0	20	0	6.7	88.9
Cercopidae	4	0	0	1.3	3.6
Cicadellidae	0	4	0	1.3	3.6
Neuroptera					
Hemerobiidae	0	0	0	0.0	0.0
Coleoptera	16	12	8	12.0	10.7
Lepidoptera	0	0	0	0.0	0.0
Hymenoptera					
Formicidae	0	0	0	0.0	0.0
Parasitoids	16	20	20	18.7	3.6
Arachnida	4	0	12	5.3	24.9
TOTAL TERRESTRIAL	160	232	292	228.0	2912.0
Plecoptera	0	0	0	0.0	0.0
Trichoptera	4	0	0	1.3	3.6
Diptera					
Nematocera	208	300	588	365.3	26200.9
Brachycera	24	28	12	21.3	46.2
TOTAL AQUATIC	236	328	600	388.0	23882.7
GRAND TOTAL	396	560	892	616.0	42570.7

WA: King County Wetlands Project
Insect Emergence 1988
Lower Cedar River 93 File: 88CR93
Spt. 14- Nov. 7, 1988
No. of individuals per square meter.

TAXA	TRAP A	B	C	AVG	VAR
Collembola	4	8	12	8	10.7
Psocoptera	96	188	100	128	1802.7
Thysanoptera	28	0	20	16	138.7
Hemiptera	0	4	4	3	3.6
Homoptera					
Aphidae	20	32	76	43	579.6
Cercopidae	100	52	116	89	739.6
Cicadellidae	20	4	44	23	270.2
Neuroptera					
Hemerobiidae	4	0	0	1	3.6
Coleoptera	16	24	44	28	138.7
Lepidoptera	4	0	0	1	3.6
Hymenoptera					
Formicidae	0	0	4	1	3.6
Parasitoids	128	88	400	205	19214.2
Arachnida	24	4	20	16	74.7
TOTAL TERRESTRIAL	444	404	840	563	38723.6
Plecoptera	0	0	12	4	32.0
Trichoptera	52	12	44	36	298.7
Diptera					
Nematocera	1102	1000	1460	1187	38907.6
Brachycera	672	272	708	551	39043.6
TOTAL AQUATIC	1826	1284	2224	1778	148418.7
GRAND TOTAL	2270	1688	3064	2341	318059.6

JUN 21 1989

WA: King County Wetlands Project
Insect Emergence 1988 :
Forbes Creek 1 File: 88FC1
Sept. 15- Nov. 9, 1988
No. of individuals per square meter.

TAXA	TRAP A	B	C	AVG	VAR
Collembola	140	164	20	108.0	3968.0
Psocoptera	0	0	0	0.0	0.0
Thysanoptera	16	16	0	10.7	56.9
Hemiptera	0	0	0	0.0	0.0
Homoptera					
Aphidae	216	324	16	185.3	16280.9
Cercopidae	4	16	8	9.3	24.9
Cicadellidae	8	40	12	20.0	202.7
Neuroptera					
Hemerobiidae	0	4	0	1.3	3.6
Coleoptera	0	8	0	2.7	14.2
Lepidoptera	0	4	4	2.7	3.6
Hymenoptera					
Formicidae	0	0	0	0.0	0.0
Parasitoids	8	24	24	18.7	56.9
Arachnida	60	40	48	49.3	67.6
TOTAL TERRESTRIAL	452	640	132	408.0	43978.7
Plecoptera	0	0	0	0.0	0.0
Trichoptera	0	4	4	2.7	3.6
Diptera					
Nematocera	1080	344	556	660.0	95690.7
Brachycera	8	12	16	12.0	10.7
TOTAL AQUATIC	1088	360	576	674.7	93198.2
GRAND TOTAL	1540	1000	708	1082.7	118787.6

WA: King County Wetlands Project
Insect Emergence 1988 :
Mid-Green River 36 File: 88GR36
Sept. 14-Nov. 7, 1988
No. of individuals per square meter.

TAXA	TRAP A	B	C	AVG	VAR
Collembola	8	0	20	9.3	67.6
Psocoptera	28	20	44	30.7	99.6
Thysanoptera	4	4	0	2.7	3.6
Hemiptera	0	0	4	1.3	3.6
Homoptera					
Aphidae	52	28	0	26.7	451.6
Cercopidae	4	0	8	4.0	10.7
Cicadellidae	0	24	4	9.3	110.2
Neuroptera					
Hemerobiidae	0	0	0	0.0	0.0
Coleoptera	8	16	16	13.3	14.2
Lepidoptera	4	0	0	1.3	3.6
Hymenoptera					
Formicidae	0	0	0	0.0	0.0
Parasitoids	28	44	44	38.7	56.9
Arachnida	12	4	8	8.0	10.7
TOTAL TERRESTRIAL	148	140	148	145.3	14.2
Plecoptera	0	0	0	0.0	0.0
Trichoptera	0	0	0	0.0	0.0
Diptera					
Nematocera	124	332	588	348.0	36010.7
Brachycera	28	96	48	57.3	814.2
TOTAL AQUATIC	152	428	636	405.3	39299.6
GRAND TOTAL	300	568	784	550.7	39192.9

JUN 21 1989

WA: King County Wetlands Project
Insect Emergence 1988 :
Harris Creek 13 File: 88HC13
Sept. 15- Nov. 9, 1988
No. of individuals per square meter.

TAXA	TRAP A	B	C	AVG	VAR
Collembola	4	4	16	8.0	32.0
Psocoptera	44	12	16	24.0	202.7
Thysanoptera	0	0	0	0.0	0.0
Hemiptera	4	0	0	1.3	3.6
Homoptera					
Aphidae	12	4	8	8.0	10.7
Cercopidae	4	12	20	12.0	42.7
Cicadellidae	0	4	4	2.7	3.6
Neuroptera					
Hemerobiidae	0	0	4	1.3	3.6
Coleoptera	12	0	4	5.3	24.9
Lepidoptera	8	0	8	5.3	14.2
Hymenoptera					
Formicidae	0	0	0	0.0	0.0
Parasitoids	116	20	164	100.0	3584.0
Arachnida	16	0	4	6.7	46.2
TOTAL TERRESTRIAL	220	56	248	174.7	7171.6
Plecoptera	0	0	0	0.0	0.0
Trichoptera	4	0	0	1.3	3.6
Diptera					
Nematocera	844	112	2300	1085.3	827011.6
Brachycera	86	128	300	171.3	8571.6
TOTAL AQUATIC	934	240	2600	1258.0	980754.7
GRAND TOTAL	1154	296	2848	1432.7	1124278.2

WA: King County Wetlands Project
Insect Emergence 1988 :
Jenkins Creek 28 File: 88JC28
Sept. 14- Nov. 7, 1988
No. of individuals per square meter.

TAXA	TRAP A	B	C	AVG	VAR
Collembola	4	20	24	16.0	74.7
Psocoptera	28	16	20	21.3	24.9
Thysanoptera	0	0	0	0.0	0.0
Hemiptera	0	4	0	1.3	3.6
Homoptera					
Aphidae	0	0	0	0.0	0.0
Cercopidae	0	0	0	0.0	0.0
Cicadellidae	0	0	0	0.0	0.0
Neuroptera					
Hemerobiidae	0	0	0	0.0	0.0
Coleoptera	0	0	4	1.3	3.6
Lepidoptera	0	0	0	0.0	0.0
Hymenoptera					
Formicidae	0	0	0	0.0	0.0
Parasitoids	24	8	20	17.3	46.2
Arachnida	0	0	0	0.0	0.0
TOTAL TERRESTRIAL	56	48	68	57.3	67.6
Plecoptera	0	0	0	0.0	0.0
Trichoptera	0	0	4	1.3	3.6
Diptera					
Nematocera	340	676	172	396.0	43904.0
Brachycera	72	36	32	46.7	323.6
TOTAL AQUATIC	412	712	208	444.0	42848.0
GRAND TOTAL	468	760	276	501.3	39598.2

WA: King County Wetlands Project
Insect Emergence 1988 :
Patterson Creek 12 File: 88PC12
Sept. 15- Nov. 8, 1988
No. of individuals per square meter.

TAXA	TRAP A	B	C	AVG	VAR
Collembola	208	72	124	134.7	3139.6
Psocoptera	8	4	8	6.7	3.6
Thysanoptera	0	12	28	13.3	131.6
Hemiptera	0	0	0	0.0	0.0
Homoptera					
Aphidae	8	8	44	20.0	288.0
Cercopidae	12	56	36	34.7	323.6
Cicadellidae	52	52	52	52.0	0.0
Neuroptera					
Hemerobiidae	0	0	0	0.0	0.0
Coleoptera	16	20	20	18.7	3.6
Lepidoptera	0	0	0	0.0	0.0
Hymenoptera					
Formicidae	0	0	0	0.0	0.0
Parasitoids	64	80	80	74.7	56.9
Arachnida	16	4	12	10.7	24.9
TOTAL TERRESTRIAL	384	308	404	365.3	1710.2
Plecoptera	0	0	0	0.0	0.0
Trichoptera	4	0	0	1.3	3.6
Diptera					
Nematocera	436	320	240	332.0	6474.7
Brachycera	128	132	126	128.7	6.2
TOTAL AQUATIC	568	452	366	462.0	6850.7
GRAND TOTAL	952	760	770	827.3	7787.6

MAR 21 1989

WA: King County Wetlands Project
Insect Emergence 1988 :
Lower Puget Sound 9 File: 88PS9
Sept. 14- Nov 7, 1988
No. of individuals per square meter.

TAXA	TRAP A	B	C	AVG	VAR
Collembola	68	24	56	49.3	344.9
Psocoptera	0	8	0	2.7	14.2
Thysanoptera	8	0	4	4.0	10.7
Hemiptera	0	4	4	2.7	3.6
Homoptera					
Aphidae	4388	944	736	2022.7	2804611.6
Cercopidae	16	4	0	6.7	46.2
Cicadellidae	12	4	12	9.3	14.2
Neuroptera					
Hemerobiidae	0	0	0	0.0	0.0
Coleoptera	16	40	8	21.3	184.9
Lepidoptera	0	0	0	0.0	0.0
Hymenoptera					
Formicidae	0	0	0	0.0	0.0
Parasitoids	144	68	60	90.7	1432.9
Arachnida	4	0	0	1.3	3.6
TOTAL TERRESTRIAL	4656	1096	880	2210.7	2997603.6
Plecoptera	0	0	0	0.0	0.0
Trichoptera	4	4	0	2.7	3.6
Diptera					
Nematocera	1260	1056	572	962.7	83246.2
Brachycera	484	268	256	336.0	10976.0
TOTAL AQUATIC	1748	1328	828	1301.3	141422.2
GRAND TOTAL	6404	2424	1708	3512.0	4267274.7

WA: King County Wetlands Project
Insect Emergence 1988 :
Raging River 5 File: 88RR5
Sept. 14- Nov 7, 1988
No. of individuals per square meter.

TAXA	TRAP A	B	C	AVG	VAR
Collembola	56	4	176	78.7	5187.6
Psocoptera	8	92	12	37.3	1496.9
Thysanoptera	0	20	8	9.3	67.6
Hemiptera	4	0	0	1.3	3.6
Homoptera					
Aphidae	36	16	16	22.7	88.9
Cercopidae	52	100	16	56.0	1184.0
Cicadellidae	36	48	16	33.3	174.2
Neuroptera					
Hemerobiidae	0	0	0	0.0	0.0
Coleoptera	80	300	220	200.0	8266.7
Lepidoptera	8	28	12	16.0	74.7
Hymenoptera					
Formicidae	0	0	16	5.3	56.9
Parasitoids	36	112	120	89.3	1432.9
Arachnida	0	8	20	9.3	67.6
TOTAL TERRESTRIAL	316	728	632	558.7	30979.6
Plecoptera	0	0	0	0.0	0.0
Trichoptera	4	16	4	8.0	32.0
Diptera					
Nematocera	2876	6016	4576	4489.3	1647022.2
Brachycera	192	348	168	236.0	6368.0
TOTAL AQUATIC	3072	6380	4748	4733.3	1823918.2
GRAND TOTAL	3388	7108	5380	5292.0	2310272.0

JUN 21 1989

WA: King County Wetlands Project
Insect Emergence 1988 :
East Lake Sammamish 39 File: 88LS39
Sept. 14- Nov. 8, 1988
No. of individuals per square meter.

TAXA	TRAP A	B	C	AVG	VAR
Collembola	1432	580	388	800.0	205856.0
Psocoptera	0	0	4	1.3	3.6
Thysanoptera	16	4	20	13.3	46.2
Hemiptera	0	4	0	1.3	3.6
Homoptera					
Aphidae	52	64	48	54.7	46.2
Cercopidae	8	24	36	22.7	131.6
Cicadellidae	16	4	68	29.3	771.6
Neuroptera					
Hemerobiidae	0	0	0	0.0	0.0
Coleoptera	24	0	8	10.7	99.6
Lepidoptera	0	0	0	0.0	0.0
Hymenoptera					
Formicidae	0	0	0	0.0	0.0
Parasitoids	76	132	64	90.7	878.2
Arachnida	4	28	20	17.3	99.6
TOTAL TERRESTRIAL	1628	840	656	1041.3	177731.6
Plecoptera	0	0	0	0.0	0.0
Trichoptera	0	12	4	5.3	24.9
Diptera					
Nematocera	2396	2028	2752	2392.0	87370.7
Brachycera	48	108	20	58.7	1347.6
TOTAL AQUATIC	2444	2148	2776	2456.0	65802.7
GRAND TOTAL	4072	2988	3432	3497.3	197976.9

WA: King County Wetlands Project
Insect Emergence 1988 :
East Lake Sammamish 61 File: 88LS61
Sept. 14- Nov. 8, 1988
No. of individuals per square meter.

TAXA	TRAP A	TRAP B	TRAP C	AVG	VAR
Collembola	64	108	16	62.7	1411.6
Psocoptera	28	48	104	60.0	1034.7
Thysanoptera	0	8	4	4.0	10.7
Hemiptera	8	0	0	2.7	14.2
Homoptera					
Aphidae	8	20	8	12.0	32.0
Cercopidae	16	8	20	14.7	24.9
Cicadellidae	12	4	36	17.3	184.9
Neuroptera					
Hemerobiidae	0	4	0	1.3	3.6
Coleoptera	8	304	8	106.7	19470.2
Lepidoptera	4	0	8	4.0	10.7
Hymenoptera					
Formicidae	0	0	0	0.0	0.0
Parasitoids	160	148	180	162.7	174.2
Arachnida	4	4	0	2.7	3.6
TOTAL TERRESTRIAL	312	656	384	450.7	21944.9
Plecoptera	0	0	0	0.0	0.0
Trichoptera	0	8	0	2.7	14.2
Diptera					
Nematocera	7352	18468	5424	10414.7	*********
Brachycera	672	624	856	717.3	9998.2
TOTAL AQUATIC	8024	19100	6280	11134.7	*********
GRAND TOTAL	8336	19756	6664	11585.3	*********

WA: King County Wetlands Project
Insect Emergence 1988 :
Snoqualmie River 24 File: 88SR24
Sept. 15- Nov. 9, 1988
No. of individuals per square meter.

TAXA	TRAP A	B	C	AVG	VAR
Collembola	16	8	8	10.7	14.2
Psocoptera	0	4	4	2.7	3.6
Thysanoptera	12	4	12	9.3	14.2
Hemiptera	0	0	0	0.0	0.0
Homoptera					
Aphidae	12	0	0	4.0	32.0
Cercopidae	48	20	16	28.0	202.7
Cicadellidae	40	8	32	26.7	184.9
Neuroptera					
Hemerobiidae	0	0	0	0.0	0.0
Coleoptera	4	0	0	1.3	3.6
Lepidoptera	0	0	0	0.0	0.0
Hymenoptera					
Formicidae	0	0	0	0.0	0.0
Parasitoids	44	40	36	40.0	10.7
Arachnida	4	0	0	1.3	3.6
TOTAL TERRESTRIAL	180	84	108	124.0	1664.0
Plecoptera	0	0	0	0.0	0.0
Trichoptera	4	0	0	1.3	3.6
Diptera					
Nematocera	768	272	204	414.7	63192.9
Brachycera	88	92	40	73.3	558.2
TOTAL AQUATIC	860	364	244	489.3	71096.9
GRAND TOTAL	1040	448	352	613.3	92558.2

JUN 21 1989

WA: King County Wetlands Project
Insect Emergence 1988 :
East Lake Washington 1 File: 88LW1
Sept. 15- ?Nov. 8, 1988
No. of individuals per square meter.

TAXA	TRAP A	B	C	AVG	VAR
Collembola	48	44	128	73.3	1496.9
Psocoptera	28	28	60	38.7	227.6
Thysanoptera	0	0	0	0.0	0.0
Hemiptera	0	0	0	0.0	0.0
Homoptera					
Aphidae	4	4	4	4.0	0.0
Cercopidae	8	4	8	6.7	3.6
Cicadellidae	0	12	0	4.0	32.0
Neuroptera					
Hemerobiidae	0	0	0	0.0	0.0
Coleoptera	0	0	16	5.3	56.9
Lepidoptera	0	0	0	0.0	0.0
Hymenoptera					
Formicidae	0	0	0	0.0	0.0
Parasitoids	24	44	28	32.0	74.7
Arachnida	4	8	0	4.0	10.7
TOTAL TERRESTRIAL	116	144	244	168.0	3018.7
Plecoptera	0	0	0	0.0	0.0
Trichoptera	0	0	0	0.0	0.0
Diptera					
Nematocera	100	28	96	74.7	1091.6
Brachycera	96	44	76	72.0	458.7
TOTAL AQUATIC	196	72	172	146.7	2883.6
GRAND TOTAL	312	216	416	314.7	6670.2

Appendix C2- Macroinvertebrates Taxa Erected in Wetlands and Their Habitat Affinities.

Urban Stormwater and Puget Trough Wetlands
King County (WA) Resource Planning, METRO, Univ. Washington

Comments on taxa list derived from 1987 sampling of marsh habitats. R.W. Wisseman. Aquatic Consultant.

* indicates that emergence trapping should sample these taxa quantitatively.

** indicates that emergence trapping should sample these taxa semi-quantitatively.

Insect orders listed phylogenetically. Families listed alphabetically.

INSECTA: EPHEMEROPTERA (Mayflies)

*Baetis (Baetidae): Widespread lotic taxa. However, some species have been reported from lentic habitats. Northwest taxa typically associated with lotic waters of all sizes and gradients. Probably associated with inlet/outlet channels. Herbivore and detritivore.

*Callibaetis (Baetidae): Taxa common in lentic waters.

*Timpanoga (Ephemerellidae): Previously reported from lotic habitats (pools in streams-rivers). Probably associated with inlet/outlet channels, but can't rule out association with cool-lentic waters.

*Paraleptophlebia (Leptophlebiidae): Has been associated with lotic habitats. Probably associated with inlet/outlet channels. Detritivores.

*Heptageniidae: Most genera associated with lotic habitats. Northwest taxa are typically lotic water inhabitants. Probably associated with inlet/outlet channels.

*Siphlonurus (Siphlonuridae): Typically associated with lentic habitats. Omnivore. May be found in permanent or temporary waters.

INSECTA: ODONATA; ANISOPTERA (Dragonflies)

**Aeshnidae: Common taxa of permanent lentic habitats. Larvae usually associated with submerged or emergent vegetation. Larvae and adults are predators. Adults can disperse over large areas. Presence of adults does not always indicate presence of larval habitats.

**Gomphidae: Northwest taxa typically associated with lotic habitats. Found in detritus in pools of low to moderate gradient streams. Predators (larvae and adults). Adults

will disperse over long distances, and are not always associated with larval habitats. Larvae probably associated with inlet/outlet channels.

**Libellulidae: As with Aeshnidae.

INSECTA: ODONATA; ZYGOPTERA (Damselflies)

**Coenagrionidae: Larvae typically associated with permanent lentic habitats. Adults usually remain near the larval habitats. Larvae and adults are predators. Damselflies are smaller than the dragonflies, and should be sampled more effectively by emergence trapping. Emerging adults require terrestrial substrates to crawl out onto. This can be provided by the trap rim, emergent vegetation under the trap, or floating debris.

**Lestidae: As with Coenagrionidae.

INSECTA: PLECOPTERA (Stoneflies)

*Nemouridae: Taxa associated with a wide variety of lentic and lotic habitats. Most genera and species associated with lotic habitats, however, some Northwest taxa associated with temporary waters. May not be exclusively associated with inlet/outlet channels. Need specific identification. Detritivores.

*<u>Isoperla</u> (Perlodidae): Inhabits lotic waters. Probably associated with inlet/outlet channels. Predator.

INSECTA: HEMIPTERA (True bugs)

Belastomatidae (giant water bugs): Permanent lentic waters (marsh, pond). Adults and larvae are aquatic. Predators. Not sampled by emergence cages. Probably in low abundance.

Corixidae (water boatman): Larvae and adults are aquatic (lentic-marsh, pond, lake-littoral). Adults can fly to disperse between habitats. May be caught incidentally in emergence traps, but not quantitatively.

Gerridae (waters striders): Larvae and adults are aquatic (surface film). Lentic and lotic (pools). Predators. Some adults capable of flight. May be incidentally caught in emergence traps, but not quantitatively.

Lygaeidae: Terrestrial. Associated with plants (?with emergent macrophytes).

*Anabolia (Linephilidae): Associated with cool-lentic waters. Northern-transcontinental. Detritivore-omnivore.

*Dicosmoecus (Limnephilidae): Usually associated with lotic waters. Two Northwest species. One species does occur in cool-lentic habitats (omnivore), the other species is strictly confined to lotic waters (herbivore-scraper). Probably associated with inlet/oulet channels.

*Limnephilus (Limnephildae): Common lentic taxa. Detritivore-omnivore.

*Psychoglypha (Limnephilidae): Most taxa associated with lotic habitats, although several Northwest species are also found in cool-lentic waters. Omnivore.

*Banksiola (Phryganeidae): Associated with cool-lentic waters. Northern-transcontinental. Omnivore.

*Polycentropodidae: May be associated with lotic and lentic habitats. Some Northwest species found in both. Predators.

*Rhyacophila (Rhyacophilidae): A lotic taxa. Probably associated with inlet/outlet channels. Predator.

INSECTA: LEPIDOPTERA (MOTHS)

Geometridae: Terrestrial.

INSECTA: COLEOPTERA (Beetles): Adults of aquatic taxa may be incidentally caught in emergence traps, but not quantitatively.

Chrysomelidae: Terrestrial.

Coccinellidae: Terrestrial.

Curculionidae: Some semi-aquatic taxa. Need genus and/or species determination.

Dytiscidae: Adults and larvae are aquatic. Lentic and lotic (pools). Adults and larvae usually associated with macrophytes.

Gyrinidae: Adults and larvae are aquatic. Lentic or lotic (pools). Adults associated with the surface film. Larvae usually associatied with macrophytes. Predators.

Haliplidae: Adults and larvae are aquatic. Lentic. Adults gene'ally associated with emergent vegetation. Herbivores.

Hydrophilidae: Adults and larvae are aquatic. Lentic. Predators.

Staphylinidae: Some semi-aquatic taxa. Need genus or species determination.

INSECTA: DIPTERA (Flies) : The flies will dominate the emergence trap collections, and are probably the most numerically dominant group to be found in most marsh habitats. Some of the families identified below have larval stages mostly confined to aquatic habitats. Some families have aqautic and semi-aquatic larval forms, while some are pretty much confined to semi-aquatic habitats (e.g. moist organic matter). All will be sampled effectively by the emergence traps.

*Anthomyiidae: see Muscidae.

*Ceratopogonidae: Aquatic. Lotic and lentic.

*Chaoboridae: Aquatic. Lentic. Probably in deeper marshes only.

*Chironomidae: Aquatic. Usually a dominant and diverse component of lotic and lentic systems. Extensive literature on usefulness for comparisons of environmental/habitat conditions (although the Northwest fauna is not well known in this regard).

*Culicidae: Aquatic. Lentic. Taxa are generally habitat specific.

*Dixidae: Aquatic. Margins and surface. Lotic and lentic.

*Dolichopodidae: Terrestrial, semi-aquatic, and aquatic. Need generic I.D. Often in detritus (submerged or moust).

*Empididae: Probably aquatic or semi-aquatic. Need generic I.D.

Ephydridae: Aquatic or semi-aquatic. Generally associated with lentic-margins and macrophytes. Need generic I.D.

Lonchopteridae: Terrestrial or ?semi-aquatic. Larvae generally associated with moist detritus.

Muscidae: Terrestrial, semi-aquatic and aquatic. Need generic I.D.

Mycetophilidae: Probably associated with damp detritus on margins.

Sciaridae: Probably associated with damp detritus on margins.

Stratiomyiidae: Aquatic, lentic, littoral or margin.

Syrphidae: Need generic I.D. Terrestrial, semi-aquatic and aquatic taxa.

Tabanidae: Terrestrial, semi-aquatic and aquatic taxa. Need generic I.D. Probably associated with moist detritus.

Tipulidae: same.

INSECTA: HYMENOPTERA

Braconidae: Terrestrial parasitoid.

Formicidae: Terrestrial-ants.

Ichneumonidae: Terrestrial parasitoid.

Tenthredinidae: Terrestrial-sawflies.

ARACHNIDA (Spiders): Terrestrial or semi-aquatic (e.g on margins or run across water surface). Predators.

CRUSTACEA: None of the Crustacea will be sampled by the emergence traps. Are they common or abundant in many marshes? If they are, are they patchily distributed? Could use benthos samples to census.

Daphnidae (Cladocera): Probably only the largest individuals retained by the dipnet.

Asellidae (Isopoda): Need specific I.D.

Gammaridae (Amphipoda): Need specific I.D.

Hyalellidae (Amphipoda): Probably <u>Hyallela azteca</u>, a widely distributed lentic taxa.

MOLLUSCA: All of the families identified occur in lentic waters. Many also occur in lotic waters. Need generic or specific determinations to predict habitat association. Will not be sampled by emergence trapping. May be common or abundant taxa in some marshes/habitats. ?? auxiliary sampling by benthos collections.

Ancylidae (Gastropoda):

Lymnaeidae (Gastropoda):

Physidae (Gastropoda):

Planorbidae (Gastropoda):

Sphaeriidae (Pelecypoda):

TURBELLARIA: Tricladia; Planariidae: Flatworms. Aquatic. Will not be sampled by emergence traps.

HIRUDINEA: Leeches. Will not be sampled by emergence traps.

OLIGOCHAETA: Lumbriculidae: Aquatic earthworms. Will not be sampled by emergence cages.

Appendix C3- Adapted Bird Protocols for 1989

1. All points are marked at the wetlands, due to travel and terrain conditions it is not possible to arrive at all points unseen; sometimes the flag-marked path follows the wetland edge.

2. This is followed. All wetlands have a complete or near complete coverage.

3. This is done with special attention given to the birds in the wetland. In some cases, like at LPS9, birds which are obviously not associated with the wetland, like starlings and house sparrows near the parking lot and buildings near station 6, are ignored.

4. Our system presently includes the recording of the following (also listed on the data sheet):

* Non-territorial call
* Territorial song
* Pecking or drumming
* Visual
* Flyovers either:
  - associated with the wetland
  - not associated with the wetland

  This last point is subjective but includes: level of flight, whether or not the bird lands in the wetland, or flight behavior, such as circling.

There is a space for notes on the data sheet, but any notation of nesting behavior outside of territorial song is not entered into the computer.

5. We census early in the morning. You know the census periods, to reiterate:

winter= mid-January;
spring1= last week of March, first of April;
spring2= last of May first of June;
fall= mid November.

The summer census and not the winter census was dropped because it was felt that the birds recorded in the second spring census adequately represented the birds found in the summer. Winter census not only includes year-round residents but wintering migrants. This decision was made by Mike Emmers and JIm Shields, I don't know how Gordon would

feel about it. I think that visiting winter birds are an important and distinct component of this area's avifauna, especially in wetlands.

6. As in number 3. a complete or near complete census is available for all wetlands. Dr. Conquest and I are investigation "bird specific" circular plot analysis techniques.

7. Self evident.

8. We census Forbes Creek in this manner, but with 4 stations, this number adequately represents the site without too much of an overlap problem.
At this site only the ducks within 10 meters of the bridge at the final station are recorded. The ducks, cormorants, gulls etc. associated with the lake are ignored except when flying over, or using the wetland.

-At all sites both the distance to and direction (in eighths of a circle; i.e. N, NE, E, SE..) of each bird sighting or sounding is recorded.
-The time on the sheets represents only the start of the 15 minute period at each station.
-Each site is visited four times by different individuals during each sample period. This allows for a minimum of replication so that some statistics can be used.
-Temperature and weather are recorded for each site, using a thermometer and a 4 point scale, respectively. The four point scale: 0=snow; 1=rain; 2=overcast; 3=partly cloudy; 4=sunny, clear.

Also attached is an Invertebrate sampling data sheet.

Appendix C4- A Proposed Methodology for Monitoring Mammalian Herpetofaunal Populations in King County Wetlands

A PROPOSED METHODOLOGY FOR MONITORING MAMMALIAN AND HERPETOFAUNAL POPULATIONS IN KING COUNTY WETLANDS

By

Stephen D. West, Ph.D.
Animal Ecology & Environmental Science

For: Puget Sound Wetlands and Stormwater Management Research Program

King County
Natural Resources and Parks Division
Parks, Planning and Resources Department
707 Smith Tower Building
506 Second Ave.
Seattle, WA 98104

MONITORING MAMMALIAN AND HERPETOFAUNAL POPULATIONS

Introduction

This study plan outlines an approach for monitoring populations of mammals, amphibians, and reptiles to determine the effects of stormwater retention in selected King County wetlands. The first year of monitoring will establish baseline data for all studied wetlands. In subsequent years half of the wetlands will be used to retain stormwater, and differences between treated and untreated wetlands in indices of relative abundance for these taxa will be investigated.

Because the reptilian fauna of western Washington is relatively depauperate, I expect to deal primarily with the mammals and amphibians. Accordingly, the sampling techniques proposed target these groups for maximum efficiency within the constraints of the Puget Sound Wetlands and Stormwater Management Research Program.

General Approach

A key consideration bearing on the success of this effort is the appropriate pairing of wetlands. It is of course critical that the pairs be similar in general attributes such that the assumption of a roughly equal resource milieu before treatment can be made for these taxa. It is also critical, because historical factors probably are important in determining the composition of these wetland faunas, to compare wetlands that share the same taxa. For this reason, the first year of the study will be needed to identify appropriate pairings. Some wetlands, which might be used for monitoring other environmental parameters, may not be of much use for the vertebrate comparisons. The site selection process should proceed in two parts: an initial selection of 16 wetlands (eight pairs) will be made based upon minimizing logistical difficulties, and if necessary after analyzing the data for these pairs, an additional sampling and replacement of ill-matched pairs will be done with one or both of the remaining wetland pairs. Because of substantial time requirements for sampling, it seems appropriate to sample a subset of the 20 wetlands selected by the program for study.

Both of these vertebrate taxa are subject to large intersample variation. Some mammalian species undergo large annual or multiannual fluctuations in population size, and all amphibians have seasonal activity peaks outside of which they may be rarely seen. It is therefore necessary to sample the wetland pairs simultaneously in appropriate times of the year.

Mammals generally have population minima in the spring with maxima after the breeding season in late summer or early fall. Mammal populations

tend to persist in the best habitats through winter and go locally extinct in poor habitats. For this reason, spring census data are valuable in identifying "survival" habitats, or high quality habitats. At the same time, because populations are small in spring, adequate sample sizes can be hard to obtain. On the other hand, fall populations may be relatively large and easily sampled, but habitat affinities may be diffuse, as habitats of high and low quality may be occupied. At a minimum, mammals should be censused in the spring and fall to encompass such seasonal dynamics.

The dynamics of amphibian populations are poorly known. It is clear, however, that they must be sampled in the spring and fall. During mid-summer and winter many amphibians retreat to inaccessible locations, i.e., rodent burrows, mud, large logs, and rock crevices, where they cannot be censused. In spring, many are actively breeding, and often are present in good numbers. In the fall, at least a week after the first substantial rain, many amphibians are surface-active until cold weather arrives. Before the fall rains, amphibian sampling is a waste of time.

For these reasons, the spring and fall are the seasons of choice for censusing. The need for precise timing of sampling is less critical for mammals than amphibians. Within the spring and fall seasons, sampling should be contingent upon amphibian surface activity. The timing of sampling in a given year also must be sensitive to current phenology. In years with late springs, samples must be taken later; in years with late fall rains, samples must also be delayed.

Methodology

Four people will sample four wetlands in the spring and fall of each year. Wetlands should be grouped to minimize travel time. Paired wetlands should be sampled simultaneously, and all sampling should be concluded within a two week period. All four wetlands should be sampled simultaneously.

Spring sampling should begin whenever amphibian surface activity is clearly underway (sometime in March-April). This can be assessed with periodic observations made during other aspects of the program. Fall sampling should begin a week or so after the first drenching fall rains (usually early October), when amphibian activity is noticeable.

To acquire information on as many mammalian species as possible, the techniques described below focus upon species of small body size. Censusing large, mobile animals that are infrequently encountered is expensive both in terms of equipment and time. Further, their distributions are sensitive to a range of uncontrolled conditions outside wetland boundaries. Small mammals are often present in sufficient numbers for statistical treatment, are tied closely to local environmental conditions, and reflect changes in their environments on a shorter time scale than do large

mammals. This sampling protocol for mammals focuses upon Insectivores and rodents (Table 1).

A constraint of the program is the desire to use live-capture techniques for assessing species abundance. This is a problem because capture efficiencies for livetrapping methods are roughly three times less efficient for mammals than collecting methods. In an attempt to ameliorate the consequences of this constraint, I propose to use pitfall traps, which are efficient at capturing amphibians and certain small mammals, in capture-release fashion. Pitfall traps are used primarily as a removal technique, but can function as a livetrap if checked frequently enough. The pitfall traps will be augmented with Sherman livetraps to capture those small mammal species that either do not enter pitfall traps, or escape from them readily.

Pitfall Trapping

In each wetland, 20 pitfall traps (Figure 1) will be installed along two transects of 10 traps each. The beginning and end of each transect should be permanently marked with a 1m length of aluminum conduit. There should be 10m between flagged, trap stations. Traps should be placed within 2m of the station flag in places likely to catch something, i.e., next to logs and dense vegetation or in established rodent runways. Field personnel will be instructed on the finer points of trap placement before sampling begins. Traps are constructed of two No. 10 tin cans (3 lb coffee cans) joined together at the flared ends with duct tape. The bottom of the upper trap must be removed. This arrangement results in a trap about 6 inches in diameter and 14 inches in height. Post-hole diggers are used to excavate the hole for the traps, which are then buried with the upper edge flush with the ground surface. Plastic collars (margarine tub with bottom removed) are placed inside the can to prohibit amphibians from crawling out of the trap. Half a roofing shingle is placed over the trap to keep out rain and debris. When not in use, the traps are closed with a tight-fitting plastic lid. Barring human disturbance, the traps will last the length of the program (at least 5 years), and need be installed only once.

Because the smaller shrews will die without food every 4 hours or so, it will be necessary to provide food in the pitfall and livetraps. Each trap will need a half ounce or so of suet. A piece of polyester fiber placed in each trap will also help avoid hypothermia. Animals found dead in the traps should be placed in zip-lock plastic sandwich bags with capture information: name of collector, date, location, and frozen as soon as possible.

Pitfall traps will be operated continuously for 2 weeks, and will be checked every morning and evening. Captured animals will be identified to species (Figure 2), marked as to capture status, and released. It is unnecessary to individually mark captured animals. Because we will need to know only the total number of animals captured, marks can be temporary and

non-traumatic. Mammals can be marked by clipping the tail pencil (terminal hairs) or a patch of dorsal pelage, and amphibians can be marked by clipping the tip of a toe or tail.

Sherman Livetrapping

Large-sized Sherman livetraps will be used to sample the larger or more agile small mammals. Two transects each consisting of 25 trapping stations separated by 10m will be used. One trap will be placed within a meter of the trapping stations, again, where they will catch something. Each trap will be baited with rolled oats and suet, and polyester fiber will be used as described above. Sunboards will be used to shade the traps and protect them from rain.

Placement of the Sherman transects and the pitfall transects will be a field decision. It is desirable that the transects cover the major habitats in each wetland, and it is especially important that similar habitats be sampled for each pair of wetlands. The simplest arrangement might be to alternate Sherman and pitfall transects around the periphery of the wetland. As much mammalian activity centers on the water-land interface, it is preferable to locate the transects as close to the water as possible.

The Sherman traps will be operated for two periods of three continuous days. As each field person will operate 100 traps alternately between two wetland pairs, a total of 400 traps will be needed to sample all 16 wetlands:

	Day	1	2	3	4	5	6	7	8	9	10	11	12	13	14	15
Pair 1	Site A	T	T	T						T	T	T				
	Site B	T	T	T						T	T	T				
Pair 2	Site A					T	T	T						T	T	T
	Site B					T	T	T						T	T	T

Although three days of trapping are indicated above, it will be necessary to pick up the traps from one wetland and set them at another during the "free" day. Recall that all pitfall traps are in operation for 14 days of this period.

Data Analyses

Both trapping techniques will yield catch per unit effort data. With sufficient captures, such data can be compared with respect to treatment using either two-way ANOVA or paired t-tests if capture data can be

transformed appropriately, or with Wilcoxon's Signed Ranks test if they cannot. It will be difficult to identify subtle differences due to treatment if the nonparametric test must be used, as a minimum of six pairs, all of like sign, are required for significance. Should four paired sites differ in initial species composition and need replacement, we would be at this minimum number of pairs.

Because some species will be infrequently caught, statistical inference will not be possible for all species. It should be possible, however, to use these data to calculate species number and follow its response to treatment.

Logistical Requirements

Requirements are estimated for each iteration of the trapping protocol. A minimum annual cost, resulting from a fall and spring sampling schedule, would be about twice that indicated. Material costs after the first year are negligible, most of the expense resulting from personnel.

Personnel	Time/Cost
Fieldworkers (4)	
Transect establishment (first year)	1 day/person
Pitfall installation (first year)	3 days/person
Pitfall and Sherman trap checks	14 days/person
Data Analyst (1)	
Data editing and compilation	2 days
Computer data entry	1 day
Supervisor (1)	
Fieldwork supervision	2 days
Design of data forms (primarily first year)	1 day
Report writing	3-4 days
Travel	
Supervisor	
Instructional field visit (as required)	$20 (?)
Site visits as required (4 minimum)	$50 (?)
Fieldworkers	
Transect establishment: two trips/site	$ (?)
Checking: two trips/site each day for 14 days	$ (?)

Equipment and Supplies

Pitfall traps	
640 No. 10 tin cans for 320 traps (first year)	$100 (?)
duct tape (first year)	$20
plastic collars with lids (first year)	$50 (?)
320 roofing shakes or boards (first year)	$20 (?)
rolled oats, suet	$20
polyester fiber	$10
ziplock sandwich bags	$5
plastic flagging	$20
[1]metric measuring tape	no charge
64 transect markers (1m aluminum conduit)	$55
[1]posthole diggers	no charge
Sherman trapping	
[1]400 large, folding aluminum traps	no charge
[1]400 masonite sunboards	no charge
rolled oats, suet	charged above
plastic flagging	charged above
polyester fiber	charged above
ziplock sandwich bags	charged above
[1]metric measuring tape	no charge
64 transect markers	$55
Data forms	
Provided by supervisor on waterproof paper	$20

[1]Available from the University of Washington with the understanding that the project will replace any lost or destroyed equipment with new equipment.

Table 1. Small mammals potentially occurring in the wetlands of western King, Snohomish, and Pierce Counties, Washington.

Insectivora		Common	Rare
Sorex cinereus	masked shrew		X
Sorex vagrans	vagrant shrew	X	
Sorex monticolus	montane shrew	X	
Sorex palustris	water shrew		X
Sorex bendirii	Pacific water shrew	X	
Sorex trowbridgii	Trowbridge's shrew	X	
Neurotrichus gibbsii	shrew-mole	X	
Scapanus townsendii	Townsend's mole	X	
Scapanus orarius	coast mole	X	
Rodentia			
Tamias townsendii	Townsend's chipmunk	X	
Tamiascirurus douglasii	Douglas' squirrel	X	
Glaucomys sabrinus	northern flying squirrel	X	
Peromyscus maniculatus	deermouse	X	
Peromyscus oreas	forest deermouse	X	
Neotoma cinerea	bushy-tailed woodrat		X
Clethrionomys gapperi	southern red-backed vole	X	
Microtus longicaudus	long-tailed vole		X
Microtus oregoni	creeping vole	X	
Zapus trinotatus	Pacific jumping mouse	X	
Carnivora			
Mustela erminea	ermine	X	
Mustela frenata	long-tailed weasel	X	

Appendix D- Project Publications

Cooke, S. S., R. R. Horner, C. Conolly, O. Edwards, M. Wilkinson and M. Emers. 1989. Effects of urban stormwater runoff on palustrine wetland vegetation communities - baseline investigation (1988). A report to U.S. Environmental Protection Agency, Region 10, by King County Resource Planning, Seattle, Wa. Feb. 1989.

Horner, R. R. In Press. Long-term effects of urban stormwater on wetlands. Proc. Engineering Foundation Conference on Urban Runoff, Potosi, MO, July 1988.

Horner, R. R., F. B. Gutermuth, L. L. Conquest, and A. W. Johnson. 1988. Urban Stormwater and Puget Trough wetlands. Proc. First Annual Meeting On Puget Sound Research, Seattle, WA, March 1988, pp. 723-746.

Municipality of Metropolitan Seattle. 1988. Wetlands study focuses on urban dangers. Metro Monitor, December 1988, Municipality of Metropolitan Seattle, Seattle, WA.

Stockdale, E. C. 1986a. The use of wetlands for stormwater management and nonpoint pollution control: a review of the literature. Washington Department of Ecology, Olympia, WA.

Stockdale, E. C. 1986b. Viability of freshwater wetlands for urban surface water management and nonpoint pollution control: an annotated bibliography. Washington Department of Ecology, Olympia, WA.

Stockdale, E. C. and R. R. Horner. 1987. Prospects for wetlands use in stormwater management. Proc. Coastal Zone '87, Seattle, WA, May 1987.

Stockdale, E. C. and R. R. Horner, 1988. Using freshwater wetlands for stormwater management: a progress report. Proc. Wetlands '88: Urban Wetlands and Riparian Habitat Symposium, Oakland, CA, June 1988.

NOAA COASTAL SERVICES CENTER LIBRARY
3 6668 14107 5129