NOAA Technical Memorandum NWS SR-181

RADIOSONDE CLIMATOLOGY OF WEST-CENTRAL FLORIDA

Charles H. Paxton
Rocco D. Pelatti
M. Elaine Powell

National Weather Service Office
Tampa Bay Area, Florida

Scientific Services Division
Southern Region
Fort Worth, TX

December 1996

UNITED STATES
DEPARTMENT OF COMMERCE
Michael Kantor, Secretary

National Oceanic and Atmospheric Administration
Diana H. Josephson
Deputy Under Secretary

National Weather Service
Elbert W. Friday
Assistant Administrator

RADIOSONDE CLIMATOLOGY OF WEST CENTRAL FLORIDA

1. Abstract

Radiosonde parameters were assembled into a 36-year climatology. Monthly minima, maxima and averages of height, temperature, dewpoint, relative humidity, wind direction and wind speed were computed from 1200 UTC soundings. Average Skew T diagrams and stability indices were derived from the data. Tables of results are included in the Appendices.

2. Introduction

Radiosonde data from the Tampa Bay area from 1958 to 1992 comprising height, temperature, dewpoint, wind direction, and wind speed were used for this atmospheric climatology. Maximum, minimum, averages and wind direction frequencies were calculated for mandatory levels of 1000, 850, 700, 500, 400, 300, 250, 200, 150, and 100 mb. Average relative humidities were calculated from average temperature and dewpoint. For consistency and to eliminate contamination from afternoon thunderstorm activity, only 1200 UTC soundings were used. The soundings were obtained from the *Radiosonde Data of North America* CD-ROM (1993). Tables and graphs were computed using Quattro Pro spreadsheets. The radiosonde site originally at the Tampa International Airport was moved on June 1, 1975, to a new National Weather Service office in Ruskin about 17 nm south southeast of the airport.

In a 25-year upper air climatology for Cape Canaveral, Hagemeyer and Schmocker (1991) computed and processed data into graphs. Profiles of mean annual temperature and dewpoint, potential temperature, wet-bulb potential temperature, and mean wind U and V wind components were computed. Temperature, dew point, and pressure data were converted to potential temperature and wet bulb potential temperature so that information concerning moist and dry static stability could be evaluated directly from the monthly graphs. In contrast, this study uses conventional parameters from soundings so direct comparisons to current and forecast sounding data can be made by forecasters. Average Skew T diagrams and stability indices were produced from the compiled average data.

3. Data

a. Geopotential Height

Average geopotential heights (Fig.1) show only minor variations annually. Average heights are lowest during the cool month of February above 1000 mb. In a climatology of the upper troposphere, Sadler (1975) documented subtropical ridge migration from the Caribbean Sea through Mexico into the southern United States during summer. This results in height field bulges during warmer summer months, with average heights highest in July or August above 1000 mb.

b. Temperature

Average temperatures (Fig. 2) vary most in the lower levels. Cold fronts and associated upper-level systems pass through central Florida regularly from fall through spring. Fronts rarely move into central Florida during summer; therefore, temperatures show the least variability

during summer. The temperature field exhibits cooler winter and warmer summer temperatures up to 200 mb. Higher in the atmosphere, the opposite is true. The lower winter tropopause results in warmer temperatures above 200 mb. Warmer temperatures occur at 150 mb during winter, with an average of -62.1 C in February, and cooler temperatures occur during the summer with an average -66.5 C in July. At 200 mb average temperatures vary by only by 1.8 C.

c. Dewpoint

Maximum dewpoints occur during August from 1000 mb to 300 mb. Minimum dewpoints occur during the colder winter months of January and February. At 1000 mb, average dewpoints undergo a gradual increase, while the minimum dewpoint readings have a significant increase into the summer months. At 850 mb, average dewpoints have sharp transitions more than 8.0 C from April through June and from September through November. These are periods when frontal activity transitions from frequent winter passages to nearly none during summer. Average annual dewpoint variability decreases with height from a range of 13.2 C at 1000 mb to 4.4 C at 300 mb.

d. Relative Humidity

Monthly average relative humidity was calculated from average temperature and dewpoint for levels up to 300 mb. An increase in moisture and instability leads to almost daily thunderstorms over Florida during summer. This moisture increase is reflected in Fig. 3. Relative humidity decreases from around 80 percent at 1000 mb to around 30 percent at 400 mb and 300 mb. At 1000 mb through 400 mb, relative humidity is highest during the summer; but at 300 mb, relative humidity is slightly higher during the winter. The soundings used in this climatology were taken during the morning around sunrise (1200 UTC); therefore, less annual variation in relative humidity is noted at 1000 mb.

e. Wind Speed

Figure 4 illustrates the transition of middle and upper atmospheric winds from winter to summer. Comparing wind speed with geopotential height and temperature, migration of the subtropical and polar jet streams may be inferred. During winter months, geopotential height values and the stratosphere lower, while upper-level westerly winds increase considerably. The opposite is true during the summer months of July and August when the polar jet stream is over northern latitudes and the subtropical ridge extends across Florida. This leads to a pronounced decrease in upper level winds and more directional variability. Wind speeds increase with height up to 200 mb then decrease at 150 and 100 mb. All levels have winter maxima and summer minima.

f. Wind Direction

Individual wind directions were related to eight compass points. For example, all directions within 12.5° of 270° (west) were assigned as westerly winds. In the lowest levels, wind direction is much more variable during winter, but in middle levels wind direction is more variable during summer. During winter (Figs. 5a-c), westerly 1000 mb winds are least common, but at 850 mb and above, west winds occur most frequently. At 200 mb, winter wind directions

show a consistent westerly flow associated with the subtropical jet stream. During spring and fall, winds aloft become more variable in direction, while lower level winds are primarily from the northeast and southeast quadrants. During summer (Figs. 5d-f), southeast winds are most common in the lower levels. Winds are evenly distributed at 500 mb, and the mean subtropical ridge position produces northeast to east winds above 500 mb during summer.

g. Average Skew T Diagrams

Average monthly Skew T diagrams and derived parameters (Figs. 6a-l) were produced from the SHARP - Skew T/Hodograph Analysis and Research Program (Hart and Korotky, 1991). Average 1200 UTC mandatory level temperature, wind, and dewpoint data were plotted from 1000 mb to 100 mb. Since surface data are excluded, low level inversions typically on 1200 UTC soundings are not present. Several stability indices were calculated. Convective available potential energy (CAPE) was calculated using the PMAX method that uses the most unstable parcel in the lowest 150 mb. CAPE values of zero and lifted indices between 7 and 12 are observed during the fall and winter. CAPE values above zero and negative lifted indices, occur during late spring and summer. A maximum average CAPE value of 1603 Jkg^{-1} and -4C lifted index occurs during August when warm, moist, conditionally unstable air is most prevalent. Calculated precipitable water values range from a relatively dry 0.71 inches during February to a peak value of 1.66 inches during August.

4. Conclusion

This data set provides insight into the typical atmosphere over west-central Florida. Skew T diagrams and tables of maxima, minima, and averages will allow forecasters to assess atmospheric deviations from the average. This may be helpful for forecasting atypical events. The data provide a baseline and may also be used to determine maximum and minimum record events in the atmosphere.

5. Acknowledgments

Hearty thanks to the WSO Tampa Bay staff who provided important front line ideas. Also thanks to NWS Southern Region SSD and to the NWS Office of Meteorology for partial funding of work done on this paper.

6. References

Hagemeyer, B. C. and G. K. Schmocker, 1991: Mean Atmosphere over Cape Canaveral. *NOAA Tech. Attach.* SR/SSD 91-11, 7p.

Hart, J. A. and W. D. Korotky, 1991: The SHARP Workstation - v1.50. A Skew T/Hodograph Analysis and Research Program for the IBM and Compatible PC. Users Manual. NOAA/NWS Forecast Office, Charleston WV., 62 pp.

Forecast Systems Laboratory, Boulder, Colorado, National Climatic Data Center, Asheville, North Carolina, 1993: Radiosonde Data of North America 1946-1992. Version 1.0, CD disc 1-4.

Sadler, J. C., 1975: The upper Tropospheric Circulation over the Global Tropics. Dept of Meteorology, University of Hawaii, Rep. No. UHMET-75-05, 35 pp.

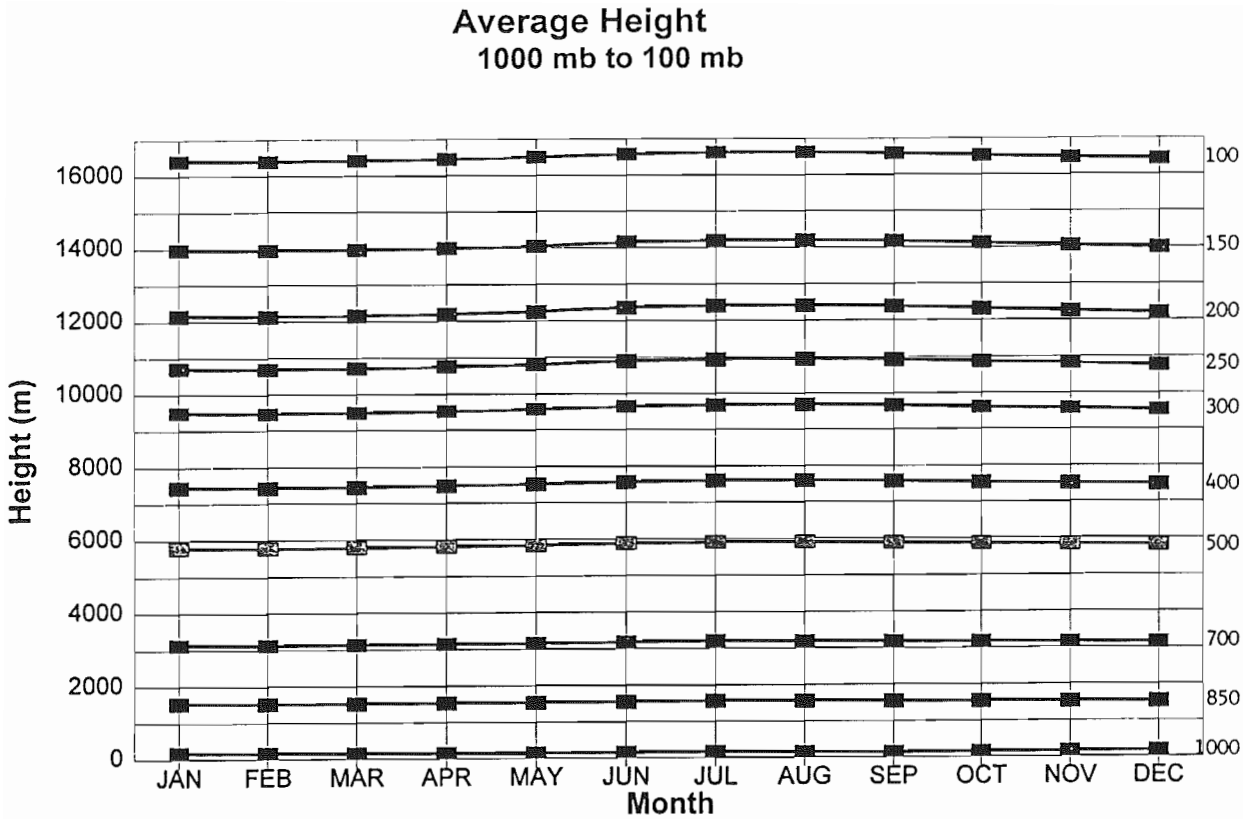

Figure 1. Average Height

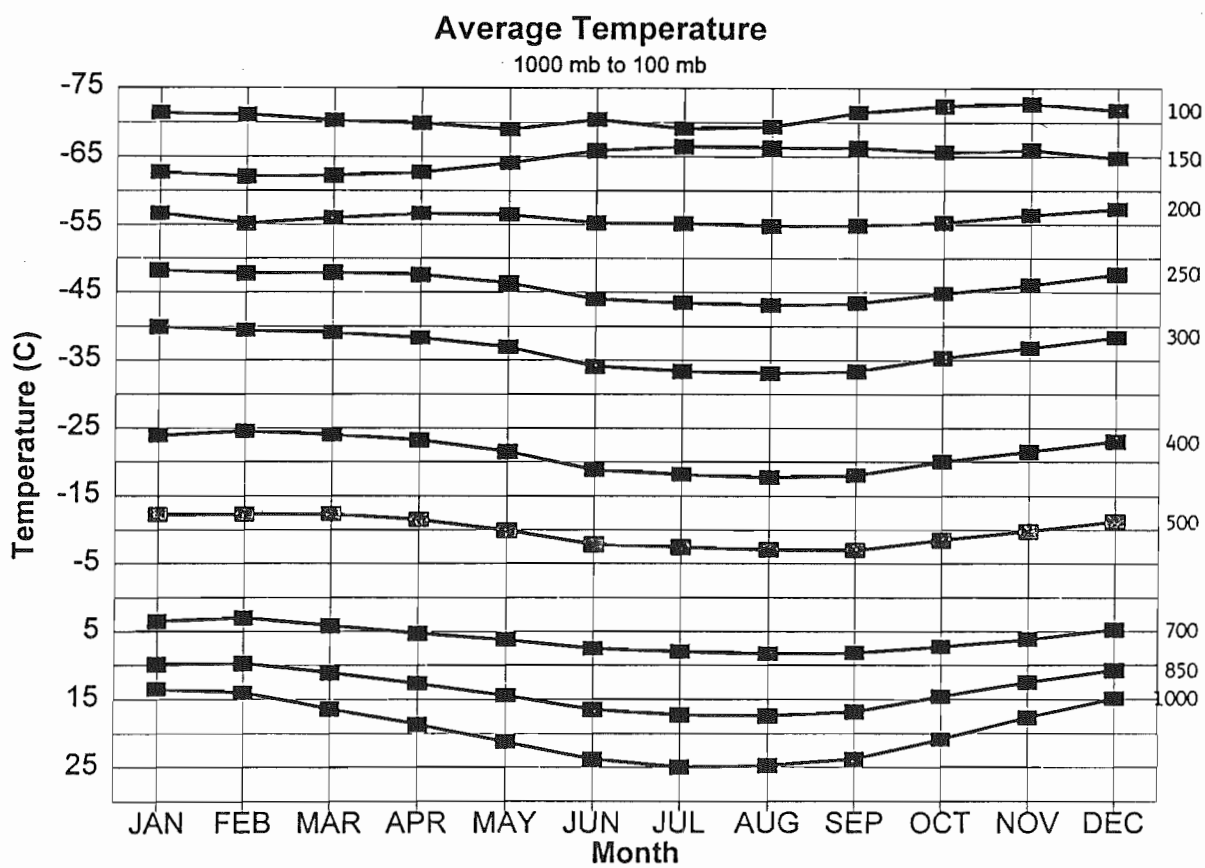

Figure 2. Average Temperature

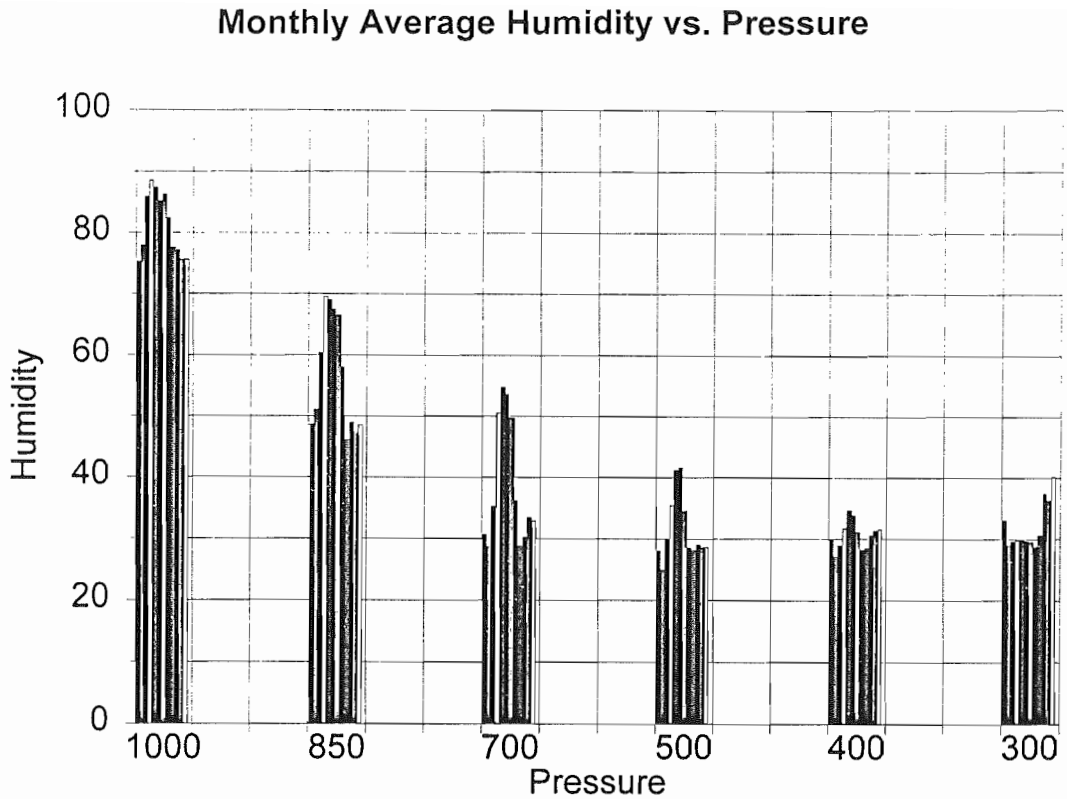

Figure 3. Monthly Average Humidity

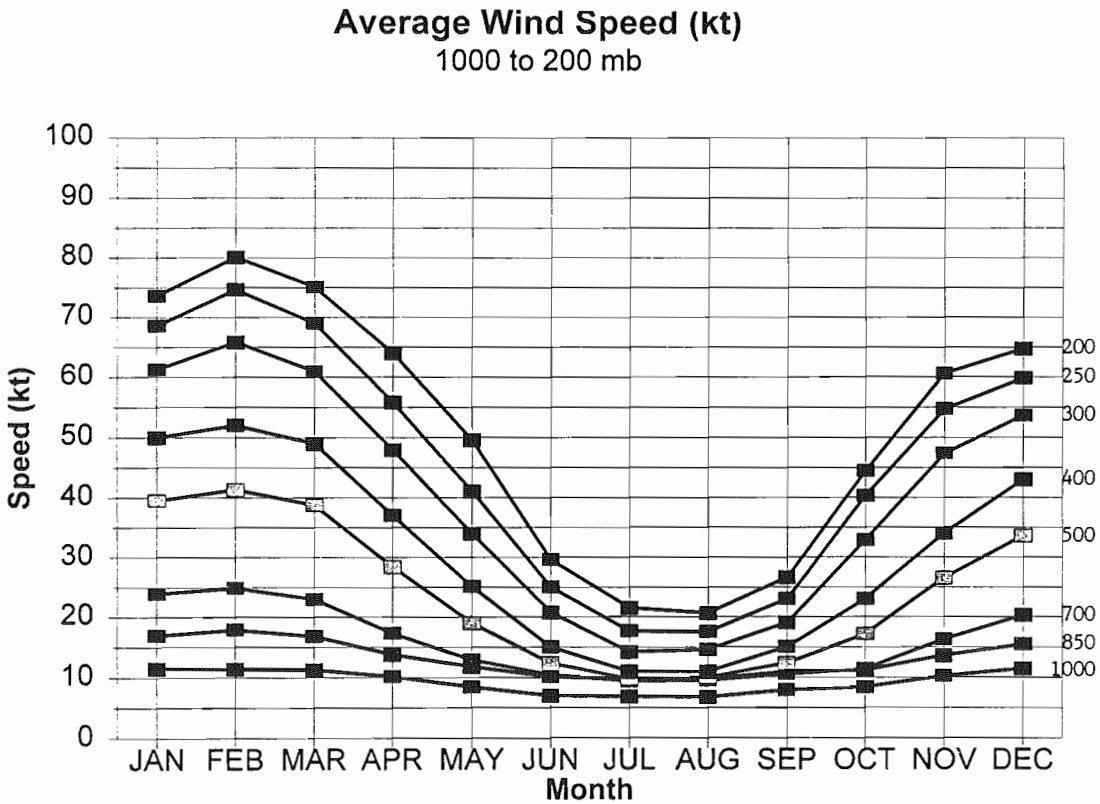

Figure 4. Average Wind Speed

a. January Wind Direction Frequency (%)
200 mb

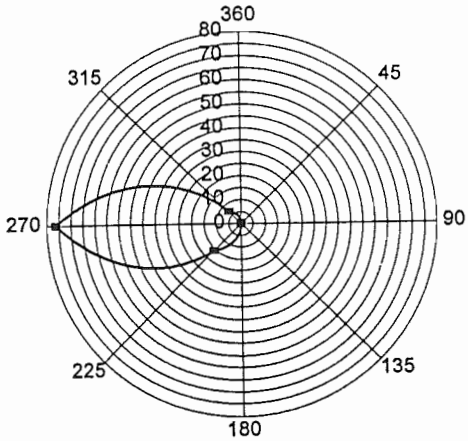

b. July Wind Direction Frequency (%)
200 mb

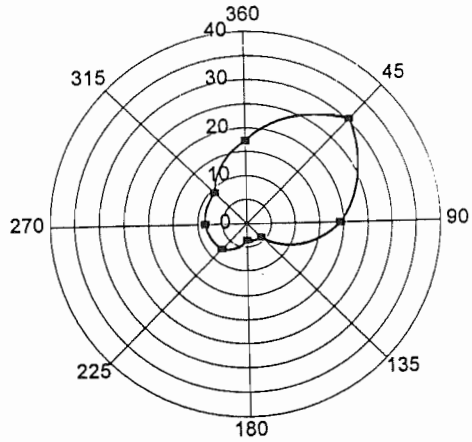

c. January Wind Direction Frequency (%)
500 mb

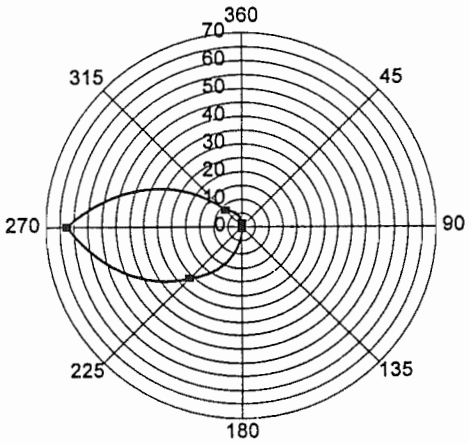

d. July Wind Direction Frequency (%)
500 mb

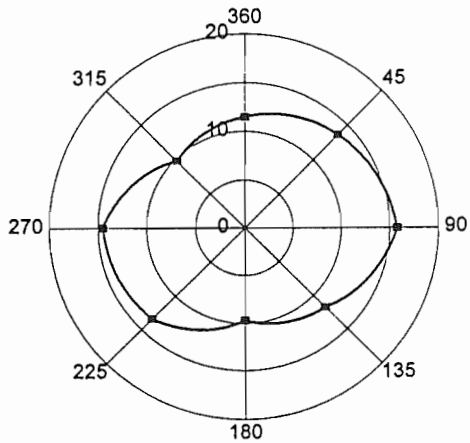

e. January Wind Direction Frequency (%)
1000 mb

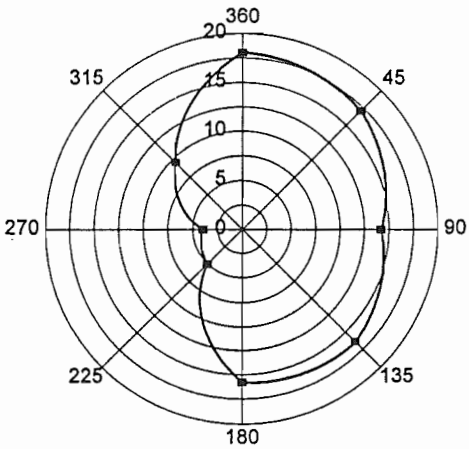

f. July Wind Direction Frequency (%)
1000 mb

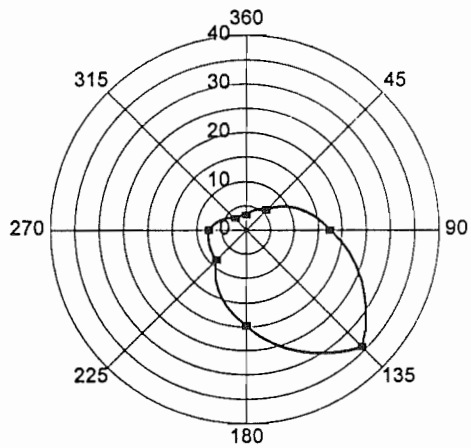

Figure 5 a. - f. Wind Direction Frequency

a.

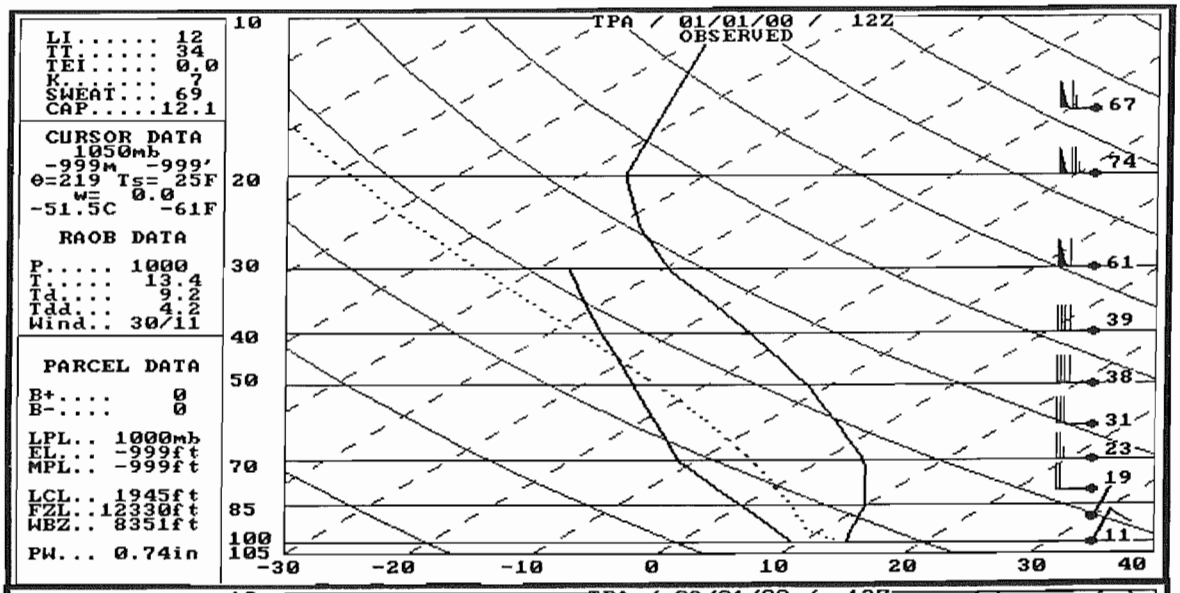

b.

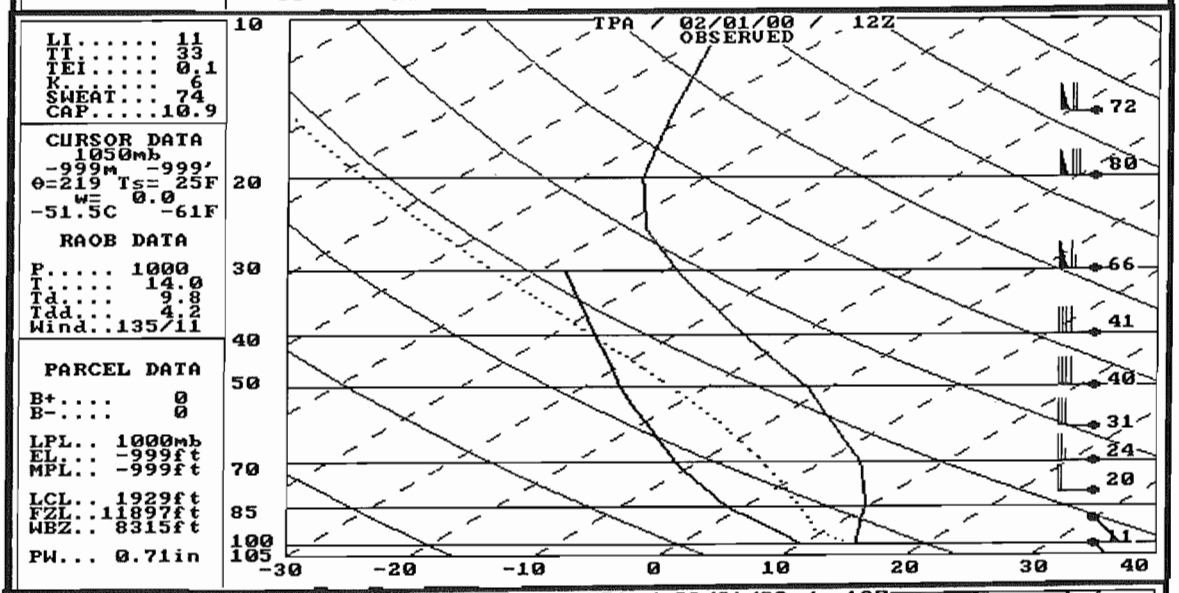

c.

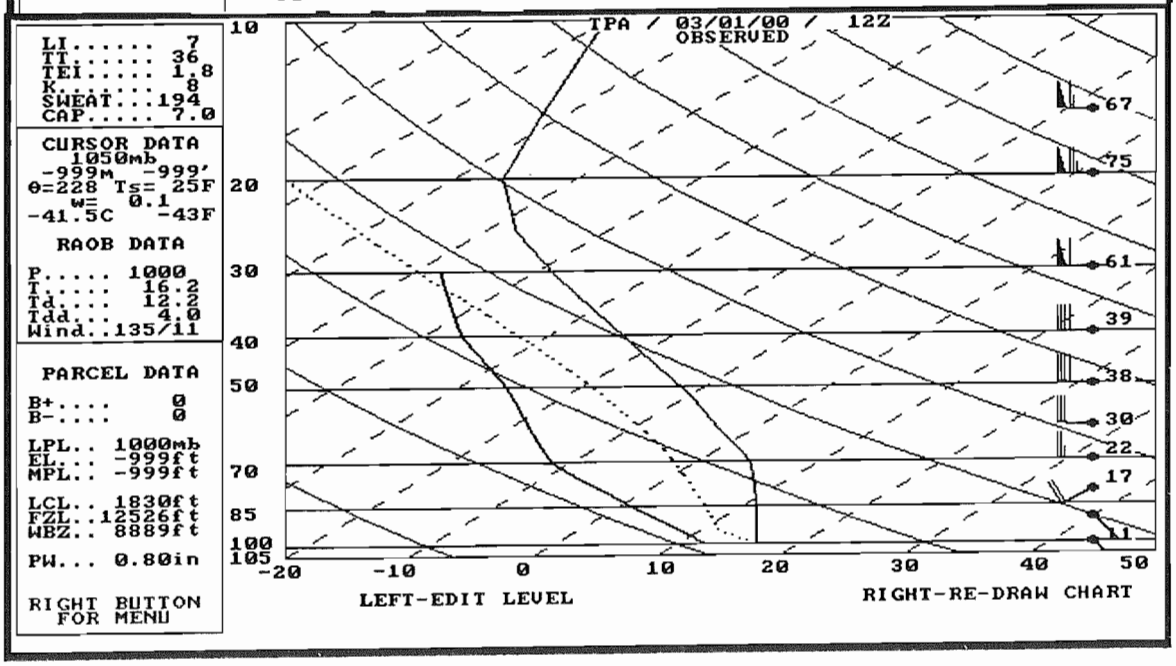

Figure 6 a. - c. Skew T Diagrams

d.

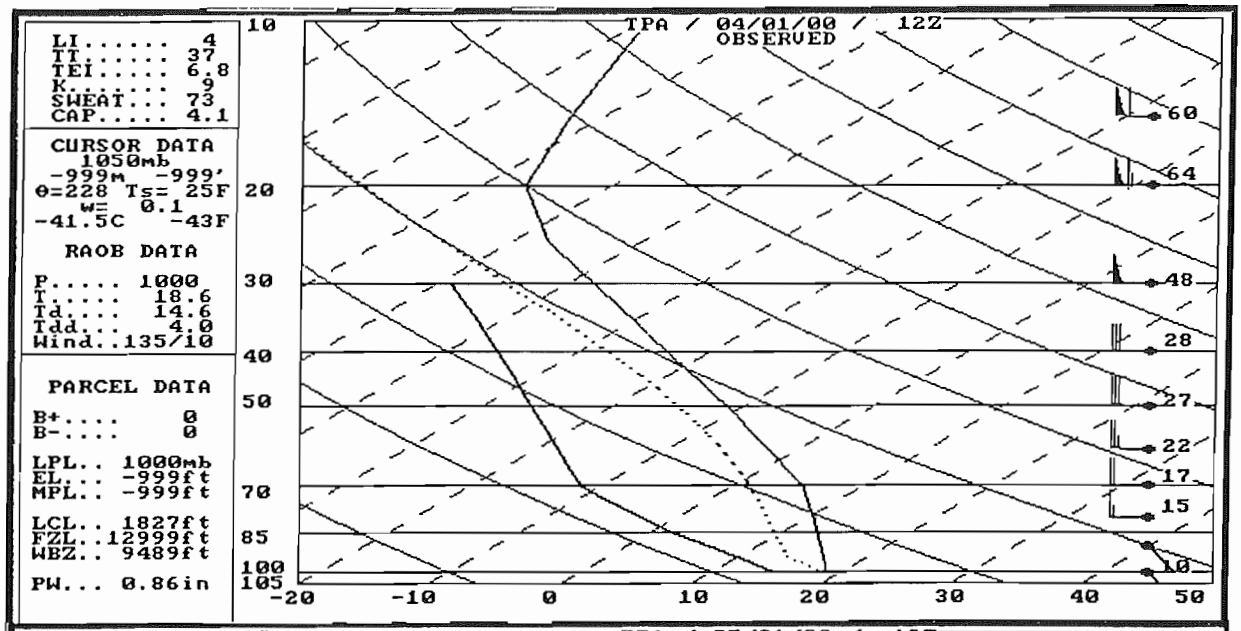

e.

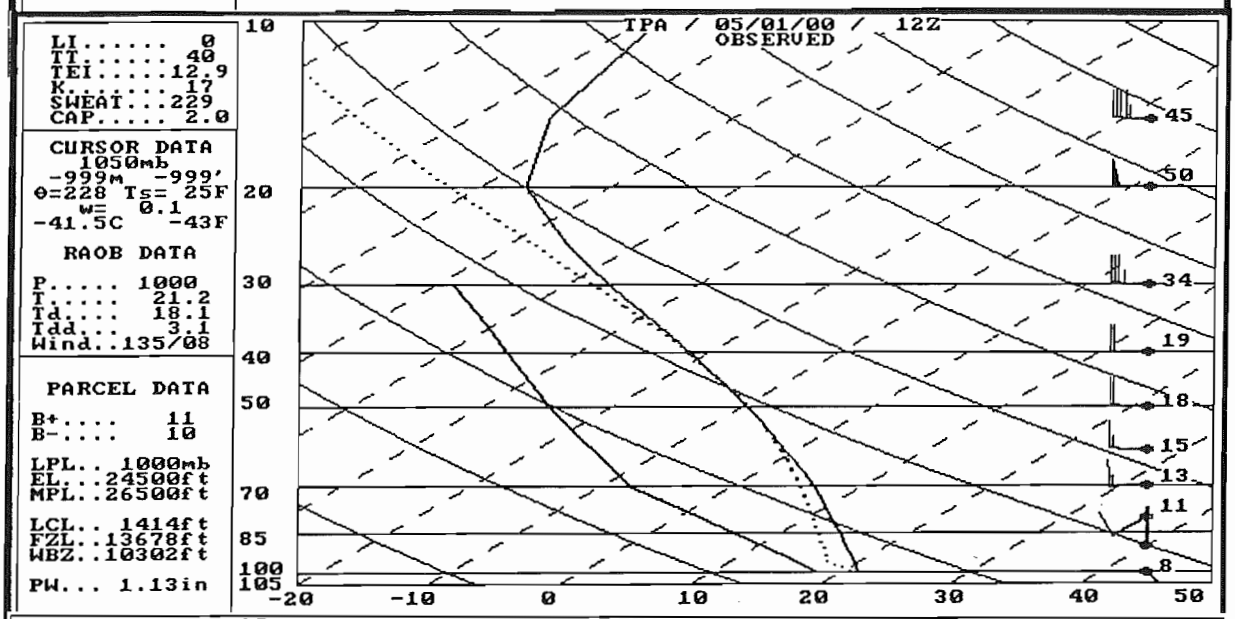

f.

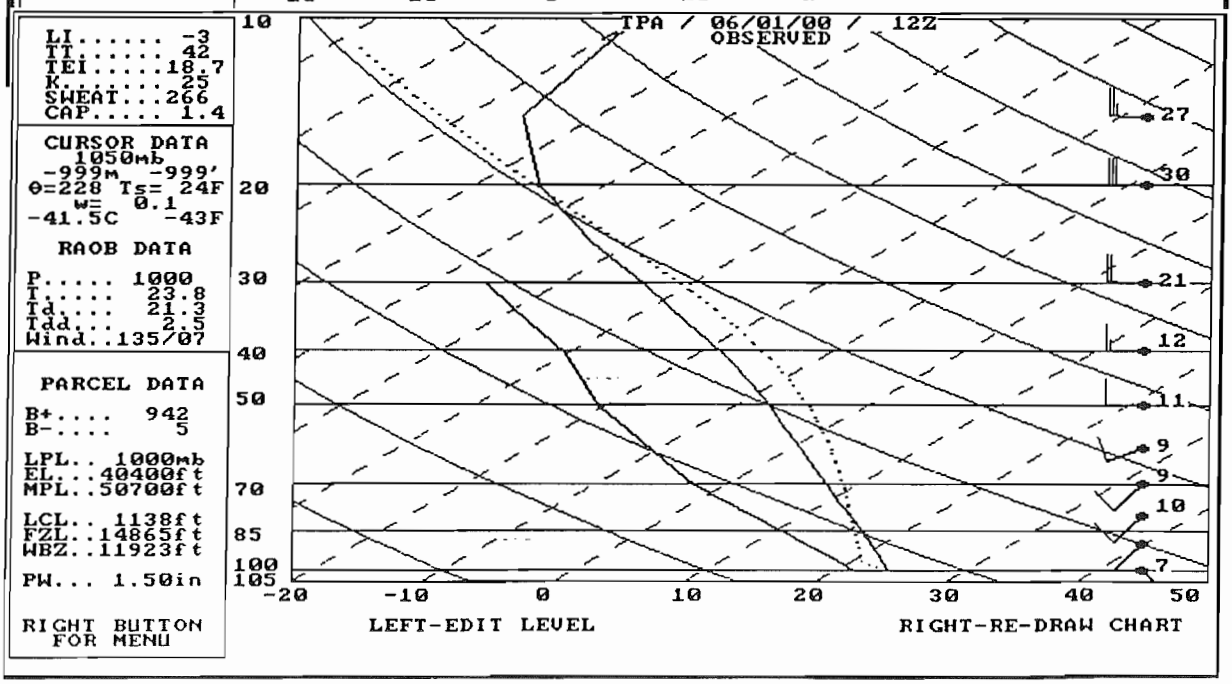

Figure 6 d. - f. Skew T Diagrams

g.

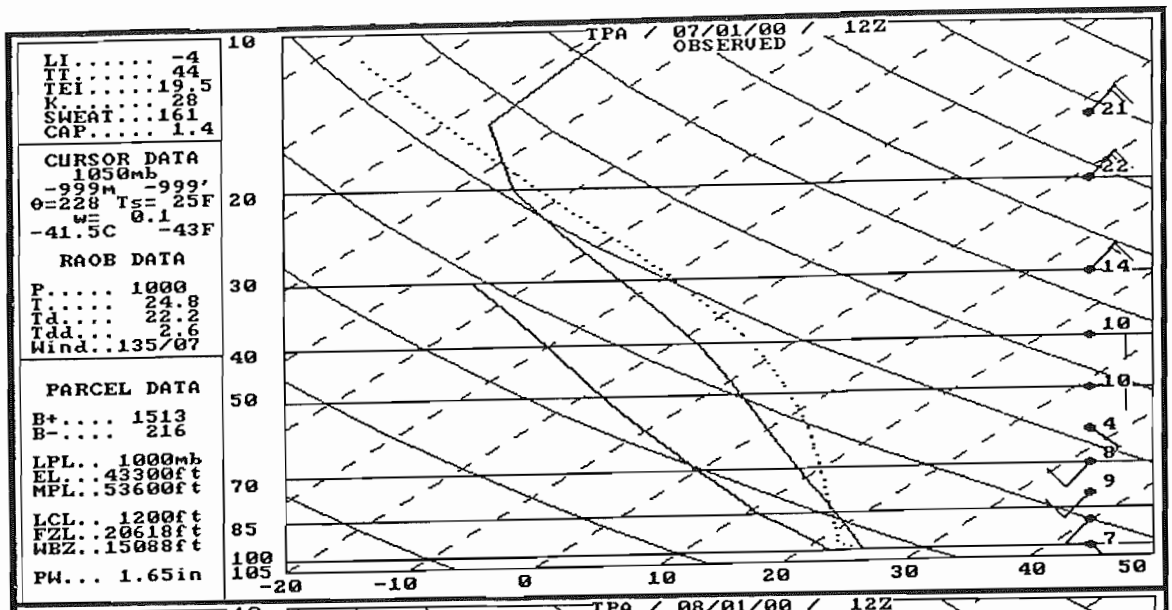

h.

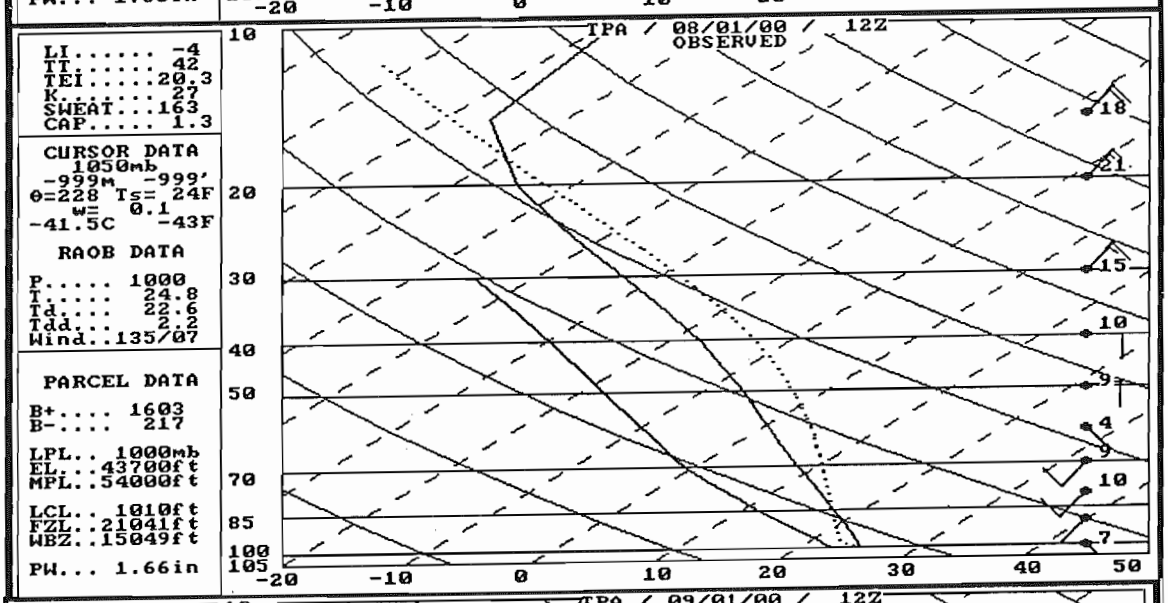

i.

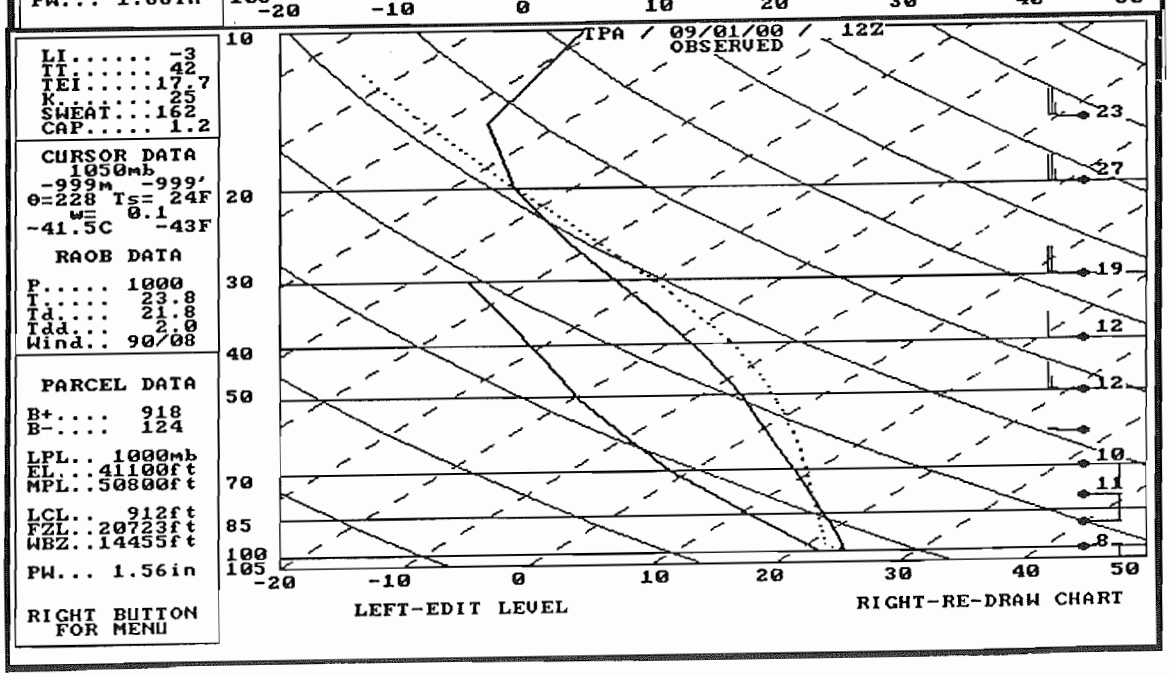

Figure 6 g. - i. Skew T Diagrams

j.

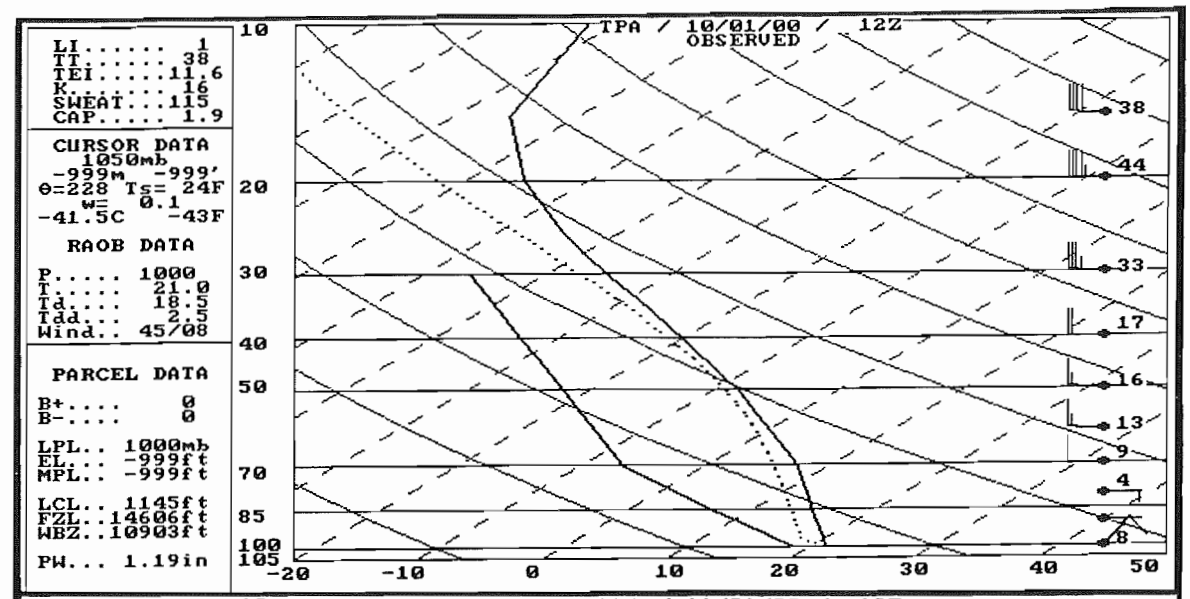

k.

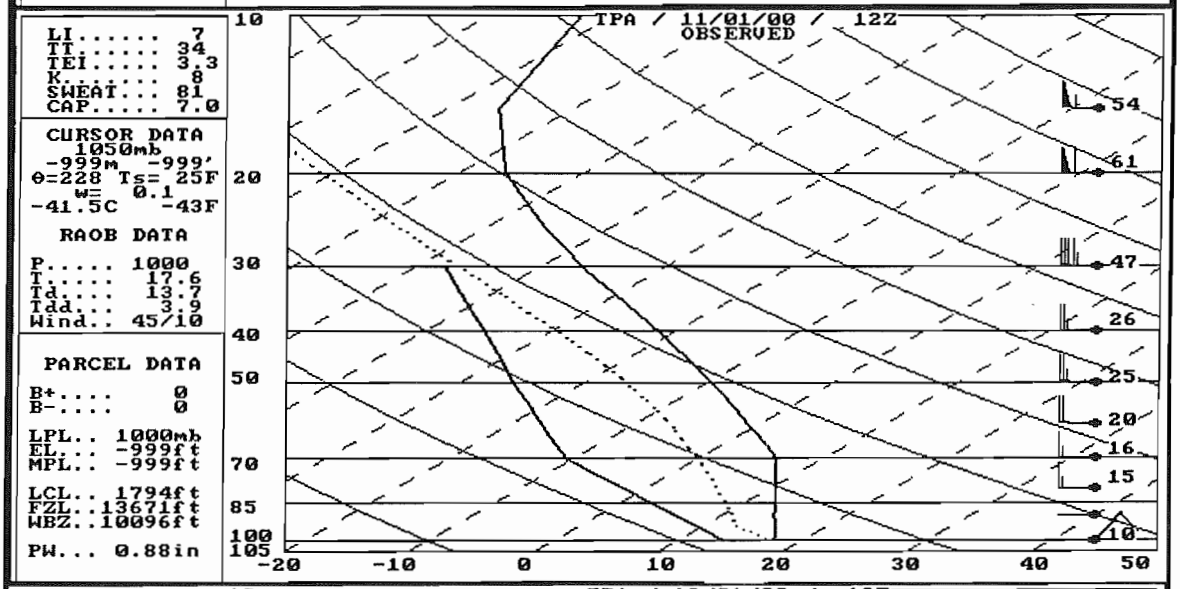

l.

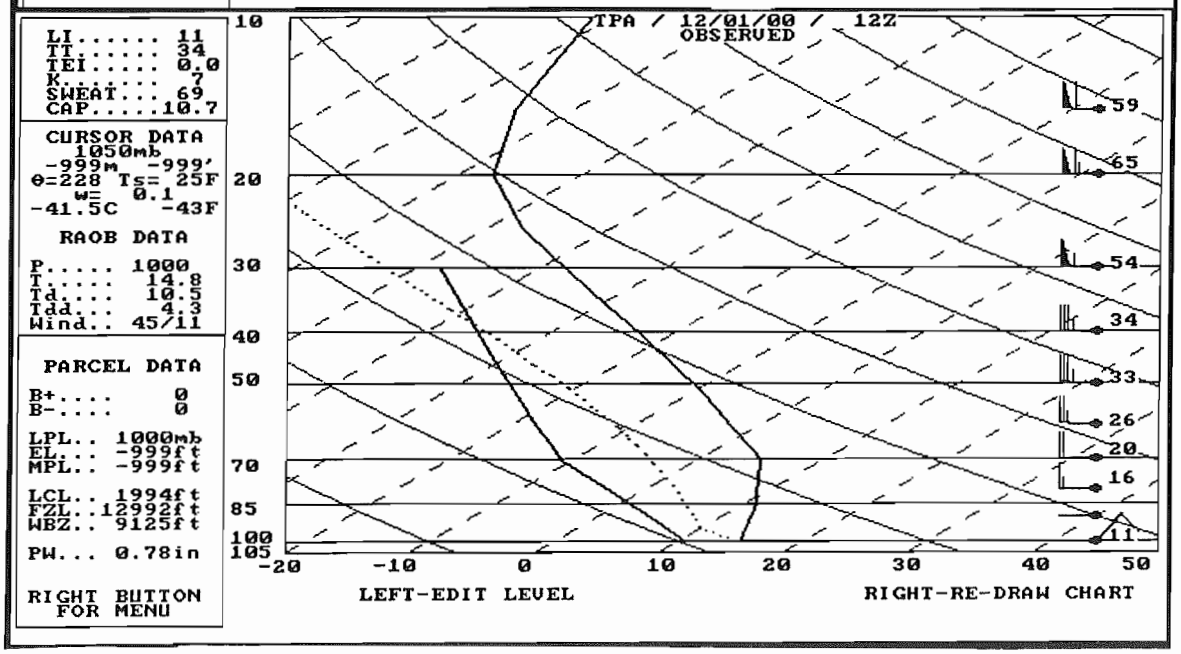

Figure 6 j. - l. Skew T Diagrams

Height (m)

Pressure (mb)		JAN	FEB	MAR	APR	MAY	JUN	JUL	AUG	SEP	OCT	NOV	DEC
1000	avg	167	158	151	148	140	140	154	146	134	145	156	170
	min	4	25	4	33	44	17	64	60	-1	-13	24	29
	max	285	263	252	239	214	217	202	209	197	223	242	272
850	avg	1530	1520	1523	1531	1536	1548	1568	1559	1545	1542	1537	1538
	min	1384	1344	1313	1413	1435	1400	1481	1473	1409	1393	1417	1401
	max	1620	1620	1611	1619	1602	1618	1613	1624	1602	1608	1610	1625
700	avg	3126	3115	3125	3140	3154	3177	3201	3194	3177	3163	3150	3142
	min	2874	2926	2902	2979	3034	3043	3124	3111	3057	3034	3015	2975
	max	3234	3242	3230	3240	3223	3238	3254	3257	3240	3237	3231	3241
500	avg	5782	5765	5783	5807	5833	5874	5901	5898	5882	5856	5831	5808
	min	5372	5510	5480	5572	5666	5760	5831	5776	5776	5702	5637	5538
	max	5927	5933	5913	5957	5928	5953	5973	5972	5964	5941	5958	5934
400	avg	7451	7431	7452	7481	7518	7574	7606	7605	7587	7549	7515	7484
	min	7001	7148	7084	7200	7306	7457	7520	7443	7465	7385	7297	7130
	max	7619	7624	7617	7655	7631	7676	7710	7675	7677	7661	7668	7651
300	avg	9487	9463	9488	9523	9573	9654	9691	9694	9674	9618	9571	9528
	min	8964	9124	9033	9203	9300	9510	9586	9494	9519	9419	9327	9075
	max	9693	9675	9678	9712	9720	9765	9827	9783	9780	9769	9751	9730
250	avg	10712	10689	10714	10752	10810	10904	10945	10950	10928	10863	10829	10757
	min	10183	10329	10239	10414	10510	10729	10836	10745	10703	10626	10548	10284
	max	10939	10903	10919	10947	10978	11032	11100	11048	11043	11030	11004	10975
200	avg	12153	12136	12158	12195	12259	12365	12408	12416	12392	12321	12259	12198
	min	11665	11760	11718	11870	11963	12177	12284	12234	12069	12076	11978	11761
	max	12398	12361	12363	12405	12454	12532	12589	12523	12541	12504	12472	12426
150	avg	13952	13944	13962	13992	14048	14153	14193	14203	14180	14111	14042	13983
	min	13521	13580	13565	13693	13767	13970	14058	14065	13753	13894	13755	13634
	max	14192	14189	14168	14213	14247	14360	14397	14322	14372	14294	14269	14208
100	avg	16398	16392	16417	16449	16501	16578	16619	16626	16590	16525	16460	16421
	min	16089	16107	16151	16193	16276	16378	16479	16495	16170	16367	16233	16175
	max	16618	16625	16618	16619	16697	16773	16773	16751	16781	16659	16736	16632

Temperature (C)

Pressure (mb)		JAN	FEB	MAR	APR	MAY	JUN	JUL	AUG	SEP	OCT	NOV	DEC
1000	avg	13.5	14.0	16.3	18.7	21.3	23.8	24.9	24.7	23.8	21.0	17.7	14.9
	min	-5.1	-2.1	-3.7	6.6	11.4	15.8	20.5	20.5	14.9	8.7	-0.3	-8.0
	max	22.7	23.5	23.3	24.1	26.3	28.0	28.9	28.9	27.5	26.1	24.7	23.3
850	avg	9.9	9.7	11.1	12.7	14.5	16.5	17.3	17.4	16.8	14.6	12.5	10.8
	min	-10.8	-8.1	-8.2	-2.6	3.4	9.4	13.4	13.2	10.6	3.7	-1.8	-6.9
	max	17.2	18.1	21.5	21.5	20.5	21.4	22.9	21.0	19.7	19.6	18.6	18.8
700	avg	3.5	3.0	4.2	5.3	6.3	7.5	8.0	8.3	8.2	7.3	6.3	4.8
	min	-20.0	-13.4	-9.5	-9.3	-1.3	3.3	4.3	4.3	2.7	2.0	-4.0	-7.5
	max	11.3	12.3	12.1	13.3	13.7	12.4	12.2	13.5	11.6	12.1	13.2	12.6
500	avg	-12.2	-12.3	-12.3	-11.5	-9.9	-7.8	-7.4	-7.0	-7.0	-8.5	-9.8	-11.2
	min	-25.1	-25.7	-26.6	-21.8	-18.6	-12.8	-11.2	-12.4	-11.3	-15.0	-18.3	-24.9
	max	-5.1	-5.0	-4.9	-4.5	-4.2	-3.1	-2.0	-3.0	-2.0	-3.4	-2.8	-4.2
400	avg	-23.9	-24.5	-24.0	-23.2	-21.5	-18.8	-18.1	-17.7	-18.0	-20.0	-21.5	-23.0
	min	-35.8	-36.6	-40.0	-37.6	-30.9	-25.8	-22.0	-22.8	-25.1	-27.8	-31.6	-36.6
	max	-16.4	-16.0	-16.6	-16.7	-15.6	-13.6	-13.8	-14.3	-12.4	-14.2	-15.3	-14.9
300	avg	-39.9	-39.4	-39.1	-38.3	-36.9	-34.1	-33.4	-33.0	-33.4	-35.4	-36.8	-38.3
	min	-47.1	-47.7	-49.6	-46.9	-46.1	-40.4	-37.7	-38.0	-46.7	-43.9	-43.7	-47.9
	max	-31.2	-30.4	-28.1	-31.3	-30.7	-27.7	-28.9	-29.0	-27.7	-27.0	-31.0	-26.3
250	avg	-48.2	-47.8	-47.9	-47.6	-46.3	-44.0	-43.4	-43.0	-43.4	-44.8	-46.1	-47.7
	min	-56.0	-58.0	-56.0	-55.0	-53.4	-49.0	-47.2	-47.7	-59.6	-51.5	-53.5	-55.2
	max	-35.8	-33.9	-31.8	-37.2	-39.1	-37.6	-38.5	-37.6	-37.2	-39.1	-38.3	-37.2
200	avg	-56.6	-55.2	-56.0	-56.6	-56.4	-55.2	-55.2	-54.8	-54.8	-55.3	-56.3	-57.3
	min	-63.9	-64.3	-64.3	-63.7	-63.7	-61.1	-59.5	-59.0	-68.3	-62.6	-62.1	-64.7
	max	-42.3	-42.0	-44.1	-46.5	-47.1	-48.7	-48.4	-49.5	-48.4	-47.6	-47.0	-45.1
150	avg	-62.7	-62.1	-62.2	-62.6	-64.0	-65.9	-66.5	-66.3	-66.3	-65.7	-66.0	-64.8
	min	-74.0	-72.7	-73.1	-72.6	-71.8	-72.5	-71.3	-72.4	-72.6	-71.7	-73.0	-73.0
	max	-51.8	-53.3	-52.2	-54.5	-54.2	-58.2	-59.4	-56.9	-57.0	-59.0	-54.7	-52.5
100	avg	-71.4	-71.1	-70.3	-69.9	-68.9	-70.3	-69.1	-69.3	-71.4	-72.4	-72.7	-71.7
	min	-80.1	-79.9	-78.4	-77.6	-84.3	-79.0	-76.8	-77.0	-80.2	-80.4	-84.2	-80.6
	max	-58.2	-55.7	-57.8	-61.1	-61.4	-63.0	-62.2	-63.0	-63.2	-63.2	-64.9	-60.8

Dewpoint (C)

Pressure (mb)		JAN	FEB	MAR	APR	MAY	JUN	JUL	AUG	SEP	OCT	NOV	DEC
1000	avg	9.3	9.8	12.3	14.7	18.2	21.3	22.3	22.5	21.8	18.5	13.8	10.6
	min	-18.0	-18.4	-13.3	-8.0	-0.1	8.0	14.4	15.0	4.4	-1.8	-13.9	-17.2
	max	21.6	21.4	22.8	23.2	25.5	25.9	26.9	26.8	26.7	24.6	23.5	23.0
850	avg	-0.5	-1.0	0.8	1.4	6.3	10.3	11.2	11.7	11.2	7.0	2.7	0.4
	min	-26.7	-25.3	-25.9	-25.0	-17.2	-11.5	-11.7	-6.3	-12.0	-13.8	-29.0	-29.0
	max	14.2	14.2	15.1	15.4	16.8	17.2	17.5	17.4	18.1	16.8	15.5	15.0
700	avg	-11.3	-11.5	-11.7	-11.4	-7.6	-2.3	-0.8	-0.3	-1.4	-7.0	-10.6	-11.1
	min	-38.1	-29.6	-35.0	-31.0	-27.0	-28.4	-18.3	-20.7	-21.8	-18.5	-29.6	-31.1
	max	7.2	9.4	6.9	6.8	7.0	9.1	8.6	9.2	9.0	9.5	7.1	6.4
500	avg	-26.7	-26.8	-26.6	-26.3	-24.7	-20.7	-18.2	-18.0	-19.7	-22.9	-26.1	-26.1
	min	-47.3	-45.0	-53.1	-48.6	-44.4	-40.5	-39.9	-35.3	-40.6	-32.8	-47.4	-45.9
	max	-9.6	-10.0	-8.8	-8.4	-6.5	-4.0	-6.3	-5.1	-1.5	-6.6	-8.4	-8.6
400	avg	-36.0	-36.6	-36.4	-36.4	-35.0	-31.6	-30.1	-29.5	-30.7	-33.4	-35.4	-35.7
	min	-54.0	-51.7	-54.6	-55.3	-52.5	-47.9	-50.2	-55.7	-45.3	-44.2	-55.8	-58.1
	max	-21.6	-20.7	-20.0	-20.0	-18.5	-14.9	-18.3	-15.9	-15.4	-17.1	-18.8	-19.9
300	avg	-48.2	-48.6	-48.1	-49.1	-48.5	-45.7	-45.0	-44.7	-45.0	-46.8	-48.2	-48.5
	min	-59.4	-58.6	-59.4	-59.6	-59.7	-59.1	-62.3	-59.9	-57.2	-54.5	-59.2	-67.9
	max	-37.1	-36.9	-31.0	-35.8	-35.2	-31.7	-33.6	-33.3	-31.4	-34.2	-36.0	-36.8

Humidity (%)

Pressure (mb)		JAN	FEB	MAR	APR	MAY	JUN	JUL	AUG	SEP	OCT	NOV	DEC
1000	avg	76	76	77	78	82	86	85	87	89	86	78	75
850	avg	49	47	49	46	58	67	67	69	70	60	51	49
700	avg	33	33	30	29	36	50	54	55	51	35	29	31
500	avg	29	29	29	28	29	35	42	41	36	30	25	28
400	avg	32	31	31	29	28	31	34	35	32	29	27	30
300	avg	40	36	38	31	29	30	30	30	30	30	29	33

January Wind Frequency (Percent)

Direction	1000 mb	850 mb	700 mb	500 mb	400 mb	300 mb	250 mb	200 mb	150 mb	100 mb
360	18.02	5.11	2.36	1.44	0.69	1.06	1.00	0.36	0.00	0.00
45	17.07	3.03	1.04	0.10	0.39	0.21	0.00	0.00	0.00	0.19
90	14.19	4.35	0.57	0.10	0.00	0.00	0.00	0.00	0.00	0.00
135	16.40	6.91	1.42	0.10	0.00	0.00	0.00	0.12	0.00	0.00
180	15.72	13.34	5.47	0.58	0.39	0.42	0.33	0.00	0.00	0.19
225	4.99	22.52	27.08	26.46	24.51	21.90	19.78	16.00	13.50	17.07
270	4.03	26.40	46.79	62.70	67.03	68.04	70.22	76.41	81.82	77.37
315	9.59	18.35	15.28	8.53	6.99	8.36	8.67	7.10	4.68	5.19

February Wind Frequency (Percent)

Direction	1000 mb	850 mb	700 mb	500 mb	400 mb	300 mb	250 mb	200 mb	150 mb	100 mb
360	17.83	6.85	0.11	0.00	0.57	0.74	0.92	0.71	0.32	0.00
45	14.44	3.32	0.00	0.23	0.23	0.12	0.13	0.00	0.00	0.00
90	13.69	3.53	0.22	0.11	0.11	0.00	0.26	0.00	0.00	0.00
135	17.94	8.03	0.11	0.00	0.00	0.25	0.13	0.00	0.00	0.00
180	14.12	12.96	1.55	0.80	0.80	0.12	0.13	0.14	0.16	0.71
225	6.05	23.77	24.53	22.91	22.78	20.22	17.80	16.86	11.43	13.21
270	5.31	24.84	63.93	66.44	66.06	69.36	69.90	75.00	83.17	78.77
315	10.62	16.70	9.54	9.51	9.45	9.19	10.73	7.29	4.92	7.31

March Wind Frequency (Percent)

Direction	1000 mb	850 mb	700 mb	500 mb	400 mb	300 mb	250 mb	200 mb	150 mb	100 mb
360	14.84	5.84	4.81	1.97	2.04	1.77	1.40	0.88	0.27	0.00
45	11.46	5.08	2.21	0.99	0.71	0.11	0.23	0.00	0.00	0.00
90	15.51	5.56	1.64	0.39	0.20	0.22	0.00	0.00	0.00	0.00
135	23.03	8.81	2.41	0.39	0.00	0.11	0.12	0.13	0.00	0.00
180	15.99	15.71	5.68	0.39	0.82	0.22	0.35	0.00	0.00	0.19
225	4.82	23.47	25.22	15.48	14.58	13.25	12.21	11.03	5.77	7.96
270	4.34	20.59	41.87	64.79	68.81	71.41	69.07	73.93	85.03	82.22
315	10.02	14.94	16.17	15.58	12.84	12.91	16.63	14.04	8.93	9.63

April Wind Frequency (Percent)

Direction	1000 mb	850 mb	700 mb	500 mb	400 mb	300 mb	250 mb	200 mb	150 mb	100 mb
360	11.09	6.65	8.41	6.39	4.38	3.57	2.89	2.29	1.09	0.48
45	12.11	8.18	5.64	1.65	1.46	0.76	0.67	0.23	0.12	0.00
90	20.43	11.96	7.08	1.34	0.52	0.32	0.11	0.00	0.00	0.00
135	22.90	11.66	4.31	0.82	0.00	0.00	0.11	0.11	0.00	0.00
180	12.94	13.50	6.26	1.75	0.63	0.43	0.11	0.23	0.12	0.24
225	5.44	16.26	15.28	10.61	9.39	9.09	8.23	6.87	4.59	5.54
270	6.06	20.04	34.15	50.46	57.83	62.77	61.18	65.41	74.61	74.22
315	9.03	11.76	18.87	26.98	25.78	23.05	26.70	24.86	19.47	19.52

May Wind Frequency (Percent)

Direction	1000 mb	850 mb	700 mb	500 mb	400 mb	300 mb	250 mb	200 mb	150 mb	100 mb
360	5.64	7.37	7.96	10.41	9.40	7.40	6.95	6.58	5.06	7.76
45	12.30	11.06	10.37	4.55	1.96	1.97	1.22	1.24	0.68	2.11
90	24.05	13.46	9.72	2.32	1.40	1.31	1.32	0.76	0.39	0.00
135	27.01	14.38	8.61	2.70	2.33	1.12	0.85	0.38	0.00	0.26
180	11.66	12.90	8.70	3.53	2.42	3.37	2.44	1.14	0.00	0.13
225	6.38	18.99	17.69	12.55	13.31	14.23	13.35	13.25	7.98	7.37
270	5.83	14.19	23.61	40.89	42.92	43.45	44.17	47.57	59.14	55.26
315	7.12	7.65	13.33	23.05	26.26	27.15	29.70	29.08	26.75	27.11

June Wind Frequency (Percent)

Direction	1000 mb	850 mb	700 mb	500 mb	400 mb	300 mb	250 mb	200 mb	150 mb	100 mb
360	4.76	5.32	6.36	11.42	11.72	14.39	16.26	15.49	18.18	22.25
45	10.91	9.51	7.57	10.49	10.03	8.94	8.13	11.43	12.44	24.35
90	20.43	14.83	13.18	7.49	6.00	5.36	5.20	4.72	4.69	12.17
135	25.56	12.13	10.56	4.49	3.19	3.10	2.84	1.70	0.96	2.75
180	16.51	13.43	11.87	6.46	7.03	5.46	4.54	3.02	1.15	2.49
225	9.24	21.64	22.52	15.82	15.56	17.03	19.09	16.24	9.28	3.93
270	8.21	17.82	19.07	25.47	25.87	28.13	25.05	26.35	29.47	13.87
315	4.38	5.32	8.88	18.35	20.62	17.59	18.90	21.06	23.83	18.19

July Wind Frequency (Percent)

Direction	1000 mb	850 mb	700 mb	500 mb	400 mb	300 mb	250 mb	200 mb	150 mb	100 mb
360	3.06	3.15	5.11	11.46	12.23	15.72	15.43	17.33	14.47	3.87
45	5.94	4.45	7.15	13.61	18.11	24.51	28.25	30.32	38.22	37.29
90	17.36	13.90	15.51	15.75	20.54	18.71	17.77	19.30	22.42	49.03
135	34.17	16.50	15.51	11.74	7.84	5.61	5.24	4.14	3.12	5.03
180	19.68	20.48	16.06	9.69	7.75	5.24	4.40	3.58	2.74	1.81
225	8.73	22.89	20.33	13.42	10.18	10.29	8.89	7.53	3.88	0.77
270	7.71	14.27	14.30	14.54	12.51	10.48	9.26	8.57	7.28	0.90
315	3.34	4.36	6.04	9.79	10.83	9.45	10.76	9.23	7.85	1.29

August Wind Frequency (Percent)

Direction	1000 mb	850 mb	700 mb	500 mb	400 mb	300 mb	250 mb	200 mb	150 mb	100 mb
360	4.53	4.15	6.45	11.86	11.68	14.31	16.21	19.14	19.30	3.73
45	8.42	8.12	9.40	12.87	19.32	21.88	23.30	25.76	30.51	35.36
90	25.35	17.34	16.96	15.53	17.20	18.28	16.11	14.72	17.92	46.79
135	34.04	20.39	15.76	13.97	11.59	8.13	7.27	5.61	4.69	8.98
180	15.91	15.59	14.84	10.48	10.40	8.13	7.64	6.90	4.87	2.10
225	6.75	20.76	18.34	12.04	10.58	11.17	10.59	9.20	7.35	1.63
270	2.78	8.86	12.44	14.43	9.48	8.96	8.01	10.12	8.18	0.58
315	2.22	4.80	5.81	8.82	9.75	9.14	10.87	8.56	7.17	0.82

September Wind Frequency (Percent)

Direction	1000 mb	850 mb	700 mb	500 mb	400 mb	300 mb	250 mb	200 mb	150 mb	100 mb
360	4.72	4.80	7.39	10.70	12.91	12.90	16.23	16.98	19.10	15.38
45	19.63	13.74	14.30	14.56	16.86	15.23	14.77	14.15	18.41	32.46
90	35.23	24.69	20.15	13.60	10.02	10.09	8.94	6.15	5.29	17.08
135	23.29	19.02	13.44	9.93	8.00	4.95	3.01	4.00	2.74	4.95
180	9.14	11.24	11.80	8.78	7.51	7.57	7.68	5.66	4.51	2.22
225	3.18	12.30	12.86	13.21	14.07	17.17	16.91	16.49	11.36	4.69
270	2.12	9.41	14.68	18.42	18.69	20.17	19.53	19.41	20.37	12.91
315	2.69	4.80	5.37	10.80	11.95	11.93	12.93	17.17	18.22	10.30

October Wind Frequency (Percent)

Direction	1000 mb	850 mb	700 mb	500 mb	400 mb	300 mb	250 mb	200 mb	150 mb	100 mb
360	12.66	6.71	7.91	7.89	7.64	6.43	4.87	7.54	4.65	6.79
45	32.79	13.74	13.61	6.94	5.10	2.89	3.90	2.62	2.33	1.89
90	24.35	26.20	13.61	3.15	2.87	2.57	1.62	1.97	1.99	3.02
135	17.53	14.06	6.33	3.79	2.55	2.25	2.92	1.64	1.00	1.51
180	5.52	5.75	9.18	7.89	4.46	4.18	2.27	2.62	2.33	1.51
225	2.92	12.46	17.72	16.72	18.47	19.61	19.81	18.03	15.61	15.85
270	1.95	11.50	18.35	34.70	40.13	43.41	43.51	47.87	51.16	49.43
315	2.27	9.58	13.29	18.93	18.79	18.65	21.10	17.70	20.93	20.00

November Wind Frequency (Percent)

Direction	1000 mb	850 mb	700 mb	500 mb	400 mb	300 mb	250 mb	200 mb	150 mb	100 mb
360	16.14	7.57	6.13	4.74	4.40	4.45	3.47	3.14	1.23	1.82
45	23.63	6.05	6.38	2.00	2.01	0.89	0.51	0.13	0.00	0.17
90	22.74	12.48	5.51	1.62	0.63	0.13	0.00	0.00	0.00	0.50
135	17.53	12.74	6.26	1.25	0.75	0.51	0.39	0.13	0.14	0.00
180	9.91	14.25	8.51	4.74	1.63	0.64	1.03	0.92	0.27	0.33
225	3.18	16.52	21.90	23.35	23.24	23.63	22.85	21.57	17.05	17.22
270	2.54	17.15	29.29	44.82	52.01	54.13	55.71	58.43	68.49	64.74
315	4.32	13.24	16.02	17.48	15.33	15.63	16.05	15.69	12.82	15.23

December Wind Frequency (Percent)

Direction	1000 mb	850 mb	700 mb	500 mb	400 mb	300 mb	250 mb	200 mb	150 mb	100 mb
360	16.91	6.31	4.35	2.16	2.18	2.43	1.99	1.24	0.76	1.50
45	21.19	5.01	2.96	0.47	0.76	0.49	0.30	0.31	0.00	0.60
90	17.66	7.05	2.96	0.66	0.57	0.10	0.00	0.00	0.00	0.30
135	16.91	12.80	2.96	1.12	0.38	0.39	0.20	0.10	0.00	0.15
180	13.75	15.31	5.83	1.69	1.51	0.78	0.40	0.00	0.32	0.30
225	4.00	15.58	24.91	24.27	23.18	21.36	19.90	19.61	13.70	16.97
270	2.51	22.08	39.35	55.86	58.66	62.14	64.58	65.02	75.40	68.92
315	7.06	15.86	16.67	13.78	12.77	12.33	12.64	13.73	9.82	11.26

Wind Speed (knots)

Pressure (mb)		JAN	FEB	MAR	APR	MAY	JUN	JUL	AUG	SEP	OCT	NOV	DEC
1000	avg	11	11	11	10	8	7	7	7	8	8	10	11
	min	0	0	0	0	0	0	0	0	0	2	0	0
	max	27	37	27	56	25	29	29	25	25	23	31	31
850	avg	17	18	17	14	12	10	10	10	11	11	14	15
	min	0	0	0	0	2	0	0	0	0	0	0	2
	max	56	64	67	48	54	62	39	39	54	48	44	48
700	avg	24	25	23	17	13	10	9	10	11	11	16	20
	min	2	2	2	0	0	0	0	0	0	2	0	0
	max	75	83	75	69	46	58	37	50	48	52	62	79
500	avg	39	41	39	28	19	12	10	10	12	17	26	34
	min	2	2	2	2	0	0	0	0	0	0	2	2
	max	106	102	116	96	67	48	31	42	46	54	87	96
400	avg	50	52	49	37	25	15	11	11	15	23	34	43
	min	6	4	2	2	2	0	0	0	0	2	2	2
	max	119	152	129	96	79	56	39	48	58	64	114	114
300	avg	61	66	61	48	34	21	14	15	19	33	47	54
	min	0	0	2	4	2	0	0	0	0	2	2	2
	max	164	179	137	117	106	73	58	71	65	92	154	135
250	avg	69	75	69	56	41	25	18	18	23	40	55	60
	min	4	6	4	2	2	0	0	0	2	6	4	2
	max	158	171	183	125	117	85	64	79	73	94	150	189
200	avg	74	80	75	64	50	30	22	21	27	44	61	65
	min	6	8	6	6	2	2	0	2	2	2	4	2
	max	152	162	169	133	137	96	83	87	83	112	175	175
150	avg	67	72	67	60	48	27	21	18	23	38	54	59
	min	12	17	19	8	2	2	2	2	0	4	2	8
	max	156	166	152	150	116	148	65	71	85	83	129	142
100	avg	47	50	46	40	27	14	15	13	12	19	33	41
	min	8	6	6	4	2	2	0	0	0	0	2	2
	max	117	110	112	89	65	46	44	40	39	54	71	129