W.P. (CEIP)

Alaska. Dept. of Community and Regional Affairs

CITY OF KENAI

1979
COASTAL ENERGY IMPACT PROGRAM
ENGINEERING GRANT

WATER & SEWER IMPROVEMENTS

BEAVER LOOP ROAD (WEST)

79 - W 1

79 - S 1

#7

HJ
295
.C58
1979

E-CORTHELL-BRYSON & FREAS
KENAI, ALASKA

JANUARY, 1979

The preparation of this document was financed in part by funds from the Office of Coastal Zone Management, National Oceanic and Atmospheric Administration, U.S. Department of Commerce, administered by the Division of Community Planning, Alaska Department of Community and Regional Affairs

N.P. (CEIP)

15629

ALASKA. DEPT. OF COMMUNITY AND REGIONAL AFFAIRS
HT 295 C5 A19 79

GENERAL INDEX

1. General Index

2. Invitation For Bids

3. Instructions to Bidders

4. Bid Proposal

5. Bid Bond

6. Contract

7. Performance Bonc

8. Payment Bond

9. General Conditions

10. Special Provisions

11. Technical Construction Specifications

Section 6 - Corrugated Metal Pipe Culverts
Section 7 - Construction Specifications for Water Systems
Section 8 - Construction Specifications for Sewer Systems
Section 9 - Construction Specifications for Pressure Sewer Systems
Section 11 - Construction Specifications Sewage Pumping Station

12. Standard Details

W-S-1	Typical Trench Section
W-2	Steam Thaw Pipes for "L" Base Hydrant
W-3	Water Service Connection, Single
W-3-A	Water Service Connection, Double
W-4	Thrust Blocks
W-5	Typical Valve Box and Lid
W-6	Guard Post Details for Fire Hydrants
W-7	"L" Base Fire Hydrant
S-1	Sewer Service Connection, Single
S-1-D	Sewer Service Connection, Double
S-2	Sanitary Sewer Manhole
S-5	Sewer Encasement
S-6	Sewer Stubout
S-8	Sanitary Sewer Crossing

INVITATION FOR BIDS

City of Kenai, Alaska

Separate sealed bids for one or more unit price contracts for construction of Water and Sewer Improvements: Beaver Loop Road (West) at Kenai, Alaska will be received by the City of Kenai, at the office of the City Manager, Box 580, Kenai, Alaska, 99611 until 2:00 o'clock p.m., Alaska Standard Time, and then, at said office publically opened and read aloud.

The plans, specifications, form of bid, form of contract, instructions to bidders, forms of bonds and other contract documents may be examined at:

City of Kenai, Public Works Office

Office of Wince-Corthell-Bryson and Freas
Benco Building
Kenai, Alaska

Copies may be obtained at the City of Kenai, Public Works Office, P. O. Box 580, Kenai, Alaska upon payment of $25.00 for each set. Any bidder or non-bidder, upon returning the documents in good condition within fifteen (15) days after the bid opening, will be refunded $25.00 less $5.00 for each set sent by mail.

The Owner reserves the right to waive any informalities or to reject any or all bids.

Each bidder must deposit, with his bid, security in the amount of five percent (5%) of his total bid, in the form and subject to the conditions provided in the Instructions to Bidders.

No bidder may withdraw his bid within 30 days after the actual date that bids are opened.

A pre-bid conference for prospective bidders will be held on , at 2:00 p.m. Alaska Standard time at the City of Kenai Public Works Office, Kenai, Alaska.

February 26, 1979

John E. Wise
City Manager

INSTRUCTIONS TO BIDDERS

1. CONTENTS OF PROPOSAL FORMS

Prospective bidders will be furnished with the proposal forms which shall set forth a statement of intent by the bidder to perform the work required by these Contract Documents for a certain fee. The proposal form may require the bidder to set forth such certain fee in one of the following ways or in any combination of the following ways:

a) As the quotation of a single amount derived by the bidder in his own manner and known as a lump sum;

b) as the quotation of a unit price derived by the bidder in his own manner and extended by an estimated quantity of units given by the Owner;

c) as the quotation of the total of several amounts set forth in the manner described above; which may comprise amounts for a basic proposal and several alternates or for several items or for several schedules.

The proposal form shall contain a brief, general description of the work to be performed for each quotation requested, but such description shall not in any way limit the Contractor's responsibility to perform completely the work required by these Contract Documents.

2. EXAMINATION OF DRAWINGS, SPECIFICATIONS, AND SITE

Before submitting his proposal, the Bidder shall examine the Contract Documents and the site of the work and ascertain for himself all the conditions relating thereto which can in any way affect the work or the cost thereof under this Contract. The Bidder further acknowledges that he has satisfied himself as to the character, quality, and quantity of surface and subsurface materials to be encountered and of materials and service to be rendered. Failure of the Bidder to acquaint himself with the necessary information will not relieve him from responsibility for estimating properly the difficulty or cost of successfully performing the work. The Owner assumes no responsibility for any interpretations or representations made by any of its officers or agents during or prior to the execution of this Contract, unless

a) Such interpretations or representations are expressly stated in the contract.

b) The contract expressly provides that the responsibility therefore is assumed by the Owner.

Representations made but not expressly stated and for which liability is not expressed assumed by the Owner in the Contract shall be deemed only for the information of the Bidder.

3. INTERPRETATION OF CONTRACT DOCUMENTS

The Contract Documents are complementary, and items called for by one shall be binding as if called for by all. The intent of the documents is to define the work required to complete the Contract. In case of conflict, the specifications will take precedence over drawings; large-scale drawings over small-scale drawings; written dimensions over scaled dimensions; Special Provisions over Technical Provisions; and Technical Provisions over General Provisions.

Any prospective bidder in doubt as to the true meaning of any part of the plans, specifications, or other documents may submit to the Owner a written request for an interpretation thereof. The Bidder submitting the request will be responsible for its prompt delivery not less than five (5) working days prior to the date set for opening of proposals.

4. QUANTITIES FOR UNIT PRICES

The quantities for which unit prices are requested in the proposal form are approximate only and do not constitute a warranty or guarantee by the Owner as to the actual quantities involved in the work. Such quantities are to be used for the purpose of comparison of proposals and determination of the Contract amount.

5. QUALIFICATION OF BIDDERS

The Bidder may be required to submit a statement of facts in detail as to his previous experience in performing similar or comparable work, and of his business and technical organization, financial resources, and plant available for use in performing the contemplated work. In determining the qualifications of a bidder, the Owner reserves the right to consider his record on previous contracts with the Owner or other agencies. If, in the opinion of the Engineer, a bidder is not qualified or a responsible bidder, the Owner may reject his proposal.

6. PREPARATION OF PROPOSALS

Each proposal shall be made on the form provided by the Owner or copy thereof, and shall be signed by the Bidder with signature in full. If the proposal is made by a partnership, it shall contain the names of each partner and shall be signed in the firm's name followed by the signature of the person authorized to sign. If the proposal is made by a corporation, it shall be signed in the name of the corporation by the officer or officers having authority to sign contracts. A price shall be provided for every item listed on the proposal. Any omission of prices on such items shown on the proposal forms; or any additions in writing to the form of the proposal; or any condition, limitation, or provisions may be cause for the rejection of the Bidder's proposal. When quotations on all items are not required, Bidders should insert the words "No Bid" in the space provided for any item for which no quotation is made.

Each proposal shall specify a unit or lump sum price, typed or written in ink in both words and figures for each of the separate items as called for. In case of discrepancies between the written words and figures, the written words shall govern. In case of error in the extension of prices, the unit price will govern. If erasures or other corrections appear on the forms, each such erasure or correction must be initialed by the person signing the proposal.

Alternate proposals will be rejected unless specifically requested by the Owner. Qualified proposals will be considered only when the Bidder submits an accompanying letter to qualify his proposal, and when in the opinion of the Engineer, it is in the best interest of the Owner to consider same.

The Contractor shall acknowledge in the space provided on the bid proposal form the receipt of any and all addendums issued by the Owner.

7. SUBMISSION OF PROPOSAL

Each proposal shall be completely sealed in a separate envelope, properly addressed to the Owner at the address indicated in the "Invitation to Bid," with the name and address of the Bidder and the name of the project and contract identification number for which the proposal is submitted plainly written on the outside of the envelope.

Proposals will be received at the time and place stated in the Invitation to Bid. It is the sole responsibility of the Bidder to see that this proposal is submitted in time. Any proposal received after the scheduled proposal opening time will not be considered, but will be held unopened until the time of award and then returned to the Bidder unless other disposition is requested or agreed to by the Bidder. No responsibility will be attached to any officer for the premature opening of or failure to open a proposal not properly addressed and identified.

Proposals shall be submitted intact, including all proposal forms, proposal guarantee, and other documents as required. Failure to include proposal guarantee or other requirements with the proposal will be sufficient reason to declare the proposal non-responsive.

8. WITHDRAWAL OR REVISION OF PROPOSALS

A bidder may withdraw, modify, or correct his proposal after it has been deposited with the Owner, providing the request for such withdrawal, modification, or correction is received by the Agent of the Owner responsible for opening bids in writing or by telegram before the time set for opening proposals, or any formal postponement thereof. The original proposal, as modified by such

written or telegraphic communication will be considered as the proposal submitted by the bidder. Telegraphic modification shall not reveal the amount of the original or revised proposal. Written confirmation of telegraphic modifications must be received within two days after the opening of bids, with postmark showing mailing prior to the bid opening. No bidder will be permitted to withdraw his proposal for thirty days after the time set for proposals to be opened.

9. OPENING OF PROPOSALS

At the time and place set for the opening of the proposals, as indicated in the "Invitation to Bid," each and every proposal submitted in accordance with these contract documents (except any which may have been withdrawn in accordance with these Specifications) received prior to the scheduled closing time for receipt of proposals, will be publicly opened and read aloud.

10. REJECTION OF PROPOSALS

The Owner reserves the right to reject any and all proposals. At the Owner's discretion any informalities and irregularitie may be waived.

11. FAMILIARITY WITH LAWS AND ORDINANCES

It is the Bidder's responsibility to be familiar with all Federal, State, Borough, and City laws and ordinances, including regulations, which in any manner affect the work. The Contractor shall not be excused in the performance of the work or any part thereof because of the Contractor's misunderstanding or lack of familiarity with such laws.

12. BIDDERS INTERESTED IN MORE THAN ONE PROPOSAL

If more than one proposal is offered by any one party, by or in the name of his clerk, partner, or other person, all such proposals will be rejected. A party who has quoted prices to a bidder is not thereby disqualified from quoting prices to other bidders, or from submitting a proposal directly for the work.

13. BID SECURITY

Each bid must be accompanied by cash, certified check of the bidder, or a bid bond prepared on the form of bid bond attached hereto, duly executed by the bidder as principal and having as surety thereon a surety company approved by the Owner, in the amount of five percent of the bid. Such cash, checks or bid bonds will be returned to all except the three lowest bidders within three days after the opening of bids, and the remaining cash, checks, or bid bonds will be returned promptly after the Owner and the accepted

bidder have executed the contract, or, if no award has been made within thirty days after the date of the opening of bids, upon demand of the bidder at any time thereafter, so long as he has not been notified of the acceptance of his bid.

14. POWER OF ATTORNEY

Attorney-in-fact who sign bid bonds or contract bonds must file with each bond a certified and effectively dated copy of their power-of-attorney.

15. LIQUIDATED DAMAGES FOR FAILURE TO ENTER INTO CONTRACT

The successful bidder, upon his failure or refusal to execute and deliver the contract and bonds required within ten days after he has received notice of the acceptance of his bid, shall forfeit to the Owner, as liquidated damages for such failure or refusal, the security deposited with his bid.

16. METHOD OF AWARD - LOWEST QUALIFIED BIDDER

If, at the time this contract is to be awarded, any bid submitted by a qualified bidder does not exceed the amount of funds then estimated by the Owner as available to finance the contract, the contract will be awarded on the basis of the lowest total bid, including any combination of alternates provided in the Bid Proposal, by a qualified bidder.

BID PROPOSAL

To: The City of Kenai, Alaska

Date: _____

Proposal of _____(hereinafter called "Bidder")* a corporation, organized and existing under the laws of the State of _____,* a partnership, or *an individual doing business as _____.

Gentlemen:

The undersigned Bidder, in compliance with your invitation for bids for the construction of water and sewer line improvements, having examined the plans and specifications with related documents and the site of the proposed work, and being familiar with all of the conditions surrounding the construction of the proposed project including the availability of materials and labor, hereby proposes to furnish all labor, materials, and supplies, and to construct the project in accordance with the contract documents, within the time set forth therein, and at the prices stated below. These prices are to cover all expenses incurred in performing the work required under the contract documents, of which this proposal is a part.

Bidder hereby agrees to commence work under this contract on or before a date to be specified in written "Notice to Proceed" of the Owner and to fully complete the project not later than . Bidder further agrees to pay as liquidated damages, the sum of for each consecutive calendar day thereafter as provided in the General Conditions.

Bidder acknowledges receipt of the following addendum:

_____

_____

_____

Bidder agrees to perform all of the construction work described in the specifications and shown on the plans, for the unit prices stated in the attached tabulation and summary.

These unit prices shall include all labor, materials, overhead, profit, insurance, etc., to cover the finished work of the several kinds called for.

* Strike out inapplicable terms.

(Unit prices are to be shown in both words and figures. In case of discrepancy, the amount shown in words will govern. In case of discrepancy between unit prices and extended totals, the unit prices shall govern.)

Bidder understands that the Owner reserves the right to reject any or all bids and to waive any informalities in the bidding.

The bidder agrees that this bid shall be good and may not be withdrawn for a period of 30 calendar days after the scheduled closing time for receiving bids.

Upon receipt of written notice of the acceptance of this bid, bidder will execute the formal contract attached within 15 days and deliver a Surety Bond as required by Paragraph G2-03 of the General Conditions. The Bid Security attached in the sum of _____

($_____) is to become the property of the Owner in the event the contract and bond are not executed within the time above set forth, as liquidated damages for the delay and additional expense to the Owner caused thereby.

Respectfully submitted:

_____
(Bidding Company)

By _____

_____
(Title)

(SEAL - if bid is by a corporation)

_____
(Alaska Contractor's Registration No.)

BID PROPOSAL

SCHEDULE 79-W1

Item No.	Estimated Quantity	Description (Write Unit Bid Price in Words)	Unit Bid Price	Total Bid Price
701	83 Lin. Ft.	Excavate and Backfill Trench 0 feet to 8 feet Depth _____ _____ _____ per linear foot		
702	1201 Lin. Ft.	Excavate and Backfill Trench 0 feet to 10 feet Depth _____ _____ _____ per linear foot		
703	4086 Lin. Ft.	Excavate and Backfill Trench 0 feet to 12 feet Depth _____ _____ _____ per linear foot		
704	536 Lin. Ft.	Excavate and Backfill Trench 0 feet to 15 feet Depth _____ _____ _____ per linear foot		
705	105 Lin. Ft.	Excavate and Backfill Trench Over 15' Depth _____ _____ _____ per linear foot		
706	1 Each	Install Fitting in Existing Water Main _____ _____ per each		

BIDDING COMPANY _____

COMPANY AGENT SIGNATURE _____

AGENT'S TITLE _____

BID PROPOSAL

SCHEDULE 79-W1 (Continued)

Item No.	Estimated Quantity	Description (Write Unit Bid Price in Words)	Unit Bid Price	Total Bid Price
707	54 Lin. Ft.	Furnish and Install 6" Ductile Iron Water Line and Fittings in Trench Class 50_____ _____ _____per linear foot		
708	6011 Lin. Ft.	Furnish and Install 10" Ductile Iron Water Line and Fittings in Trench Class 50_____ _____ _____per linear foot		
709	11 Each	Furnish and Install 10" Gate Valve and Valve Box_____ _____ _____per each		
710	6 Each	Furnish and Install L-base Fire Hydrant with Gate Valve, Valve Box, and Thaw wire, 10' Bury_____ _____ _____per each		
711	14.5 Lin. Ft.	Adjust Fire Hydrant Above or Below 10' Bury_____ _____ _____per linear foot		
712	6 Pair	Furnish and Install Guard Posts for Fire Hydrant_____ _____ _____per pair		

BIDDING COMPANY_____

COMPANY AGENT SIGNATURE_____

AGENT'S TITLE_____

BID PROPOSAL

SCHEDULE 79-W1 (Continued)

Item No.	Estimated Quantity	Description (Write Unit Bid Price in Words)	Unit Bid Price	Total Bid Price
713	1 Each	Encase Existing Sanitary Sewer _____ _____ _____ per each		
714	515 Cu. Yd.	Dispose of Unsuitable Material from Within Trench _____ _____ _____ per cubic yard		
715	130 Cu. Yd.	Excavate and Dispose of Material from Surface _____ _____ _____ per cubic yard		
716	495 Cu. Yd.	Pit Run Gravel Placed in Trench _____ _____ _____ per cubic yard		
717	150 Cu. Yd.	Pit Run Gravel Placed on Surface _____ _____ _____ per cubic yard		
718	432 Lin. Ft.	Special Backfill Compaction _____ _____ _____ per linear foot		

BIDDING COMPANY _____

COMPANY AGENT SIGNATURE _____

AGENT'S TITLE _____

BID PROPOSAL

SCHEDULE 79-W1 (Continued)

Item No.	Estimated Quantity	Description (Write Unit Bid Price in Words)	Unit Bid Price	Total Bid Price
719	35 Lin. Ft.	Remove and Replace 18" CMP Culvert, 16 Ga. Galvanized Steel _____ _____ _____ per linear foot		
720	665 Lin. Ft.	Remove and Replace Perforated Pipe Underdrain (PPU) _____ _____ _____ per linear foot		
721	2 Each	Furnish and Install Air Release Valve ____ _____ _____ per each		
722	32 Sq. Yd.	Remove and Replace A.C. Pavement _____ _____ _____ per square yard		

TOTAL BID, SCHEDULE 79-W1 _____

BIDDING COMPANY _____

COMPANY AGENT SIGNATURE _____

AGENT'S TITLE _____

BID PROPOSAL

SCHEDULE 79-S1

Item No.	Estimated Quantity	Description (Write Unit Bid Price in Words)	Unit Bid Price	Total Bid Price
801	2535 Lin. Ft.	Excavate and Backfill Sewer Trench 0 feet to 8 feet Depth _____ _____ _____ per linear foot		
802	2219 Lin. Ft.	Excavate and Backfill Sewer Trench 0 feet to 10 feet Depth _____ _____ _____ per linear foot		
803	442 Lin. Ft.	Excavate and Backfill Sewer Trench 0 feet to 12 feet Depth _____ _____ _____ per linear foot		
804	1397 Lin. Ft.	Excavate and Backfill Sewer Trench 0 feet to 15 feet Depth _____ _____ _____ per linear foot		
805	1076 Lin. Ft.	Excavate and Backfill Sewer Trench 0 feet to 20 feet Depth _____ _____ _____ per linear foot		
806	2600 Lin. Ft.	Furnish and Install 8" A.C. Sewer Pipe, Class 2400 _____ _____ _____ per linear foot		

BIDDING COMPANY _____

COMPANY AGENT SIGNATURE _____

AGENT'S TITLE _____

BID PROPOSAL

SCHEDULE 79-S1 (Continued)

Item No.	Estimated Quantity	Description (Write Unit Bid Price in Words)	Unit Bid Price	Total Bid Price
807	23 Lin. Ft.	Furnish and Install 8" DI Sewer Pipe in Trench, Class 50 _____ _____ _____ per linear foot		
808	3304 Lin. Ft.	Furnish and Install 10" A.C. Sewer Pipe Class 3300 _____ _____ _____ per linear foot		
809	36 Lin. Ft.	Furnish and Install 10" DI Sewer Pipe in Trench, Class 50 _____ _____ _____ per linear foot		
810	714 Lin. Ft.	Furnish and Install 12" Sewer Pipe in Trench, Class 50 _____ _____ _____ per linear foot		
811	988 Lin. Ft.	Furnish and Install 6" DI Sewer Pipe and Fittings in Trench, Class 50 _____ _____ _____ per linear foot		
812	85 Lin. Ft.	Furnish and Install 6" DI Pressure Sewer Pipe in Casing, Class 50 _____ _____ _____ per linear foot		

BIDDING COMPANY _____
COMPANY AGENT SIGNATURE _____
AGENT'S TITLE _____

BID PROPOSAL

SCHEDULE 79-S1 (Continued)

Item No.	Estimated Quantity	Description (Write Unit Bid Price in Words)	Unit Bid Price	Total Bid Price
813	1 Job	Furnish and Install 12" x 70 L.F. Steel Casing Under Beaver Loop (West)_____ _____ _____lump sum		
814	21 Each	Furnish and Install Sanitary Sewer Manhole, 8 foot Depth_____ _____ _____per each		
815	79.5 Lin. Ft.	Additional Depth for Manhole_____ _____ _____per linear foot		
816	3 Each	Furnish and Install Pressure Manhole_____ _____ _____per each		
817	1582 Lin. Ft.	Special Backfill Compaction_____ _____ _____per linear foot		
818	4 Each	Construct Sewer Stubout 8" x 8'_____ _____ _____per each		

BIDDING COMPANY_____
COMPANY AGENT SIGNATURE_____
AGENT'S TITLE_____

BID PROPOSAL

SCHEDULE 79-S1 (Continued)

Item No.	Estimated Quantity	Description (Write Unit Bid Price in Words)	Unit Bid Price	Total Bid Price
819	1 Each	Construct Sewer Stubout 10" x 8' _____ _____ _____ per each		
820	1535 Cu. Yd.	Dispose of Unsuitable Material from Within Trench _____ _____ _____ per cubic yard		
821	345 Cu. Yd.	Excavate and Dispose of Material from Surface _____ _____ _____ per cubic yard		
822	1315 Cu. Yd.	Pit Run Gravel Placed in Trench _____ _____ _____ per cubic yard		
823	715 Cu. Yd.	Pit Run Gravel Placed on Surface _____ _____ _____ per cubic yard		
824	1 Job	Construct Sewage Lift Station #6 _____ _____ _____ lump sum		

BIDDING COMPANY _____

COMPANY AGENT SIGNATURE _____

AGENT'S TITLE _____

BID PROPOSAL

SCHEDULE 79-S1 (Continued)

Item No.	Estimated Quantity	Description (Write Unit Bid Price in Words)	Unit Bid Price	Total Bid Price
825	1 Each	Connect Sewer Pipe to Existing Manhole _____ _____ per each		
826	1 Job	Furnish and Install New MH Barrel Section _____ _____ lump sum		
827	499 Sq. Yd.	Remove and Replace A.C. Pavement _____ _____ _____ per square yard		
828	80 Lin. Ft.	Remove and Replace Perforated Pipe Underdrain (PPU) _____ _____ _____ per linear foot		
829	235 Lin. Ft.	Remove and Replace 18" CMP Culvert 16 Ga. Galvanized Steel _____ _____ _____ per linear foot		
830	50 Lin. Ft.	Remove and Replace 24" CMP Culvert 16 Ga. Galvanized Steel _____ _____ _____ per linear foot		

TOTAL BID, SCHEDULE 79-S1 _____

BIDDING COMPANY _____
COMPANY AGENT SIGNATURE _____
AGENT'S TITLE _____

BID SUMMARY

Bid Schedule 79-W1	_____
Bid Schedule 79-S1	_____
TOTAL BID	_____

METHOD OF AWARD

Total Bid

BIDDING COMPANY_____

COMPANY AGENT SIGNATURE_____

AGENT'S TITLE_____

BID BOND

KNOW ALL MEN BY THESE PRESENTS, that we, the undersigned _____

_____as Principal, and

_____as Surety, are hereby held

and firmly bound unto_____as owner

in the penal sum of_____

for the payment of which, well and truly to be made, we hereby jointly and severally bind ourselves, our heirs, executors, administrators, successors and assigns.

Signed, this_____day of_____, 19 __.

The condition of the above obligation is such that whereas the Principal has submitted to_____a certain bid, attached hereto and hereby made a part hereof to enter into a contract in writing, for the_____

_____

_____

NOW, THEREFORE,

(a) If said Bid shall be rejected, or in the alternate,
(b) If said Bid shall be accepted and the Principal shall execute and deliver a contract in the Form of Contract attached hereto (properly completed in accordance with said Bid) and shall furnish a bond for his faithful performance of said contract, and for the payment of all persons performing labor or furnishing materials in connection therewith, and shall in all other respects perform the agreement created by the acceptance of said Bid,

then this obligation shall be void, otherwise the same shall remain in force and effect; it being expressly understood and agreed that the liability of the Surety for any and all claims hereunder shall, in no event, exceed the penal amount of this obligation as herein stated.

The Surety, for value received, hereby stipulated and agrees that the obligations of said Surety and its bond shall be in no way impaired or affected by any extension of the time within which the Owner may accept such Bid; and said Surety does hereby waive notice of any such extension.

IN WITNESS WHEREOF, the Principal and the Surety have hereunto set their hands and seals, and such of them as are corporations have caused their corporate seals to be hereto affixed and these presents to be signed by their proper officers, the day and year first set forth above.

_____(L.S)
Principal

_____
Surety

By:_____

IMPORTANT - Surety companies executing bonds must appear on the Treasury Department's most current list (Circular 570 as amended) and be authorized to transact business in the state where the project is located.

CONTRACT

THIS AGREEMENT, made this day of , 197 ,

by and between _____ , herein
(Corporate Name of Owner)

called "Owner," acting herein through its _____
(Title of Authorized Official)

and _____
STRIKE OUT (a corporation) (a partnership)
INAPPLICABLE (an individual doing business as _____
TERMS _____)

of _____, State of _____,

hereinafter called "Contractor."

WITNESSETH: That for and in consideration of the payments and agreements hereinafter mentioned, to be made and performed by the OWNER, the CONTRACTOR hereby agrees with the OWNER to commence and complete the construction described as follows:

hereinafter called the project, for the sum of _____

_____

_____ Dollars ($_____)
and all extra work in connection therewith, under the terms as stated in the General and Special Conditions of the Contract; and at his (its or their) own proper cost and expense to furnish all the materials, supplies, machinery, equipment, tools, superintendence, labor, insurance, and other accessories and services necessary to complete the said project in accordance with the conditions and prices stated in the Proposal, the General Conditions, Supplemental General Conditions and Special Conditions of the Contract, the plans, which include all maps, plats, blueprints, and other drawings and printed or written explanatory matter thereof, the specifications and contract documents therefor as prepared by **Wince - Corthell & Associates** , herein entitled the Engineer, all of which are made a part hereof and collectively evidence and constitute the contract.

The Contractor hereby agrees to commence work under this contract on or before a date to be specified in a written "Notice to Proceed" of the Owner and to fully complete the project within _____ consecutive calendar days thereafter. The Contractor further agrees to pay, as liquidated damages, the sum of $_____ for each consecutive calendar day thereafter as hereinafter provided in Paragraph G7-05 of the General Conditions.

The OWNER agrees to pay the CONTRACTOR in current funds for the performance of the contract, subject to additions and deductions, as provided in the General Conditions of the Contract, and to make payments on account thereof as provided in Paragraph G8-04, "Progress Payments, of the General Conditions.

IN WITNESS WHEREOF, the parties to these presents have executed this contract in eight (8) counterparts, each of which shall be deemed an original, in the year and day first above mentioned.

(Seal)
ATTEST:

_____
(Owner)

_____
(Secretary)

By _____

_____
(Witness)

_____
(Title)

(Seal)

_____
(Contractor)

_____
(Secretary)

By _____

_____
(Witness)

_____
(Title)

_____
(Address and Zip Code)

NOTE: Secretary of the Owner should attest. If Contractor is a corporation, Secretary should attest.

PERFORMANCE BOND

KNOW ALL MEN BY THESE PRESENTS: that

_____
(Name of Contractor)

_____
(Address of Contractor)

a _____, hereinafter called Principal, and
(Corporation, Partnership, or Individual)

_____
(Name of Surety)

_____
(Address of Surety)

hereinafter called Surety, are held and firmly bound unto _____
(Name

_____
of owner)

_____
(Address of Owner)

hereinafter called Owner, in the penal sum of _____

_____ Dollars, $(_____)

in lawful money of the United States, for the payment of which sum well and truly to be made, we bind ourselves, our heirs, executors, administrators and successors, jointly and severally, firmly by these presents.

THE CONDITION OF THIS OBLIGATION is such that whereas, the Principal entered into a certain contract with the Owner, dated the_____ day of _____, 197___, a copy of which is hereto attached and made a part hereof for the construction of:

_____

_____

_____

_____

NOW, THEREFORE, if the Principal shall well, truly and faithfully perform its duties, all the undertakings, covenants, terms, conditions, and agreements of said contract during the original term thereof, and any extensions thereof which may be granted by the Owner, with or without notice to the Surety, and if he shall satisfy all claims and demands incurred under such contract, and shall fully idemnify and save harmless the Owner from all costs and damages which it may suffer by reason of failure to do so, and shall reimburse and repay the Owner all outlay and expense which the Owner may incur in making good any default, then this obligation shall be void; otherwise to remain in full force and effect.

(Over)

PROVIDED, FURTHER, that the said Surety, for value received hereby stipulates and agrees that no change, extension of time, alteration or addition to the terms of the contract or to the work to be performed thereunder or the specifications accompanying the same shall in any wise affect its obligation on this bond, and it does hereby waive notice of any such change, extension of time, alteration or addition to the terms of the contract or to the work or to the specifications.

PROVIDED, FURTHER, that no final settlement between the Owner and the Contractor shall abridge the right of any beneficiary hereunder, whose claim may be unsatisfied.

IN WITNESS WHEREOF, this instrument is executed in six (6) counterparts, each one of which shall be deemed an original, this the _____ day of _____ 197__.

ATTEST:

_____
Principal

_____
(Principal) Secretary

(SEAL)

By _____

_____
(Address)

_____

_____
Witness as to Principal

_____
(Address)

_____

_____
Surety

ATTEST:

By _____
Attorney-in-Fact

_____
(Surety) Secretary

(SEAL)

_____
Witness as to Surety

_____
(Address)

_____
(Address)

_____

NOTE: Date of Bond must not be prior to date of Contract.
If Contractor is Partnership, all partners should execute bond.

IMPORTANT: Surety companies executing bonds must appear on the Treasury Department's most current list (Circular 570 as amended) and be authorized to transact business in the State where the project is located.

PAYMENT BOND

KNOW ALL MEN BY THESE PRESENTS: that

_____
(Name of Contractor)

_____
(Address of Contractor)

a _____, hereinafter called Principal, and
(Corporation, Partnership, or Individual)

_____
(Name of Surety)

_____
(Address of Surety)

hereinafter called Surety, are held and firmly bound unto _____
(Name

_____
of owner)

_____
(Address of Owner)

hereinafter called Owner, in the penal sum of _____

_____ Dollars, $(_____)

in lawful money of the United States, for the payment of which sum well and truly to be made, we bind ourselves, our heirs, executors, administrators and successors, jointly and severally, firmly by these presents.

THE CONDITION OF THIS OBLIGATION is such that whereas, the Principal entered into a certain contract with the Owner, dated the_____ day of _____, 197___, a copy of which is hereto attached and made a part hereof for the construction of:

_____

_____

_____

_____

NOW, THEREFORE , if the Principal shall promptly make payment to all persons, firms, subcontractors, and corporations furnishing materials for or performing labor in the prosecution of the work provided for in such contract, and any authorized extension or modification thereof, including all amounts due for materials, lubricants, oil, gasoline, coal and coke, repairs on machinery, equipment and tools, consumed or used in connection with the construction of such work, and all insurance premiums on said work, and for all labor, performed in such work whether by subcontractor or otherwise, then this obligation shall be void; otherwise to remain in full force and effect.

(Over)

PROVIDED, FURTHER, that the said Surety, for value received hereby stipulates and agrees that no change, extension of time, alteration or addition to the terms of the contract or to the work to be performed thereunder or the specifications accompanying the same shall in any wise affect its obligation on this bond, and it does hereby waive notice of any such change, extension of time, alteration or addition to the terms of the contract or to the work or to the specifications.

PROVIDED, FURTHER, that no final settlement between the Owner and the Contractor shall abridge the right of any beneficiary hereunder, whose claim may be unsatisfied.

IN WITNESS WHEREOF, this instrument is executed in six (6) counterparts, each one of which shall be deemed an original, this the _____ day of _____ 197__.

ATTEST:

_____
Principal

_____
(Principal) Secretary

(SEAL)

By _____

_____
(Address)

_____

_____
Witness as to Principal

_____
(Address)

_____

_____
Surety

ATTEST:

By _____
Attorney-in-Fact

_____
(Surety) Secretary

(SEAL)

_____
Witness as to Surety

_____
(Address)

_____
(Address)

_____

NOTE: Date of Bond must not be prior to date of Contract.
If Contractor is Partnership, all partners should execute bond.

IMPORTANT: Surety companies executing bonds must appear on the Treasury Department's most current list (Circular 570 as amended) and be authorized to transact business in the State where the project is located.

GENERAL CONDITIONS

INDEX

SECTION G1 DEFINITIONS Page G-1

G1-01	Owner	"
G1-02	Council or City Council	"
G1-03	Engineer	"
G1-04	Inspector	"
G1-05	Specifications	"
G1-06	Special Provisions	"
G1-07	Drawings	"
G1-08	Bidder	"
G1-09	Proposal	G-2
G1-10	Proposal Guarantee, Bid Bond	"
G1-11	Contract	"
G1-12	Contract Documents	"
G1-13	Contractor	"
G1-14	Subcontractor	"
G1-15	Performance and Payment Bond	"
G1-16	Surety	G-3
G1-17	Work	"
G1-18	Days	"
G1-19	Liquidated Damages	"
G1-20	"Or Equal"	"
G1-21	Abbreviations	G-4
G1-22	Final Acceptance Date	"

SECTION G2 AWARD AND EXECUTION OF CONTRACT Page G-5

G2-01	Notice of Acceptance of Proposal . . .	"
G2-02	Execution of the Contract	"
G2-03	Contract Performance and Payment . . .	"
G2-04	Additional Bond Security	G-6
G2-05	Insurance	"
G2-06	Assignment of Contract	G-8

SECTION G3 SCOPE OF WORK Page G-9

G3-01	Intent of Contract	"
G3-02	Assumption of Conditions of Work . . .	"
G3-03	Disclaimer of Limitations	"
G3-04	Increase or Decrease in Unit Price Quantities . .	"
G3-05	Drawings	G-10
G3-06	Use and Occupancy Prior to Completion of Contract . .	G-11

(INDEX, Continued)

SECTION G4 CONTROL OF WORK Page G-12

G4-01 Authority of the Engineer . . . . . "
G4-02 Cooperation by Contractor . . . . . "
G4-03 Unusual Working Hours G-13
G4-04 Stakes - Reference Points . . . . . "
G4-05 Utilities . . . . . "
G4-06 Method of Serving Notice G-15
G4-07 Final Inspection . . . . . "

SECTION G5 CONTROL OF MATERIAL Page G-16

G5-01 Source of Supply & Quality of Materials "
G5-02 Samples and Tests . . . . . "
G5-03 Submittals G-17
G5-04 Protection of Material and Work. G-18
G5-05 Correction of Work . . . . . "
G5-06 Guarantee . . . . . "

SECTION G6 CONTRACTOR'S RESPONSIBILITIES Page G-19

G6-01 Supervision by Contractor . . . . . "
G6-02 Contractor's Obligations . . . . . "
G6-03 Subcontracts . . . . . "
G6-04 Emergency Work G-20
G6-05 Permits and Licenses . . . . . "
G6-06 Patents and Royalties G-21
G6-07 Contractor's Title to Materials . . . . "
G6-08 Traffic . . . . . "
G6-09 Work on Right-of-Way G-23
G6-10 Preservation and Restoration of Property, Trees, Monuments, Etc. . . G-24
G6-11 Cleanup . . . . . "
G6-12 Water - Fire Hydrants G-25
G6-13 Equipment G-26
G6-14 Use of Explosives . . . . . "
G6-15 Disposal Area G-27
G6-16 Sanitary Facilities . . . . . "
G6-17 Preference to Local Labor . . . . . "
G6-18 Anti-Discrimination . . . . . "
G6-19 Minimum Wages G-28
G6-20 Minimum Wages (Federal) G-29
G6-21 Withholding of Payments G-30
G6-22 Payrolls and Basic Records G-31
G6-23 Apprentices . . . . . "

(INDEX, Continued)

(Section G6, cont.)

G6-24	Compliance with Copeland Anti-Kickback Act & Regulations . .	G-32
G6-25	Overtime	"
G6-26	Interest of Member of or Delegate to Congress	G-33
G6-27	Other Prohibited Interests	"
G6-28	Provisions Required by Law Deemed Inserted	"
G6-29	Industrial Safety - OSHA Alaska Plan. .	G-34
G6-30	Convenience of the Public and the Owner.	"
G6-31	Reports, Records and Data	"

SECTION G7 PROSECUTION AND PROGRESS Page G-35

G7-01	Notice to Proceed	"
G7-02	Progress Schedule and Requirements for Overtime Work	"
G7-03	Suspension of Work	"
G7-04	Suspension of Work for an Extended Period	G-36
G7-05	Time for Completion and Liquidated Damages	G-38
G7-06	Final Acceptance	G-39
G7-07	Right of Owner to Terminate Contract .	G-40

SECTION G8 MEASUREMENT AND PAYMENT Page G-41

G8-01	Measurement	"
G8-02	Scope of Payment	"
G8-03	Payment for Extra Work	"
G8-04	Progress Payments	G-42
G8-05	Payments by Contractor	G-43
G8-06	Owner's Right to Withhold Certain Amounts and Make Application Thereof	"
G8-07	Retained Percentage	G-44
G8-08	Final Payment	"
G8-09	Claims for Damage	G-45

SECTION G1 DEFINITIONS

In the interpretation of the Contract Documents, the following words, terms, and abbreviations, or pronouns in place of them, shall be construed as defined below:

G1-01 OWNER

The City of Kenai, Alaska, acting through its legally constituted officials, officers, or employees.

G1-02 COUNCIL OR CITY COUNCIL

Shall mean the City Council of the City of Kenai.

G1-03 ENGINEER

Shall mean the Engineer for the Owner or the Chief Engineer for the agency of the Owner having jurisdiction over the Contract.

G1-04 INSPECTOR

The inspector or inspectors of the Owner who are placed in supervision of any part of the inspection with authority limited to the particular duties entrusted by the Engineer.

G1-05 SPECIFICATIONS

The direction and requirements of the Specifications as contained herein, as supplemented by such special provisions as may be provided, pertaining to the manner of performing the work or the quantities and the quality of materials to be furnished under the Contract.

G1-06 SPECIAL PROVISIONS

The Special Provisions are contract requirements peculiar to the project and which are not set forth elsewhere.

G1-07 DRAWINGS

The official drawings, profiles, typical cross-sections and supplemental drawings or reproductions thereof, approved by the Owner, which indicate the location, character, dimensions, and details of work to be performed. All such documents are to be considered as a part of the plans whether attached to the specifications or separate therefrom.

G1-08 BIDDER

An individual, firm, partnership, corporation, or combination thereof submitting a proposal for the work contemplated and acting directly or through a duly authorized representative.

G1-09 PROPOSAL

The written offer, or copy thereof, of the bidder to perform the work for a certain fee.

G1-10 PROPOSAL GUARANTEE, BID BOND

Cash, bid bond, cashier's check or certified check accompanying the proposal submitted by the bidder as a guaranty that he will enter into a contract for a certain fee stipulated in the proposal.

G1-11 CONTRACT

The written agreement executed by both parties covering the performance of the work.

G1-12 CONTRACT DOCUMENTS

The Contract Documents shall include, but not be limited to, Invitation to Bid, Proposal, Contract Performance and Payment Bond, Contract, Drawings, Specifications, Special Provisions, and all supplemental agreements required to complete the work. Supplemental agreements are written agreements covering alterations, amendments, or extensions to the contract and will include change orders.

G1-13 CONTRACTOR

The individual, firm, partnership or corporation, and his, their, or its heirs, executors, administrators, successors, and assigns, or the lawful agent of any such individual, firm, partnership, covenantor or corporation, or his, their or its surety under the Contract Bond, constituting one of the principals to the Contract and undertaking to perform the work herein specified. Where any pronoun is used as referring to the word "Contractor," it shall mean the Contractor as defined above.

G1-14 SUBCONTRACTOR

A person, firm or corporation supplying labor and materials or only labor for work at the site of the project for, and under separate contract or agreement with, the Contractor.

G1-15 PERFORMANCE AND PAYMENT BOND

The approved form of security furnished by the Contractor and his surety as required in the Contract. It shall guarantee that such person or persons who enter into contract with the Owner shall faithfully perform all the provisions of the Contract and complete the work in strict accordance with the Contract Documents including full payment for labor and material used in the work.

G1-16 SURETY

The sureties or surety company responsible for the bidders in the execution of the Contract, or which is bound with and for the Contractor to insure performance of the work, the payment of all obligations pertaining to the work, and the fulfillment of such other conditions as may be specified or required by law.

G1-17 WORK

All the work specified, indicated, shown or contemplated in the Contract to construct the improvements, including all alterations, amendments or extensions thereto made by the Contract Change Order or other written orders of the Engineer. The term "Work" as used in these Contract Documents shall include, but is not limited to, the provision and payment for all materials and goods, labor, services, and facilities of every nature whatsoever required to complete this project in accordance with the explicit and implied intent of these Contract Documents.

G1-18 DAYS

(a) Calendar: Unless otherwise designated, days as used in the Contract Documents will be understood to mean calendar days.

(b) Working: A working day is defined as any day not otherwise defined herein as a non-working day.

(c) Non-Working: A non-working day is defined as Saturday, Sunday, a recognized holiday, a day on which the Contractor is specifically required by the Special Provisions to suspend construction operations or a day on which a suspension order is in effect. Recognized holidays shall be: January 1, February 22, May 30, July 4, Labor Day, Veterans Day, Thanksgiving Day, and December 25. When any of the above days falls on a Saturday, the preceding Friday shall be counted as a holiday. When any of the above days falls on a Sunday, the following Monday shall be counted as a holiday.

G1-19 LIQUIDATED DAMAGES

The amount prescribed herein to be paid to the Owner, or to be deducted from any payments due or to become due the Contractor, for each day's delay in completing the whole or any specified portion of the work beyond the time allowed in the specifications.

G1-20 "OR EQUAL"

Whenever a material, article, or piece of equipment is identified on the plans or in the specifications by reference to manufacturers' or vendors' names, trade names, catalog numbers, etc.,

(G1-20 "OR EQUAL", cont.)

it is intended merely to establish a standard; and any material, article, or equipment of other manufactures and vendors which will perform adequately the duties imposed by the general design will be considered equally acceptable provided the material, article, or equipment so proposed, is, in the opinion of the Engineer, of equal substance and function.

G1-21 ABBREVIATIONS

ASTM	American Society for Testing and Materials
AWWA	American Water Works Association
ANSI	American National Standards Institute
AASHTO	American Association of State Highway and Transportation Officials
APWA	American Public Works Association
NEC	National Electrical Code

Whenever reference is made to the Standard Specifications issued by the above groups, it is understood to refer to the latest revision or amendment thereto.

G1-22 FINAL ACCEPTANCE DATE

The date of final acceptance shall be the date that the work has been inspected and accepted by the Owner.

SECTION G2 - AWARD AND EXECUTION OF CONTRACT

G2-01 NOTICE OF ACCEPTANCE OF PROPOSAL

The notice of acceptance of a proposal will be a notice in writing signed by a duly authorized representative of the Owner. The acceptance of a proposal shall bind the successful bidder to execute the contract and be responsible for liquidated damages as provided herein.

G2-02 EXECUTION OF THE CONTRACT

(1) By the Contractor

(a) The bidder whose proposal is accepted shall submit to the Owner five (5) copies of the Performance and Payment Bond and the proof of insurance, as required by these contract documents, within ten (10) working days of the time of his receipt of the Notice of Acceptance. Bonds executed by an attorney-in-fact shall be accompanied by a power of attorney.

(b) The bidder whose proposal is accepted shall execute the contract within ten (10) working days after presentation of the contract for signature. The contract shall be deemed to be executed, by the successful bidder, when five (5) copies of the contract, signed by the successful bidder, and the bond and proof of insurance required herein, are received by the Owner. Failure or neglect to execute the contract shall constitute a breach of the agreement effected by the acceptance of the proposal. The damages to the Owner for such a breach shall include loss from interference with the general public works program of the Owner, and other items whose accurate amount would be difficult or impossible to compute. The amount of the proposal guarantee of the successful bidder who fails or neglects to execute the contract after proper notification of the acceptance of the bid, shall be retained by the Owner as liquidated damages for such breach.

(2) By the Owner

The contract shall be deemed to be completely executed when five (5) copies thereof, accompanied by the required bond, liability, and other necessary insurance, and signed by the Contractor, are executed by the Owner.

G2-03 CONTRACT PERFORMANCE AND PAYMENT BONDS

The Contractor agrees to furnish on a form provided by the Owner, contract performance and payment bond for the full amount of the contract, with good and sufficient surety, or sureties, qualified to do business in the State, and acceptable to the Owner.

All alterations, extensions of time, extra and additional work, and other changes authorized by the Contract Documents may be made without securing the consent of the surety, or sureties, of the contract bonds.

G2-04 ADDITIONAL BOND SECURITY

If any surety, upon any bond furnished in connection with this contract becomes unacceptable to the Owner, or if any such surety fails to furnish reports as to his financial condition as requested by the Engineer, the Contractor shall promptly furnish such additional security as may be required to protect the interests of the Owner and of persons supplying labor and materials in the prosecution of the work by the Contractor.

G2-05 INSURANCE

(a) General: The Contractor shall not commence work until he has obtained all insurance required under this section or until he has satisfied the Owner in this respect; nor shall he allow any subcontractor to commence work until he also has obtained similar insurance which is applicable to his work. The Contractor shall maintain insurance throughout the life of this Contract as will hold the Owner harmless and shall indemnify the Owner for any losses arising out of the Contractor's operations, or his subcontractor's operations, including any contingent liability arising therefrom.

The Owner, its officers, agents (including the Engineer) and employees, shall be named as an additional interest under said policy or policies.

(b) Workmen's Compensation Insurance: The Contractor shall obtain and maintain during the life of this Contract, workmen's compensation accident insurance for all employees who will work on this project, and if any work is sublet, the Contractor shall require the subcontractor similarly to provide such insurance for all of the latter's employees unless they are included under the protection afforded by the Contractor. If employees engaged in hazardous work are not protected under the AS23.30, by workmen's compensation insurance, the Contractor and any subcontractor who is affected must provide compensation insurance with a private company which in amount shall be equivalent to that provided by the Alaska workmen's compensation insurance for the protection of employees who are not so engaged.

(c) Public Liability, Property Damage and Vehicle Liability Insurance: The Contractor shall obtain and maintain in force during the life of this Contract such public liability and property-damage insurance as shall protect the Owner and the Contractor against losses which may result from claims for damages for personal injury, including accidental death, as well as from claims for property damages, which may arise from any operations under this Contract, whether such operations be those of the Contractor, a subcontractor or anyone directly or indirectly

employed by either of them and the amount of such insurance shall be as follows unless modified by the Special Provisions of these specifications.

Public Liability Insurance shall be in an amount not less than Two Hundred Fifty Thousand Dollars ($250,000) for injuries, including accidental death to any one person, and subject to the same limit for each person, in an amount not less than Five Hundred Thousand Dollars ($500,000) on account of one accident; Property Damage Insurance shall be in an amount not less than Fifty Thousand Dollars ($50,000) for any one accident and subject to that limit per accident a total (or aggregate) limit of not less than One Hundred Thousand Dollars ($100,000) for all damages arising out of injury to or destruction of property during the policy period.

(d) Subcontractor's Public Liability and Property Damage Insurance and Vehicle Liability Insurance: The Contractor shall either (1) require each of his subcontractors to procure and to maintain during the life of his subcontract, Subcontractor's Public Liability and Property Damage Insurance and Vehicle Liability Insurance of the type and in the amounts specified in subparagraph (c) hereof or, (2) insure the activities in his policy, specified in subparagrph (c) hereof.

(e) Scope of Insurance and Special Hazards: The insurance required under subparagraphs (c) and (d) hereof shall provide adequate protection for the Contractor and his subcontractors, respectively, against damage claims which may arise from operations under this contract, whether such operations be by the insured or by anyone directly or indirectly employed by him and, also against any of the special hazards which may be encountered in the performance of this contract as may be enumerated in the Special Conditions.

(f) Builder's Risk Insurance (Fire and Extended Coverage): Until the project is completed and accepted by the Owner, the Contractor is required to maintain Builder's Risk Insurance (fire and extended coverage) on a 100 percent completed value basis on the insurable portion of the project for the benefit of the Owner, the Contractor, subcontractors as their interests may appear. This provision shall not release the Contractor from his obligation to complete, according to plans and specifications, the project covered by the contract, and the Contractor and his Surety shall be obligated to full performance of the Contractor's undertaking.

(Section G2 AWARD AND EXECUTION OF CONTRACT, cont.)

(g) Proof of Carriage of Insurance: The Contractor shall furnish the Owner with certificates showing the type, amount, class of operations covered, effective dates and date of expiration of policies. Such certificates shall also contain substantially the following statement: "The insurance covered by this certificate will not be cancelled or materially altered, except after ten (10) days written notice has been received by the Owner."

G2-06 ASSIGNMENT OF CONTRACT

Neither party to the Contract shall assign the Contract nor subcontract it as a whole without the written consent of the other, nor shall the Contractor assign any monies due or to become due to him hereunder without the previous consent of the Owner. This provision shall not preclude the Contractor from subcontracting parts of the work as herein provided.

SECTION G3 - SCOPE OF WORK

G3-01 INTENT OF CONTRACT

The Contractor shall provide and pay for all the materials, labor, services, and facilities of every nature whatsoever necessary to complete the work in accordance with the explicit and implied intent of the Contract Documents.

G3-02 ASSUMPTION OF CONDITIONS OF WORK

(a) Work: The Contractor shall take all responsibility for accomplishing the work, and conditions of weather, site, or other unforeseen conditions shall not relieve him of the obligation to complete the work.

(b) Claims for Weather: The Contractor shall have no claims against the Owner for damages for any injury to the work, materials, or equipment, due to or resulting from the action of the elements. If, however, in the opinion of the Engineer, the Contractor has made all reasonable efforts to protect the materials, equipment and work, he may be granted reasonable time to make proper repairs, renewals and replacements of the work, materials or equipment damages. The Contractor shall bear all expense thus incurred.

G3-03 DISCLAIMER OF LIMITATIONS

The Contractor shall perform all work in accordance with these Contract Documents, but the Contract Documents shall not be construed in any way as limiting the Contractor's responsibility to perform the work completely, nor shall any prior customs or practices be held to constitute a waiver of these Contract Documents or any portion thereof.

G3-04 INCREASE OR DECREASE IN UNIT PRICE QUANTITIES

The Owner reserves the right to make such alterations in the drawings or in the quantities of work as may be considered necessary. Such alterations shall be in writing by the Engineer and shall not be considered as a waiver of any conditions of the contract nor to invalidate any of the provisions thereof; provided, however, that the execution of a supplemental agreement, acceptable to both parties of the contract, will be necessary before any alteration is made which involves:

(1) An extension or shortening of the length of the project by more than 25 percent.

(2) An increase or decrease of more than 25 percent of the total cost of the work calculated from the original proposal quantities and the unit contract prices.

(3) An increase or decrease of more than 25 percent in the quantity of any one major contract item.

For condition (3) above, a major item is defined as any item, unless otherwise indicated on the drawings or designated in the Special Provisions, for which the contract price amounts to 10 percent or more of the total contract price as determined by the actual quantities and the unit contract prices.

G3-05 DRAWINGS

(a) Ownership: Except the Contractor's executed set, all drawings and contract documents shall remain the property of the Owner. The Engineer will furnish the Contractor, without charge, necessary sets of drawings and specifications. Said drawings are not to be used on other work, and all sets shall be returned to the Engineer, upon request, at the completion or cessation of the work or termination of the contract. All models will be the property of the Owner.

(b) Scope of Work: The general character and scope of the work is illustrated by the drawings listed in the contract documents. Such additional detail drawings as the Engineer may deem necessary will be furnished to the Contractor as required by the work. The Contractor shall prepare and submit to the Engineer a schedule showing the dates at which the various detail drawings will be required by him; and the Contractor shall not attempt to construct the parts of the work for which such detail drawings are required until he has received them.

(c) Conformity with Drawings: All finished construction shall conform to the lines, grades, sections and dimensions shown on the approved drawings, unless due to the exigencies of construction, or other reasons, it is found desirable to make changes. The necessity or desirability of any such changes will, in all cases, be determined by the Engineer.

(d) Similar: Where the word "similar" occurs on drawings, it shall be interpreted in its general sense and not as meaning identical. All details shall be worked out in relation to their location and their connection to other parts of the work.

(Section G3 - SCOPE OF WORK, cont.)

(3) Details: Where on any of the drawings a portion of the work is drawn out and the remainder is indicated in outline, the parts drawn out shall apply also to all other like portions of the work. Where ornament or other detail is indicated by starting only, such detail shall be continued throughout the courses or parts in which it occurs and shall also apply to all other similar parts in the work, unless otherwise indicated.

G3-06 USE AND OCCUPANCY PRIOR TO COMPLETION OF CONTRACT

The Owner reserves the right to use and occupy any portion of the project which has been substantially completed; but such use and occupancy shall not be construed as an acceptance of any portion of the work; and any claims which the Owner may have against the Contractor shall not be deemed to have been waived by such occupancy.

SECTION G4 - CONTROL OF THE WORK

G4-01 AUTHORITY OF THE ENGINEER

(a) All the work shall be under the technical supervision of the Engineer. The Engineer shall decide all questions of fact which may arise as to the prosecution of work.

(b) The work is subject to inspection by the Engineer or his appointed inspectors to insure strict compliance with the terms of the contract documents. No inspector is authorized to change any provision of the plans or specifications without written authority of the Engineer, nor shall the presence or absence of an inspector relieve the Contractor from any requirements of the contract documents.

(c) The Engineer shall furnish additional instructions consistent with the contract documents that may be necessary for the proper execution of the work. The Engineer shall have authority to make changes in the work not involving extra cost and to order that extra work be done.

(d) The Engineer shall have authority to suspend the work wholly, or in part, for such period or periods as he may deem necessary. The Contractor shall not suspend the work without authority from the Engineer, and shall proceed with the work promptly when notified by the Engineer to resume operations.

(e) The Engineer and his representatives shall, at all times, have access to the work, wherever it is in preparation or in progress; and the Contractor shall provide proper facilities for such access and inspection.

(f) The authority of the Engineer to require departure from normal or specified procedures shall in no case be construed as creating an obligation on the Engineer's part to issue such orders and failure to exercise such authority shall not relieve the Contractor from liability for any damage to property or persons arising from or occasioned by the negligence, or otherwise growing out of failure on the part of the Contractor to depart from normal practice in such instances.

G4-02 COOPERATION BY CONTRACTOR

The Owner may undertake or award other Contracts for additional work, and the Contractor shall fully cooperate with such other Contractors and Owner's employees and carefully fit his own work or such additional work as may be directed by the Engineer. The Contractor shall not commit or permit any act which will interfere with the performance of work by any other Contractor or by Owner employees.

If any part of the Contractor's work depends upon the proper execution or upon the work of any other Contractor, the Contractor shall inspect and promptly report to the Engineer any defects in such work zhat renders it unsuitable for his work materials or purposes. His failure to so inspect and report such defects shall constitute an acceptance on his part of the other Contractor's work as being fit and proper for the reception of his work, except as to defects which may develop in the other Contractor's work after the execution of his work.

G4-03 UNUSUAL WORKING HOURS

The Contractor shall give the Engineer forty-eight (48) hours advance notice of his intention to work overtime, nights, Sundays or holidays, or any time outside the usual working hours. In no case will the Contractor do any such work without first notifying the Engineer to permit arrangements for proper inspection. The Contractor shall reimburse the Owner for extraordinary costs incurred by the Owner, arising out of such unusual working hours.

G4-04 STAKES - REFERENCE POINTS

Necessary stakes for completion of the work will be placed initially by the Engineer to show the location and grade of the work. Detail of stakes to be placed by the Engineer will be given in the special or technical provisions for each type of construction. The Contractor shall give the Engineer forty-eight (48) hours notice (not including Saturdays, Sundays, or holidays) of stakes required. The Contractor shall provide reasonable and necessary opportunities and facilities for the Engineer to set points and make measurements. It shall be the Contractor's responsibility to insure that all work is being done in strict conformity with these points and that these reference points, stakes, bench marks, or such, be carefully preserved. In case of their willful or careless disturbance or destruction after once having been established for any portion of the work, they may be replaced by the Engineer at his discretion. The expense of replacement will be deducted from any amounts due or to become due that Contractor, and the Contractor will be held responsible for any mistakes arising from their unnecessary loss or disturbance.

G4-05 UTILITIES

Underground utilities of record will be shown on the construction plans insofar as it is possible to do so. These, however, are shown for convenience only; and the Owner assumes no responsibility for improper location or failure to show utility locations on the construction plans. The Contractor shall take adequate and proper measure to inform himself as to the existence and location of any and all underground utilities apt to be encountered during his operation and shall protect the same against damage.

(G4-05 UTILITIES, cont.)

If any pipes, conduits, poles, wires, or apparatus are damaged, the Contractor shall immediately notify the Engineer and the utility company involved. The damage shall be repaired by the authorities having control of same at the Contractor's expense.

Whenever any underground utility is to be exposed and the exact location and depth is not known, the utility company shall be notified and excavation by the Contractor shall not commence until a representative of the utility company is present to aid the Contractor in the location of the utility. Whenever a utility is exposed by trenching, it shall be hand backfilled with material specified by the utility and compacted in a manner approved by the Engineer prior to machine backfilling.

Whenever the plans and specifications require connections to be made to public or private utility lines or services, the Contractor shall be responsible for making any necessary arrangements with such utility companies.

The requirements and instructions given in the remaining subparagraphs of this paragraph shall apply only to work performed in a public right-of-way or easement and shall not apply to work done on a building site of a structure.

Prior to awarding the contract, the Owner will notify all affected utilities to move such of their installations as would be within the confines of the finished improvement. This kind of work by the utilities will normally have been accomplished in most instances before the Contractor is working at points affected. Under some circumstances, however, the work of the utilities may have to be performed during the construction. It shall be the responsibility of the Contractor to coordinate his work with that of the utilities in such a manner as to cause the least possible interference.

It is the intent of the plans that no utility, public or private, within right-of-way or easements shall be moved to accommodate the Contractor's equipment or his method of operation when such utility does not interfere with the improvement under construction unless the cost of such removal and replacement shall be at the expense of the Contractor. The Engineer shall determine if an existing utility must be moved and the utility would then be moved by the utility company having jurisdiction over the same at no charge to the Contractor. The Engineer will not determine that an existing utility must be moved unless it cannot be guyed, shored, braced, or bypassed by ordinary procedures.

G4-06 METHOD OF SERVING NOTICE

Any written notice to the Contractor which may be requisite under these specifications may be served on him, either personally or by mailing, or by leaving at his last address known to the Owner.

Any written notice to the Owner which may be requisite under these specifications may be served on the Engineer, either personally or by certified mail.

G4-07 FINAL INSPECTION

Upon completion of the work covered by the contract, the Contractor shall notify the Engineer in writing that the work is complete. The Engineer shall within ten (10) days after such notification, make his final inspection. If the work is found to be acceptable to the Engineer and complete in accordance with the plans and specifications, the Engineer will so report to the Owner recommending acceptance of the work and payment to the Contractor of the amounts due him in accordance with the terms of the contract. If the work is not acceptable to the Engineer, he shall advise the Contractor as to the particular defects to be remedied and the Contractor shall forthwith make good such defects or defective or incomplete work in a manner acceptable to and subject to the approval of the Engineer. Nothing herein shall be construed to preclude a subsequent inspection by the Owner.

SECTION G5 - CONTROL OF MATERIAL

G5-01 SOURCE OF SUPPLY AND QUALITY OF MATERIALS

At the option of the Engineer, the source of supply of each of the materials shall be approved by the Engineer before the delivery is started. If, after trial, it is found that sources of supply which have been approved do not furnish a uniform product or if the product from any source proves unacceptable at any time, the Contractor shall furnish approved material from other approved sources. The Contractor shall submit representative samples of the goods when required by the Engineer. Any of the materials proposed to be used may be inspected or tested at any time during their preparation and use.

If, in the opinion of the Engineer, a material proposed for use by the Contractor is not equal or equivalent to a material referred to in these specifications, the burden of proof of equality shall lie with the Contractor or supplier. A manufacturer's certificate does not necessarily constitute proof of equality. A statement by an independent laboratory or testing agency, wherein an actual comparison between the two materials has been made, may, at the option of the Engineer, constitute acceptable proof of equality. Performance data shall be accepted over a comparative chemical analysis; (i.e. comparison of resistance to abrasion, corrosive materials, impact, thermal shock, chalking, fading, etc., would be more acceptable than a description or analysis of its physical or chemical make-up).

G5-02 SAMPLES AND TESTS

All tests of materials furnished by the Contractor shall be made by the Engineer in accordance with commonly recognized standards of national organizations and such special methods and tests as are in use at the testing laboratories designated by the Engineer. Test samples shall be furnished, prepared, and delivered to the designated laboratory at the expense of the Contractor. Additional tests of materials in continuing use may be required periodically by the Engineer.

Field tests of materials will also be made by the Engineer when deemed necessary and these tests shall be made in accordance with standard practices. When the results of the field tests do not conform to the requirements of the specifications, the retests required by the Engineer shall be at the expense of the Contractor.

Should it be considered necessary or advisable by the Engineer at any time before final acceptance to make an examination of work already completed by uncovering, removing, or tearing out same, the Contractor shall, on request of the Engineer, promptly furnish all necessary facilities, labor, and materials. If such work is found defective or nonconforming in any material respect due to the fault of the Contractor or his subcontractors, the Contractor shall defray all the costs connected with the examination and satisfactory reconstruction. If, however, such work is found to meet the requirements of the Contract, the actual direct cost of labor and materials involved in the examination and

replacement plus fifteen (15) percent shall be allowed the Contractor. If the completion of the work has been delayed by this examination, the Contractor will be allowed a suitable time extension.

G5-03 SUBMITTALS

The Contractor shall submit for approval of the Engineer five (5) copies of all shop and setting drawings and schedules required for the work, and no work shall be fabricated or equipment installed by the Contractor, save at his own risk, until such approval has been given.

The Contractor shall submit all drawings and schedules sufficiently in advance of construction requirements to allow ample time for checking, correcting, resubmitting and rechecking; and no claim by the Contractor for delays, arising from his failure in this respect shall be allowed.

All submittals must bear the stamp of approval of the Contractor as evidence that said submittals have been checked by the Contractor. Any submittal not bearing the Contractor's stamp of approval will be returned to the Contractor for resubmission. If the submittals show variations from the requirements of the contract documents, the Contractor shall make specific mention of such variation in his letter of transmittal in order that, if acceptable, suitable action may be taken for proper adjustment; otherwise, the Contractor shall not be relieved of the responsibility for executing the work in accordance with the contract documents, even though such submittals have been approved.

Where a submittal indicates a departure from the contract which the Engineer deems to be a minor adjustment, in the interest of the Owner, the Engineer may approve the submittal, but the approval shall contain, in substance, the following notations:

> "The modification shown or indicated on the subject submittal is approved in the interest of the Owner to effect an improvement for the project and is accepted with the understanding that it does not involve any change in the contract price or time; that it is subject generally to all contract stipulations and covenants; and that it is without prejudice to any and all rights of the Owner under the contract and bond or bonds."

G5-04 PROTECTION OF MATERIAL AND WORK

The Contractor shall at all times protect and preserve all materials, supplies and equipment of every description including property which may be furnished by the Owner and all work performed. All instructions by the Engineer to enclose or specially protect or to insure such property or work shall be complied with. If, as determined by the Engineer, material, equipment, supplies, and work performed are not adequately protected by the Contractor, such property may be protected by the Owner and the cost thereof may be charged to the Contractor or deducted from any payments due him.

G5-05 CORRECTION OF WORK

All work, all materials, whether incorporated in the work or not, all processes of manufacture, and all methods of construction shall be at all times and places subject to the inspection of the Engineer who shall be the final judge of the quality and suitability of the work, materials, processes of manufacture, and methods of construction for the purposes for which they are used. Should they fail to meet his approval they shall be forthwith reconstructed, made good, replaced and/or corrected, as the case may be, by the Contractor at his own expense. Rejected material shall immediately be removed from the site. If, in the opinion of the Engineer, it is undesirable to replace any defective or damaged materials or to reconstruct or correct any portion of the work injured or not performed in accordance with the Contract Documents, the compensation to be paid to the Contractor hereunder shall be reduced by such amount as in the judgment of the Engineer shall be equitable.

G5-06 GUARANTEE

Unless otherwise provided elsewhere in the contract documents, the Contract shall include a guarantee by the Contractor that the materials, workmanship, and performance of the materials and accessories furnished by him will be as specified and that they and the installation of them will be satisfactory to the Owner for the purpose intended for a period of one year after the final acceptance of the Contract. No provision in the Contract Documents, approval of the final pay estimate, or partial or entire use or occupancy of the premises by the Owner shall constitute an acceptance of work not done in accordance with the Contract Documents, nor shall it relieve the Contractor of liability in respect to any express warranties or responsibility for faulty materials or workmanship.

SECTION G6 - CONTRACTOR'S RESPONSIBILITIES

G6-01 SUPERVISION BY CONTRACTOR

The Contractor shall give his personal superintendence to the work or have a competent foreman or superintendent, satisfactory to the Engineer, on the jobsite at all times during progress of the work. The superintendent shall represent the Contractor in his absence, and shall have authority to act for him. The superintendent shall not be changed until advance notice has been given the Engineer. Only competent and responsible superintendents, foremen and workmen shall be employed.

The Engineer may demand the dismissal of any person or persons employed by the Contractor in, about, or upon the work who shall misconduct himself, be incompetent, or negligent in the due and proper performance of his or their duties, or who neglects or refuses to comply with the directions given, or whose continued employment in the opinion of the Engineer, may be detrimental to the Owner. Any such person shall not be re-employed on the work without the written consent of the Engineer.

G6-02 CONTRACTOR'S OBLIGATIONS

The Contractor shall and will, in good workmanlike manner, do and perform all work and furnish all supplies and materials, machinery, equipment, facilities and means, except as herein otherwise expressly specified, necessary or proper to perform and complete all the work required by this contract, within the time herein specified, in accordance with the provisions of this contract and said specifications and in accordance with the plans and drawings covered by this contract any and all supplemental plans and drawings, and in accordance with the directions of the Engineer as given from time to time during the progress of the work. He shall furnish, erect, maintain, and remove such construction plant and such temporary works as may be required.

The Contractor shall observe, comply with, and be subject to all terms, conditions, requirements, and limitations of the contract and specifications, and shall do, carry on, and complete the entire work to the satisfaction of the Engineer and the Owner.

G6-03 SUBCONTRACTS

(a) Percentage General: The Contractor shall perform on the site and with his own organization, work equivalent to at least forty percent (40%) of the total amount of the contract price. The cost of material installed by skilled and unskilled labor carried on the Contractor's own payroll may be included in the forty percent (40%).

(G6-03 SUBCONTRACTS, cont.)

(b) Subcontractors: The Contractor shall not award any work to any subcontractor without prior written approval of the Engineer. The Contractor shall notify the Engineer, in writing, of the names of all subcontractors, together with a summary of the extent and character of the work to be done by each subcontractor and to provide a copy of the executed contract. If at any time during the progress of the work, the Engineer determines that any subcontractor is incompetent or undesirable, he will notify the Contractor accordingly and immediate steps by the Contractor will be taken for cancellation of such subcontract. Subletting by subcontractors shall be subjected to the same regulations.

(c) Responsibility for Subcontractor: The Contractor shall be fully responsible to the Owner for the acts and omissions of his subcontractors, and of persons either directly or indirectly employed by them as he is for the acts and omissions of persons directly employed by him.

(d) Provisions in Subcontracts: The Contractor shall cause appropriate provisions to be inserted in all subcontracts relative to the work to bind subcontractors to the Contractor by the terms of the contract documents insofar as applicable to the work of subcontractors and to give the Contractor the same power as regards terminating any subcontract that the Owner may exercise over the Contractor under any provision of the contract documents.

(e) Contractual Relationship: Nothing contained in the contract documents shall create any contractual relation between any subcontractor and the Owner.

G6-04 EMERGENCY WORK

In an emergency affecting the safety of life or property, the Contractor, without special instructions or authorization from the Owner, shall act to prevent such threatened loss or injury; or he shall so act, if instructed to do so by the Engineer. Any compensation claimed by the Contractor on account of such emergency work, shall be determined by the Engineer.

G6-05 PERMITS AND LICENSES

The Contractor and/or Subcontractors shall procure and pay for all permits and licenses necessary for the prosecution of the work. It shall be the Contractor's responsibility to insure that all permits and licenses required of him and his subcontractors are obtained.

G6-06 PATENTS AND ROYALTIES

The Contractor agrees to indemnify the Owner and its officers, agents and employees against liability, including costs and expenses, for infringement upon any letter Patent of the United States, arising out of the performance of this contract, or out of the use or disposal by or for the account of the Owner of supplies furnished or construction work performed hereunder.

If the Contractor has information that the process or articles specified is an infringement of a patent, he shall be responsible for any such loss unless he promptly gives such information to the Engineer.

G6-07 CONTRACTOR'S TITLE TO MATERIALS

No materials or supplies for the work shall be purchased by the Contractor or by any Subcontractor subject to any chattel mortgage or under a conditional sale contract or other agreement by which an interest is retained by the seller. The Contractor warrants that he has good title to all materials and supplies used by him in the work, free from all liens, claims or encumbrances.

G6-08 TRAFFIC

All streets shall be kept open to vehicular traffic whenever practical and streets will be closed only as approved by the Engineer. The Contractor shall so conduct his operations as to offer the least possible inconvenience to the public, and he shall have under construction no greater length or amount of work than he can prosecute properly with due regard to the rights of the people. Local traffic shall be provided access to private properties at all times except when it is impractical to carry on construction and maintain traffic simultaneously, such as, for the placing of asphaltic concrete pavement, or deep utility excavations which prohibit safe travel of vehicular traffic. Emergency traffic such as police fire, and disaster units shall be provided reasonable access at all times. No two adjacent parallel streets may be closed to emergency traffic at one time. Unless extreme emergency conditions exist, construction or maintenance operations which will result in the narrowing or closing of the traveled way of any arterial street will not commence until after the morning peak-hour traffic. The Contractor shall give the Engineer forty-eight (48) hours advance notice (excluding Saturdays, Sundays, and holidays) before closing any street or performing major work on these streets. It will be the Contractor's responsibility to notify the Engineer daily of any change in plans to close or open any street or alley regardless of the length of time the street or alley is to be closed or opened.

(G6-08 TRAFFIC, cont.)

It will be the Contractor's responsibility to maintain all detour routes, haul routes, and streets under construction. This includes grading, dust control, and minor drainage work necessary to keep the streets or roads in good condition throughout the construction period. Detour routes and haul routes must be approved by the Engineer in advance and shall be left in a condition at least equal to their condition immediately prior to being opened by the Contractor. Any gravel required for the detour shall be incidental to the contract. Detours shall be capable of carrying two lanes of traffic at a minimum speed of 20 miles per hour.

The Contractor shall at his own expense and without further orders provide, erect, and maintain barricades, fences, signs, flags, torches, and lights as may be necessary or as may be ordered by the Engineer to insure the safety of the public as well as those engaged in connection with the work. All regulatory signs, warning signs, guide signs, barricades, directional arrows, and route markers will conform to the provisions of Section 5 of the "Manual of Uniform Traffic Control Devices" (published by U.S.Government Printing Office). Traffic control devices must be set up prior to the start of construction or maintenance operations and shall be properly maintained during the time such special conditions exist. When no longer required, they shall be removed. Where operations are performed in stages, only those devices which pertain to the stage in progress shall be visible. When traffic control devices do not apply, they shall be covered or out of the view of traffic. All traffic control devices shall be kept in proper position, clean, and legible at all times. All barricades and sign supports shall be neatly constructed and shall not appear makeshift or hastily thrown together. They shall be repaired, cleaned or repainted as needed to keep up their appearance. Oil burning torches shall not be placed so close to signs or barricades as to scorch them or deposit soot on them. Special care shall be taken to see that weeds, shrubbery, construction material or equipment, and spoil are not allowed to obscure any sign, light or barricade. All barricades and signs will be illuminated one-half hour before sunet to one-half hour after sunrise.

It shall be the Contractor's responsibility to maintain all barricades, flags, torches or lights throughout the night hours, weekends, holidays, or other periods of inactivity and to check these warning devices at least once every eight (8) hours to assure that they are in the proper position and are operating properly. The Contractor shall also inform the Engineer, in writing, of the name(s) and phone number(s) of the person(s) who is (are) personally responsible for the maintenance of the warning

devices. In the event of an emergency when this (these) person(s) cannot be reached, the Owner reserves the right to take the necessary precautions to protect the public and traffic. If it becomes necessary to exercise this right by having the Owner's forces, or others, erect the necessary barricades, torches, or lights, the Contractor shall be charged a minimum of $50 for each such trip to the job site. Such charge will be deducted from any payment due the Contractor. Charges in excess of $50 shall be determined by the amount of equipment and men necessary for the work to be done.

Special pedestrian detours are often necessary in areas adjacent to new construction or demolition of existing structures. The Engineer shall determine when walkways are required. Plans for walkways must be approved by the Engineer.

Since it is not practical or possible to prescribe detailed Standards of Application for the many diverse maintenance and construction activities that might conceivably arise, modifications of the traffic control requirements and sign size may be required to fit special circumstances.

G6-09 WORK ON RIGHT-OF-WAY

Prior to the start of construction, the Owner shall obtain all lands and rights-of-way necessary for the carrying out and completion of work to be performed under this contract.

Work on railroad, State highway, or any public right-of-way shall be performed in conformance with the requirements of the Agency having jurisdiction over the right-of-way. It will be the Contractor's responsibility to notify the Engineer and said Agency before beginning work on the right-of-way and to ascertain that the schedule and manner of proposed operations is approved.

Property lines, limits of easements and limits of construction permits are indicated on the plans, and it shall be the Contractor's responsibility to confine his construction within these limits. Any damage resulting to persons or property by encroachment beyond these limits shall be the sole responsibility of the Contractor. Should the Contractor desire to go outside the right-of-way or easements to operate his equipment, stockpile material, or intrude on private property with any phase of construction, he shall provide the Engineer with written permission from the property owner. The written permission shall specifically state that the property owner will not look to the Owner for compensation for use of or damage to his property.

G6-10 PRESERVATION AND RESTORATION OF PROPERTY, TREES, MONUMENTS, ETC.

The Contractor shall be responsible for the preservation of all public and private property, trees, shrubs, monuments, and other property along and adjacent to the work and shall use every precaution to prevent injury and damage thereto. He shall use suitable precaution necessary to prevent damage to existing utility facilities both above and below ground.

The Contractor shall carefully protect from disturbance or damage all land monuments or property markers. If deemed necessary by the Engineer, monuments and markers may be removed, but only under the direction of the Engineer, and after proper witness and reference points have been set.

The Contractor shall not injure, destroy, or damage any property without obtaining proper authorization. When or where any direct or indirect damage is done to public or private property by or on account of any act, omission, neglect or misconduct in the execution of the work, or in consequence of the nonexecution thereof on the part of the Contractor, such property shall be restored by the Contractor at his own expense to a condition similar or equal to that existing before such injury was done, by repairing, rebuilding, or otherwise restoring the same, or he shall make good such damage or injury in a manner acceptable to the Engineer.

Protection and Replacement: Care shall be taken to protect uncovered tree roots by keeping them covered with moist sacks while exposed to the air. Grass, sod, shrubs, and plants on public and private property shall, before excavation, be carefully removed and replaced on completion of backfill. Care shall be taken by the Contractor in felling trees authorized for removal to avoid unnecessary damage to vegetation that is to remain in place. Any limbs or branches or trees broken during such operations shall be trimmed with a clean cut, and painted with an approved tree-pruning compound, if required by the Engineer. The Contractor will be liable for and may be required to replace or restore, at his own expense, all vegetation not protected and preserved as required herein that may be destroyed or damaged.

G6-11 CLEANUP

From time to time or as may be directed by the Engineer and immediately after completion of the work, the Contractor shall at his own expense clean up and remove all refuse and unused materials of any kind resulting from the work. At any time during the progress of the work if in the opinion of the Engineer the cleanup is not keeping pace with the excavation or installation work, the Contractor shall at the direction of the Engineer suspend

(G6-11 CLEANUP, cont.)

all excavation or installation work until the premises are cleaned up to the satisfaction of the Engineer. Any additional expenses involved will be the sole responsibility of the Contractor, and the Owner will not be held liable for any additional expense involved.

Upon completion of the work, the Contractor shall remove all his equipment and put the area of the work in a neat and clean condition and do all other cleaning required to complete the work in a workmanlike manner, ready for use and satisfactory to the Engineer. Upon failure to complete the cleanup to the satisfaction of the Engineer within the time specified in a written notice to the Contractor, the cleanup may be done by the Owner and the cost thereof be charged to the Contractor and deducted from his final pay estimate.

All cleanup work shall be considered incidental to the construction of the work.

G6-12 WATER - FIRE HYDRANTS

(a) The Contractor desiring to use water from fire hydrants for the purpose of compacting, rolling or the like, as may be required towards fulfilling the requirements of the specification, shall obtain a hydrant-use permit and keep the permit on the project site.

(b) The Contractor shall abide by the following limitations in the use of hydrants:

(1) Use only an approved hydrant wrench.

(2) Keep the hydrant accessible at all times.

(3) Detach hose and replace bungs, except when hydrant is in actual use for drawing water.

(4) Notify the Water Utility and Engineer immediately of any mechanical failure.

(5) Notify the Water Utility and Engineer of any large volume of water required in advance.

(6) During the period of October 1, to May 15, the usage of fire hydrants shall be limited and use scheduled in such a manner that Water Utility personnel can service the hydrants during normal working hours.

(G6-12 WATER-FIRE HYDRANTS, cont.)

(7) During the summer months when a long dry spell is encountered, the usage of hydrants may be restricted by the Water Utility Manager to off-peak hours.

(8) During emergencies the use of hydrants will be restricted.

(c) Work which interferes with the accessibility of any fire hydrant must be coordinated with the Fire Chief. Access will be maintained to every hydrant wherever possible; however, in the event access cannot be maintained, the Contractor shall notify the Fire Chief and Engineer in advance and a schedule be submitted showing the status of accessibility within exact periods of time.

G6-13 EQUIPMENT

The Contractor shall furnish to the Engineer, upon request, a list of all equipment, tools and machines necessary to perform the work under this contract, in his possession or available to him. Said equipment, tools and machines shall be subject to inspection and approval by the Engineer, shall comply with applicable safety regulations and shall be maintained in a satisfactory and safe working condition at all times. No equipment shall be removed from the jobsite by the Contractor or his subcontractors nor substituted for other equipment without approval by the Engineer prior to completion of the work.

G6-14 USE OF EXPLOSIVES

Blasting will not be permitted in any case without the specific authority of the Owner and then only under such specific restrictions as may be required by the proper authorities. Explosives shall be handled and used in strict compliance with the General Safety Code of the State of Alaska.

When the use of explosives is necessary for the prosecution of the work, the Contractor shall use the utmost care not to endanger life or property, cause slides, or disturb materials outside the neat lines or the cross-section. Breaking up of boulders or rock masses shall be done by employing the method of "plastering" and "mudcapping." Blasting shall be completed in the vicinity of new work before construction on such new work is undertaken. All explosives shall be stored in a secure manner and placed in compliance with local laws and ordinances, and such storage places shall be clearly marked "DANGEROUS-EXPLOSIVES." Any damage to completed work and/or property caused by blasting shall be repaired at the Contractor's expense.

G6-15 DISPOSAL AREA

Unless and except as may otherwise be stated in the specifications, the Contractor shall make his own arrangements for and shall assume all costs in connection with disposal sites or areas. Any and all disposal sites or areas shall be in such locations and so maintained that they shall be neither offensive nor become a menace to public health and welfare. All disposal sites are to be approved by the Engineer.

G6-16 SANITARY FACILITIES

The Contractor shall furnish, install and maintain ample sanitation facilities for the workmen. Temporary toilets shall be placed at the time the work is started, as directed by the Engineer and shall be maintained in conformance with local health ordinances.

G6-17 PREFERENCE TO LOCAL LABOR

Preference in the employment of laborers and mechanics at the site shall be given, when they are qualified by training and experience for work on the project, first to bona fide local residents who have served in the Armed Forces of the United States; second, to other bona fide local residents; and third, resident citizens of the United States.

G6-18 ANTI-DISCRIMINATION

During the performance of this contract the Contractor agrees as follows:

(1) The Contractor will not discriminate against any employee or applicant for employment because of race, creed, color, or national origin. The Contractor will take affirmative action to ensure that applicants are employed, and that employees are treated during employment without regard to their race, creed, color, or national origin. Such action shall include, but not be limited to, the following: employment, upgrading, demotion, or transfer; recruitment or recruitment advertising; layoff or termination; rates of pay or other forms of compensation; and selection for training, including apprenticeship. The Contractor agrees to post in conspicuous places, available to employees and applicants for employment, notices to be provided setting forth the provisions of this nondiscrimination clause.

(G6-18 ANTI-DISCRIMINATION, cont.)

(2) The Contractor will, in all solicitations or advertisements for employees placed by or on behalf of the Contractor, state that all qualified applicants will receive consideration for employment without regard to race, creed, color, or national origin.

(3) The Contractor will send to each labor union or representative of workers with which he has a collective bargaining agreement or other contract or understanding, a notice to be provided advising the labor union or workers' representative of the Contractor's commitments under Section 202 of Presidential Executive Order No. 11246 of September 24, 1965, and shall post copies of the notice in conspicuous places available to employees and applicants for employment.

(4) The Contractor will comply with all provisions of Presidential Order No. 11246 of September 24, 1965, and of the rules, regulations, and relevant orders of the U. S. Secretary of Labor.

(5) When required by the Engineer, the Contractor will furnish all information and reports required by Presidential Executive Order No. 11246 of September 24, 1965, and by the rules, regulations, and orders of the U.S.Secretary of Labor, or pursuant thereto, and will permit access to his books, records, and accounts by the Owner or any one the Owner shall designate for purposes of investigation to ascertain compliance with such rules, regulations, and orders.

(6) In the event of the Contractor's noncompliance with the nondiscrimination clauses of this contract or with any of such rules, regulations, or orders, this contract may be cancelled, terminated, or suspended in whole or in part and the Contractor may be declared ineligible for further contracts.

(7) The Contractor will include the provisions of Paragraphs (1) through (6) in every subcontract or purchase order so that such provisions will be binding upon each subcontractor or vendor. The Contractor will take such action with respect to any subcontract or purchase order as the Owner may direct as a means of enforcing such provisions, including sanctions of noncompliance.

G6-19 MINIMUM WAGES

Minimum wages shall be paid in accordance with Chapter 52, Session Laws of Alaska, as approved March 23, 1959, and any revisions thereto. Section 36.05.070 and 36.05.080 of the Alaska Statutes are hereby incorporated into these specifications.

G6-20 MINIMUM WAGES (FEDERAL)

(a) The Contractor shall post at appropriate conspicuous points at the site of the project a schedule showing all determined minimum wage rates for the various classes of laborers and mechanics to be engaged in work on the project under this contract and all deductions, if any, required by law to be made from unpaid wages actually earned by the laborers and mechanics so engaged.

(b) All mechanics and laborers employed or working upon the site of the work will be paid unconditionally and not less often than once a week, and without subsequent deduction or rebate on any account (except such payroll deductions as are permitted by regulations issued by the Secretary of Labor under the Copeland Act (29 CFR Part 3)), the full amounts due at time of payment computed at wage rates not less than those contained in the wage determination decision of the Secretary of Labor which is attached hereto and made a part hereof, regardless of any contractual relationship which may be alleged to exist between the Contractor and such laborers and mechanics. For the purpose of this clause, contributions made or costs reasonably anticipated under Section 1(b)(2) of the Davis-Bacon Act on behalf of laborers or mechanics are considered wages paid to such laborers or mechanics, subject to the provisions of 29 CFR 5.5(a)(1)(iv). Also for the purpose of this clause, regular contributions made or costs incurred for more than a weekly period under plans, funds, or programs, but covering the particular weekly period, are deemed to be constructively made or incurred during such weekly period.

(c) Any class of laborers or mechanics which is not listed in the wage determination and which is to be employed under the contract, shall be classified or reclassified conformably to the wage determination, and a report of the action taken shall be sent to the Secretary of Labor. In the event the interested parties cannot agree on the proper classification or reclassification of a particular class of laborers and mechanics to be used, the question shall be referred to the Secretary for final determination.

(d) Whenever the minimum wage rate prescribed in the contract for a class of laborers or mechanics includes a fringe benefit which is not expressed as an hourly wage rate and the Contractor is obligated to pay a cash equivalent of such a fringe benefit, an hourly cash equivalent thereof shall be established. In the event the interested parties cannot agree upon a cash equivalent of the fringe benefit, the question shall be referred to the Secretary of Labor for determination.

(G6-20 MINIMUM WAGES(FEDERAL), cont.)

(e) The Contractor may consider as part of the wages of any laborer or mechanic the amount of any costs reasonably anticipated in providing benefits under a plan or program described in section 1(b)(2)(B) of the Davis-Bacon Act, or any bona fide fringe benefits not expressly listed in Section 1(b)(2) of the Davis-Bacon Act or otherwise not listed in the wage determination decision of the Secretary of Labor which is included in this contract, only when the Secretary of Labor has found, upon the written request of the Contractor, that the applicable standards of the Davis-Bacon Act have been met. Whenever practicable, the Contractor should request the Secretary of Labor to make such findings before the making of the contract. In the case of unfunded plans and programs, the Secretary of Labor may require the Contractor to set aside in a separate account assets for the meeting of obligations under the plan or program.

(f) The specified wage rates are minimum rates only, and the Owner will not consider any claims for additional compensation made by the Contractor because of payment by the Contractor of any wage rate in excess of the applicable rate contained in this contract. All disputes in regard to the payment of wages in excess of those specified in this contract shall be adjusted by the Contractor.

(g) If the Contractor does not make payments to a trustee or other third person, he may consider as part of the wages of any laborer or mechanic the amount of any costs reasonably anticipated in providing benefits under a plan or program of a type expressly listed in the wage determination decision of the Secretary of Labor which is a part of this contract: Provided however, the Secretary of Labor has found upon the written request of the Contractor that the applicable standards of the Davis-Bacon Act have been met. The Secretary of Labor may require the Contractor to set aside in a separate account assets for the meeting of obligations under the plan or program.

G6-21 WITHHOLDING OF PAYMENTS

In the event of failure to pay any laborer or mechanic employed or working on the site of the work, all or part of the wages required by the contract, the Owner may withhold from the Contractor so much of the accrued payments or advances as may be considered necessary to pay laborers and mechanics employed by the Contractor or any subcontractor on the work the full amount of wages required by the contract.

G6-22 PAYROLLS AND BASIC RECORDS

(a) Payrolls and basic records relating thereto will be maintained during the course of the work and preserved for a period of three years thereafter for all laborers and mechanics working at the site of the work. Such records will contain the name and address of each such employee, his correct classification, rates of pay (including rates of contributions or costs anticipated of the types described in section 1(b)(2) of the Davis-Bacon Act), daily and weekly number of hours worked, deductions made and actual wages paid. Whenever the Secretary of Labor has found under 29 CFR 5.5(a)(1)(iv) that the wages of any laborer or mechanic include the amount of any costs reasonably anticipated in providing benefits under a plan or program described in section 1(b)(2)(B) of the Davis-Bacon Act, the Contractor shall maintain records which show that the commitment to provide such benefits is enforceable, that the plan or program is financially responsible, and that the plan or program has been communicated in writing to the laborers or mechanics so affected, and records which show the costs anticipated or the actual cost incurred in providing such benefits.

(b) The Contractor will submit weekly a copy of all payrolls to the Owner. The copy shall be accompanied by a statement signed by the employer or his agent indicating that the payrolls are correct and complete, that the wage rates contained therein are not less than those determined by the Secretary of Labor and that the classifications set forth for each laborer or mechanic conform with the work he performed. A submission of a "Weekly Statement of Compliance" which is required under this contract and the Copeland regulations of the Secretary of Labor (29 CFR, Part 3) and the filing with the initial payroll or any subsequent payroll of a copy of any findings by the Secretary of Labor under 29 CFR 5.5(a)(1)(iv) shall satisfy this requirement. The Prime Contractor shall be responsible for the submission of copies of payrolls of all subcontractors. The Contractor shall make the records required under the labor standards clauses of the contract available for inspection by authorized representatives of the Owner and the Department of Labor, and shall permit such representatives to interview employees during working hours on the job.

G6-23 APPRENTICES

Apprentices shall be permitted to work as such only when they are registered, individually, under a bona fide apprenticeship program registered with a State apprenticeship agency which is recognized by the Bureau of Apprenticeship and Training, United States Depart-

(G6-23 APPRENTICES, cont.)

ment of Labor; or if no such recognized agency exists in a State, under a program registered with the Bureau of Apprenticeship and Training, United States Department of Labor. The allowable ratio of apprentices to journeymen in any craft classification shall not be greater than the ratio permitted to the Contractor as to his entire work force under the registered program. Any employee listed on a payroll at an apprentice wage rate, who is not registered as above, shall be paid the wage rate determined by the Secretary of Labor for the classification of work he actually performed. The Contractor or subcontractor will be required to furnish written evidence of the registration of his program and apprentices as well as of the appropriate ratios and wage rates, for the area of construction, prior to using any apprentices on the contract work.

G6-24 COMPLIANCE WITH COPELAND ANTI-KICKBACK ACT & REGULATIONS

The Contractor shall comply with the Copeland Anti-Kickback Act and Regulations of the Secretary of Labor (29 CFR, Part 3) which are herein incorporated by reference.

G6-25 OVERTIME

(a) No Contractor or subcontractor contracting for any part of the contract work which may require or involve the employment of laborers or mechanics, including watchmen and guards, shall require or permit any laborer or mechanic in any workweek in which he is employed on such work to work in excess of eight hours in any calendar day or in excess of forty hours in such workweek unless such laborer or mechanic receives compensation at a rate not less than one and one-half times his basic rate of pay for all hours worked in excess of eight hours in any calendar day or in excess of forty hours in such workweek, as the case may be.

(b) Violation; liability for unpaid wages; liquidated damages. In the event of any violation of the clause set forth in subparagraph (1), the Contractor and any subcontractor responsible therefor shall be liable to any affected employee for his unpaid wages. In addition, such Contractor and subcontractor shall be liable to the United States (in the case of work done under contract for the District of Columbia or a territory, to such District or to such territory), for liquidated damages. Such liquidated damages shall be computed with respect to each individual laborer or mechanic employed in violation of the clause set forth in subparagraph(1), in the sum of $10 for each calendar day on which such employee was required or permitted to work in excess of eight hours or in excess of the standard workweek of forty hours without payment of the overtime wages required by the clause set forth in subparagraph(1).

(G6-25 OVERTIME, cont.)

(c) Withholding for unpaid wages and liquidated damages. The Owner may withhold from any moneys payable on account of work performed by the Contractor or subcontractor, such sums as may administratively be determined to be necessary to satisfy any liabilities of such Contractor or subcontractor for unpaid wages and liquidated damages as provided in the clause set forth in subparagraph (2).

(d) Subcontracts. The Contractor shall insert in any subcontracts and clauses set forth in subparagraphs (a), (b), and (c) of this paragraph and also a clause requiring the subcontractors to include these clauses in any lower tier subcontracts which they may enter into, together with a clause requiring this insertion in any further subcontracts that may in turn be made.

G6-26 INTEREST OF MEMBER OF OR DELEGATE TO CONGRESS

No member of or Delegate to Congress, or Resident Commissioner, shall be admitted to any share or part of this contract or to any benefit that may arise therefrom, but this provision shall not be construed to extend to this contract if made with a corporation for its general benefit.

G6-27 OTHER PROHIBITED INTERESTS

No officer of the Owner who is authorized in such capacity and on behalf of the Owner to negotiate, make, accept or approve, or to take part in negotiating, making, accepting, or approving any architectural, engineering, inspection, construction or material supply contract or any subcontract in connection with the construction of the project, shall become directly or indirectly interested personally in this contract or in any part hereof. No officer, employee, architect, attorney, engineer or inspector of or for the Owner who is authorized in such capacity and on behalf of the Owner to exercise any legislative, executive, supervisory or other similar functions in connection with the construction of the project, shall become directly or indirectly interested personally in this contract or in any part thereof, any material supply contract, subcontract, insurance contract, or any other contract pertaining to the project.

G6-28 PROVISIONS REQUIRED BY LAW DEEMED INSERTED

Each and every provision of law and clause required by law to be inserted in this contract shall be deemed to be inserted herein and the contract shall be read and enforced as though it were included herein, and if through mistake or otherwise any such provision is not inserted, or is not correctly inserted, then upon the application of either party the contract shall forthwith be physically amended to make such insertion or correction.

G6-29 INDUSTRIAL SAFETY - OSHA ALASKA PLAN

Chapter 46 of the Session Laws of Alaska passed in 1973 implements the Alaska Plan of the Occupational Safety and Health Act. Under this act certain regulations have been promulgated by the Department of Labor. Others will be promulgated in the future. The Owner is subject to these OSHA requirements as well as the Contractor performing under its contracts. The Contractor is expressly notified of the pendency of the OSHA requirements and shall act in accordance therewith. Failure to comply with OSHA requirements, notwithstanding any other provision of this contract, is sufficient cause for termination and default under the contract provisions.

G6-30 CONVENIENCE OF THE PUBLIC AND THE OWNER

All work under this Contract will be conducted in a manner which will not inconvenience the public in the use of the facilities or the using agency in the conduct of normal business. Work will be closely coordinated between the Owner and the Contractor to assure that usage will not be denied to the public or the using agency as a result of this work. If it becomes necessary to interrupt the normal schedule of activities in any way, such interruption will be scheduled well in advance and will have the express approval of the Engineer.

G6-31 REPORTS, RECORDS, AND DATA

The Contractor shall submit to the Owner such schedule of quantities and costs, progress schedules, payrolls, reports, estimates, records and other data as the Owner may request concerning work performed or to be performed under this contract.

SECTION G7 - PROSECUTION AND PROGRESS

G7-01 NOTICE TO PROCEED

The Contractor shall receive written notification from the Owner to proceed with the work after the contract has been executed completely. The Contractor shall begin work within ten (10) days after the effective date of the notice to proceed, or at such time thereafter as the Engineer may direct.

G7-02 PROGRESS SCHEDULE AND REQUIREMENTS FOR OVERTIME WORK

(a) Schedule: The Contractor shall within five (5) days, or within such time as determined by the Engineer, before commencement of the work, prepare and submit to the Engineer for approval a practicable schedule showing the order in which he will start the several salient features, including procurement of materials, plant and equipment, and the contemplated dates for completing same. This schedule shall be in the form of a progress chart of suitable scale to indicate appropriately the percentage of work scheduled for completion at any time. The Contractor when required shall enter on the chart the actual progress at the end of each month or at such intervals as directed by the Engineer and shall immediately deliver three copies thereto to the Engineer.

(b) Forces: The Contractor shall furnish sufficient forces, construction plant and equipment and shall work such hours, including night shifts and overtime operations, as may be necessary to insure the completion of the work within the specified time. If, in the opinion of the Engineer, the Contractor falls behind the progress schedule, the Contractor shall take such steps as may be necessary to improve his progress and the Engineer may require him to increase the number of shifts, or overtime operations, days of work, or the amount of construction plant, all without additional cost to the Owner.

(c) Failure to Comply: Failure of the Contractor to comply with the requirements of the Engineer under these provisions shall be grounds for determination by the Engineer that the Contractor is not prosecuting the work with such diligence as will insure completion within the time specified. Upon such determination the Engineer may terminate the Contractor's right to proceed with the work, or any separable part thereof.

G7-03 SUSPENSION OF WORK

When, in the judgment of the Engineer, unfavorable weather makes it impractical to secure desired results, or other conditions warrant the granting of a suspense order, he shall issue to the

Contractor a written order to suspend work wholly or on any part of the contract. When conditions are again favorable for prosecution of the work the Engineer shall issue to the Contractor a written order to resume the suspended work. Orders to suspend work will not be written for intermittent shutdowns due to weather conditions unless the suspension of work is to be for an extended period of time. The Contractor shall take every precaution to prevent any damage or unreasonable deterioration of the work during the time it is closed down. Suspension of the work by the Engineer shall not furnish any grounds for claims by the Contractor for damages or extra compensation, but the period of such suspension shall be taken into consideration in determining the revised date for completion as hereinafter provided. The Contractor shall not suspend work under the contract without the written order of the Engineer as stated in the preceding paragraph. The question as to the necessity of discontinuing any portion of the work by reason of unfavorable weather conditions shall be determined by the Engineer.

Upon failure of the Contractor to carry out the orders of the Engineer or to perform work under the contract in accordance with its provisions, the Engineer may suspend the work for such period as he may deem necessary. Time lost by reason of such failure or in replacing improper work or material shall not furnish any grounds to the Contractor for claiming an extension of time or extra compensation, and shall not release the Contractor from damages or liability from failure to complete the work within the time prescribed.

G7-04 SUSPENSION OF WORK FOR AN EXTENDED PERIOD

In the event that a suspension of work is ordered in writing by the Engineer for an extended period of time due to unsuitable weather, which work in the opinion of the Engineer could have been performed prior to the occurrence of unsuitable weather conditions had the Contractor diligently prosecuted the work when conditions were suitable, the Contractor, at his own expense, shall do all work necessary to provide a safe, smooth and unobstructed roadway through the construction area for use by public traffic, and particularly for access to abutting property, during the period of suspension. If the Contractor fails to do the work as above specified, the Owner will perform such work and deduct the cost thereof from any monies due or to become due the Contractor.

In the event that a suspension of work for an extended period of time is ordered in writing by the Engineer due to unsuitable weather or unforeseen conditions and, in the opinion of the Engineer, the Contractor has prosecuted the work with energy and diligence prior to the time of suspension of operations and has

so constructed the temporary roadway or detour that it may be maintained by routine maintenance forces of the Owner during the period of suspension, the cost of maintaining a smooth and unobstructed roadway will be borne by the Owner at no cost to the Contractor.

In the event that a suspension of work for an extended period of time is ordered in writing by the Engineer on oiling or resurfacing projects which do not require disturbing the existing traveled surface and on which the existing surface or shoulders have not been disturbed by the Contractor, the Owner will maintain the roadway at no cost to the Contractor during the period of suspension.

If a suspension of work for an extended period, under which the Owner assumes the responsibility of maintenance, is granted in writing by the Engineer, the Owner will assume no responsibility except for routine maintenance which shall include and be restricted to the following:

(a) Maintenance of the traveled roadway and/or detour surface

(b) Maintenance of roadway surface drainage along the roadway and/or detour

Any areas which are closed to traffic shall be maintained and safeguarded by the Contractor at his own expense.

In the event that the Owner has assumed maintenance of a project during a period of suspension, the Contractor agrees to accept the roadway or detour as it has been maintained by the Owner and no claim for extra payment shall be made on account of its condition or in the manner in which the maintenance has been performed by the Owner. Such suspensions of work shall not relieve the Contractor of his responsibility of restoring the roadway and its slopes to the designated roadway section at his unit contract prices and for performing all other remaining work in accordance with the contract.

An extended period of time as expressed in these specifications is intended to mean shutdowns ordered in writing by the Engineer to cover extended shutdowns due to winter or seasonal weather, or extended shutdows due to delays occasioned by the failure of another contractor to complete a portion of the work on which progress of the contract is dependent, or for other causes approved by the Engineer.

G7-05 TIME FOR COMPLETION AND LIQUIDATED DAMAGES

It is hereby understood and mutually agreed, by and between the Contractor and the Owner, that the date of beginning and the time for completion as specified in the contract of the work to be done hereunder are ESSENTIAL CONDITIONS of this contract; and it is further mutually understood and agreed that the work embraced in this contract shall be commenced on a date to be specified in the "Notice to Proceed."

The Congractor agrees that said work shall be prosecuted regularly, diligently, and uninterruptedly at such rate of progress as will insure full completion thereof within the time specified. It is expressly understood and agreed,by and between the Contractor and the Owner, that the time for the completion of the work described herein is a reasonable time for the completion of the same, taking into consideration the average climatic range and usual industrial conditions prevailing in this locality.

If the said Contractor shall neglect, fail or refuse to complete the work within the time herein specified, or any proper extension thereof granted by the Owner, then the Contractor does hereby agree, as a part consideration for the awarding of this contract, to pay to the Owner the amount specified in the contract, not as a penalty but as liquidated damages for such breach of contract as hereinafter set forth, for each and every calendar day that the Contractor shall be in default after the time stipulated in the contract for completing the work.

The said amount is fixed and agreed upon by and between the Contractor and the Owner because of the impracticability and extreme difficulty of fixing and ascertaining the actual damages the Owner would in such event sustain, and said amount is agreed to be the amount of damages which the Owner would sustain and said amount shall be retained from time to time by the Owner from current periodical estimates.

It is further agreed that time is of the essence of each and every portion of this contract and of the specifications wherein a definite and certain length of time is fixed for the performance of any act whatsoever; and where under the contract an additional time is allowed for the completion of any work, the new time limit fixed by such extension shall be of the essence of this contract. Provided, that the Contractor shall not be charged with liquidated damages or any excess cost when the Owner determines that the Contractor is without fault and the Contractor's reasons for the time extension are acceptable to the Owner; Provided, further, that the Contractor shall not be charged with liquidated damages or any excess cost when the delay in completion of the work is due:

(G7-05 TIME FOR COMPLETION AND LIQUIDATED DAMAGES, cont.)

(a) To any preference, priority or allocation order duly issued by the Government;

(b) To unforeseeable cause beyond the control and without the fault or negligence of the Contractor, including, but not restricted to, acts of God, or of the public enemy, acts of the Owner, acts of another Contractor in the performance of a contract with the Owner, fires, floods, epidemics, quarantine restrictions, strikes, freight embargoes, and severe weather; and

(c) To any delays of Subcontractors or supplies occasioned by any of the causes specified in subsections (a) and (b) of this article:

Provided, further, that the Contractor shall, within ten (10) days from the beginning of such delay, unless the Owner shall grant a further peiod of time prior to the date of final settlement of the contract, notify the Owner, in writing, of the causes of the delay, who shall ascertain the facts and extent of the delay and notify the Contractor within a reasonable time of its decision in the matter.

G7-06 FINAL ACCEPTANCE

Acceptance of construction shall be defined as final acceptance of the project only in that it has been constructed, cleaned up, and completed in accordance with the plans and specifications.

It is mutually agreed between parties to the contract that approval of the final estimate by signature of the Engineer or other officer of the Owner shall constitute acceptance, on the date of such approval, of the work and material included in such final estimate. It is provided further that such approval shall not constitute an acceptance of any unauthorized work; that no payment made under the contract except the final payment shall be evidence of the performance of the contract, either wholly or in part; and that no payment shall constitute an acceptance of unauthorized or defective work or improper material.

Projects may be accepted in respect to construction at such time as they are entirely completed; however, on projects consisting of several disconnected streets, sewer lines, or water lines, the Engineer may accept any of these separate sections if he so elects. Continuous sewer or water projects will not be accepted until completed in their entirety.

G7-07 RIGHT OF THE OWNER TO TERMINATE CONTRACT

In the event that any of the provisions of this contract are violated by the Contractor, or by any of his subcontractors, the Owner may serve written notice upon the Contractor and the Surety of its intention to terminate the contract, such notices to contain the reasons for such intention to terminate the contract, and unless within ten (10) days after the serving of such notice upon the Contractor, such violation or delay shall cease and satisfactory arrangement of correction be made, the contract shall, upon the expiration of said ten (10) days, cease and terminate. In the event of any such termination, the Owner shall immediately serve notice thereof upon the Surety and the Contractor and the Surety shall have the right to take over and perform the contract; Provided, however, that if the Surety does not commence performance thereof within ten (10) days from the date of the mailing to such Surety of notice of termination, the Owner may take over the work and prosecute the same to completion by contract or by force account for the account and at the expense of the Contractor and the Contractor and his Surety shall be liable to the Owner for any excess cost occasioned the Owner thereby, and in such event the Owner may take possession of and utilize in completing the work, such materials, appliances, and plant as may be on the site of the work and necessary therefor.

SECTION G8 - MEASUREMENT AND PAYMENT

G8-01 MEASUREMENT

The measurement of quantities of work performed, which are used in the calculation of payment to the Contractor, shall be in accordance with the instruction of the Engineer and subject to verification by the Owner.

G8-02 SCOPE OF PAYMENT

The Contractor shall accept the compensation, as herein provided, in full payment for furnishing all materials, labor, tools, and equipment necessary to the completed work and for performing all work contemplated and embraced under the contract; also for loss or damage arising from the nature of the work, or from the action of the elements, or from any unforeseen difficulties which may be encountered during the prosecution of the work until the final acceptance by the Owner, and for all risks of every description connected with the prosecution of the work; also for all expenses incurred in consequence of the suspension or discontinuance of the work as herein specified; and for completing the work according to the plans and specifications.

Neither the payment of any estimate nor of any retained percentage shall relieve the Contractor from any obligation to make good any defective work or material. Payment will be made only for materials actually incorporated in the work.

G8-03 PAYMENT FOR EXTRA WORK

Adjustments, if any, in the amounts to be paid the Contractor by reason of any change, addition, or deduction shall be determined by one or more of the following methods as determined by the Owner.

(1) By an acceptable lump sum proposal from the Contractor.
(2) By unit prices contained in the Bid Proposal.
(3) By unit prices mutually agreed upon by the Contractor and the Owner.
(4) By unit prices as required in the Special Provisions.
(5) By a cost-plus method consisting of the following:

(a) Labor including foreman supervision at the current local rate of wages agreed upon prior to the start of work. Health and welfare benefits, travel time, and other fringe benefits will be considered wages.

(b) Materials entering permanently into the work.

(c) Rental of power tools or equipment which are necessary for the proper prosecution of the work. The rates shall be determined in advance and shall include and be full compensation for furnishing all fuel, lubrication, repairs, maintenance, insurance, and incidental expenses except labor for operation thereof. If the necessary equipment is not on the site of the project and it is not anticipated that it would be required for the performance of work under the terms of the contract, the Contractor shall be paid an agreed-upon amount for the necessary transportation of the equipment in-and-out.

(d) To the foregoing (a-b-c), there shall be added a fixed fee agreed upon but not to exceed fifteen (15) percent of the actual cost. The fee shall be compensation to cover the cost of supervision, overhead, bond, profit, and any other general expenses.

(e) The Contractor shall submit to the Engineer three (3) copies of an itemized breakdown of labor, material, and equipment within two weeks after the completion of the extra work.

It shall be the responsibility of the Contractor before proceeding with any change to satisfy himself that the change has been properly authorized in behalf of the Owner. No charge for extra work or any other change in the contract will be allowed unless the extra work or change has been authorized in writing by the Owner, and the compensation or method thereof is stated in such written authority.

G8-04 PROGRESS PAYMENTS

The Contractor shall be entitled to monthly progress payments for work done during the preceding calendar month. Requests for progress payments will be prepared by the Contractor and submitted to the Engineer on or before the fifth (5th) calendar day of each month. Such reports shall be submitted in triplicate, unless otherwise specified, on a form provided by the Engineer. The progress payments shall be based upon the quantities of work completed.

Quantities used for progress payments shall be considered only as approximate and provisional and shall be subject to recalculation, adjustment, and correction in subsequent progress payments or the final payment. Inclusion of any quantities in progress payments or failure to disapprove the work at the time of progress payment shall not be construed as acceptance of the corresponding work or materials.

cost of materials properly stored, protected, and insured at the site of the work may be paid on progress payments. In preparing the progress payments, advancement will be made therein for ninety (90) percent of the cost of such materials as evidenced by paid invoices. Advancements will not be made for any item of material amounting to less than one thousand dollars ($1,000). Advancement for materials will not constitute acceptance and any faulty material will be condemned although advancement may have been made. Deductions at the same rates and equal in amount to the advancements will be made on the payment as the material is used.

The Owner may withhold or nullify the whole or part of any payment due the Contractor to such an extent as may be necessary to protect itself from loss on account of:

1) Defective work not remedied.
2) Claims as herein provided.
3) A reasonable doubt that the Contract can be completed for the balance then unpaid.
4) Damage to another Contractor.
5) Any breach of the provisions, requirements, and conditions of the Contract Documents.

The Owner may, at his option and at any time, retain out of any amount due the Contractor sums sufficient to cover any unpaid claim, provided that sworn statements of said claim have been filed with the Owner and the Engineer.

G8-05 PAYMENTS BY CONTRACTOR

The Contractor shall pay (a) for all transportation and utility services not later than the 20th day of the calendar month following that in which services are rendered, (b) for all materials, tools, and other expendable equipment to the extent of ninety percent (90%) of the cost thereof, not later than the 20th day of the calendar month following that in which such materials, tools, and equipment are delivered at the site of the project, and the balance of the cost thereof, not later than the 30th day following the completion of that part of the work in or on which such materials, tools, and equipment are incorporated or used, and (c) to each of his subcontractors, not later than the 5th day following each payment to the Contractor, the respective amounts allowed the Contractor on account of the work performed by his subcontractors to the extent of each subcontractor's interest therein.

G8-06 OWNER'S RIGHT TO WITHHOLD CERTAIN AMOUNTS AND MAKE APPLICATION THEREOF:

The Contractor agrees that he will indemnify and save the Owner harmless from all claims growing out of the lawful demands of

subcontractors, laborers, workmen, mechanics, materialmen, and furnishers of machinery and parts thereof, equipment, power tools, and all supplies, including commissary, incurred in the furtherance of the performance of this contract. The Contractor shall, at the Owner's request, furnish satisfactory evidence that all obligations of the nature hereinabove designated have been paid, discharged, or waived. If the Contractor fails so to do, then the Owner may, after having served written notice, direct, or withhold from the Contractor's unpaid compensation a sum of money deemed reasonably sufficient to pay any and all such lawful claims until satisfactory evidence is furnished that all liabilities have been fully discharged whereupon payment to the Contractor shall be resumed, in accordance with the terms of this contract, but in no event shall the provisions of this sentence be construed to impose any obligations upon the Owner to either the Contractor or his Surety. In paying any unpaid bills of the Contractor, the Owner shall be deemed the agent of the Contractor, and any payment so made by the Owner shall be considered as a payment made under the contract by the Owner to the Contractor and the Owner shall not be liable to the Contractor for any such payments made in good faith.

G8-07 RETAINED PERCENTAGE

All payments on progress estimates shall not exceed ninety percent (90%) of the amount due the Contractor for the work itemized on his request for payment. Upon completion of seventy-five percent (75%) of the work, the Engineer, if he deems it expedient and providing the Contractor's performance is satisfactory in all respects, may approve progress payments up to ninety-five percent (95%) of the amount due the Contractor.

Upon completion of ninety-five percent (95%) of the work, the Engineer may approve progress payments up to ninety-eight percent (98%) of the amount due the Contractor providing there is sufficient retainage to cover the estimated cost of the remaining work or any claims.

G8-08 FINAL PAYMENT

After the work has been completed and accepted by the Engineer, the Contractor shall submit his request for final payment in triplicate on the forms supplied by the Engineer. The signature of the Contractor on the final payment shall constitute thorough acceptance by him of the total amount shown as entire payment of the amount due him under the contract; and by this act, the Contractor shall be stopped from filing any claim whatever under the Contract.

Payment of the final payment and retained percentage shall be withheld for a period of ninety (90) days following the final acceptance by the Owner, and shall be paid the Contractor at the expiration of said ninety (90) days in event no claims have been filed against such funds. In the event such claims are filed, the Contractor shall be paid such retained percentages less an amount sufficient to pay any such claims, together with a sum sufficient to pay the cost of such action and to cover attorney fees.

Neither the final payment nor any part of the retained percentage shall become due until the Contractor has furnished the Engineer a complete release of all liens arising out of this contract or receipts in full in lieu thereof and in either case an affidavit that so far as he has knowledge or information the releases and receipts include all the labor and material for which a lien could be filed. The Contractor may furnish a bond satisfactory to the Engineer to indemnify the Owner against such lien if any Subcontractor refuses to furnish a release or receipt in full. If any lien remains unsatisfied after all payments are made, the Contractor shall refund to the City all monies and costs that the Owner may be compelled to pay in discharging such a lien including a reasonable attorney's fee.

Neither the final payment nor any part of the retained percentage shall become due until the Engineer has obtained a specific release as to satisfactory condition of the rights-of-way affected by the Project, from the agency or agencies having jurisdiction over them.

In City rights-of-way, the release shall be signed by the Engineer, and shall be applicable to conformance to location, backfill, compaction, general condition of right-of-way, and replacement of improvements within the jurisdiction of the Engineer.

G8-09 CLAIMS FOR DAMAGE

(a) Owner: If the Contractor shall claim compensation from the Owner for any damage sustained by reason of any acts of the Owner or its agents, he shall, within five (5) days after sustaining such damage, submit a written statement of the nature of the damage sustained, to the Engineer.

(b) Labor and Material: Before the final acceptance of the work and payment of the percentage retained by the Owner, the Contractor shall furnish evidence satisfactory to the Owner that all claims for labor and material employed or used in the construction of said work have been settled, and that there is no legal basis for any claim against the Owner for such labor or materials.

(c) Other Contractors: If, through acts of neglect on the part of the Contractor, any other Contractor or any subcontractor shall suffer loss or damage on the work, the Contractor agrees to settle with such other Contractor by agreement, or arbitration, if such other Contractor or subcontractor shall assert any claim against the Owner on account of any damage alleged to have been sustained, the Owner shall notify the Contractor, who shall indemnify and save harmless the Owner against any such claims.

(d) Extra Cost: If the Contractor claims that any instructions by drawings or otherwise involve extra cost or an extension of time, he shall notify the Engineer in writing within ten (10) days after the receipt of such instructions and in any event before proceeding to execute the work. Thereafter the procedure shall be the same as that described in Section G8-03 for changes in work. No such claim shall be valid unless made in accordance with the terms of this contract.

SPECIAL PROVISIONS INDEX

SP-01	Completion Dates for Work Items	S-1
SP-02	Road Closures and/or Detours	S-1
SP-03	Maintenance and Restoration of Roads and Streets	S-1
SP-04	Existing Utilities	S-2
SP-05	Disposal Areas	S-2
SP-06	Contractor Work and Storage Areas	S-3
SP-07	Survey Monuments	S-3
SP-08	Soils Compaction Tests	S-3
SP-09	Signs, Markers and Mailboxes	S-4
SP-10	Water for Compaction	S-4
SP-11	Construct Air Release Valve	S-4
SP-12	Clearing	S-4
SP-13	Non-Pay Items	S-5
SP-14	Water Pipe	S-5
SP-15	Not Used	
SP-16	Testing, Sterilizing and Flushing Water Lines	S-6
SP-17	Install Fitting in Existing Water Main	S-6
SP-18	Installation of Waterline or Sewer Line Casing by Boring	S-7
SP-19	Installation of Water or Sewer Pipe in Casing	S-8
SP-20	Fire Hydrant Guard Posts	S-9
SP-21	Traffic Safety	S-10
SP-22	Removal and Replacement of Pavement	S-10
SP-23	Water Line Pipe	S-10
SP-24	Electrical Continuity of Water Lines	S-11

SPECIAL PROVISIONS INDEX
(Continued)

SP-25	Fire Hydrants	S-11
SP-26	Remove and Replace Culvert	S-11
SP-27	Raise Existing Manhole to Grade	S-12
SP-28	Encase Existing Sanitary Sewer	S-12
SP-29	Modify Existing Manhole	S-12
SP-30	Remove and Replace PPU (Perforated Pipe Underdrain)	S-12
SP-31	Sewer Trench Shoring	S-14

SPECIAL PROVISIONS

SP-01 COMPLETION DATES FOR WORK ITEMS: All work shall be completed on or before

SP-02 ROAD CLOSURES AND/OR DETOURS: Road closures and/or detours may be required during the work for this project. No restrictions are placed on any single street with regard to the Contractor's work schedule, except as stated otherwise herein. However, it shall be required that alternate streets be kept open and in good condition at all times. The Contractor shall inform the City 24 hours prior to establishment of, or revision to, detour routes.

SP-03 MAINTENANCE AND RESTORATION OF ROADS AND STREETS: During the work under this contract, the Contractor shall maintain those roads and streets where his forces have done any work so as to keep the roads and streets passable at all times for automobile traffic, excepting those times when the roads or streets are closed for construction work. The maintenance work shall include but not be limited to grading, shaping, compacting and otherwise maintaining excavated or backfilled areas. Ditches and drainage channels shall be kept clear of obstructions. The Contractor shall cooperate with other contractors who may have obligations to maintain certain streets as detour routes for other projects. Upon completion of the work, the Contractor shall shape and grade all roads and streets, including ditches, on the project to grades and sections as shown on the plans; or, if no grades and sections are shown, to restore the original grade and section. Road and street surfaces shall be compacted so that rutting does not occur under traffic.

At any time when the work is suspended for reason of season, strike, or other cause resulting in withdrawal of Contractor crews from the project site, the Contractor shall shape and grade any roads or streets on which work has been

done. He shall clean all drainage channels and cover all manhole covers and valve box covers within gravel surfaced streets with a minimum of six inches of gravel, graded smooth with the road surface. Maintenance of roads and streets shall then be done by the City until the resumption of work.

SP-04 EXISTING UTILITIES: Existing utilities in the project area include:

1. Underground

   - Telephone
   - Natural Gas
   - Water Lines
   - Culverts
   - Electrical Power
   - Communication Cables
   - Sewer Lines

2. Above Ground

   - Electrical Power
   - Telephone
   - Street Lighting
   - Communication Cables

The locations of these utilities are shown on the plans according to the best available information. The Contractor shall notify each utility organization, in advance, of his intent to work in the vicinity of the various utilities. The Contractor shall exercise all possible care to avoid damaging any existing utilities.

The Contractor shall be responsible for the bracing, sheeting, shoring and underpinning of the excavation walls and adjacent structures and shall perform such bracing, shoring, etc., for all subsurface utilities and structures and all surface utilities and structures with the exception of telephone poles, power poles and appurtenances. The bracing, etc., of said poles and appurtenances shall be performed by the separate utility company having jurisdiction. The cost of bracing those poles designated on the drawings to be braced, shall be paid by the City at no cost to the Contractor. The cost of bracing or shoring any poles not designated on the drawings shall be paid by the Contractor.

SP-05 DISPOSAL AREAS: Disposal areas as shown on the plans are available to the Contractor for disposal of waste materials from this contract. The types of materials which may be placed in each area are indicated, and the Contractor shall place no other materials in the respective areas without written authorization from the Engineer. The placing of materials shall be kept within the limits shown, and no material shall be placed so as to obstruct ditches, driveways, utilities or improvements.

Other Areas: The Contractor may, at his own option, obtain and utilize other disposal areas. It shall be the sole responsibility of the Contractor to obtain the permission of the owner(s) for the use of such area(s), at no additional cost to the City. The Contractor shall hold the City harmless from all claims or complaints arising from the use of any disposal area other than those shown on the plans.

General: All disposal areas shall be operated in a manner so as not to create any hazards to safety or health; nor to be offensive or a nuisance. Trees, logs, brush and debris shall be deposited in lower areas and buried. Upon completion of the work under this contract, all disposal sites shall be dressed up and surfaces graded to drain. Access roads into disposal sites shall be left in a presentable condition, free from deep ruts, spilled waste materials, or unsightly conditions.

Burning of trees, brush or other materials in disposal areas or other areas shall be done only at times and in a manner approved by the Engineer. Burning shall not be done during times when prohibited by City, Borough or State officials having jurisdiction.

SP-06 CONTRACTOR WORK AND STORAGE AREAS: The Contractor shall make his own arrangements for areas and facilities needed by him for the storage of materials, supplies and equipment, parking, and other activities.

SP-07 SURVEY MONUMENTS: Survey monuments shown on the plans or located and marked by the Engineer shall be carefully preserved from damage or disturbance by the Contractor. Where permanent monuments must be removed to permit construction, the Contractor shall give the Engineer two days advance notice before removing the monument, to permit reference points to be established. If monuments are disturbed by the Contractor needlessly or without his having given proper notice, the Contractor shall pay all costs for proper replacement of the monument by the Engineer.

SP-08 SOILS COMPACTION TESTS: Compaction tests specified within the contract plans and specifications consist of the AASHTO T-180.

For the purpose of this contract, the Modified Providence Vibrated Density test conforming to the U.S. Army Corps of Engineers EM-1110-2-1906, Soils Compaction, shall be allowed as a substitution field density technique.

SP-09 SIGNS, MARKERS AND MAILBOXES: Existing traffic control signs, commercial signs, mailboxes, valve markers, manhole markers, or underground utility markers which lie within areas of excavation shall be carefully removed, protected, saved and reinstalled in their original position, all by the Contractor, unless directed otherwise, in writing, by the Engineer.

This item shall be considered incidental to the project and no separate payment shall be made therefor.

SP-10 WATER FOR COMPACTION: The City may, upon written request, supply the Contractor with limited quantities of water to be used for construction activities within this project. The Contractor shall use only an approved hydrant wrench, operate the fire hydrant in a manner approved by the City Water and Fire Department, remove the hose when not in use, and notify the Fire Department of any extended periods of non-use to enable the hydrant to be pumped out.

This item is to be considered incidental to the Project. Any reimbursement for this item shall be included in the bid prices for other contract items.

SP-11 CONSTRUCT AIR RELEASE VALVE

General: At locations indicated on the plans, the Contractor shall construct air release valves as shown in the plans and as described in the specifications.

Measurement: Construction of each air release valve shall include all excavation, materials, installation, connection, shoring, backfilling, compaction and grading necessary to complete the item.

Payment: Payment shall be at the contract unit price for:

Construct Air Release Valve	per each

SP-12 CLEARING:

Scope: This item consists of the clearing of trees, brush, stumps, large roots, trash and debris from areas shown on the plans or designated by the Engineer.

General: The Contractor shall remove all trees, brush, stumps and large roots by sawing, bulldozing, uprooting or other means, in the areas shown on the plans.

The areas shown are approximate, and the clearing within the right-of-way shall be complete, notwithstanding the occurrence of scattered trees or brush outside of the indicated areas. The Contractor shall not disturb any vegetation beyond the property lines, or easement limits, as marked by the Engineer; nor shall he allow any trees or debris from clearing to fall or remain on private property.

Removal:

a) Burning in rights-of-way may be done only when approved by the Chief of the City Fire Department. Material to be burned shall be collected and stacked in the center of the cleared area. The surrounding ground surface for a distance of fifteen (15) feet from the stack(s) shall be cleared of all vegetative matter before any burning is started. Vehicular access shall be provided, in the event that fire control measures become necessary. The Contractor shall attend to all fires as required for safety. Should any fire spread or ignite beyond the stacks being burned, the Contractor shall take all necessary measures to control the unwanted burning.

b) Hauling of materials from clearing shall be to disposal areas only where such materials are permitted as shown on the plans. Hauling shall be done in a manner as to prevent spillage along the route. Materials shall be dumped in portions of disposal areas where they may readily be buried or burned.

Measurement: Measurement of all clearing required under each bid schedule shall be measured as one job.

Payment: Payment at the contract unit price shall consist of full compensation for all clearing, reducing, hauling materials and labor and disposal.

Payment will be made under:

Clearing (All required)	one job

SP-13 NON-PAY ITEMS: At locations on the plans are minor items designated as non-pay items. No separate payment will be made to the Contractor for these items, and any compensation received for performance of same shall be included by the Contractor in his unit bid price for listed contract bid items.

SP-14 WATER PIPE: Water pipe shall be ductile iron pipe where specifically called for on the plans. Fire hydrant lead pipes shall be of the same type pipe (ductile iron or asbestos-cement) as the mains to which they are connected. All other water lines may be either ductile iron or asbestos-cement pipe.

SP-15 Not Used

SP-16 TESTING, STERILIZING AND FLUSHING WATER LINES: Water for testing, disinfecting and flushing water lines shall be furnished by the City, and no water from other sources shall be introduced into the lines.

After the water lines installed under this contract have been tested, sterilized and accepted, they shall be thoroughly flushed. The Contractor shall exercise care to prevent disinfecting solution from excaping from new lines into lines now in use, and will notify the Engineer when any lines are ready to be flushed.

SP-17 INSTALL FITTING IN EXISTING WATER MAIN: At the locations shown on the plans, the Contractor shall make connections to existing water mains. The Contractor shall notify the Engineer not less than 48 hours in advance of any planned water service outage for performing work on an existing water line. The work of cutting into, opening, installing fittings, extensions and valves in an existing line shall be commenced at an early time during a working day, and work shall not be stopped for that day until service has been restored. No existing line shall be cut into until all materials are on hand to make the connections.

Prior to installing a new water line within 50 feet of the point of connecting to an existing water line, the Contractor shall excavate and expose the existing line to determine its exact location and elevation.

The Contractor shall furnish all fittings, pipe and couplings necessary for making each connection. Undamaged pipe sections removed from existing lines may be reused in those lines only, provided that cut ends are properly bevelled. No salvaged rubber gaskets shall be reused; all gaskets shall be new. All pipe, fittings and couplings installed from the connection to the first valve in the extension line shall be rinsed with a 2% solution of sodium hypochlorite or calcium hypochlorite immediately before installing.

The Contractor shall install thrust blocks in accordance with the Standard Details. In addition, fittings and valves installed at the point of connection to an existing line shall have temporary blocks of wood, or shall be tied with galvanized wire, to prevent dislodging before the concrete blocks have hardened.

Special couplings, where required, shall be Smith-Blair No. 433 or approved equal.

The entire system of joints, couplings and pipe from the point of cutting in to the first valve in the new line, shall be left exposed to view until water pressure has been applied, and all joints examined for leaks.

Measurement: The work and materials required to install each new fitting to an existing water main shall be measured as one job, complete; and shall include all fittings, cutting and replacing of existing pipes as required, special couplings, thrust blocks and temporary blocking; but shall not include valves. Gate valves shall be paid for as separate items as specified in Section 7.

This item shall apply only where a waterline was existing on two sides of a new fitting prior to its installation. No measurement will be allowed where a fitting is installed or connection is made to the end of an existing water line.

Payment: Payment shall be made at the contract unit price for:

Install Fitting in Existing Water Main per each

SP-18 INSTALLATION OF WATERLINE OR SEWER LINE CASING BY BORING: The Contractor shall furnish all materials, equipment, tools and labor and do all excavating, backfilling, shoring and bracing to install steel casings under paved roads as shown on the plans.

Materials: The casings shall be welded seamless steel pipe, ASTM A53, Schedule 30, 12-inch size or 18-inch size as shown.

Construction: The Contractor shall notify all owners of underground pipelines, cables and conduits, which will be exposed during excavating, at least 24 hours prior to commencing the excavating. During the work, all facilities exposed by excavating shall be supported and braced in position.

Excavations shall be made at both ends of each casing alignment. Care shall be taken to avoid undercutting pavement edges.

At such time as any slope of an excavation sloughs away to within two feet of a pavement edge or curb, the slope shall be shored to prevent further sloughing. Any pavement or curb which is undermined by the work shall be removed and replaced by the Contractor at his own expense.

The casings shall be installed by jacking while boring at the advance end. No driving of casing by impact hammering will be permitted. During the boring, force shall be maintained continuously on the casing by jacks to insure that the casing face is advanced in close proximity to the boring head. In no event will the boring head be permitted to advance more than one foot (1') beyond the advance end of the casing. If during the boring the Engineer determines from the quantity of soil removed by the boring machine that the bored cavity is larger than the casing by two inches of diameter or more, he may require that the casing be advanced in closer proximity to the boring head.

Jetting or washing of soil from the casing with water will not be permitted until the casing is completely installed in its final position.

To start the installation of a casing, a section shall be accurately positioned in alignment and grade, and shall be supported on timber guides as it is jacked into place. When approximately 10 feet of casing has been jacked into the bored hole, it shall be checked for grade and alignment. If this section of casing varies from the design grade or alignment by two percent (2%) or more, it shall be withdrawn and reinstalled until it conforms within 2% of design grade and alignment. The installed casing in its final position shall not vary from the design grade or alignment by more than 2.5 percent of its length.

Sections of the casing shall be joined by welding. Ends shall be cut square and true and shall be bevelled for 2/3 of the wall thickness. Welds shall be full penetration fillet arc welds and shall be made by at least three full passes. The sections being joined shall be carefully aligned before welding and shall be securely held in alignment during welding. All welds shall be make by experienced pipe welders. All welds shall be cleaned by peening and steel brushing after each pass. The finished weld shall be coated, after cleaning, with hot asphalt.

After the casing has been completely installed, it shall be cleaned of all soil and other loose matter by air jet or by washing with water.

Measurement: Each casing installed shall be measured as one job; and shall include all excavating, shoring, bracing, barricades, and all work and materials to construct the casings as shown and specified.

Payment: Payment shall be made at the Contract Lump Sum for:

Furnish and Install _____-inch by _____feet steel casing. (location)	1 Job

SP-19 INSTALLATION OF WATER OR SEWER PIPE IN CASING: The Contractor shall furnish all materials, equipment, tools and labor and do all excavating, shoring, bracing, backfilling and other work to install ductile iron water pipe in steel casings.

Materials: Pipe shall be ductile iron pipe as specified in Section 7, Paragraph 7-05.2.4. Joints shall be Tyton push-on type.

Wood for slats shall be Western Cedar, No. 2 or better, graded in accordance with the Standard Grading and Dressing Rules of the West Coast Lumber Inspection Bureau, No. 16. Board shall be 2 x 4 size in 8-foot or 16-foot lengths.

Wire for banding shall be galvanized steel, No. 18 steel wire gage or larger.

Construction: Before installing, each section of pipe shall be slatted by banding 2 x 4 boards to the pipe. Each section shall have a total length of slatting of 16 feet. Slats shall be banded in placed by wire bands installed at intervals not exceeding 4 feet, and each board shall have a band within one foot of both ends. Bands shall consist of two wraps of wire with the ends twisted to draw the wire tight. The bands shall be tightened until the wire cuts into the board edges slightly. Before tightening the bands, the boards shall be spaced equally around the perimeter of the pipe. For 10-inch pipe, eight slats shall be installed. For 6-inch pipe, five slats shall be installed.

The slatted pipe shall be pushed into the casing, spigot ends forward. As each bell end is about to enter the casing, the next section shall be jointed. Three bronze wedges shall be installed in each joint. The pipe section being inserted shall be supported and slid along timber slides to hold it in alignment as it enters the casing. The slats on the under side of the pipe may be lubricated with vegetable grease to facilitate the installing.

After all pipe has been installed within a casing, all tools, equipment, blocking and debris shall be removed from within the excavations. The excavations shall be backfilled to the grade of the pipe with sand and gravel, compacted in lifts as specified in Section 7-12. Compaction shall be accomplished using motorized vibratory manual-propelled compactors. The backfill shall be watered during the compacting, and no backfill shall be placed without watering unless the Engineer approves the omission of such watering. The backfill shall be compacted to 95% of maximum density as determined by AASHO Method T 180, from the elevation of the centerline of the pipe entering the casing to the bottom of the excavation.

After the backfill has been placed and compacted up to the grade of the pipe, the lines connecting to the cased pipe may be installed.

Measurement: Water lines installed in casings shall be measured by the lineal foot, from end to end of the pipe actually installed. Unless otherwise ordered by the Engineer in writing, the pipe installed in casing shall consist of the number of full sections of pipe that will equal the length of casing plus a projecting amount of pipe at each end of from one to five feet. No short sections of pipe shall be installed within casing. No short stubs installed outside of the casing for the purpose of providing a plain end for coupling shall be included in the measurement of this item. Measurement of this item shall be to the nearest 0.5 foot, and shall include all pipe, lumber, slatting, banding, backfilling and compacting of excavations at casing ends, testing and sterilizing as specified in Section 7.

Payment: Payment will be made at the contract unit price for:

Furnish and Install _____-inch Ductile Iron Pipe in Casing.	per linear foot

SP-20 FIRE HYDRANT GUARD POSTS: Fire hydrant guard posts shall be installed at locations designated on the plans or by the Engineer, in accordance with the standard detail. Measurement shall be per pair of posts, installed at a single hydrant. Payment shall be made at the unit price bid for:

Furnish and Install Fire Hydrant Guard Posts.	Per Pair

SP-21 TRAFFIC SAFETY: For the purpose of this contract, all barricades and/or signs required to insure the "safety of the public" as noted in Section G6-08 TRAFFIC of the General Conditions, shall be in accordance with the Alaska Traffic Manual, as distributed by the Alaska Department of Transportation.

The Contractor will not be allowed to initiate actual construction until he has submitted, and the Engineer has approved, a suitable traffic plan.

SP-22 REMOVAL AND REPLACEMENT OF PAVEMENT: Where the plans require the removal of pavement for the installation of water lines or sewer lines, the pavement shall be cut with a saw, air chisel or disc.

Backfill: In all areas to be paved or repaved, the entire depth of the trench shall be compacted to 95% of maximum density as determined using AASHTO Method T180. Material shall be placed in lifts of 12 inches maximum loose thickness. The special backfill compaction shall be paid for as provided in Paragraph 8-13 of 7-13.

Pavement: Pavement sections for replacement are shown on the plans. Materials and placing shall conform to the Standard Specifications for Highway Construction, State of Alaska, for Untreated Base Course, Grading D-1, and Hot Plant Mix Bituminous Pavement, Grading C. Base course shall be compacted to 100% of maximum density. If, during the work, the base under the exposed edges of pavement cuts is allowed to cave or slough away, the pavement shall be cut back to expose firm, undisturbed base at all points of joining old to new pavement. Before placing bituminous mixture, exposed edges of existing pavements shall be coated with liquid asphalt or asphalt emulsion. After replacement pavement has been placed, it shall be tested with a 12-foot straightedge at right angles to the road centerline and parallel to the centerline, including joints. Any variation of the surface in excess of ¼ inch shall be corrected by the Contractor, at no additional cost to the Owner.

Measurement: Removal and replacement of asphalt pavement shall be measured by the square yard, as shown on the plans and as marked by the Engineer on the site.

Payment: Payment at the contract unit prices shall include: the removal of existing pavement including cutting, loading, hauling, and disposal; and the replacement of pavement including materials, base course, placing, compacting, and all other items required for the work, complete.

Payment shall be made for:

Remove and Replace Asphalt Pavement	per square yard

SP-23 WATER LINE PIPE: The Contractor may, at his option, supply pipe with superior strength characteristics than that specified in section 7-05.23 of the technical provisions providing other portions of the specifications are also satisfied.

SP-24 ELECTRICAL CONTINUITY OF WATER LINES: Section 7-05.3.4. is herewith modified by the addition of the following paragraph:

> "The Contractor may elect, however, to substitute continuity straps consisting of stranded or solid, rubber or plastic coated, number 2 copper wire, connected to provide electrical continuity across successive pipe lengths."

SP-25 FIRE HYDRANTS: Section 7-08.2.1 General item (c) is herewith modified by deletion of the word "clockwise" and substitution of the word "counter clockwise" therefor.

SP-26 REMOVE AND REPLACE CULVERT:

General: At locations shown on the plans, existing culverts shall be carefully removed, salvaged, delivered to the City maintenance yard, and there stockpiled as directed by the Engineer for future use by the City.

The Contractor shall, after completion of utility installation in the immediate area, replace removed culverts by substitution of new culverts of the specified diameter, length and gauge, at the same grades that existed prior to initiation of construction.

New culverts shall be constructed in conformance with Section 6, Corrugated Metal Pipe Culverts, of the Technical Provisions.

Measurement: Measurement shall be made by the lineal foot for the various sizes and types of culverts installed.

Payment: Payment shall be made at the contract unit prices and shall include removal hauling, stockpiling, furnishing, installing, excavation, backfilling, compaction of all materials and all other work for this item, complete in place.

Payment will be made for:

Remove and Replace Culvert (diameter x length x gauge)	per lineal foot

SP-27 RAISE EXISTING MANHOLE TO GRADE: The Contractor shall furnish and install one 18" high by 48" diameter sanitary manhole barrel section to the grade shown on the plans.

Measurement: The item shall be measured as one job, complete, in place and shall include all excavating, shoring, bracing, barricades, dewatering, freight and all work and materials required to complete the item as specified and shown.

Payment: Payment shall be made at the contract lump sum for:

Furnish and Install New Manhole Barrel Section for Existing Manhole	1 Job

SP-28 ENCASE EXISTING SANITARY SEWER: Section 7 of the Technical Provisions, Construction Specifications for Water Systems, is herewith modified by deletion of subsections 7-04.3 Measurement and 7-04.4 Payment and substituting therefor the following:

7-04.3 Measurement: Encasing sewer mains with concrete (or replacing) will be measured as units, complete in place.

7-04.4 Payment: Basis of payment for this item shall be in accordance with Section 7-04.3.

Item	Pay Unit
Encase existing Sanitary Sewer	per each

SP-29 MODIFY EXISTING MANHOLE: At the intersection of Walker Lane and Tern Streets, the Contractor shall modify an existing manhole as described herein:

General: The Contractor shall connect to the existing 10" sewer line at the specified point downstream from the existing manhole and extend new ductile iron pipe southerly through the existing manhole at the line and grade specified. This new pipe will pass through the manhole elevated above the bottom invert. Prior to installation of the elevated section, the Contractor shall modify the pipe by cutting and grinding to the dimensions indicated on the plans. The contractor shall grout at points of penetration through the existing manhole as is done with new manholes.

Measurement and Payment: No separate measurement or payment will be made for this item but shall be included in the contract price for furnishing and installing 10" ductile iron pipe.

SP-30 REMOVE AND REPLACE PPU (Perforated Pipe Underdrain):

General: At those locations indicated on the plans as having existing underdrains that conflict with installation of water and sewer lines, the Contractor

may (with written permission of the Engineer) remove such underdrains and replace same at the same locations, horizontally and vertically, after completion of the utility installation in the immediate area. The Contractor shall, by mechanical or manual means, separate removed sections of underdrain from the backfill material and dispose of same at a Contractor supplied disposal site. Construction of new underdrains shall conform to the plans and specifications.

Materials:

Pipe. Pipe shall consist of corrugated aluminum pipe for underdrain and conform to the requirements of AASHTO M 197.

Porous Backfill. Porous backfill shall consist of appropriate sands or sandy gravel conforming to the specifications for "pit run gravel placed in trench".

Guide Posts. Guide Posts shall be salvaged from those existing posts and reused. Any posts damaged by careless removal shall be replaced in kind, painted to conform, at no additional expense.

Fittings. Fittings shall consist of factory fabricated wyes, bands and elbows where required for replacement of the removed underdrain system, and shall conform to the same materials specifications as required for pipe.

Construction:

Pipe Installation. Trenches shall be excavated to the dimensions and grade required by the plans or as directed. A minimum 4-inch bedding layer of porous backfill material shall be placed and compacted in the bottom of the trench for its full width and length.

Subdrain pipe of the type and size specified shall be embedded firmly in the bedding material.

Bedding and backfill material shall be compacted to 95% maximum density per AASHTO T 180.

Perforated pipe shall normally be placed with the perforations down. The pipe end sections shall be joined securely with the appropriate coupling fittings or bands.

After the pipe installation has been inspected and approved, porous backfill material shall be placed to a height of 36" above the top of pipe. Care shall be taken not to displace the pipe or the covering at open joints. The remainder of the porous backfill material shall then be placed and compacted to the required height. Any remaining portion of trench above the porous backfill shall be filled with granular or impervious material, as may be specified, and thoroughly compacted.

Underdrain Outlets. Trenches for underdrain outlets shall be excavated to the width and depth shown on the plans. Pipe shall be laid in the trench with all ends firmly joined by the applicable methods and means. After inspection and approval of the pipe installation the trench shall be backfilled with suitable material in layers and compacted as provided above.

Method of Measurement. Underdrains and outlets will be measured by the linear foot for pipe plus cleanout of the type and size specified, including all excavation, backfill, dewatering, fittings, bands, salvaging, disposal.

Corrugated Metal pipe cleanouts, including the castiron cover and timber marker post will not be measured for payment, but will be considered incidental to the price paid for underdrains.

Porous backfill material will be paid for at the contract unit price per cubic yard completed and accepted using plan dimensions for trench width and depth, and linear feet of length of perforated pipe, as staked in the field.

Basis of Payment. The accepted quantities, determined as provided above, shall be paid for at the contract price per unit of measurement, for each of the particular pay items shown in the bid schedule, complete in place.

Item	Pay Unit
Remove and Replace Perforated Pipe Underdrain (PPU)	linear foot
Pit Run Gravel in Trench	cubic yard

SP-31 SEWER TRENCH SHORING

General: At specified locations on the plans, the Contractor shall be required to construct and maintain sewer trench shoring during the excavation, installation of pipe, and backfill stages within the areas so noted. This item in no way relieves the Contractor of other requirements for shoring or bracing as outlined in the Technical Provisions.

The Contractor shall submit to the Engineer, for review, his proposed method of shoring and bracing, including calculations and shop drawings.

Responsibility for proper and adequate trench shoring and bracing shall be solely the responsibility of the Contractor.

Shoring and bracing shall be designed and constructed to conform to the following:

1. It shall permit the installation of pipe and appurtenances in conformity with the plans and specifications.

2. All provisions of the State of Alaska, Department of Transportation Utility permit shall be complied with.

3. State of Alaska Occupational Safety and Health compliance regulations met.

4. No excavation shall be performed within eight feet horizontally of existing highway pavement, nor shall surface subsidence be permitted, nor shall excavation outside of the highway right-of-way be permitted

Measurement and Payment: This item shall be considered incidental to the project and no separate payment shall be made therefor. Any reimbursement for this item shall be included in the bid prices for other contract items.

SECTION 6

CORRUGATED METAL PIPE CULVERTS

6-01 DESCRIPTION

This item shall consist of corrugated metal pipe of the sizes and dimensions shown on the plans, furnished and installed at such places as are designated on the plans and profiles, or by the Engineer, in accordance with these specifications and in conformity with the lines and grades given.

6-02 MATERIALS

Steel Pipe. Steel pipe shall be corrugated galvanized metal culvert pipe conforming to the requirements of AASHTO M36. The minimum thickness of pipe for 30 inch and 36 inch sizes shall be 12 gauge, and for sizes 12 inch through 24 inch, 14 gauge.

Culvert Markers. Refer to Project Plans.

6-03 EQUIPMENT

All equipment necessary and required for the proper construction of culverts shall be on the project, in first class working condition, and shall have been approved by the Engineer before construction is permitted to start.

The Contractor shall provide hand tampers and pneumatic tampers to obtain the compaction of the pipe bed and the backfill as specified.

6-04 PIPE BEDDING

The culverts to be constructed for this project shall be installed in fills to be constructed over existing ditches and drainage channels. The existing ground surface shall be stripped and cleared of all unsuitable materials as specified in Section 2, and the first layers of the fill shall be placed. No pipe shall be installed until the fill has been constructed to the mid-height of the intended position of the culvert. The bed for the pipe shall be so shaped that at least the lower quarter of the pipe shall be in continuous contact with the bottom of the trench. No rock or noncushioning material shall be allowed within four inches of the bottom of the pipe. Prior to placing the pipe, the bed shall be thoroughly compacted, to the density specified for the embankment.

6-05 PLACING PIPE

The pipe shall be laid with the separate sections joined firmly together with coupling bands, with outside laps of circumferential joints pointing upgrade, and with the longitudinal laps on the sides. Any metal in steel pipe or bands which is not protected thoroughly by galvanizing shall be coated with a suitable asphalt paint.

Proper facilities shall be provided for lowering the pipe when it is to be placed in a trench. The pipe shall be laid carefully and true to lines and grades on a bed which is uniformly firm throughout its entire length. Any pipe which is not in true alignment, or which shows any undue settlement after being laid or is damaged, shall be taken up and relaid or replaced without extra compensation.

Where strutting of round pipe is required by the Engineer, the vertical diameter shall be increased five percent by means of suitable jacks applied after the entire length of the culvert has been placed in the prepared bedding and before any fill is placed over the pipe. The five percent increase shall be uniform for the full length of the culvert except that, when so indicated, it may be gradually reduced under the embankment side slopes to zero at the culvert ends. The pipe shall be maintained in this shape by means of sills and struts or by horizontal ties.

Where factory-formed elliptical pipe is strutted, no additional increase of the vertical diameter will be required.

Ties and struts shall be left in place until the embankment is completed and compacted, unless otherwise directed by the Engineer.

Pipe shall not be laid on frozen ground.

6-06 BACKFILLING

The embankment around a culvert shall be completed in a reasonable time after the pipes are installed therein unless other protection of the pipe is directed by the Engineer. The backfill material containing stones or rock exceeding three inches in diameter shall not be used adjacent to the pipe or until the fill over the pipe exceeds one foot. Backfill material containing rock three inches in diameter or larger shall not be used in trenches under paved areas. Special care shall be used in placing the backfill. Great care shall be used to obtain thorough compaction under the haunches and along the sides to the top of the pipe.

The backfill shall be placed in loose layers not exceeding six inches in depth under and around the pipe, and not exceeding eight inches over the pipe. Successive layers shall be added and thoroughly compacted by hand and pneumatic tampers, approved by the Engineer, until the embankment has reached a depth of one foot over the top of the pipe. Backfilling shall be done in such a manner as to avoid injurious top or side pressures on the pipe. The backfill shall be compacted to not less than the density required for the embankment, as specified in Section 2.

6-07 INSPECTION

Prior to final approval of the drainage system, the Engineer, accompanied by the Contractor's representative, shall make a thorough inspection, by an appropriate method, of all culverts installed under this contract. Any indication of defects in material or workmanship, or obstruction of flow in the pipe system, shall be further investigated and corrected as necessary. Defects due to the Contractor's negligence shall be corrected by the Contractor without additional compensation, and as directed by the Engineer.

6-08 MEASUREMENT

This item shall be measured along the flowline of the pipe, excluding entrance and exit flared end sections, and shall include the cost of furnishing and installing the size and type pipe specified in the Bid Proposal, excavation and backfill, furnishing and installing all trench bracing, all fittings required to complete the pipe drain, as shown on the plans, the material for and the making of all joints, all connections to existing drainage pipes, structures and channels, structural bedding material, and culvert end markers (two per culvert) as detailed on the project plans.

6-09 PAYMENT

Payment shall be made under:

Corrugated Metal Pipe Culverts (specify size and gauge)	linear feet

SECTION 7

CONSTRUCTION SPECIFICATIONS FOR WATER SYSTEMS

7-01 GENERAL

7-01.1 Scope of Work

The Contractor shall furnish all material, labor and equipment necessary to excavate, install and backfill for water pipe lines and appurtenances, to make connections to existing water mains where indicated on the plans, and to test, disinfect and flush the lines.

7-01.2 Stakes

The Engineer will lay out in the field the alignment and grade of work to be done under the Contract. When once so laid out, the Contractor shall be responsible for the preservation of all line stakes, grade stakes and hubs. In the event of their loss or destruction, the Contractor shall pay all costs for their proper replacement. The line and grade for pipe lines will be given from hubs set every fifty (50') feet on a line parallel to and at a uniform distance from the line of pipe. The Contractor shall be responsible for, and pay all costs for the transfer of the control points from the reference hubs to such hubs or batter boards as he may desire or need for the prosecution of the work. The ground line profile refers to the elevation of the ground directly above the centerline of pipe and the grade line refers to the elevation of the bottom of pipe, except where otherwise noted. Grade elevations shown for fittings refer to the bottom of the pipe entering the fittings.

7-01.3 Excavation

All excavation shall be unclassified and the Contractor shall do all excavation of whatever substances encountered, including rock and frozen ground, to the depth shown on the plans.

7-01.4 Measurement and Payment

The contract price for each bid item shall constitute full compensation for furnishing all plant, labor, equipment, appliances and materials, and performing all operations necessary to construct and complete the section in accordance with the requirements of the specifications and the applicable drawings. Payment for each bid item shall be considered as full compensation, notwithstanding that minor features of work to complete the section may not be mentioned. Deviation in the actual quantities either above or below the estimated quantities shown for each item shall not be made a basis for adjustment in any of the contract unit prices except as otherwise specified in the General Provisions. Work paid for under one item will not be paid for under another item.

7-02 TRENCH EXCAVATION AND BACKFILL

7-02.1 General

This work shall consist of all excavation and backfill required for pipe line installation and all other related work as specified in this section.

7-02.2 Clearing

The Contractor shall clear all brush, trees, debris, trash, garbage, etc. from right-of-way or easement areas as is necessary to accomplish the water line construction and to prevent such extraneous materials from being utilized in the backfill. Debris from clearing shall be disposed of by the contractor, in accordance with local and state regulations.

7-02.3 Removing and Replacing Fences

At locations where fences are shown on the plans, the Contractor shall remove the fences located in the existing right-of-way or easement areas and replace these fences at locations as staked by the Engineer. Fences shall be placed at the new location in such a manner as to produce a fence of equal construction quality to that of the fence moved.

7-02.4 Removing Existing Structures and Dwelling Units, Usable Oil Barrels, Machinery, Automobiles and Miscellaneous Personal Property from Rights-of-Way or Easements

At locations where trailers, sheds, dwelling units, oil barrels, machinery, automobiles and miscellaneous personal property are presently occupying space within rights-of-way or easement lines, the Contractor may exercise the option of removing these structures from the right-of-way to the property owner's lot or the Contractor may do such bracing and shoring as is necessary to protect these structures and to perform the work required. In the case of movement of oil barrels, dwelling units, personal property, etc., the Contractor shall exercise care so that the property owner is inconvenienced as little as possible. In the cases of interrupting fuel services from oil barrels, service shall be restored to the property owner immediately after moving the barrels.

7-02.5 Removal and Replacement of Culverts

All culverts located within the cross-section of the trench or crossing the trench shall be removed or shored up as directed by the Engineer. Culverts temporarily removed will be returned to their original position. Any damage to culverts as a result of construction under this contract will be repaired or the culverts replaced in kind by the Contractor. The culverts affected as described above will be left free of dirt and debris as directed by the Engineer.

7-02.6 Removal and Disposal of Abandoned Pipe and Fittings Encountered In Excavation

When pipe and fittings which are abandoned or are to be replaced are encountered in the excavation for water line or appurtenances, they are to be removed and

disposed of at disposal sites approved by the Engineer. Care shall be used in excavating material deemed salvageable by the Engineer. The material shall be transported to the City yard or other area designated by the Engineer.

7-02.7 Removal of Existing Paving

Where the plans indicate the removal of existing concrete or asphalt paving for installation of the water lines, paving shall be removed in a manner that will produce a straight, uniform edge along the section removed. Method of producing the straight edge shall be by cutting the section to be removed with an air chisel, disc, or by other methods as approved by the Engineer.

After the trench has been backfilled and compacted and prior to replacement of the pavement, when asphaltic concrete pavement is to be replaced, an additional six (6") inches minimum will be cut from each edge of the original cut. Pavement removed beyond the limits shown on the plans or as directed by the Engineer, shall be replaced at the Contractor's expense.

7-02.8 Utilization of Excavated Material

Unsuitable material removed from the excavation shall be cast aside and separated from usable material during excavation. Usable material removed from excavation shall be kept separate from unsuitable material and shall be used where practical for fill and backfill as directed by the Engineer. Unsuitable material shall then be placed in the trench over such depths of suitable fill and backfill as the Engineer shall direct.

7-02.9 Trench Section

Trench depth shall be as shown on the plans and as staked in the field. Unless otherwise approved by the Engineer, the maximum trench bottom width for pipe up to thirty-three (33") inch diameter shall be O.D. +18"; for pipe over thirty-three (33") inch diameter, the maximum shall be O.D. +24" (see Standard Details). Width of trench shall be six (6") inches minimum each side of the pipe joint.

7-02.10 Excavation for Joint Holes

Excavation for joint holes shall be in accordance with the pipe manufacturer's recommendations or as directed by the Engineer.

7.02.11 Unauthorized Excess Excavation

All excavation below the required grade shall be backfilled with sand or gravel and thoroughly compacted as directed by the Engineer. All unauthorized excess excavation and backfill shall be at the expense of the Contractor. Approval must be obtained from the Engineer before excavating below the proposed grade of pipe.

7-02.12 Water Removal

Ground adjacent to the excavations shall be graded to prevent water from running into the trench. The Contractor shall remove, by pumping or other means approved by the Engineer, any water accumulated in the excavation which in the opinion of the Engineer is detrimental to the proposed installation of the water lines, appurtenances and structures.

7-02.13 Bracing and Shoring

The Contractor shall, at his own expense, do all bracing, sheathing, shoring and underpinning as may be necessary to perform and protect all excavations as required for safety to workmen, to work being performed, to exposed or unexposed existing installations or nearby structures, or to conform to governing laws and/or ordinances. The Engineer may direct the Contractor to brace, sheath and shore trenches and other excavations where, in his opinion, proper precautions are not being taken.

7-02.14 Backfilling of Trench

At such times as the Engineer may direct, but only after the pipe lines and appurtenances have been properly completed and inspected, the trenches and appurtenant structures shall be backfilled. Backfill to one (1') foot of cover over the top of the pipe shall be of approved selected material grading generally from sand to two (2") inches containing no large frozen clods. Backfill to one (1') foot of cover over the top of the pipe shall be evenly placed and carefully deposited under, around and over the pipe in maximum six (6") inch layers which shall be thoroughly compacted. Driveways, road crossings and other areas where traffic crosses the trench shall be backfilled completely within 72 hours after the trench is excavated unless otherwise approved.

7-02.15 Backfilling in Roadways, Streets and Alleys

Backfilling in roadways, streets, alleys or easements shall be performed in such a manner as to restore the surface as nearly as possible to its original surface elevation and condition, or to grade and elevation as staked by the Engineer.

7.02.16 Water Compaction

Water for compaction shall be used as approved by the Engineer.

7-02.17 Measurement

7.02.17.1 General

Trench excavation and backfill will be measured by the linear foot (horizontal along the pipe centerline) for the various depths as set forth in the bid proposal. Payment depth will be from the ground surface immediately prior to trench excavation to the bottom of the trench. If excavation is to be done in

streets or alleys for changing surface grades or removal of unsuitable materials from the surfaces, the depth of trench shall be from the bottom of the trench to the ground surface as it exists after all surface excavation has been completed. It is the intent of this clause to eliminate double payment for excavation common to the separate phases of the Contract.

7-02.17.2 Fire Hydrants

Trench excavation and backfill for fire hydrant leads will be measured from the center of the tee on the main line to the center of the fire hydrant.

7-02.18 Payment

7-02.18.1 General

Payment shall be in accordance with Section 7-01.4.

Item	Unit
Excavate and backfill trench, 0 feet to _____ feet depth	Linear Foot

7-03 DISPOSAL OF UNSUITABLE OR SURPLUS MATERIAL FROM TRENCH

7-03.1 General

This work consists of hauling away of material deemed as unsuitable or surplus by the Engineer, encountered in trench excavation.

7-03.2 Construction

The Contractor shall use care in separating this material from usable material as provided under Section 7-02.8. Disposal areas shall be as specified in the Special Provisions.

7-03.3 Measurement

Measurement of this item will be per cubic yard. The Contractor will not be paid for the disposal of material cast aside and not actually removed from the job site. The maximum trench area which will be used for computing quantities under this item shall be in accordance with Standard Details.

7-03.4 Payment

Payment shall be in accordance with Section 7-01.4.

Item	Unit
Dispose of Unsuitable Material from Trench	Cubic Yards

7-04 ENCASING SEWER MAINS WITH CONCRETE

7-04.1 General

The work under this item shall consist of encasing sewer mains with concrete as shown on the plans or directed by the Engineer; or of replacing those sections of sewer main with ductile iron pipe.

7-04.2 Construction

7-04-2.1 Encasement

Where it is necessary to cross over or under a sewer line with a water main and the sewer main is not cast or ductile iron with water-tight connections, or where the Engineer may direct, the sewer main shall be encased in a minimum thickness of four (4") inches of concrete for a distance of ten (10') feet perpendicular to the waterline. Welded wire fabric or other type of wire mesh approved by the Engineer shall be placed around the sewer main prior to encasement with concrete to minimize cracking. Construction of concrete encasement will be in accordance with details as shown in the Plans and Standard Details.

7-04-2.2 Replacement

At the option of the Contractor, or if specified on the plans, a section of sewer main to be encased or replaced shall be removed, and ductile iron pipe shall be installed in its place in lieu of encasing with concrete. Ductile iron pipe shall be as specified in paragraph 7-05.2.3. Special couplings, as required, shall be Smith-Blair No. 441 or 433, or approved equal. The pipe shall be installed in alignment and on grade with the existing sewer.

7-04.3 Measurement

Encasing sewer mains with concrete or replacing will be measured by the linear foot of sewer main encased or replaced. Excavation in excess of normal trench excavation required to accomplish the encasement or replacement shall be considered incidental.

7-04.4 Payment

Payment shall be in accordance with Section 7-01.4.

Item	Pay Unit
Encase or replace Sanitary Sewer	Lin. Ft.

7-05 FURNISH AND INSTALL PIPE

7-05.1 General

This work shall consist of furnishing and installing water pipe and fittings of the types, classes and sizes required on the plans. The Contractor shall install them in accordance with these specifications and in conformity with the lines and grades given on the plans, unless otherwise directed by the Engineer.

7-05.2 Material

7-05.2.1 Asbestos-Cement Pipe

Asbestos-cement pipe will be used only when it is specifically called for on the plans and bid proposal.

Pipe shall conform to the latest revision of A.W.W.A. Specification No. C 400 for asbestos-cement pipe. The pipe shall be furnished in thirteen (13') foot lengths. Unless otherwise indicated on the plans, pipe shall be Class 150.

Cast iron fittings for use with asbestos-cement pipe shall conform to the latest revisions of A.W.W.A. Specification C 110, 250 p.s.i, pressure rating, with cement-mortar lining. Fittings shall be all-bell mechanical joint, or push-on joint ("Ring-Tite" or "Fluid-Tite"). Where required, Asbestos-Cement adaptors shall be furnished for connecting pipe to fittings.

7-05.2.2 Cast Iron Pipe

Cast iron pipe and fittings shall conform to the latest revision of A.W.W.A. Specification C 106, Class 150, with cement-mortar lining conforming to A.W.W.A. Specifications C 104, unless otherwise specified on the plans. Cast iron fittings shall be all bell unless otherwise indicated on the plans or called for in the Specifications, conforming to the latest revision of A.W.W.A. Specification C110 for 250 psi pressure. Rubber gasket joints for cast iron pipe and fittings shall conform to the latest revision of A.W.W.A. Specification C 111.

7-05.23 Ductile Iron Pipe

Ductile iron pipe shall conform to the latest revision of A.W.W.A. Specification C151, thickness Class 50, with cement-mortar lining conforming to A.W.W.A. Specification C 104 unless otherwise specified in the plans or as called for in the Specifications. Fittings for use with ductile iron pipe shall be gray-iron or ductile-iron conforming to AWWA Specification C110 for 250 or 350 psi pressure, with cement-mortar lining. Fittings shall be all bell unless otherwise shown on the plans. Rubber gaskets for joints shall conform to the latest revision of A.W.W.A. Specification C 111. Ductile iron pipe shall be used where shown on the Plans or called for in the specifications. Ductile iron pipe may be used at the option of the Contractor in place of cast iron pipe shown in the plans or called for in the Specifications.

7-05.2.4. Galvanized Wrought-Iron Pipe. Malleable Iron Fittings

Wrought iron pipe shall conform to the latest revisions of Federal Specification WW-P-441c, Class "A" Standard Weight. Fittings shall include elbows, tees, crosses, branches, bushings, plugs, unions and reducers and shall be malleable iron screwed fittings conforming to the latest revision of Federal Specification WWP-521F Type II. All pipe and fittings shall be galvanized to meet the requirements of applicable Federal Specifications.

7-05.2.5 Special Couplings

Couplings for joining different types of pipe, cutting in, and closure joints shall be Smith-Blair No. 433 or approved equal.

7-05.3 Construction

7-05.3.1 Installation

Pipe and accessories shall be handled in such manner as to insure delivery to the trench in sound, undamaged condition. Particular care shall be taken not to injure the pipe coating. If the coating or lining of any type of pipe or fitting is damaged, the repair shall be made by the Contractor at his expense and in a satisfactory manner. Pipe shall be carried into position and not dragged. Use of pinch bars and tongs for aligning or turning the pipe will be permitted only on the bare ends of the pipe. The interior of the pipe and accessories shall be thoroughly cleaned of foreign matter before being lowered into the trench and shall be kept clean during laying operations by plugging or other approved methods. Before installation, the pipe shall be inspected for defects, and where required by the Engineer, shall be tapped with a light hammer to detect cracks. Material found to be defective before or after laying shall be replaced with sound material without additional expense to the City. Rubber gaskets that are not to be installed immediately shall be stored in a cool, dark place and out of the direct rays of the sun.

Cutting of pipe shall be done in a neat and workmanlike manner without damage to the pipe. Unless otherwise authorized by the Engineer or recommended by the manufacturer, cutting shall be done with an approved type mechanical cutter. Wheel cutters shall be used when practicable. Cut ends of pipe shall be bevelled or machined as recommended by the manufacturer.

Where the location of the water pipe is not clearly defined by dimensions on the drawings, the water pipe shall be kept at least (10') feet horizontally from any sewer. Where the drawings show sanitary sewers and water lines closer than ten (10') feet, the sewer shall be encased as specified under Section 7-04.

Maximum allowable deflections from a straight line or grade, as required by vertical curves, horizontal curves or offsets, shall be as recommended by the manufacturer. If the alignment requires deflections in excess of the above limitations, special bends or a sufficient number of shorter lengths of pipe shall be furnished to provide angular deflections within the limits allowable.

7-05.3.2 Alignment and Grade

Grades shall be carried by means of a test grade wire firmly supported by batter boards not more than twenty-five (25') feet apart. Not less than three shall be in use at one time. Grades shall be checked constantly and whenever the batter boards show a discrepancy in grade, all work shall be stopped and the Engineer notified so that the error can be corrected before proceeding with the work. Alternate methods of carrying grade may be employed if approved by the Engineer. If grade is carried by surveyor's level, readings shall be obtained from two bench marks at each set-up.

The pipe shall be so laid in the trench that after the line is completed, the interior surface thereof conforms to the grades and alignment shown on the plans or as given by the Engineer. A maximum three-tenths (3/10) foot deviation from design elevation will be allowed, but at no time shall a given length of pipe have a reverse grade from that shown on the plans. A maximum five-tenths (5/10) feet from design alignment will be allowed; however, the pipe shall be generally straight to the eye unless otherwise called for on the plans.

All adjustments to line and grade shall be done by scraping away or filling the earth under the body of the pipe and not by blocking or wedging up.

7-05.3.3 Placing and Laying

Not more than three hundred sixty (360') feet of trench will be kept open ahead of the pipe being laid.

Concrete thrust blocks of the type shown on the Standard Details shall be installed where the pipe line changes alignment, utilizing a tee, cross, bend or similar fitting. Concrete shall test two thousand (2,000#) pounds per square inch compressive strength after twenty-eight (28) days.

Pipe and accessories shall be carefully lowered into the trench by means of derrick, ropes, belt slings or other suitable equipment. Under no circumstances shall any of the water main materials be dropped or dumped into the trench. Care shall be taken to avoid abrasion of the pipe coating. Poles used as levers or skids shall be of wood and shall have broad flat faces to prevent damage to the pipe or coating. Except where necessary, in making connections with other lines or as authorized by the Engineer, pipe shall be laid with thebells or recesses facing in the direction of laying. The full length of each section of pipe shall rest solidly upon the pipe bed with recesses excavated to accommo-

date the joints. Pipe that has the grade or joint disturbed after laying shall be taken up and relaid. Pipe shall not be laid in water or when trench conditions are unsuitable for the work. Water shall be kept out of the trench until the jointing is completed. When work is not in progress, open ends of pipe, fittings and valves shall be securely closed so that no trench water, earth or other substance will enter the pipes or fittings. Where any part of the coating or lining is damaged, the repair shall be made by the Contractor at his expense and in a satisfactory manner. Pipe ends left for future connections shall be valved, plugged or capped and anchored as shown on the plans or as directed by the Engineer.

7-05.3.4 Jointing

Cast Iron Pipe and Ductile Iron Pipe. All jointing shall be in conformance with the latest revisions of A.W.W.A. Specification C 600, Sec. 9.

If mechanical joint pipe is used, joints shall be made using lead-tipped rubber gaskets conforming to the latest revision of A.W.W.A. Specification C111. If push-on joints are used, two silicon-bronze wedges (as furnished by U.S.Pipe Co., or equal) shall be inserted at each joint to establish electrical conductivity across the joint for the purpose of thawing the line if necessary.

Poured Joints. Where pipe is to be connected to standard bell cast iron fittings, valves and/or hydrants, the joint shall be caulked with lead. The spigot end shall be accurately centered in the bell and the rear portion of the annular space shall be tightly packed with square braided hemp or untarred twisted jute leaving a space not less than two and one-half (2-1/2) inches in depth for the lead or joint compound. Lead for caulking shall be common desilverized lead conforming to ASTM Specification B-29. After the joint is poured and when lead has cooled to the temperature of the pipe, the lead shall be caulked until thoroughly compacted making a watertight joint without straining the pipe or bells. Poured joints will be used only when connecting new construction to old construction. The Engineer may direct the Contractor to use Bell Joint Leak Clamps. This clamp will be furnished by the City at no cost to the Contractor.

Cast Iron Fittings. All pipe to fitting joints shall be made with all bell mechanical joint fittings or push-on joint fittings unless otherwise indicated on the plans or called for in the Specifications. Push-on joints shall have two bronze wedges inserted at each joint, for cast iron or ductile iron pipe. Mechanical joints shall be made using lead-tipped rubber gaskets conforming to A.W.W.A. Specification C111.

Galvanized Wrought-Iron Pipe, Malleable Iron Fittings. Threads shall be neatly cut with sharp tools and the jointing procedure shall conform with best practice. Before jointing, all scales shall be removed from pipe by some suitable means, such as pounding. After cutting, all pipe shall be reamed. All pipe shall be screwed together with an application of graphite and engine oil or some other approved pipe compound shall be applied to the male threads only. Once a joint

has been screwed up, it shall not be backed off unless the threads are re-cleaned and new compound applied. This application shall be neatly made and all oil, graphite and dirt shall be thoroughly wiped off the inside of every joint.

Flange Connections. Wherever flange connections are shown on the plans, called for in the Specifications or required in the work, the flanges and fittings shall conform to American National Standards Institute, Standard B 16.1 for 125 psi pressure. Gaskets eight (8") inches outside diameter and smaller shall be one-sixteenth (1/16) inch thick. Those over eight (8) inches in diameter shall be three thirty-seconds (3/32) inches thick. Bolts shall have rough square heads and hexagonal nuts made to American Standard rough dimensions and shall be chamfered and trimmed. Nuts and bolts shall be cadmium-plated.

Connect Water Line to Existing Main. At the locations shown on the plans, the Contractor shall make connections to existing water mains. The Contractor shall notify the Engineer not less than 48 hours in advance of any planned water service outage for performing work on an existing water line. The work of cutting into, opening, installing fittings, extensions and valves in an existing line shall be commenced at an early time during a working day, and work shall not be stopped for that day until service has been restored. No existing line shall be cut into until all materials are on hand to make the connection.

Prior to installing a new water line within 50 feet of the point of connecting to an existing water line, the Contractor shall excavate and expose the existing line to determine its exact location and elevation.

The Contractor shall furnish all fittings, pipe and couplings necessary for making each connection. Undamaged pipe sections removed from existing lines, may be reused in those lines only, provided that cut ends are properly beveled. No salvaged rubber gaskets shall be reused; all gaskets shall be new. All pipe, fittings and couplings installed from the connection to the first valve in the extension line shall be rinsed with a 2% solution of sodium hypochlorite or calcium hypochlorite immediately before installing.

The Contractor shall install thrust blocks in accordance with the Standard Details. In addition, fittings and valves installed at the point of connection to an existing line shall have temporary blocks of wood, or shall be tied with galvanized wire, to prevent dislodging before new construction is completed and/or before the concrete blocks have hardened.

Special couplings, where required to affect the joining shall be Smith-Blair No. 433 or approved equal.

The entire system of joints, couplings and pipe from the point of cutting in to the first valve in the new line, shall be left exposed to view until water pressure has been applied, and all joints examined for leaks.

7.05.35 Hydrostatic Tests

General. After laying, all water mains shall be subjected to both pressure and leakage tests. Equipment for testing and all costs for labor, material and supplies shall be furnished by the Contractor at his own expense and no extra payment will be made therefor. The Engineer shall have the right to test and approve all gauges used. Where any section of a main is provided with concrete thrust blocks for fittings or hydrants, the hydrostatic pressure test shall not be made until at least five (5) days after installation of the thrust blocks unless otherwise approved. In those instances where connection is made to an existing water main and no valve is installed at the connection to the existing main, the Contractor shall suitably blank off or plug the outlet leading to the existing main before making the field tests.

Pressure Test. After the pipe is laid, the joints completed, the fire hydrants permanently installed and the trench partially backfilled leaving the joints exposed for examination, the newly-laid piping or any valved section of piping shall be subjected for one hour to a hydrostatic pressure test of 150 pounds per square inch. After stopping pumping, the pressure shall not drop abruptly. Each valve shall be opened and closed several times during the test. Exposed pipe, joints, fittings valves and hydrants shall be carefully examined during the open-trench test. Leaking rubber-gasketed joints shall be remade using new gaskets if necessary. Cracked or defective pipe, mechanical joints, fittings, valves or hydrants discovered in consequence of this pressure test shall be removed and replaced with sound material. The test shall then be repeated until the results are satisfactory.

Leakage Test. A leakage test shall be conducted after the pressure test has been satisfactorily completed. The duration of each leakage test shall be at least two hours and during the test the main shall be subjected to a pressure of 150 pounds per square inch. Leakage for any newly laid pipe or any valved section thereof is defined as the quantity of water that is necessary to maintain the specified leakage test pressure after the pipe has been filled with water and the air is expelled. No piping installation will be accepted until the leakage is less than the number of gallons per hour as determined by the formuls: $L = 0.00054\ ND\sqrt{P}$, in which L equals the allowable leakage in gallons per hour; N is the number of joints in the length of pipeline tested; D is the nominal diameter of the pipe in inches; and P is the average test pressure during the leakage test in pounds per square inch gauge. The allowable leakage in gallons per hour per joint at 150 pounds per square inch average test pressure shall be as follows:

Pipe Diameter (Inches)	Gallons Per Hour	Pipe Diameter (Inches)	Gallons Per Hour
2	0.0132	12	0.0794
3	0.0198	14	0.0926
4	0.0265	16	0.1058
6	0.0397	18	0.1190
8	0.0529	20	0.1321
10	0.0661	24	0.1587

Should any pipe laid disclose leakage greater than that specified above, the defective joints shall be located and repaired until the leakage is within the specified allowance, without additional cost to the City.

Leakage tests on asbestos-cement pipe shall be done only after the pipe has been filled with water for a minimum period of twenty-four (24) hours.

7-05.3.6 Sterilization of Pipe Lines

General. After pressure and leakage tests and before being placed into service, all newly laid water mains shall be thoroughly flushed to remove any foreign matter. The mains shall be sterilized after flushing.

Method of Sterilization. Chlorine shall be used for sterilization. Chlorine may be applied by any of the following methods: (1) liquid chlorine gas-water mixture, (2) direct chlorine gas feed or (3) calcium hypochlorite and water mixture. The chlorinating agent shall be applied at the beginning of the section adjacent to the feeder connection and shall be injected through a corporation cock, hydrant or other connection insuring treatment of the entire line. Water shall be fed slowly into the new line with chlorine applied in amounts to produce a dosage of forty (40) ppm to fifty (50) ppm. Mains previously filled shall be treated to a concentrated dosage at intervals along the line and retained for a period of eight (8) hours or more. A residual of not less than five (5) ppm chlorine shall be produced in all parts of the line. During the chlorination process, all intermediate valves and accessories shall be operated.

After chlorination, the water shall be flushed from the line at its extremities until the replacement water tests are equal chemically and bacteriologically to those of the permanent source of supply.

Application of Chlorine Solution. Chlorine gas-water mixture shall be applied by means of a solution feed chlorinating device. Chlorine gas shall be fed directly from a chlorine cylinder equipped with a suitable device for regulating the rate of flow and the effective diffusion of gas within the pipe. Calcium hypochlorite shall be comparable to commercial products known as H.T.H., Perchloren, and Machochlor. A solution consisting of five (5) percent of hypochlorite to water mixture; first made into a paste and then thinned to a slurry, shall be injected or pumped into a newly laid line under the conditions specified above.

7-05.4 Measurement

Measurement of the water pipe complete with fittings will be made along the slope of the pipe and fittings, and will be made from center to center of fittings and from the center of the fire hydrant tee or wye to the center of the fire hydrant in the case of pipes for fire hydrant leads. Payment will be made at contract unit price on a linear foot basis of a specified size and type of pipe, which price will include full and complete payment for furnishing and installing all pipe, fittings, couplings, jointing material, concrete thrust blocks, sterilizing the lines, testing the lines, and all other labor and material required to install the water lines of the various sizes shown on the plans and make all connections to existing water lines.

The work and materials required to connect each new water main to an existing water main shall be measured as one job, complete; and shall include all fittings, cutting and replacing of existing pipes as required, special couplings thrust blocks and temporary blocking; but shall not include valves. Gate valves shall be paid for as separate items as specified in Section 7-06.

7-05.5 Payment

Payment shall be in accordance with Section 7-01.4

Item	Unit
Furnish and install _____ pipe and fittings (of the various types, sizes and classes in the Bid Schedule)	Linear Feet
Connect New Water Main to Existing Water Line	Each

7-06 FURNISH AND INSTALL GATE VALVES

7-06.1 Materials

7-06.1.1 Gate Valves. Gate valves shall be iron body, fully bronze mounted double disc, parallel seat valves conforming to the latest revision of A.W.W.A. Specification C500 "Gate Valves for Ordinary Water Works Service." All valves shall be non-rising stem type with two (2") inch square operating nuts and shall open counter-clockwise. Valves shall have bell, mechanical joint, or push-on joint ends.

7-06.1.2 Valve Boxes. Valve boxes shall be cast iron of sliding adjustable height type with round or oval bottom hood sections to fit over the top of valve. The top section shall be recessed to receive a closed fitting "eared" lid with the word "Water" cast into it. Internal diameter of the smallest section shall not be less than five (5") inches. Minimum thickness of the metal shall be not less than five-sixteenth (5/16") inch. Castings shall be smooth and the workmanship shall be first class. Valve box sections shall be dipped in coal-tar pitch. Valve boxes shall be of sufficient length for the pipe cover depth shown on the profile drawings. (See Standard Detail for "Typical Valve Box and Lid").

7-06.1.3 Markers. Valve boxes shall be marked with markers consisting of two and one-half (2-1/2") inch O.D. galvanized steel pipe sections, seven (7') feet in length, with three (3') feet embedded. Markers shall be shop painted "Caterpillar" yellow and marked with black numerals showing the appropriate references.

7-06.2 Construction

Valve and valve boxes shall be installed where shown on the plans and shall be set plumb. Valves shall have the interiors cleaned of all foreign matter before installation. If a valve is at the end of a line, it shall be plugged prior to back-filling. Stuffing boxes shall be tightened and the valve shall be inspected in open and closed positions to insure that all parts are in working condition. When the valve box is set in place, the base of the hood section shall rest on compacted fill and should be approximately two (2") inches above the flanged joints of the valve dome. The valve nut shall be about on a line with the upper line of the hood. The entire assembly shall be truly plumb and accurately centered over the valve nut. The top section shall be so set as to permit later vertical adjustment above or below finished grade. Earth fill shall be carefully tamped around each valve box for a radius of four (4') feet, or to the undisturbed trench face if less than four (4') feet. Burlap or rubber will be wrapped around the valve box when directed by the Engineer. Each valve marker shall be set where directed by the Engineer.

7-06.3 Measurement

The quantity to be paid for shall be the actual number of valves of each class and size (including valve boxes and marker posts) furnished, installed and accepted. Auxiliary gate valves for fire hydrants are not to be paid for under this item.

7-06.4 Payment

Payment shall be made in accordance with Section 7-01.4.

Item	Unit
Furnish and install _____ Inch Gate Valve and Valve Box	Each

7-07 SERVICE CONNECTIONS

7-07.1 General. This work consists of making new service connections and reconnecting existing water services to new water mains as shown on the plans, or as directed by the Engineer.

7-07.2 Materials

7-07.2.1 Service Pipe

Pipe for service lines 3/4-inch through 2-inches in size shall be cold-drawn, seamless, annealed copper pipe conforming to ASTM Specification B88, Type K. Service lines larger than 2 inches shall be of ductile iron or cast iron as specified in Section 7-05.

7-07.2.2 Fittings

Corporation stops, curb stops and couplings shall be of bronze, and shall conform to the latest revision of A.W.W.A. Standard C 800. Curb boxes shall be telescopic type, with cast iron base sections and steel pipe top sections. The plug threads shall be iron-to-bronze. Curb boxes shall be coated inside and out with tar-base enamel.

Service line fittings shall be the following:
Mueller Co. models; or approved equal:

Service Line Size	Corporation Stop	Curb Stop	Curb Box
3/4"	H-15000	H-15210	H-10306
1"	H-15000	H-15210	H-10306
1-1/2"	H-15000	H-15214	H-10336
2"	H-15000	H-15214	H-10336

Couplings shall be Mueller Co. H-15405 for copper-to-copper, or H-15425 for copper-to-iron.

7-07.2.3 Service Clamps

Service clamps shall be of the double-flat strap type with neoprene gaskets. Service clamps shall be the following manufacturer models, or approved equal:

Pipe Size	Muellar Co. Clamp	Smith-Blair Clamp
	1½" to 2" Service	3/4" to 1" Service
6"	H-10505	313
8"	H-10509	313
10"	H-10513	313
12"	H-10515	313

Asbestos-Cement Pipe. Double-flat-strap service clamps shall be used for taps through two (2") inch. Special tapping sleeves as manufactured by Mueller Corporation or equal, shall be used when the service connection to the water main is larger than two (2") inch.

Cast Iron Pipe and Ductile Iron Pipe. Maximum size corporation stops, when inserted directly into the water main shall be one (1") inch. Double flat strap service clamps shall be used for one and one-half (1½") taps and two (2") taps. Special tapping sleeves as manufactured by Mueller Corporation or equal, shall be used when service connections to water mains are larger than two-inch (2").

7-07.3 Construction

7-07.3.1 General

Service lines shall be installed in accordance with the standard details. Lines shall be tested for leaks under normal system pressure before any fittings, joints or taps are covered, curb stops shall be examined in both open and closed position for leakage. Unconnected services shall have the unconnected fitting covered with two layers of plastic tape. Each service line shall have a thaw wire, made up and installed in accordance with the standard details. If the contractor connects service lines to a newly constructed water main before the main is tested, no additional leakage allowance will be made, during the tests, for such service lines.

Where existing service lines to buildings are available at the property line, they shall be connected to new service lines when directed by the engineer.

Backfilling of service lines shall be done as specified in Paragraph 7-02.14.

7-07.4 Measurement

Service lines of the various sizes provided in the bid proposal shall be measured as each; and the unit shall include all materials, labor, trenching, backfilling, extra excavation, thaw wires, testing, and the reconnecting of existing service lines, where applicable.

7-07.5 Payment

Payment shall be in accordance with Section 7-01.4.

Item	Unit
Furnish and Install Water Service Line, _____Inch	

7-08 FURNISH AND INSTALL FIRE HYDRANTS

7-08.1 General.

This work shall consist of furnishing and installing fire hydrants at such locations as designated by the Engineer and as shown on the plans in accordance with these Specifications. This item shall include furnishing all material and performing all work specified in this section.

7-08.2 Materials

7-08.2.1 General.

Fire hydrants shall conform to the latest revisions of A.W.W.A. Specification C502, "Fire Hydrants for Ordinary Water Works Service." All hydrants shall be equipped with five (5") inch main valve openings and shall have six (6") inch A.N.S.I. Class 125 Standard flange ends for connecting to the auxiliary gate valve. Fire hydrants shall be Mueller Improved and equipped with an auxiliary gate valve and valve box as shown on the Standard Detail Fire hydrants shall be furnished as indicated on the drawings and bid schedule with the following types of hose connections:

(a) All hydrants shall have TWO two-and-one-half inch ($2\frac{1}{2}$") hose connections and ONE four-and-one-half inch ($4\frac{1}{2}$") pumper connection.

(b) All hose threads shall be National Standard threads. Standard fire hydrants shall be furnished for ten-foot (10') bury. The working parts of all hydrants shall be bronze or non-corrodible metal. Painting and coating shall be in accordance with the cited A.W.W.A. Specifications. Color of paint shall be "Caterpillar Yellow."

(c) The direction of opening for all hydrants shall be counterclockwise.

7-08.2.2 Steam Thawing Pipe. Steam thawing pipe installations shall be of wrought iron pipe with malleable fittings and shall be installed at each hydrant in accordance with the Standard Details.

7-08.3 Construction

7-08.3.1 General.

Except where otherwise approved, the backfill around hydrants shall be thoroughly compacted to the finished grade line immediately after testing. Valves and valve boxes shall be installed where shown and set plumb. Valve boxes shall be centered on the valve. Earth fill shall be carefully tamped around each valve box to a radius of four (4') feet or to the undisturbed trench face if less than four (4') feet. Steam thaw pipes shall be installed as shown in Standard Details. The Contractor shall install hydrants in accordance with the Standard Details. Hydrants not available for use shall be covered with burlap or equal material securely wired or tied down.

7-08.4 Measurement

Each hydrant complete with steam thawing pipe, auxiliary gate valve, valve box, and thrust blocks will be paid for at the unit price as set forth in the proposal. This price will include full compensation for furnishing and installing hydrants of the type and depth of bury as called for in the Specifications and as shown on the plans. Extra excavation required to install fire hydrants, other than as paid for under Section 7-02.17.2, will be paid for as part of the unit price bid for "Furnish and Install Fire Hydrant".

7-08.5 Payment

Payment shall be in accordance with Section 7-01.4.

Item	Pay Unit
Furnish and install Fire Hydrant	Each

7-09 EXTRA DEPTH FOR FIRE HYDRANTS

7-09.1 General

This work shall consist of the adjustment of fire hydrants to be installed under this contract, above or below the standard ten foot (10') bury.

7-09.2 Materials

All adjustment risers shall conform to A.W.W.A. Specification 502. All other materials used shall conform to the appropriate section of these provisions.

7-09.3 Construction

All work in this Section shall conform to Section 7-08. "Furnish and Install Fire Hydrants". The Contractor shall furnish and install all necessary risers, spools or other materials required to do this work. This also includes any necessary excavation and backfill that is not included under other sections of these provisions.

7-09.4 Measurement

Measurement for payment shall be the number of 6" increments the hydrant is set above or below the standard ten foot (10') bury.

7-09.5 Payment

Payment will be in accordance with Section 7-01.4.

Item	Pay Unit
Adjust Fire Hydrant (6" Increment)	Linear Foot

7-10 GUARD POSTS FOR FIRE HYDRANTS

7-10.1 General

This work consists of furnishing and installing guard posts for fire hydrants.

7-10.2 Materials

7-10.2.1 Posts. Posts shall be 3-inch steel pipe, Schedule 40, or other steel section of equal or greater strength. Posts shall be painted red.

7-10-2.2 Concrete. Concrete shall have a minimum compressive strength of 2,000 psi at 28 days.

7-10.3 Construction

Installation of guard posts shall be in accordance with the Standard Details.

7-10.4 Measurement

Guard posts shall be measured by the pair, installed.

7-10.5 Payment

Payment will be in accordance with Section 7-01.4.

Item	Unit
Furnish and install guard posts for fire hydrants.	Pair

7-11 PIT RUN GRAVEL

7-11.1 General

This work shall consist of the furnishing, hauling, spreading, grading and compacting of pit run gravel as shown on the plans or as ordered by the Engineer.

7-11.2 Materials

Material furnished under this item shall be clean, pit-run sand and gravel. The material shall be well graded from the coarsest to fine sizes, and shall be free of sticks, silt or clay lumps, trash, debris or non-mineral matter. The gravel shall have less than 3% of particles by weight finer than 0.02 mm; and shall have no rocks larger than four (4") inches in maximum dimension. Gravel placed on the surface of streets or alleys shall have at least 30% of particles by weight coarser than No. 4 U.S. Standard sieve size.

7-11.3 Placement

7-11.3.1 Trench. Pit run gravel shall be placed in trenches only where shown on the plans or as ordered in writing by the Engineer. Material shall not be dropped directly on the pipe from the ground surface. After the pipe has been covered to a depth of one (1') foot, additional material may be placed as specified in 7-02.

7-11.3.2 Surface. Pit run gravel placed on the surface of streets, alleys and easements shall be spread, graded to the depths and elevations as shown on the plans and/or staked by the Engineer. Gravel placed on the surface of streets shall be compacted to sufficient density to prevent rutting under traffic.

7-11.4 Measurement

7-11.4.1 Trench. Pit run gravel placed in trenches will be measured in place by the average end area. The maximum trench area which will be used for computing quantities will be as shown on the Standard Details unless otherwise ordered by the Engineer.

11-4.2 Surface

Pit run gravel placed on the surface of streets, alleys and easements shall be measured in vehicles at the point of delivery, where the depth of gravel placed does not exceed one foot at any point on the cross-section. Gravel placed where the depth exceeds one foot at any point in the section shall be measured in place by the average end-area method. The Engineer may, at his option, measure all gravel in vehicles.

11-5 PAYMENT

Payment shall be in accordance with Section 7-01.4

Item	Pay Unit
Pit run gravel placed in trench	Cubic Yard
Pit run gravel placed on surface of streets, alleys and easements	Cubic Yard

7-12 EXCAVATION AND DISPOSAL OF UNSUITABLE OR SURPLUS MATERIAL FROM SURFACES OF STREETS, ALLEYS AND EASEMENTS

7-12.1 General

This item consists of the excavating, hauling and disposing of all soil removed from rights-of-way prior to the excavating of trenches for utilities, including driveway approaches and side street approaches, as shown on the plans or as designated and marked or staked by the Engineer.

7-12.2 Construction

At locations where surface grades are to be lowered, the excavation shall be accomplished before any underground utilities are installed. The Engineer shall stake out the work on the site. The Contractor shall excavate and dispose of all material not needed for restoring the road or surface to the cross-section as staked and as shown or described on the plans. The excavation shall include all surplus material from roads, ditches, back-slopes, and driveway and side street approaches.

At locations where materials are encountered which are unsuitable for restoration of the surfaces of roads, streets, alleys and easements, the unsuitable material shall be removed as directed by the Engineer. The Engineer shall have sole authority for determining the location and extent of unsuitable material to be removed.

Excavated material shall be hauled to disposal sites and dumped, spread and graded to drain.

7-12.3 Measurement: Materials excavated and disposed of under this item shall be measured in trucks or other hauling units, by actual volume. In areas where the excavation exceeds one foot (1') in depth, the Engineer may, at his option, compute volumes of materials in place, before excavation, using cross-sections taken before and after the excavating. Computation of volumes shall be by the average end-area method.

7-12.4 Payment: Payment for this item shall be made in accordance with Section 7-01.4.

Item	Unit
Excavate and Dispose of Material from Surface of Rights-of-Way	Cubic Yard

7-13 SPECIAL BACKFILL COMPACTION

7-13.1 General. This item consists of the compaction of backfill in trenches or excavations to a specified minimum density.

7-13.2 Construction. Within the limits shown on the plans or designated by the Engineer, backfill from one (1) foot over the top of the pipe to the surface shall be compacted to not less than ninety-five (95) percent of maximum density, unless otherwise noted or approved by the Engineer. Maximum density shall be determined by the current requirements of AASHO Method T180. The backfill material shall be placed in the trench in horizontal lifts not exceeding one (1) foot in thickness, and compacted. Any trenches improperly filled shall be reopened to the depth required for proper compaction, then refilled and compacted at the Contractor's expense.

7-13.3 Measurement: Special backfill compaction will be measured per linear foot of trench compacted, regardless of the depth or width of the trench. The City reserves the right to eliminate any or all of this item from the bid, in which case the Contractor will not be allowed to claim damages or loss in profit.

7-13.4 Payment. Basis of payment for this item shall be in accordance with Section 7-01.4

Payment will be made under:

Item	Unit
Special Backfill Compaction	Linear Foot

SECTION 8

CONSTRUCTION SPECIFICATIONS

FOR SANITARY SEWER SYSTEMS

8-01 GENERAL

8-01.1 Scope of Work

The Contractor shall furnish all materials, labor and equipment necessary to excavate, install, trench, and backfill for sewer lines and appurtenances where shown on the Plans and where specified herein.

8-01.2 Stakes and Reference Lines

The Engineer will lay out in the field the alignment and grade of work to be done under the Contract. When once so laid out, the Contractor shall be responsible for the preservation of all line stakes, grade stakes and hubs. In the event of their loss or destruction, the Contractor shall pay all costs for their proper replacement. The Engineer shall set reference hubs for each manhole, cleanout or other sewer access structure, and shall establish elevation reference points for each structure. The Contractor shall be responsible for, and pay all costs for the transfer of alignment and grade to the pipe, during installation, by means of transit and level, laser beam, or other means of sufficient accuracy. The ground line profile refers to the elevation of the ground directly above the centerline of pipe and the grade line refers to the elevation of the invert of pipe, except where otherwise noted.

8-01.3 Concrete

All concrete used in the construction of sanitary sewers, with the exception of manhole risers, bases and cones, shall be so proportioned with well graded aggregate so as to give a compressive strength of three thousand (3,000) pounds per square inch at twenty-eight (28) days. Concrete mixing, proportioning and placing shall conform to the requirements of ASTM Standard C 94: Ready-Mixed Concrete.

8-01.4 Measurement and Payment

The contract price of each bid item shall constitute full compensation for furnishing all plant, labor, equipment, appliances and materials, and performing all operations necessary to construct and complete each phase in accordance with the requirements of the specifications and the applicable drawings. Payment for each bid item shall be considered as full compensation, notwithstanding that minor features of work to complete the section may not be mentioned. Deviation in the actual quantities either above or below the estimated quantities shown for each item shall not be made a basis for adjustment in any of the con-

tract unit prices except as otherwise specified in the General Provisions. Work paid for under one item will not be paid for under another item.

8-02 TRENCH EXCAVATION AND BACKFILL

8-02.1 Scope of Work

This work shall consist of all excavation and backfill required for pipe installation, cleanouts, manholes and all other miscellaneous items as specified in this section.

8-02.2 Construction

a. Excavation. All excavation shall be unclassified and the Contractor shall do all excavation of whatever substances encountered, including rock and frozen ground, to the depth shown on the plans or as specified by the Engineer. Where distinct surface layers are encountered, of topsoil, clay, silt, peat or other materials undesirable for inclusion in the backfill, these materials shall be segregated into separate stockpiles during the excavating.

   Lines and grades shall be carried by means of a transit and level, or approved equivalent, using at least three (3) grade stakes established by the Engineer. Whenever there is an indication of a discrepancy in grade, the Engineer shall be consulted and the grade changed or approved before proceeding with work.

   1. Disposal Sites: The City shall provide and designate adequate disposal sites. Only such types of waste materials as are specifically stated on the plans may be placed in the respective disposal sites. The Contractor may, at his own expense, provide other disposal sites. All sites must be approved by the Engineer. All disposal sites shall be located and maintained so as to be neither offensive nor a menace to public health and welfare.

   2. Clearing: The Contractor shall clear all brush, trees, debris, trash, garbage, etc., from right-of-way or easement areas as is necessary to accomplish the sewer construction and to prevent such extraneous materials from being utilized in the backfill. All areas shown on the plans to be cleared shall be cleared to the limits indicated.

   3. Removing and Replacing Fences: At locations where fences are shown on the plans, the Contractor shall remove the fences located in the existing right-of-way or easement areas and replace these fences at locations as staked by the Engineer. Fences shall be replaced at the new locations in such a manner as to produce a fence of equal or better construction quality to that of the fence removed.

4. Removing Existing Structures and Dwelling Units, Usable Oil Barrels, Machinery, Automobiles, and Miscellaneous Personal Property from Rights-of-Way or Easements: At locations where trailers, sheds or dwelling units, oil barrels, machinery, automobiles, and miscellaneous personal property are presently occupying space within rights-of-way or easement lines, as shown on the Plans, the Contractor may exercise the option of removing these structures from the right-of-way to the property owner's lot, or the Contractor may do such bracing and shoring as is necessary to protect these structures and perform the work necessary. In the case of movement of oil barrels, dwelling units, personal property, etc., the Contractor shall exercise care that the property owner is inconvenienced as little as possible. In the cases of interrupting fuel services from oil barrels, service shall be restored to the property owner immeidately after moving the barrels.

5. Removing Existing Asphaltic or Concrete Pavement: Where the Plans indicate the removal of existing asphaltic or concrete pavement for the installation of sewer lines, the pavement shall be removed in a manner that will produce a straight, uniform edge along the section removed. The method of producing the straight edge shall be by cutting the section to be removed with an air chisel, or by other methods approved by the Engineer. The Contractor shall dispose of the removed pavement at a disposal area approved by the Engineer.

6. Removal of Culverts, Mailboxes, Miscellaneous Signs and Markers: All culverts, mailboxes, signs and markers located within the cross-section of the trench or crossing the trench shall be removed or shored up as directed by the Engineer. Any damage to the above items as a result of construction under this contract will be repaired or the item replaced in kind by the Contractor.

7. Subsurface Investigation: Information pertaining to subsurface exploration, borings, test pit locations and other preliminary investigation may appear on the Plans or in the Special Provisions, or be available at selected locations for review by the bidder. While such data will have been collected with reasonable care, there is no expressed or implied guaranty that conditions so indicated are exact or entirely representative of those actually existing. The bidder shall put his own interpretation on results of such investigations and satisfy himself as to the conditions to be encountered.

8. Trench Section: Unless otherwise approved by the Engineer, the maximum width of trench for pipe up to thirty-three (33) inches in diameter shall be O.D. + 18 inches; for pipe over thirty-three (33) inches in diameter, the maximum width shall be O.D. + 24 inches. The width of the trench shall be six (6) inches minimum on each side of a pipe joint.

9. Utilities: All water lines, sewers, gas lines, or other utilities encountered in excavation of the trenches or appurtenances shall be supported and protected from injury throughout the entire construction period and until such time as adequate backfill has been completed.

10. Water Removal: Ground adjacent to the excavations shall be graded to prevent water from running in. The Contractor shall remove by pumping or other means, approved by the Engineer, any water accumulating in the excavation which, in the opinion of the Engineer, is detrimental to the proposed installation of the sewer lines, appurtenances and structures.

11. Bracing and Shoring: The Contractor shall be responsible for the bracing, sheeting, shoring and underpinning of the excavation walls and adjacent structures and shall perform such bracing, shoring, etc., for all subsurface utilities and structures and all surface utilities and structures with the exception of telephone poles, power poles and appurtenances. The bracing, etc., of said poles and appurtenances shall be performed by the separate utility company having jurisdiction. The cost of bracing those poles designated on the drawings to be braced, shall be paid by the City at no cost to the Contractor. The cost of bracing or shoring any poles not designated on the drawings shall be paid by the Contractor.

12. Removal and Disposal of Abandoned Pipe Encountered in Excavation: When pipe, which is abandoned or is to be replaced, is encountered in the excavation for a sewer line or appurtenances, it is to be removed and disposed of at disposal sites approved by the Engineer.

13. Excess Excavation: All unauthorized excavation below the required level shall be backfilled with sand or gravel and thoroughly compacted at the Contractor's expense and as directed by the Engineer.

14. Limit of Open Trenches: Unless otherwise approved by the Engineer, the total length of open trench per trenching machine shall not exceed eight hundred (800) feet.

b. Backfill. At such times as the Engineer may approve, but only after the pipe lines and appurtenances have been properly completed and inspected, the trenches and appurtenant structures shall be backfilled. Backfill from six (6) inches below the pipe to one (1) foot of cover over the top of the pipe shall be of approved selected material grading generally from sand to two (2) inches, and shall contain no large rocks or frozen clods. Any large rocks or frozen clods occurring in the material used for select backfill shall be removed by hand picking, prior to backfilling. Approved selected backfill may be material from the excavation or material selected from the sides of the trenches. Backfill to one (1) foot of cover over the top of the pipe shall be evenly placed and carefully deposited under, around and over the pipe in maximum six (6) inch layers which shall be thoroughly compacted. The remainder of the backfill shall be free of extraneous material such as trees, stumps, trash, large boulders. Backfilling in roadways, streets, alleys, or easements shall be performed in such a manner as to restore the surface as nearly as possible to its original condition. The Contractor shall shape, compact and grade all backfilled areas until settlement of the backfill is complete.

1. Utilization of Excavated Material: Usable material removed from trench excavation shall be kept separate from unsuitable material and shall be used where practical for fill and backfill as directed by the Engineer. Excavated materials not required or not suitable for fill and backfill,

shall be removed from the site as the Engineer may direct and shall be paid for as specified under Sections covering disposal of unsuitable materials.

2. Replacement of Culverts, Mailboxes, Miscellaneous Signs and Markers: All culverts, mailboxes, signs and markers temporarily removed or shored during construction under this contract shall be returned to their original positions. Culverts shall be left free of debris with clear access at each end. Mailboxes, signs, and markers shall be washed or wiped clean of dirt and stains resulting from construction under this contract.

8-02.3 Measurement

Measurement of trench will be per linear foot along the horizontal from center to center of manholes, from center of manholes to center of cleanout wyes, from center of manholes to face of headwall, and from center of manholes to end of outfall pipe, for the various depths as set forth in the Bid Proposal. The depth shall be measured from the invert of the pipe to the ground surface prior to trench excavation. If the ground surface is excavated for other purposes prior to the trenching, the depth of trench shall be measured from the invert of pipe to the ground surface as it exists after the other excavation is complete. It is the intent of this clause to eliminate double payment for excavation common to the separate phases of the contract.

8-02.4 Payment

Payment shall be in accordance with Section 8-01.4.

Payment will be made under:

Item	Pay Unit
Trench Excavation and Backfill (various depths)	Linear Foot

8-03 FURNISH AND INSTALL PIPE

8-03.1 General

a. Pipe: All pipe shall conform to the sizes and types and classes shown on the plans.

b. Wyes: Wyes shall be installed only when called for on the plans. When included, all wyes shall be four (4) inch, or as shown on the plans, and shall lead off at 45° to the sewer main. When a wye is installed and not connected

to the service line before backfilling, it shall be capped and a minimum 2" x 2" wooden rod shall be installed from the bottom of the trench to a point flush with the ground after backfilling.

c. Joints and Jointing: Joints shall be made of such material as will provide a sewer line meeting infiltration and exfiltration tests required under Paragraph 8-03.4. Jointing materials shall be such as will permit placement of sewers without appreciable irregularities in the flow line.

8-03.2 Materials--Pipe and Fittings, Joints

a. Asbestos-Cement Pipe: Asbestos-cement pipe shall conform to the A.S.T.M. Specification for Asbestos-Cement Nonpressure Sewer Pipe, A.S.T.M. Designation, C-428 for Class 2400, Type II, unless otherwise shown on the plans. The asbestos-cement pipe shall be supplied in standard lengths of thirteen (13) feet, except that six (6) inch and eight (8) inch sizes may be furnished in ten (10) foot lengths.

   All wyes, elbows, couplings and similar fittings shall conform to A.S.T.M. Specification for Asbestos-Cement Nonpressure Sewer Pipe, A.S.T.M. Designation C-428, and shall be made of the same material as the pipe and furnished in classes suitable for the class and type of pipe with which they will be used.

   Jointing for asbestos-cement pipe shall conform to the requirements of the A.S.T.M. Specifications for Rubber Rings for Asbestos-Cement Pipe, A.S.T.M. Designation, D-1869.

b. Concrete Pipe: Except where otherwise noted on the plans, plain concrete pipe from six (6) inch through fifteen (15) inch size shall conform to A.S.T.M. Specification C-14. Eighteen (18) inch and larger concrete pipe shall conform to the requirements of A.S.T.M. Specification C-76, Class II for reinforced concrete pipe. Pipe sections shall be a minimum of two and one-half (2 1/2) feet in length.

   Joints for concrete pipe shall be bell and spigot and shall be assembled using rubber gaskets. Joints and gaskets shall conform to A.S.T.M. Specification C-443.

c. Cast Iron Pipe: Cast iron pipe and fittings shall conform to current AWWA Standard C 106, Class 22, with cement mortar lining, unless otherwise specified on the plans.

   All wyes and fittings for cast iron pipe shall conform to AWWA Specification C 110, with mechanical joints.

   Joints for cast iron pipe shall be of the mechanical joint type, with lead-tipped rubber gaskets; or of the push-on joint type, with rubber gaskets furnished by the pipe manufacturer.

d. Ductile Iron Pipe: Ductile iron pipe shall conform to AWWA Specification C151, thickness Class 50, with cement-mortar lining conforming to AWWA Specification C104, unless otherwise specified in the plans or Special Provisions. Fittings used with ductile iron pipe shall be cast iron fittings conforming to AWWA Specification C110 for 250 psi pressure. Fittings shall be all bell unless otherwise shown on the plans. Rubber gaskets for joints shall conform to AWWA Specification C111. Ductile iron pipe shall be used where shown on the plans or Bid Schedule. Ductile iron pipe may be used, at the option of the Contractor, in place of cast iron pipe as specified in the plans or Bid Schedule. Joints shall be mechanical or push-on types.

e. Reinforced Plastic Mortar Sewer Pipe (RPM Pipe): RPM pipe shall be fabricated of silica sand, polyester resin, and glass-fiber reinforcement. The pipe shall be fabricated with push-on joints and shall be furnished with rubber joint gaskets. The following products are specifically acceptable, but are designated only as representative acceptable materials, and other similar products or equivalent material, class and quality may also be acceptable:

1. Techite Pipe, as manufactured by United Technology Center; non-pressure, with standard bells.

2. Flextran Pipe, as manufactured by Johns-Manville, for gravity service, with standard bells.

All pipe furnished shall be straight, round, with smooth interior. Joints shall be such that, when fully joined, the space between spigot end and matching bell seat shall not exceed one-eighth inch (1/8") for pipe laid in a straight line.

8-03.3 Construction

a. Installation. Pipe and accessories shall be handled in such a manner as to insure delivery to the trench in sound, undamaged condition. Pipe shall be carried into position and not dragged. Material found to be defective before or after laying shall be repaired to the satisfaction of the Engineer or replaced with sound material without additional expense to the City.

Cutting of pipe shall be done in a neat workmanlike manner as recommended by the manufacturer and approved by the Engineer.

All sewers shall be laid to true line and grade with bells upgrade and with spigot end fully inserted into the adjacent bell. The sections of pipe shall be so laid that after the sewer is completed, the interior surface thereof conforms accurately to the grade and alignment specified.

Exposed and open ends of the pipe shall be protected with a board or other approved stopper at the end of each day's work and at all other times when necessary to prevent earth or other substances from entering the pipe. Ground water may be drained into the open end of the sewer pipe provided that a screen or burlap is placed over the end of the pipe to keep out extraneous

material and provided further, that the water does not drain into an active sanitary sewer. Any dirt, cement, or other superfluous material must be removed before acceptance of any sewer line.

b. Joints and Jointing.

1. General: Joints shall be made of such materials as will provide a sewer line meeting infiltration, exfiltration and leakage tests required. Jointing materials shall be such as will permit placement of sewers without appreciable irregularities in the flow line.

2. Asbestos-Cement Pipe: Jointing for asbestos-cement pipe shall be as recommended by the manufacturer and approved by the Engineer.

3. Concrete Pipe: Jointing material for concrete pipe shall be either hot-poured bituminous compound, precast bituminous compound or rubber gaskets applied and used as recommended by the manufacturer and approved by the Engineer.

4. Cast Iron and Ductile Iron Pipe: All jointing shall be push-on or mechanical joint. Methods for jointing shall be as recommended by the manufacturer and approved by the Engineer. Non-pressure pipe may be "no-hub" pipe with neoprene couplings with stainless steel drawbands, or "Tyseal" pipe with rubber gasket, push-on joints.

5. Reinforced Plastic Mortar Pipe: Joints shall be push-on type with rubber gaskets, each applied and used in a manner recommended by the manufacturer and approved by the Engineer.

c. Alignment and Grade. The pipe shall be so laid in the trench that after the sewer is completed, the interior surface thereof conforms accurately to the grade and alignment shown on the plans. All adjustments to line and grade shall be done by scraping away or filling with soil under the body of the pipe, not by blocking or wedging up. A maximum of 0.03 feet deviation from design elevation will be allowed, but at no time shall a given length of pipe be level or have a reverse grade. When sufficient pipe is ready for a grade and alignment check, the Contractor shall notify the Engineer who may call for a check by a survey crew. Should any pipe prove not to be within allowable tolerances, it will be regraded and aligned and rechecked. The Contractor will be charged for the survey crew's time and materials for all checks other than the initial check required.

Grades shall be carried by means of survey instruments or other suitable method. When survey instruments (transit and level) are employed, level readings shall be based on initial readings taken from hubs at each end of the sewer section being installed, and one intermediate hub. Grades shall be checked constantly and whenever a discrepancy in grade is detected, all work shall be stopped and the Engineer notified so that the error can be corrected before proceeding with the work. Sewer grade is expressly understood to mean the invert of the pipe, and from this point all calculations will be based.

8-03.4 Leakage Tests

Leakage tests shall be performed by the Contractor on all sewer pipe installed under the contract. When sections of main sewer, exclusive of service branches, in excess of 600 feet in length are included in a single test, the total leakage shall not exceed the allowable leakage for 600 feet of line of the same size. Pipe sections over 600 feet in length having test leakage in excess of this limit may be tested subsequently in shorter sections.

The Contractor shall furnish all tools, equipment, and labor necessary to complete the tests and shall know from his own observations, or preliminary tests, that each line conforms with this specification before requesting the Engineer to observe and record the actual leakage. The Engineer may require the Contractor to repair obvious leaks even though the total length of the test section falls within the maximum allowable leakage for the test used.

When the natural ground watertable is above the crown of the higher end of the test section, the sewer shall be tested by measuring the water infiltration rate. When the natural water table is lower than the crown of the higher end of the test section, the sewer shall be tested by air pressure or water exfiltration, at the option of the Contractor. The Contractor may fill the pipe with water at any time up to 24 hours prior to the time of testing. If the Contractor so elects, he may conduct air tests prior to wetting the inside of the sewer pipe. If the leakage so measured exceeds the permissible leakage, the Contractor may wet the sewer section with water and re-test. If the leakage measured during the re-test is within the permissible limits, the section of sewer shall be accepted as to leakage.

The tests shall be made after the sewer line has been laid, all mortar joints set, and the pipe backfilled. The tests shall be made by temporarily plugging the open ends of all sections being tested, including wyes and service lines. Plugs shall be carefully and securely blocked to prevent them from blowing out under pressure.

a. Infiltration Test: Infiltration water flow shall be measured by use of a calibrated weir inserted in the downstream end of a test section of sewer. The sewer line shall be plugged at the upstream side of the upstream manhole. Infiltration flow readings shall be made at time intervals, until no increase or decrease in flow occurs between two successive readings. Maximum permissible infiltration is shown in Table I. No allowance shall be made for external hydrostatic head.

TABLE I

Pipe Size, I.D.	Gal/Hr/100 Ft.
6"	2.4
8"	3.2
10"	4.0
12"	4.8
14"	5.6
15"	6.0
16"	6.4
18"	7.2
20"	8.0
21"	8.4
24"	9.6

b. Exfiltration Test: All manholes, cleanouts and fittings are to be included in the test. After plugs are installed to isolate the test section, water shall be introduced so that the upper manhole is filled to a depth of four feet (4') above the invert. After 30 minutes, the manhole shall be refilled to the same depth, and the amount of water required for refilling shall be measured. Maximum permissible leakage shall be that tabulated in Table I, except that ten percent (10%) shall be added for each two feet of water head in excess of four feet at the mid-point of the test section.

c. Air Pressure Test: The section of pipe to be tested shall be isolated by completely blocking all outlets in the section under test. Careful attention must be given to the bracing of all plugs, before the line is put under pressure. One of the plugs used at the manhole must be equipped for an air inlet to fill the line from the air compressor. The air compressor which feeds air into the pipe section must be equipped to control the air entry rate and to prevent the pressure from exceeding 5 psig. The air compressor shall be fitted with a blow-off valve set to operate at 5.0 psig to prevent an increase in pressure which would be hazardous to the pipe line.

After the pipe has been wetted, the air shall be allowed to slowly fill the pipe line until a constant pressure of 4.0 psig is maintained. At this point, the compressor shall be controlled so that the internal pressure in the line is maintained between 4.0 and 3.5 psig for at least two minutes to permit the temperature of the entering air to equalize with the temperature of the pipe wall. During the two-minute stabilization period, the Contractor shall check for tightness, with a soap solution, all of the plugs and exposed fittings. If leakage is found at such points, the pressure in the line shall be released, and the plugs tightened to stop the leakage. If it is necessary to bleed off the air to repair a faulty plug, a new two-minute interval must be allowed when the line has been refilled.

When the temperature of the air has reached equilibrium with that of the pipe wall, the air source shall be disconnected. Before disconnecting the air supply, the pressure shall be at 4.0 psig. The gauge is then watched until the air pressure reaches 3.5 psig. When the pressure has reached 3.5, a stop watch shall be started and stopped when the pressure has reached 2.5 psig. The time required, as shown on the watch, for a loss of 1.0 psi at an average pressure of 3.0 psig, shall not be less than the minimum period shown in Table II for the various sizes of pipe:

TABLE II

Pipe Diameter, I.D.	Time Min.	Time Sec.
6"	2	15
8"	3	55
10"	4	40
12"	5	35
14"	6	30
15"	7	00

TABLE II (Cont.)

Pipe Diameter, I.D.	Time Min.	Sec.
16"	7	30
18"	8	25
20"	9	20
21"	9	45
24"	11	15

No section of sewer line tested shall be accepted in which the pressure drop occurs in less time than that shown in the table for the particular pipe size.

8-03.5 Measurement

Measurement of sewer mains will be made along the slope of the pipe and will be from center to center of manholes, from the center of manholes to the end of outfall pipe, and from center of manhole to center of cleanout wye or bend.

8-03.6 Payment

Payment shall be in accordance with Section 8-01.4.

Payment will be made under:

Item	Pay Unit
Furnish and Install _____ Pipe (Include type, size, and class)	Linear Foot

8-04 CONSTRUCT SANITARY SEWER MANHOLE

8-04.1 Scope

This item consists of the construction and installation of sanitary sewer manholes as shown on the plans and in accordance with the standard details.

8-04.2 Materials

a. Precast manhole riser sections, cones, bases and grade rings shall conform to ASTM Specification C-478, and the Standard Details. Joints between sections shall be sealed with rubber gaskets, plastic ("Ram-Nek") gaskets, or cement mortar. Cones shall be eccentric. Connection holes for all sewer lines and stub lines shall be cast into the sections at the appropriate elevations.

b. Manhole steps shall be wrought iron or galvanized steel, as shown on the Standard Details. Steps shall have one application of hot coal tar applied.

c. Manhole rings and covers shall be gray iron castings conforming to ASTM Specification A-48. Covers shall be heavy duty, street traffic type. Covers shall have one perforation only, for lifting.

   1. Rings and covers for Types I and II manholes shall be provided with steel dust covers. Dust covers shall be coated with hot coal tar. Lifting handles shall be provided, as shown on the Standard Details.

   2. Rings and covers for Type III manholes shall be equipped with bolts or other positive locking devices to attach the covers to rings. Ring bases shall have bolt holes for attachment to the manhole cones. Type III manholes shall not have dust covers.

d. Cement for mortar used in the construction of manholes shall conform with ASTM Specification C-150, Type II. Sand shall conform with ASTM Specification C-144, and hydrated lime shall conform with ASTM Specification C-6.

8-04.3 Construction

At manhole locations, the trench shall be widened to provide adequate space for installing the manholes. The bottom of the excavation shall be levelled, using sand and fine gravel. The base and base riser section shall then be set in place, properly aligned, and checked for elevation, plumbness, and uniform bearing. If it is necessary to adjust the section for elevation or vertical alignment, this shall be done by scraping soil away or adding sand, compacting, and resetting the base. When finally set, the base shall bear fully on the soil with no void spaces, high spots or projecting rocks beneath it. The connecting pipe lengths shall be installed after the base is set in place, adjusted to correct grade and line, and joined to the manhole with mortar. Where grade and alignment permit, the pipe may be laid continuously through the manhole, and the upper half of the pipe within the manhole removed by cutting or chipping. Otherwise, the invert shall be formed, in Types I and III manholes, by pouring concrete to the elevation of the crown of the downstream pipe, shaping channel(s) to conform to the shape and inverts of the pipes, and troweling to a smooth, uniform finish. Those areas of the manhole invert not channelled shall be shaped into aprons, sloped a minimum of 6:1 toward the channels.

Riser sections, cones and grade rings shall be set in place and all joints, lifting holes and imperfections tightly mortared. Cover frames shall be set in full beds of mortar, unless otherwise directed by the Engineer.

Mortar used in the construction of manholes shall be composed of one (1) part cement and three (3) parts sand with the addition of 15% of lime by volume. All joints and connections are to be mortared. The joints shall be made so as to produce a smooth, regular watertight surface. Only enough water shall be added to provide plasticity in placing the mortar.

All exposed exterior mortar surfaces shall be given one brushed application of bituminous waterproofing.

Backfill material shall be placed carefully around manholes, to prevent tilting or dislodging during the backfilling. Backfill shall be placed uniformly on all sides and tamped into place. Water shall be applied when the backfill consists of sand and gravel. The surface of the finished backfill shall be compacted with tractors, compactors or other suitable equipment.

8-04.4 Measurement

Manholes will be measured as units, complete in place. Depth of sanitary sewer manholes will be based upon a measurement to the nearest 0.5 foot from the top of the casting to the lowest manhole invert. All depths over the specified standard depth for sanitary sewer manholes will be paid for as specified under Section 8-05, "Additional Depth for Manholes".

8-04.5 Payment

Payment for this item shall be in accordance with Section 8-01.4.

Payment will be made under:

Item	Pay Unit
Construct Sanitary Sewer Manhole (Depth of Standard Manhole) (Type)	Each

8-05 ADDITIONAL DEPTH FOR MANHOLE

8-05.1 Scope

This item consists of the construction of additional depth for manholes over and above the standard depth as specified in the Bid Proposal.

8-05.2 Material

All materials used in the extension of manhole barrels shall conform to the requirements outlined under the sections covering manhole construction.

8-05.3 Construction

Construction of additional depth to manholes shall be in conformance with the sections covering manhole construction and the applicable Standard Detail.

8-05.4 Measurement

Total depth of manholes shall be measured as specified in Section 8-04. Additional depth for manholes will be measured per linear foot, complete in place, to the nearest 0.5 foot.

8-05.5 Payment

Payment for this item shall be in accordance with Section 8-01.4.

Payment will be made under:

Item	Pay Unit
Additional Depth for Manhole	Linear Foot

8-06 CONSTRUCT SEWER CLEANOUT

8-06.1 Scope

This item consists of the construction of sewer cleanouts of 12-inch pipe size or smaller, at locations shown on the plans and in accordance with the standard details.

8-06.2 Material

a. Riser pipe shall be of the same type, class, size and quality as the sewer main on which it is installed.

b. 45-degree bends shall be of types specified in Section 8-03 for the various types of sewer pipe.

c. Cleanout covers and rings shall be gray iron castings conforming to ASTM Specification A-48. Covers shall have one perforation only for lifting. Ring and cover together shall weigh not less than 80 pounds.

d. Concrete shall be as specified in Section 8-01.3.

8-06.3 Construction

Where practicable, the trench for the riser pipe should be excavated only to the depth necessary, and not undercut. If the bed is overexcavated, or if the riser pipe is to be installed on fill or backfill, then the bed shall be compacted to not less than 95% of the maximum density as determined using AASHTO Method T180. Pipe installation and jointing shall be as specified in Section 8-03 for the type of pipe used. After the cleanout trench has been backfilled, the soil base for the cleanout top shall be levelled and compacted to not less than 95% as specified above. The ring and cover shall be installed in a concrete collar as shown on the standard details, with top elevation as shown on the plans or as staked by the Engineer. If called for on the plans, a clamp shall be installed to secure the cover, as shown on the standard details.

8-06.4 Measurement

Cleanouts of 12-inch size or smaller shall be measured as units, complete in place, and shall include all materials and construction including riser pipe, bend, ring and cover, clamp, concrete and all excavation, backfill and compaction required beyond the center of the riser bend.

8-06.5 Payment

Payment for this item shall be in accordance with Section 8-01.4.

Payment will be made under:

Item	Pay Unit
Construct Sewer Cleanout	Each

8-07 CONSTRUCT DROP SEWER CONNECTION

8-07.1 Scope

This item consists of the construction and installation of drop sewer connections to manholes as shown on the plans and in accordance with the applicable standard detail. Drop connections are installed when there is more than a two (2) foot drop from a connection to the lowest invert in a manhole.

8-07.2 Materials

Pipe and fittings for drop connections shall be ductile iron or cast iron as specified in Section 8-03. Drop pipes shall be the same size as the sewer main.

8-07.3 Construction

Over-excavation under drop connections shall be backfilled with sand and fine gravel, compacted to not less than 100% of maximum density as determined using AASHTO Method T180. Pipe and fittings shall be installed as shown on the standard detail, and backfill shall be placed and compacted. Backfill to the base of the sewer main pipe shall be compacted in layers not exceeding one foot in depth, to 100% of maximum density. The remainder of the backfill shall be compacted as required for the adjacent trench.

8-07.4 Measurement

Drop sewer connections will be measured as units, complete in place, including all extra excavation, fittings, drop pipe, and compaction.

8-07.5 Payment

Payment for this item shall be in accordance with Section 8-01.4.

Payment will be made under:

Item	Pay Unit
Construct Drop Sewer Connection	Each

8-08 CONNECT SEWER TO EXISTING MANHOLE

8-08.1 Scope

This item consists of connecting sewer pipe to existing manholes.

8-08.2 Construction

Where a connection is to be made, the pipe invert shall be brought into the manhole at the elevation shown on the plans, unless otherwise approved by the Engineer. A hole shall be carefully made into the manhole that is at least two (2) inches larger than the pipe to be connected. A channeled invert shall be chipped out of the manhole base. This channel shall be plastered with cement mortar to form a smooth invert for sewage flow. The incoming pipe shall be mortared into the wall of the manhole and the connection made watertight by plastering both the inside and outside walls of the manhole. Care shall be taken when cutting through the manhole wall and chipping the invert channel in the base so that neither the walls nor the base is damaged or cracked in any manner. The downstream pipe in the manhole shall be screened to prevent entry of mortar and other debris.

Specifications for mortar are given in the sections covering manholes.

8-08.3 Measurement

Connection to existing manholes will be measured as units, complete in place.

8-08.4 Payment

Payment for this item shall be in accordance with Section 8-01.4.

Item	Pay Unit
Connect Sewer to Existing Manhole	Each

8-09 EXCAVATION AND DISPOSAL OF UNSUITABLE OR SURPLUS MATERIAL FROM SURFACES OF STREETS, ALLEYS AND EASEMENTS

8-09.1 Scope

This item consists of the excavating, hauling and disposing of all soil removed from rights-of-way prior to the excavating of trenches for utilities, including driveway approaches and side street approaches, as shown on the plans or as designated and marked or staked by the Engineer.

8-09.2 Construction

a. At locations where surface grades are to be lowered, the excavation shall be accomplished before any underground utilities are installed. The Engineer shall stake out the work on the site. The Contractor shall excavate and dispose of all material not needed for restoring the road or surface to the cross-section as staked and as shown or described on the plans. The excavation shall include all surplus material from roads, ditches, back-slopes, and driveway and side street approaches.

b. At locations where materials are encountered which are unsuitable for restoration of the surfaces of roads, streets, alleys and easements, the unsuitable material shall be removed as directed by the Engineer. The Engineer shall have sole authority for determining the location and extent of unsuitable material to be removed.

c. Excavated material shall be hauled to disposal sites and dumped, spread and graded to drain.

8-09.3 Measurement

Materials excavated and disposed of under this item shall be measured in trucks or other hauling units, by actual volume. In areas where the excavation exceeds one foot (1') in depth, the Engineer may, at his option, compute volumes of materials in place, before excavation, using cross sections taken before and after the excavating. Computation of volumes shall be by the average end-area method.

8-09.4 Payment

Payment for this item shall be made in accordance with Section 8.01.4.

Item	Pay Unit
Excavate and Dispose of Material From Surface of Rights-of-Way	Cubic Yard

8-10 ENCASE SEWER MAINS WITH CONCRETE

8-10.1 Scope

This item consists of encasing sewer mains with concrete as shown on the plans or directed by the Engineer; or of replacing those sections of sewer main with ductile iron pipe.

8-10.2 Construction

a. Encasement. Where it is necessary to cross over or under a water main with a sewer line and the sewer main is not cast or ductile iron with water-tight connections, or where the Engineer may direct, the sewer main shall be encased in a minimum thickness of four (4") inches of concrete for a distance of ten (10') feet measured perpendicular to the waterline. Welded wire fabric or other type of wire mesh approved by the Engineer shall be placed around the sewer main prior to encasement with concrete to minimize cracking. Construction of concrete encasement will be in accordance with details as shown in the Plans and Standard Details.

b. Replacement. At the option of the Contractor, or if specified on the plans, ductile iron pipe shall be installed in lieu of encasing with concrete. Ductile iron pipe shall be as specified in paragraph 8-03.2. Special couplings, as required, shall be Smith-Blair No. 441 or 433, or approved equal. The pipe shall be installed in alignment and on grade with the adjoining sewer.

8-10.3 Measurement

Encasing sewer mains with concrete or replacing will be measured by the linear foot of sewer main encased or replaced. Excavation in excess of normal trench excavation required to accomplish the encasement or replacement shall be considered incidental.

8-10.4 Payment

Payment shall be in accordance with Section 8-01.4.

Item	Pay Unit
Encase or Replace Sanitary Sewer	Linear Foot

8-11 DISPOSAL OF UNSUITABLE MATERIAL FROM TRENCH

8-11.1 Scope

This work consists of the disposal of unsuitable material encountered in the trench excavation. This material may include roots, large rocks, peat, silt, clay, cesspools, privy pits or any other material, which in the opinion of the Engineer is objectionable for use as fill or backfill.

8-11.2 Construction

a. General. The Contractor shall use care in separating unsuitable material from usable material. Unsuitable material shall be removed to a depth determined by the Engineer. When unsuitable material is to be removed and disposed of, the Engineer will order the same in writing, stating the limitations of this work. Should the trench be, in the opinion of the Engineer, wider than is necessary for the safety of the workmen, a deduction may be made for the excess width.

   No payment will be made for unsuitable material disposed of on the job site and not actually hauled away.

b. Cesspools and Privy Pits. At certain locations, cesspools and privies may be encountered in right-of-way areas and will have to be removed to allow construction of sewers. Procedures for removal are as follows:

   In the case of a privy encountered, the Contractor shall remove the privy from the right-of-way area and set it over onto the private property where the privy belongs.

   In the case of cesspools and privy pits, the liquid sewage and sludge from the cesspool or privy pit shall be pumped into a watertight container and disposed of at the City sanitary landfill, or other location approved by the Engineer. Great care shall be exercised in transporting cesspool and privy pit liquids and sludge so that no spillage occurs during transportation and disposal.

   The Contractor shall then remove the remaining sludge, cesspool or privy pit logs or cribbing, and any saturated gravel remaining in the trench area, and shall dispose of this material at the City sanitary landfill. Disposal of this material will be coordinated with the Engineer, in order that the material disposed of can be covered with fill material at the dump site immediately after it is dumped. Care shall be exercised in transporting this material so that no spillage occurs during transportation and disposal.

8-11.3 Measurement

Measurement for this item will be per cubic yard, measured in trucks. Cesspool material will be measured in bulk volume as removed from the jobsite.

8-11.4 Payment

Payment shall be in accordance with Section 8-01.4.

Payment will be made under:

Item	Pay Unit
Dispose of Unsuitable Material from Within Trench	Cubic Yard

8-12 SEWER STUBOUT

8-12.1 Scope

This item consists of the construction of short entrance segments of sewers in manholes, including channeling, to provide for future sewer main connections to manholes.

8-12.2 Materials

Unless otherwise shown on the plans, all stubouts shall be asbestos-cement pipe conforming to Section 8-03. Other types of pipe, if specified, shall also conform to the specifications and classes listed in Section 8-03. End caps shall be provided for all stubouts.

8-12.3 Construction

The installation of stubouts shall be as described in Section 8-03, Furnish and Install Pipe. Jointing of pipe to manhole and finishing of manhole inverts shall be as specified in Section 8-04. The outer ends of stubouts shall be closed with end caps, securely blocked to withstand sewer test pressures. Backfilling shall be done as specified in Section 8-02.

8-12.4 Measurement

Sewer stubouts shall be measured as units, regardless of size. The unit shall include the furnishing and installing of pipe and end cap, all excavation in excess of that required for the manhole, blocking, backfilling and testing. Length of stubout as shown on the plans shall be measured from outside wall of manhole to end of pipe.

8-12.5 Payment

Payment for this item shall be in accordance with Section 8-01.4.

Payment will be made under:

Item	Pay Unit
Construct Sewer Stubout (Size x Length)	Each

8-13 SPECIAL BACKFILL COMPACTION

8-13.1 Scope

This item consists of the compaction of backfill in trenches or excavations to a specified minimum density.

8-13.2 Construction

Within the limits shown on the plans or designated by the Engineer, backfill from one (1) foot over the top of the pipe to the surface shall be compacted to not less than ninety-five (95) percent of maximum density, unless otherwise noted or approved by the Engineer. Maximum density shall be determined by the current requirements of AASHTO Method T180. The backfill material shall be placed in the trench in horizontal lifts not exceeding one (1) foot in thickness, and compacted. Any trenches improperly filled shall be reopened to the depth required for proper compaction, then refilled and compacted at the Contractor's expense.

8-13.3 Measurement

Special backfill compaction will be measured per linear foot of trench compacted, regardless of the depth or width of the trench. The City reserves the right to eliminate any or all of this item from the bid, in which case the Contractor will not be allowed to claim damages or loss in profit.

8-13.4 Payment

Payment for this item shall be in accordance with Section 8-01.4.

Payment will be made under:

Item	Pay Unit
Special Backfill Compaction	Linear Foot

8-14 PIT RUN GRAVEL

8-14.1 Scope

This work shall consist of the furnishing, hauling, spreading, grading and compacting of pit run gravel as shown on the plans or as ordered by the Engineer.

8-14.2 Materials

Material furnished under this item shall be clean, pit-run sand and gravel. The material shall be well graded from the coursest to fine sizes, and shall be free of sticks, silt or clay lumps, trash, debris or non-mineral matter. The gravel shall have less than three (3) percent of particles by weight finer than 0.04 mm; and shall have no rocks larger than four (4) inches in maximum dimension. Gravel placed on the surface of streets or alleys shall have at least twenty-five (25) percent of particles by weight coarser than No. 4 U. S. standard sieve size.

8-14.3 Construction

a. Trench. Pit run gravel shall be placed in trenches only where shown on the plans or as ordered in writing by the Engineer. Material shall not be dropped directly on the pipe from the ground surface. After the pipe has been covered to a depth of one (1) foot, additional material may be placed as specified in 8-02.

b. Surface. Pit run gravel placed on the surface of streets, alleys and easements shall be spread, graded to the depths and elevations as shown on the plans and/or staked by the Engineer. Gravel placed on the surface of streets shall be compacted to sufficient density to prevent rutting under traffic.

8-14.4 Measurement

a. Trench. Pit run gravel placed in trenches will be measured in place by the average end area. The maximum trench area which will be used for computing quantities will be as shown on the standard details, unless otherwise ordered by the Engineer.

b. Surface. Pit run travel placed on the surface of streets, alleys and easements shall be measured in vehicles at the point of delivery, where the depth of gravel placed does not exceed one foot at any point on the cross-section. Gravel placed where the depth exceeds one foot at any point in the section shall be measured in place by the average end-area method. The Engineer may, at his option, measure all gravel in vehicles.

8-14.5 Payment

Payment shall be in accordance with Section 8-01.4.

Item	Pay Unit
Pit Run Gravel Placed in Trench	Cubic Yard
Pit Run Gravel Placed on Surface of Streets, Alleys and Easements	Cubic Yard

8-15 SEWER SERVICE CONNECTION AND LINE

8-15.1 Scope

This item consists of the construction of sanitary sewer service lines between the sewer main and property line, in accordance with the Standard Details and plans.

8-15.2 Materials

a. Cast iron pipe shall conform to ASTM Specification A74, service weight. The pipe shall be hubless ("No-Hub"), using neoprene couplings with stainless steel drawband joints; or push-on type, with neoprene gaskets ("Tyseal").

b. Asbestos-cement pipe shall conform to ASTM Specification C644, Class 1500. Joints shall be made using couplings and rubber gaskets provided by the pipe manufacturer, or using neoprene couplings with stainless steel drawbands.

c. Wye-branches shall be of the same type, class and quality as the sewer main into which they are installed. Wyes shall branch at 45° to the centerline of the sewer main.

d. Cast iron 45° wye branches shall conform to the requirements of AWWA Specification C-110, with mechanical joints. Where approved by the Engineer, service lines may be connected to the sewer main through cast iron tees in lieu of 45° wyes.

e. Cut-in fittings shall be of types manufactured for the type and size of pipe comprising the sewer main. Cut-in fittings shall be furnished with bolts for securely attaching to the sewer main, and shall have gaskets and/or waterproof cement to form a watertight joint between the sewer main pipe and the cut-in fitting.

f. Cleanout fittings for service lines shall be cast iron, conforming to ASTM Specification A74. Cleanout risers shall be of cast iron pipe, of the same size as the service line. Joints shall be hubless ("No-Hub"), using neoprene couplings with stainless steel drawbands; or push-on type, with neoprene gaskets ("Tyseal").

8-15.3 Construction

a. Excavation. Trench excavation for sewer service lines shall be unclassified and the Contractor shall excavate whatever materials encountered to the depth required for the construction. The Contractor shall excavate sufficient space to expose the sewer main for a minimum length of four feet, and to the depth of the bottom of the pipe. Any excess excavation below the bottom of the service line shall be backfilled by the Contractor with clean sand and fine gravel, and mechanically compacted. All backfill and compaction of excess excavation shall be at the Contractor's expense.

   The Contractor shall be responsible for, and bear all costs incurred, in the event that a sewer main is damaged during construction of a service

line. The Contractor shall promptly repair the damage by replacing all damaged lengths of pipe, using pipe of the same type, class and dimensions as the sewer main.

b. Pipe Installation. Branch wyes and cut-in branches shall be installed at an angle of 45° up from the horizontal, unless otherwise directed by the Engineer. One or more 45° or 22½° bends as needed shall be installed to provide a grade and alignment transition as shown on the Standard Details. The service line between the transition and the eventual point of connection to the building shall be laid on a straight line and grade. Unless otherwise shown on the plans or directed by the Engineer, the sewer service line shall be laid on a grade of 2% (one quarter-inch vertical in one foot horizontal). Any unused sewer service line shall be capped at the property line and marked as shown on the Standard Details.

c. Cleanouts. At any bends, or at intervals not exceeding 90 feet, cleanouts shall be constructed in sewer service lines as shown on the Standard Details.

d. Backfilling. Backfill to a depth of one foot over the top of the pipe shall consist of selected soil from excavation or from the sides of the trench, spread carefully and tamped in place around the pipe. Stones, clods or debris larger than 2" shall not be placed within one foot of the pipe. The remainder of the backfill shall be placed in layers not exceeding one foot in thickness, and each layer shall be compacted, using water when it aids in the compacting. The backfill shall be compacted to not less than 95% of the maximum density as determined using AASHTO Method T180. The surface of the ground, upon completion of the backfilling, shall be graded to conform to its grade and elevation prior to the construction of the service line.

8-15.4 Measurement

a. Sewer Service Connections shall be measured as units. The work included shall include all excavation, backfilling materials and labor for the installing of branch wye or cut-in fitting for the connecting of a service line, including compacting.

b. Sewer Service Lines shall be measured by linear feet, measured along the centerline of the pipe from the point of connection to wye, tee or cut-in fitting to the point of connection to the building service; or, in the case of unused service lines, to the end cap at the termination of the line. Payment for this item shall include all trench excavation to whatever depth, furnishing and installing pipe, backfilling, compacting, and restoring of the surface, shoring or bracing of cuts and utilities, end cap or connection to existing building service, and marker. Removal of unsuitable material and replacement with sand or gravel will be paid for separately if required, as specified in other Sections.

c. Sewer Service Cleanouts shall be measured as units, complete in place.

8-15.5 Payment

Payment for these items shall be made in accordance with Section 8-01.4.

Payment will be made under:

Item	Pay Unit
Sewer Service Connection (Size)	Each
Sewer Service Line (Size)	Linear Foot
Sewer Service Cleanout (Size)	Each

SECTION 9

CONSTRUCTION SPECIFICATIONS FOR PRESSURE SEWER SYSTEMS

9-01 GENERAL

a. Scope of Work. The Contractor shall furnish all material, labor and equipment necessary to excavate, install and backfill for pressure sewer lines and appurtenances, to make connections to existing manholes and construct manholes where indicated on the plans, and to test, and flush the lines.

b. Stakes. The Engineer will lay out in the field the alignment and grade of work to be done under the Contract. When once so laid out, the Contractor shall be responsible for the preservation of all line stakes, grade stakes and hubs. In the event of their loss or destruction, the Contractor shall pay all costs for their proper replacement. The Engineer shall set reference hubs for each manhole, cleanout or other sewer access structure, and shall establish elevation reference points for each structure. The Contractor shall be responsible for, and pay all costs for the transfer of alignment and grade to the pipe, during installation, by means of transit and level, laser beam, or other means of sufficient accuracy. The ground line profile refers to the elevation of the ground directly above the centerline of pipe and the grade line refers to the elevation of the invert of pipe, except where otherwise noted.

c. Excavation. All excavation shall be unclassified and the Contractor shall do all excavation of whatever substances encountered, including rock and frozen ground, to the depth shown on the plans.

d. Measurement and Payment. The contract price for each bid item shall constitute full compensation for furnishing all plant, labor, equipment, appliances and materials, and performing all operations necessary to construct and complete the section in accordance with the requirements of the specifications and the applicable drawings. Payment for each bid item shall be considered as full compensation, notwithstanding that minor features of work to complete the section may not be mentioned. Deviation in the actual quantities either above or below the estimated quantities shown for each item shall not be made a basis for adjustment in any of the contract unit prices except as otherwise specified in the General Provisions. Work paid for under one item will not be paid for under another item.

9-02 TRENCH EXCAVATION AND BACKFILL

a. General. This work shall consist of all excavation and backfill required for pipe line installation and all other related work as specified in this section.

b. Clearing. The Contractor shall clear all brush, trees, debris, trash, garbage, etc. from right-of-way or easement areas as is necessary to accomplish the sewer line construction and to prevent such extraneous materials from being utilized in the backfill. Debris from clearing shall be disposed of by the Contractor, in accordance with local and state regulations.

c. Removal and Replacement of Culverts. All culverts located within the cross-section of the trench or crossing the trench shall be removed or shored up as directed by the Engineer. Culverts temporarily removed will be returned to their original position. Any damage to culverts as a result of construction under this contract will be repaired or the culverts replaced in kind by the Contractor. The culverts affected as described above will be left free of dirt and debris as directed by the Engineer.

d. Utilization of Excavated Material. Unsuitable material removed from the excavation shall be cast aside and separated from usable material during excavation. Usable material removed from excavation shall be kept separate from unsuitable material and shall be used where practical for fill and backfill as directed by the Engineer. Unsuitable material shall then be placed in the trench over such depths of suitable fill and backfill as the Engineer shall direct.

e. Trench Section. Trench depth shall be as shown on the plans and as staked in the field. Unless otherwise approved by the Engineer, the maximum trench bottom width shall be 36". Width of trench shall be six (6") inches minimum each side of the pipe joint.

f. Excavation for Joint Holes. Excavation for joint holes shall be in accordance with the pipe manufacturer's recommendations or as directed by the Engineer.

g. Unauthorized Excess Excavation. All excavation below the required grade shall be backfilled with sand or gravel and thoroughly compacted as directed by the Engineer. All unauthorized excess excavation and backfill shall be at the expense of the Contractor. Approval must be obtained from the Engineer before excavating below the proposed grade of pipe.

h. Water Removal. Ground adjacent to the excavations shall be graded to prevent water from running into the trench. The Contractor shall remove, by pumping or other means approved by the Engineer, any water accumulated in the excavation which in the opinion of the Engineer is detrimental to the proposed installation of the sewer lines, appurtenances and structures.

i. Bracing and Shoring. The Contractor shall, at his own expense, do all bracing, sheathing, shoring and underpinning as may be necessary to perform and protect all excavations as required for safety to workmen, to work being performed, to exposed or unexposed existing installations or nearby structures, pipes,

and pavements, or to conform to governing laws and/or ordinances. The Engineer may direct the Contractor to brace, sheath and shore trenches and other excavations where, in his opinion, proper precautions are not being taken.

j. Backfilling of Trench. At such times as the Engineer may direct, but only after the pipe lines and appurtenances have been properly completed and inspected, the trenches and appurtenant structures shall be backfilled. Backfill to one (1') foot of cover over the top of the pipe shall be of approved selected material grading generally from sand to two (2") inches containing no large frozen clods. Backfill to one (1') foot of cover over the top of the pipe shall be evenly placed and carefully deposited under, around and over the pipe in maximum six (6") inch layers which shall be thoroughly compacted. Driveways, road crossings and other areas where traffic crosses the trench shall be backfilled completely within 72 hours after the trench is excavated unless otherwise approved.

k. Backfilling in Roadways, Streets and Alleys. Backfilling in roadways, streets, alleys or easements shall be performed in such a manner as to restore the surface as nearly as possible to its original surface elevation and condition, or to grade and elevation as staked by the Engineer.

l. Measurement. Trench excavation and backfill will be measured by the linear foot (horizontal along the pipe centerline) for the various depths as set forth in the bid proposal. Payment depth will be from the ground surface immediately prior to trench excavation to the bottom of the trench. If excavation is to be done in streets or alleys for changing surface grades or removal of unsuitable materials from the surfaces, the depth of trench shall be from the bottom of the trench to the ground surface as it exists after all surface excavation has been completed. It is the intent of this clause to eliminate double payment for excavation common to the separate phases of the Contract.

m. Payment. Payment shall be in accordance with Section 9-01d.

Item	Pay Unit
Excavate and Backfill Trench, 0 Feet to _____ Feet Depth	linear foot

7-03 FURNISH AND INSTALL PIPE

a. General. This work shall consist of furnishing and installing sewer pressure pipe and fittings of the types, classes and sizes required on the plans. The Contractor shall install them in accordance with these specifications and in conformity with the lines and grades given on the plans, unless otherwise directed by the Engineer.

b. Material

Ductile Iron Pipe. Ductile iron pipe shall conform to AWWA Specification C151, thickness Class 50, with cement-mortar lining conforming to AWWA Specification C 104. Fittings for use with ductile iron pipe shall be ductile-iron conforming to AWWA Specification C 110 for 250 psi pressure, with cement-mortar lining. Fittings shall be all bell unless otherwise shown on the plans. Rubber gaskets for joints shall conform to AWWA Specification C 111.

Special Couplings. Couplings for joining different types of pipe, cutting in, and closure joints shall be Smith-Blair No. 433 or approved equal.

c. Construction. Pipe and accessories shall be handled in such manner as to insure delivery to the trench in sound, undamaged condition. Particular care shall be taken not to injure the pipe coating. If the coating or lining of any type of pipe or fitting is damaged, the repair shall be made by the Contractor at his expense and in a satisfactory manner. Pipe shall be carried into position and not dragged. The interior of the pipe and accessories shall be thoroughly cleaned of foreign matter before being lowered into the trench and shall be kept clean during laying operations by plugging or other approved methods. Before installation, the pipe shall be inspected for defects, and where required by the Engineer, shall be tapped with a light hammer to detect cracks. Material found to be defective before or after laying shall be replaced with sound material without additional expense to the City. Rubber gaskets that are not to be installed immediately shall be stored in a cool, dark place and out of the direct rays of the sun.

Cutting of pipe shall be done in a neat and workmanlike manner without damage to the pipe. Unless otherwise authorized by the Engineer or recommended by the manufacturer, cutting shall be done with an approved type saw. Cut ends of pipe shall be bevelled as recommended by the manufacturer.

Maximum allowable deflections from a straight line or grade, as required by vertical curves, horizontal curves or offsets, shall be as recommended by the manufacturer. If the alignment requires deflections in excess of the above limitations, special bends or a sufficient number of shorter lengths of pipe shall be furnished to provide angular deflections within the limits allowable.

Alignment and Grade. The pipe shall be so laid in the trench that after the line is completed, the interior surface thereof conforms to the grades and alignment shown on the plans or as given by the Engineer. A maximum three-tenths (3/10) foot deviation from design elevation will be allowed, but at no time shall a given length of pipe have a reverse grade from that shown on the plans.

All adjustments to line and grade shall be done by scraping away or filling the earth under the body of the pipe and not by blocking or wedging up.

Placing and Laying. Not more than three hundred sixty (360') feet of trench will be kept open ahead of the pipe being laid.

Concrete thrust blocks of the type shown on the Standard Details for water lines shall be installed where the pipe line changes alignment, utilizing a tee, cross, bend or similar fitting. Concrete shall test two thousand (2,000#) pounds per square inch compressive strength after twenty-eight (28) days.

Pipe and accessories shall be carefully lowered into the trench by means of derrick, ropes, belt slings or other suitable equipment. Under no circumstances shall any of the sewer main materials be dropped or dumped into the trench. Care shall be taken to avoid abrasion of the pipe coating. Poles used as levers or skids shall be of wood and shall have broad flat faces to prevent damage to the pipe or coating. Except where necessary, in making connections with other lines or as authorized by the Engineer, pipe shall be laid with the bells or recesses facing in the direction of laying. The full length of each section of pipe shall rest solidly upon the pipe bed with recesses excavated to accommodate the joints. Pipe that has the grade or joint disturbed after laying shall be taken up and relaid. Pipe shall not be laid in water or when trench conditions are unsuitable for the work. Water shall be kept out of the trench until the jointing is completed. When work is not in progress, open ends of pipe, fittings and valves shall be securely closed so that no trench water, earth or other substance will enter the pipes or fittings. Where any part of the coating or lining is damaged, the repair shall be made by the Contractor at his expense and in a satisfactory manner.

Jointing. Ductile Iron Pipe. All jointing shall be in conformance with the latest revisions of AWWA Specification C 600, Sec. 9.

Ductile Iron Fittings. All pipe to fitting joints shall be made with all bell mechanical joint fittings unless otherwise indicated on the plans or called for in the Specifications. Push-on joints shall have two bronze wedges inserted at each joint. Mechanical joints shall be made using lead-tipped rubber gaskets conforming to AWWA Specification C 111.

Flange Connections. Wherever flange connections are shown on the plans, called for in the Specifications or required in the work, the flanges and fittings shall conform to American National Standards Institute, Standard B 16.1 for 125 psi pressure. Gaskets eight (8") inches outside diameter and smaller shall be one-sixteenth (1/16) inch thick. Those over eight (8) inches in diameter shall be three thirty-seconds (3/32) inches thick. Bolts shall have rough square heads and hexangonal nuts made to American Standard rough dimensions and shall be chamfered and trimmed. Nuts and bolts shall be cadmium-plated.

d. Hydrostatic Tests. After laying, all pressure sewers shall be subjected to both pressure and leakage tests. Equipment for testing and all costs for labor, material and supplies shall be furnished by the Contractor at his own expense and no extra payment will be made therefor. The Engineer shall have the right to test and approve all gauges used. Where any section is provided with concrete thrust blocks for fittings, the hydrostatic pressure test shall not be made until at least five (5) days after installation of the thrust blocks unless otherwise approved. The Contractor shall suitably blank off or plug the outlet end of the pipe before making the field tests.

Pressure Test. After the pipe is laid, the joints completed, and the trench partially backfilled leaving the joints exposed for examination, the newly-laid piping or any valved section of piping shall be subjected for one hour to a hydrostatic pressure test of 100 pounds per square inch. After stopping pumping, the pressure shall not drop abruptly. Exposed pipe, joints, fittings and valves shall be carefully examined during the open-trench test. Leaking rubber-gasketed joints shall be remade using new gaskets if necessary. Cracked or defective pipe, mechanical joints or fittings discovered in consequence of this pressure test shall be removed and replaced with sound material. The test shall then be repeated until the results are satisfactory.

Leakage Test. A leakage test shall be conducted after the pressure test has been satisfactorily completed. The duration of each leakage test shall be at least two hours and during the test the main shall be subjected to a pressure of 100 pounds per square inch. Leakage for any newly laid pipe or any valved section thereof is defined as the quantity of water that is necessary to maintain the specified leakage test pressure after the pipe has been filled with water and the air is expelled. No piping installation will be accepted until the leakage is less than the number of gallons per hour as determined by the formula: $L = 0.00054\ ND\ \sqrt{P}$, in which L equals the allowable leakage in gallons per hour; N is the number of joints in the length of pipeline tested; D is the nominal diameter of the pipe in inches; and P is the average test pressure during the leakage test in pounds per square inch guage. The allowable leakage in gallons per hour per joint at 100 pounds per square inch average test pressure shall be as follows:

Pipe Diameter (Inches)	Gallons Per Hour
6	0.0325

Should any pipe laid disclose leakage greater than that specified above, the defective joints shall be located and repaired until the leakage is within the specified allowance, without additional cost to the City.

e. Measurement. Measurement of the sewer pipe complete with fittings will be made along the slope of the pipe and fittings, and will be made from center to center of fittings. Payment will be made at contract unit price on a linear foot basis of a specified size and type of pipe, which price will include full and complete payment for furnishing and installing all pipe, fittings, couplings, jointing material, concrete thrust blocks, cleanouts, testing the lines, and all other labor and material required to install the pressure sewer lines of the various sizes shown on the plans and make all connections required.

f. Payment. Payment shall be in accordance with Section 9-01d.

Item	Pay Unit
Furnish and Install _____ pipe and fittings (of the various types, sizes and classes in the Bid Schedule)	linear feet

9-04 CONSTRUCT PRESSURE SEWER MANHOLE

a. Scope. This item consists of the construction and installation of pressure sewer manholes as shown on the plans.

b. Materials. Precast manhole riser sections, cones, bases and grade rings shall conform to ASTM Specification C-478, and the Details. Joints between sections shall be sealed with rubber gaskets, plastic ("Ram-Nek") gaskets, or cement mortar. Cones shall be eccentric. Holes for sewer lines shall be cast into the sections at the appropriate elevations.

Manhole steps shall be wrought iron or galvanized steel, as shown on the Standard Details. Steps shall have one application of hot coal tar applied.

Manhole rings and covers shall be gray iron castings conforming to ASTM Specification A-48. Covers shall be heavy duty, street traffic type. Covers shall have one perforation only, for lifting.

Cement for mortar used in the construction of manholes shall conform with ASTM Specification C-150, Type II. Sand shall conform with ASTM Specification C-144, and hydrated lime shall conform with ASTM Specification C-6.

c. Construction. At manhole locations, the trench shall be widened to provide adequate space for installing the manholes. The bottom of the excavation shall be levelled, using sand and fine gravel. The base and base riser section shall then be set in place, properly aligned, and checked for elevation, plumbness, and uniform bearing. If it is necessary to adjust the section for elevation or vertical alignment, this shall be done by scraping soil away or adding sand, compacting, and resetting the base. When finally set, the base shall bear fully on the soil with no void spaces, high spots or projecting rocks beneath it. The connecting pipe lengths shall be installed after the base is set in place. The annular spaces between the pipes and manhole walls shall be packed with burlap or asphalt-impregnated felt, to prevent intrusion of soil into the manholes. Manhole bottoms shall not be channelled.

Riser sections, cones and grade rings shall be set in place and all joints, lifting holes and imperfections tightly mortared. Cover frames shall be set in full beds of mortar, unless otherwise directed by the Engineer.

Mortar used in the construction of manholes shall be composed of one (1) part cement and three (3) parts sand with the addition of 15% of lime by volume. All joints and connections are to be mortared. The joints shall be made so as to produce a smooth, regular watertight surface. Only enough water shall be added to provide plasticity in placing the mortar.

All exposed exterior mortar surfaces shall be given one brushed application of bituminous waterproofing.

Backfill material shall be placed carefully around manholes, to prevent tilting or dislodging during the backfilling. Backfill shall be placed uniformly on all sides and tamped into place. Water shall be applied when the backfill consists of sand and gravel. The surface of the finished backfill shall be compacted with tractors, compactors or other suitable equipment.

d. Measurement. Manholes will be measured as units, complete in place.

e. Payment. Payment for this item shall be in accordance with Section 9-01d.

Payment will be made under:

Item	Pay Unit
Construct Pressure Sewer Manhole	Each

SECTION 11

CONSTRUCTION SPECIFICATIONS

SEWAGE PUMPING STATION

11-01 SCOPE OF WORK

The Contractor shall furnish all material, labor and equipment necessary to construct an underground sewage pumping station, complete with electrical controls, where indicated on the plans and as specified herein.

11-02 MATERIALS

a. General. The lift station shall consist of the following and shall be assembled, piped, and wired for operation:

Reinforced concrete pump chamber with access cover
Sewage pumps and motors with support bases and discharge connections
Control panel and enclosure
Ladder
Electric meter base, weather socket and fused disconnect
Plug and receptacle for portable generator
Power transfer switch
Plug-receptacle connectors for pump power cables
Alarm transmittor
Intermediate guide rail supports
Liquid level sensors
Pinch valve and pressurizing pump, reservoir
Vent pipe and blower
Discharge piping as shown on the plans
Miscellaneous items as shown or specified.

b. Pumps. The pumps shall be the submersible type capable of handling raw, unscreened domestic sewage. The pumps shall be of the automatic coupling type, connecting to the discharge piping when lowered into place through automatic aligning and seating guides which permit the removal and replacement of pumps without personnel entering the pump chamber. The pumps shall be equipped with combined discharge brackets and pump supports, and shall have positive guides upon which the pumps may be raised for inspection and lowered into operating position. Each pump shall be equipped with a galvanized chain extending to and connected to the access cover frame, for raising and lowering the pump. Pump casing and impeller shall be of grey iron construction, with exposed bolts and nuts of stainless steel. The pump shall be of non-clog design capable of passing solids, fibrous material, sludge, and congealed grease. Pump seals shall be of the mechanical type, not requiring maintenance or adjustment. The pump shall be fitted with a sliding bracket to ride on the guide bars.

Each pump shall be furnished with 35 feet of factory-installed, flexible, unspliced power cable terminating in a 60 amp weatherproof plug with mating receptacle; Crouse-Hinds "Arktite" receptacle No. AREA 6374 or AREA 6475 with Plug No. APJ 6375 or APJ 6475 respectively, as required for 3-wire or 4-wire pump cable; or approved equal. The pumps shall be designed and balanced for all hydraulic loads throughout the operating range of the pumps. Pump motors shall be designed for compatibility with the pumps, and shall operate on 3-phase, 220 volt, 60 cycle electrical current. Maximum motor speed shall be 1800 rpm. Motors shall be designed to operate in an unsubmerged condition without overheating. Each pump shall be capable of pumping not less than 300 U. S. gallons per minute against a total dynamic head of 90 feet, and not less than 200 gallons per minute against a total dynamic head of 95 feet.

Pumps shall be:

1. HydroMatic Model S4L
2. Flygt Model 6" CP 3152
3. Peabody-Barnes Model 6SEH2002

or approved equal.

c. Pump Guide Bars. Pump guide bars shall be of galvanized steel pipe, of proper length for each installation to extend from the pump support and discharge bracket to upper guide holders attached to the frame of the access door. Guide bars shall have no couplings or obstructions to interfere with the sliding brackets. The bars shall be of the size specified by the pump manufacturer.

d. Access Door. Each pumping station shall be provided with an access door and frame as shown on the plans. The door shall be hinged to the frame, and shall be provided with lock and keys. The door and frame shall be fabricated of aluminum or steel, designed for non-traffic service. The door shall be provided with a spring counterbalance for easy lifting, and shall be provided with a safety locking handle to lock the door in open position. The door shall be fabricated of 1/4 inch checkered plate. The frame shall be provided with: anchor bars for attachment or embedment in the concrete pump chamber cover; upper guide holders; chain holder; electrical power cable holder; and clamps for suspending four (4) liquid level controls. All exposed steel parts shall be either plated, galvanized or shall have one shop coat of red oxide paint and one finish coat of exterior enamel.

e. Pump Control Panel. The pump control panel shall be furnished by the pump manufacturer, and shall be designed for alternating, duplex operation of the two pumps. The panel shall be housed in a NEMA III enclosure, dead front, locking, with brackets for post-mounting. The enclosure shall be factory-finished with baked-on enamel. The panel shall operate from a 3-phase, 4-wire, 120/220 VAC power source. The panel shall contain:

1) 2 across-the-line magnetic motor starters with thermal overload protection

2) 2 motor circuit breakers

3) Pump circuit alternator relay

4) Control circuit with circuit breaker and transformer (if applicable)

5) Control relays

6) 3 alarm relays

7) H-O-A switch for each pump

8) Running time recorder for each pump

9) Time-delay relay for each pump circuit, with minimum range of 25 to 150 seconds, adjustable.

10) 20 amp, 120 VAC duplex receptacle on fused circuit

11) Screw-type terminal strips for connecting of all circuits to pumps, liquid level sensors and alarm transmitter.

The panel shall be designed to operate the pumps, controls and alarm system in accordance with the following functions:

1) Start one pump (No. 1 or No. 2 on alternating cycles) upon closing of contacts of liquid level sensor No. 2 (LL-2). When in "winter" mode, start valve control pump.

2) Start second pump upon closing of contacts of liquid level sensor No. 3 (LL-3).

3) Stop all pumps and operate alternator when lequid level sensor (LL-1) indicates the desired low liquid level in the lift station.

4) The activation of the high liquid level sensor No. 4 (LL-4) will signal the alarm transmitter to transmit a "high water level alarm". (Provide terminals for connection of LL-4 to alarm transmitter.

5) Provide sensing relays in the pump alternator control panel to sense power outage to each of: (1) pump number 1, (2) pump number 2, and (3) controls. Relay contacts to be normally open and to be closed at "power out". Connect contacts to terminal block for field connection to alarm transmitter. Each "power out" signal to remain "locked on" until the malfunction is corrected and a reset button in the panel is pushed.

6) In the pump alternator control panel, provide an adjustable (25-150 second min. range) timer relay to delay restarting each pump after it has been running and has been shut down, for any reason. Set timer for one minute.

7) Provide for motor control circuits to be connected through auxiliary contacts in power transfer switch (external, separate) so that opening of auxiliary contacts interrupts both motor circuits.

Panels shall conform to the National Electrical Code, 1978 Edition, and to the standards of the National Electrical Manufacturers Association. Components shall be types, make and models in currect production by domestic manufacturers for which replacements are readily available at sources in Anchorage or Kenai.

All components of the pump control panel shall be identified by metal or laminated plastic labels attached with rivets or screws. Terminals and wire ends shall be numbered.

A large, ladder-type diagram and parts list covered with clear, moisture resistant varnish or lacquer shall be installed on the inside of the pump control panel front door.

f. Liquid Level Controls. Liquid level sensors shall consist of mercury switches sealed inside of plastic floats. The floats shall be weighted in a manner to permit tilting, but not floating, in a liquid of specific gravity between 0.95 and 1.10. Each sensor shall be furnished with 30 feet of factory-connected flexible cable.

g. Transfer switch shall be manually operated, 3-pole, 200-AMP, 240V, non-fused double throw switch for transferring power loads to alternate sources. The switch shall be mounted in a NEMA 3R enclosure. The switch shall be provided with auxiliary contacts, closed when the switch is closed in either position. When the switch is operated, the auxiliary contacts shall open before the main switch does. Auxiliary contacts shall be rated at 125V, 5 AMPS.

h. Transfer receptacle and plug shall be a weatherproof cast receptacle, 200 AMP, 600 VAC, 4 wire, 4 pole with threaded cap for mounting to side of transfer switch enclosure for plug-in of portable generator, and mating plug. Appleton "Powertite" Style 1, with mating plug; or approved equal.

i. Alarm transmitter unit shall be a Motorola "Intrac 2000 Status Unit", Model C 1561 A, to interface with Owner's existing Intrac 2000 Central Station. Battery power pack with charger, sealed nickel cadmium battery and AC failure alarm shall be furnished and installed. Housing shall be NEMA 3R.

j. Antenna for alarm transmitter unit shall be a decibel Products, Inc. Model DB-252 para-corner reflector directional antenna. Antenna shall be connected to alarm transmitter with "Andrew LDF Heliax" coaxial cable and proper connectors. The antenna shall be mounted a minimum of 12 feet above ground, to the center.

k. Conduit shall be rigid steel, zinc-coated, with rain-tight, zinc-coated fittings.

l. Conductors shall be all copper, Type THW or THWN and sizes as shown on the plans.

m. Connectors shall be solderless type, conforming to the requirements of the NEC.

n. Fused disconnect shall be 200 AMP, 3-pole, 240 VAC, 4-wire in NEMA 3R enclosure; Square D No. D324NRB, or approved equal.

o. Junction box inside of lift station shall be NEMA-4 type with threaded hubs and watertight glands.

p. Weatherhead shall be 2½-inch cast aluminum or zinc-coated steel.

q. Meter base shall be a surface mounting, 7-clip, 2½-inch hub, 200 AMP unit.

r. Ground rod shall be copper-clad steel, 5/8 inch by 8 feet. Grounding conductor shall be No. 8 bare copper.

s. Pump Chamber. Precast reinforced concrete manhole riser and base sections shall conform to the design and fabrication requirements of ASTM C478. Joint materials shall be rubber gaskets, plastic ("Ram-Nek") gaskets or cement mortar. Pump base anchor bolts shall be cast into the bases, in accordance with size and location requirements of the pump manufacturer; or shall be Hilti "Kwik Bolts", stainless steel imbedded not less than 6 inches. Openings for inlet and outlet pipes shall be formed into the sections at the time of fabrication. The chamber shall be furnished with a steel ladder as shown on the plans. The ladder shall be shop painted with one coat of red oxide primer and one coat of exterior enamel.

t. Pipe and Fittings. Ductile iron pipe shall conform to the requirements of AWWA C151, Class 50, with cement-mortar lining conforming to AWWA C104. Ductile iron fittings shall conform to AWWA C110 except that joints may be of the mechanical type unless shown as flanged on the plans. Flanged joints shall be used at all locations shown on the plans. Flanges shall conform to ANSI B16.1, 125-lb. with full-face rubber gaskets. Steel pipe shall conform to ASTM A53, Schedule 40. Fittings for steel pipe shall be malleable galvanized iron fittings with threaded joints conforming to Federal Specification WW-P-521F, Type II. All steel pipe shall be galvanized.

u. Air Blower. Centrifugal fan air blower shall be driven by a 120-volt, single-phase, A.C. NEMA explosion-proof (totally enclosed) motor. The blower shall be capable of moving not less than 40 cfm of air. Motor and fan housings shall be factory- finished, and shall be provided with permanently lubricated bearings.

v. Mounting Pole. The pole for mounting electrical panels and equipment shall be Douglas Fir or Western Hemlock, fully pressure treated (creosote), 20 feet long, with 6-inch min. tip and 10-inch min. butt.

w. Intermediate guide rail supports shall be furnished by the pump manufacturer, and shall be designed to brace the pump guide rails at mid-height, securely maintaining the correct spacing and positions of the rails. The supports shall not interfere with raising or lowering the pumps. All parts shall have factory applied, corrosion-resisting protective coatings.

x. Drain valve shall be a reinforced-EPT lined hydraulic pinch valve, 3-inch, rated at 125 psi working pressure and operated by hydraulic pressure; Red Valve Co. Type A, or approved equal.

y. Drain valve control pump shall be a regenerative turbine rated to water at the following rates under the discharge pressures indicated:

Pressure lb./sq.in.	Flow Gal./Min.
65	1.2
76	1.0
87	0.8
100	0.6
130	0.3

The pump shall be Burks Model 24CT6M, ¼ HP, single phase, 120 VAC, 1" suction, 1" discharge, with Viton Mechanical Shaft Seal; or approved equal.

z. Gate valves shall be iron body, fully bronze mounted double disc, parallel seat valves conforming to AWWA C500. Valves shall be non-rising stem with 2-inch square operating nuts, extension stems where shown, and flanged ends. Direction of opening shall be counter-clockwise.

aa. Structural steel bars, sheets and shapes shall conform to ASTM A36.

11-03 CONSTRUCTION

a. Shoring. The Contractor shall construct a temporary cell of sheet piling, adequately braced, driven to a depth not less than three feet below the intended bottom of the excavation. The pumping plant location may be excavated before driving of piling, to a depth not greater than 15 feet below the road pavement adjoining.

b. Excavation. The Contractor shall excavate to the depth shown on the plans. The bottom of the excavation shall be leveled with clean sand and gravel and compacted to 95% of maximum density as determined by AASHTO T180.

c. Pump Chamber. After the excavation has been completed, sand and gravel shall be placed in the bottom, compacted, levelled and screeded to a true horizontal plane surface. All stones larger than 1½-inch shall be removed from the upper 2 inches of soil.

The base section shall be set in place, in correct position and aligned with the pipe lines to be connected. It shall be checked for level and bearing. If the base is not within ¼-inch of being truly horizontal, or if it is not firmly bearing on the entire base area, it shall be taken up and reset, with soil scraped away or added to correct the deficiency.

After the base section has been properly installed, the riser sections shall be set in place, with jointing materials forming watertight joints. Care shall be taken in the installation of each riser section that plumbness is maintained. The finished pump chamber shall not vary throughout its entire height by more than 0.2 foot. All lifting holes, chips, pipe entrance holes and wall imperfections shall be filled and neatly finished with mortar.

During the work, the excavation shall be dewatered by pumping. The Contractor shall use any precautions necessary to prevent flotation of the partially completed pump chamber.

d. Backfilling. Material for backfilling shall be sand and gravel containing less than 5% by weight of particles finer than a No. 200 sieve. Backfill material shall be placed around the pump chamber in uniform, level layers of one foot thickness or less. Each layer shall be compacted before additional backfill is placed.

When the backfilling has reached the elevation of an entering pipe, the sheet piling shall be withdrawn to that elevation and the pipe shall be installed and tightly mortared in place. Backfilling shall then be resumed.

e. Equipment and Machinery. Pumps, piping and mechanical equipment shall be installed in accordance with manufacturer's recommendations and approved shop drawings. Threaded pipe joints shall have an application of graphite and oil or other approved joint compound applied to male threads only. Attachment of machinery and equipment to concrete surfaces shall be by embedded bolts, inserts or approved anchors.

f. Electrical Work. All work shall be in conformance with the National Electrical Code and the Plans.

The Contractor shall examine all wiring diagrams and instructions attached in the various panels or furnished by the various equipment manufacturers. If the various diagrams are incomplete for the complete installation, or if they do not correspond with the plans, the Contractor shall refer all diagrams to the Engineer for coordinating.

All conductors in panels shall be securely connected to the appropriate terminals. Wires shall be trained along the perimeter of panels and cabled together. Extra length shall be provided at ends of all conductors.

Conduit penetrations through concrete shall be tightly mortared.

Suspended cables shall be supported from cable racks, and not hung from receptacles, junction boxes or splices.

Junction boxes and panels shall be securely attached to supports, using bolts or lag screws to attach boxes to wood or metal, and "Kwik Bolts" to attach boxes to concrete.

The valve control pump switch shall have affixed a sign indicating:

Drain Valve Control
Summer - OFF
Winter - ON

Rotation direction of all motors shall be checked after final connections have been made, and any incorrect rotation shall be corrected. Rotations shall also be checked while each pumping plant is receiving power from an Owner-furnished portable power plant, and connections shall be changed if necessary to insure correct rotation on this power supply also. The portable generator shall be moved and operated by the Owner's personnel.

After all electrical systems have been completed, the Contractor shall demonstrate, in the presence of the Engineer, that all systems operate properly, and that all circuits are free from unspecified grounds and/or shorts.

g. Cleanup. Upon completion of the construction of the pumping station, all pipe lines shall be flushed and cleaned. All sand, gravel and debris shall be removed from the pump chamber. All exposed steel surfaces not plated or galvanized shall be painted, and all scratches in paint shall be touched up. The ground surface in the construction area shall be smoothed and graded to conform to adjacent terrain or ditches, or to lines and grades shown on the drawings.

11-04 SUBMITTALS

a. Prior to ordering any mechanical or electrical materials, the Contractor shall submit to the Engineer 4 copies of manufacturers descriptive literature including specifications, ratings, capacities, electrical characteristics, pump head/flow curves, electrical diagrams and descriptions of significant features. For pumps, the submittal shall include the name, address and telephone number of the factory-authorized parts and service center nearest to Kenai, Alaska. Within 10 days after receipt of each submittal, the Engineer will return two copies to the Contractor, approved or disapproved.

Prior to final acceptance of the unit by the Owner, the Contractor shall furnish three (3) copies each of the following:

1. Operating manuals for all components giving full instructions for operation, repair, adjustment, lubrication and maintenance.

2. Parts lists and diagrams for all components including accessories, with complete electrical diagrams.

3. Executed and notarized warranties from each responsible party.

b. Prior to doing any excavating for the pumping station, the Contractor shall submit to the Engineer drawings and calculations showing the proposed type

of sheet piling and bracing, including wales, struts and other items. The calculations and drawings shall be prepared by a qualified registered engineer, and shall have his seal and signature affixed.

11-05 MEASUREMENT

The construction of the Sewage Pumping Station shall be measured as one item, complete, including all excavation, temporary sheet piling, materials including all valves, pumps, manhole sections, electrical materials, internal piping, external piping from the pump chamber to the wye fitting joining the two pump discharge lines, and all other items specified, shown and required to complete the pumping station.

11-06 PAYMENT

Payment will be made at the lump sun price bid for:

Item	Pay Unit
Construct Sewage Lift Station No. 6	Lump Sum

INDEX

STANDARD DETAILS

W-S-1	Typical Trench Section
W-2	Steam Thaw Pipes for "L" Base Hydrant
W-3	Water Service Connection, Single
W-3-A	Water Service Connection, Double
W-4	Thrust Blocks
W-5	Typical Valve Box and Lid
W-6	Guard Post Details for Fire Hydrants
W-7	"L" Base Fire Hydrant
S-1	Sewer Service Connection, Single
S-1-D	Sewer Service Connection, Double
S-2	Sanitary Sewer Manhole
S-5	Sewer Encasement
S-6	Sewer Stubout
S-8	Sanitary Sewer Crossing

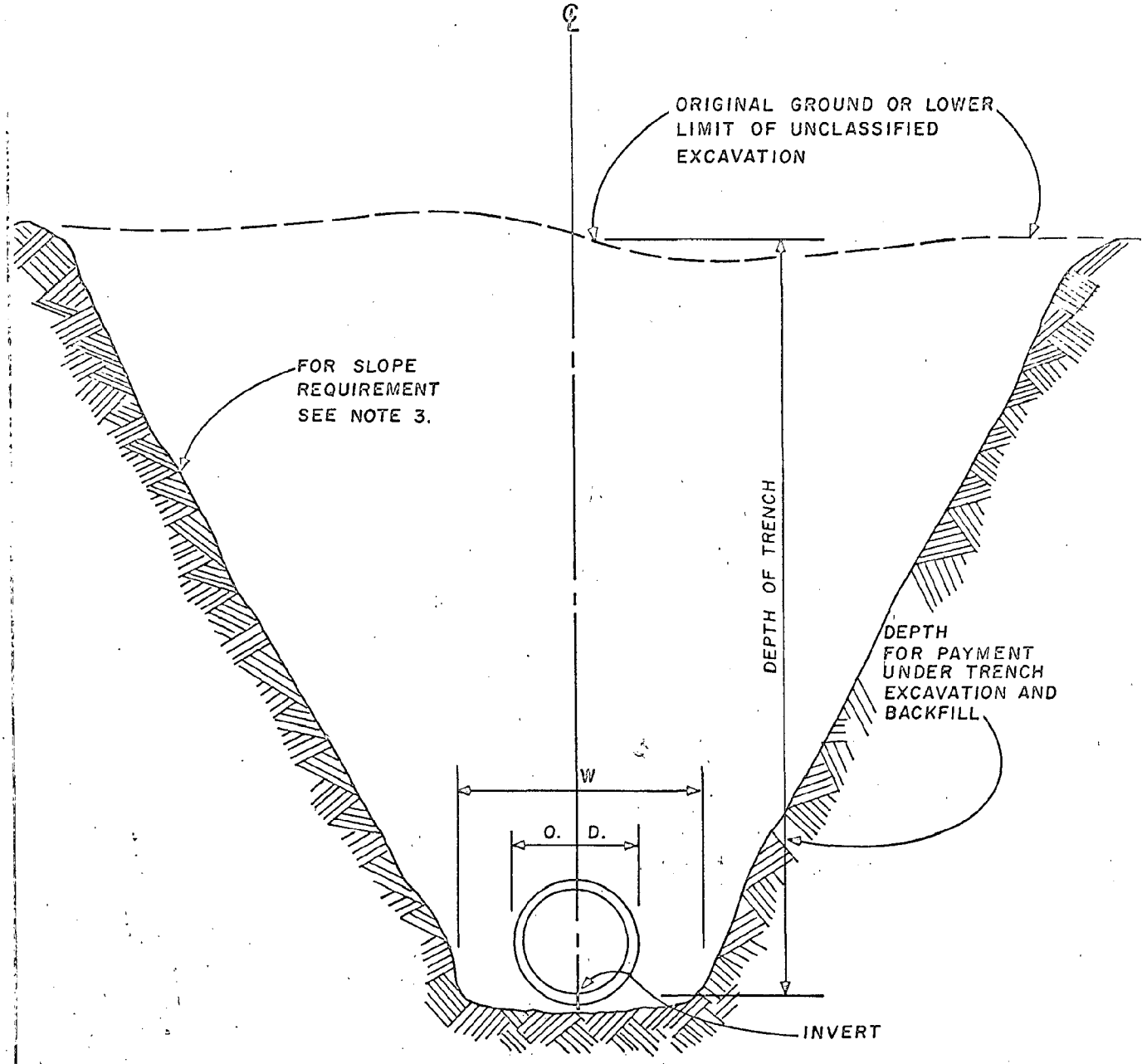

NOTES:

1. NO PAYMENT WILL BE MADE FOR ANY ADDITIONAL DEPTH OF TRENCH UNLESS DIRECTED BY THE ENGINEER.
2. W = O. D. + 18" FOR PIPE SIZES UP TO 24" IN DIAMETER.
3. FOR MINIMUM SLOPE REFER TO CURRENT STATE OF ALASKA GENERAL SAFETY CODE.

TYPICAL TRENCH SECTION
STANDARD DETAIL W-S-1

DRAWN	EP	WINCE • CORTHELL & ASSOC. CONSULTING ENGINEERS	DATE 5/73
SCALE	NONE		SHEET

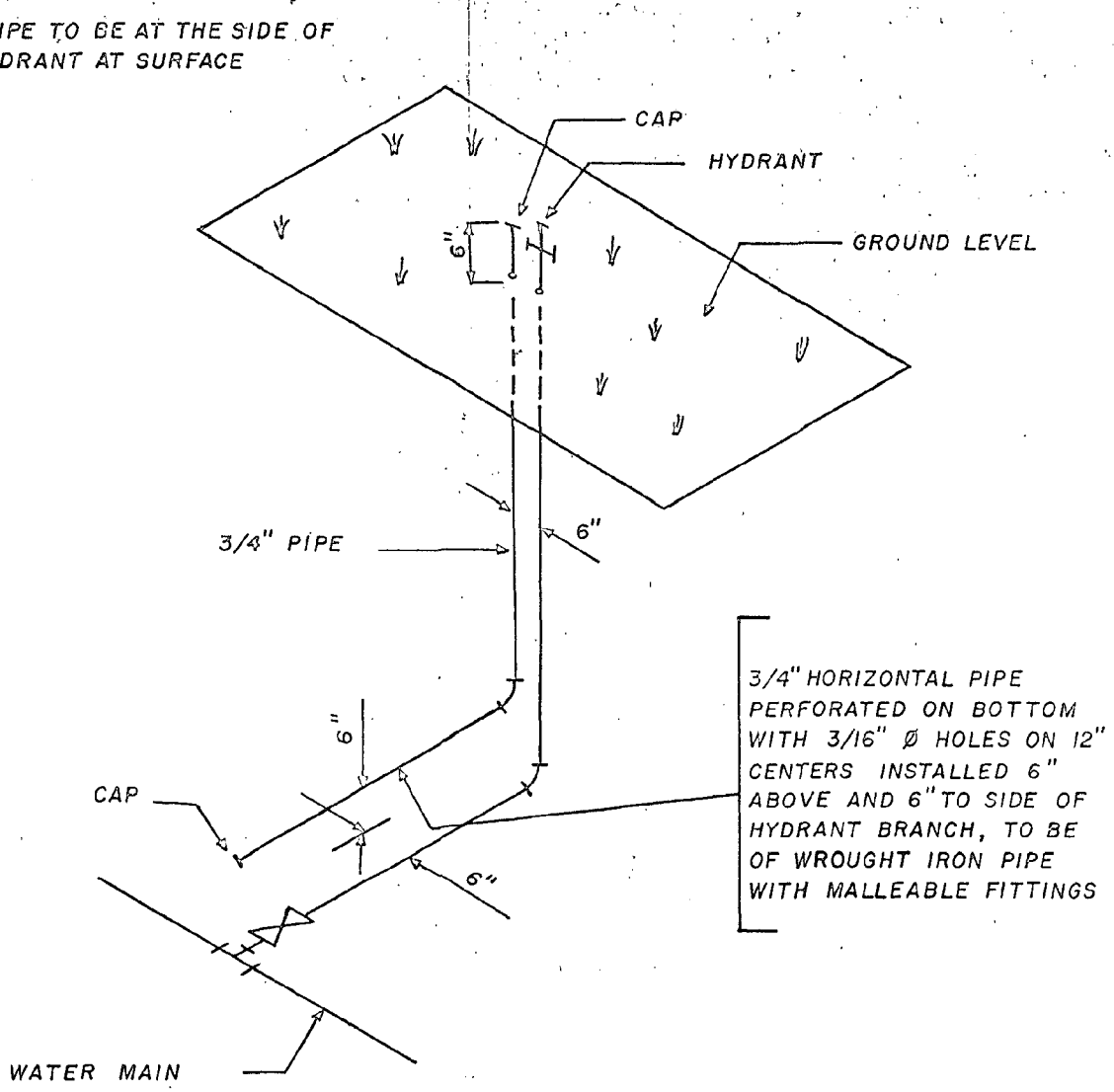

STEAM THAW PIPES FOR "L" BASE HYDRANT

STANDARD DETAIL W-2

DRAWN BY EP	WINCE • CORTHELL & ASSOC.	DATE 4/73
SCALE NONE	CONSULTING ENGINEERS	SHEET

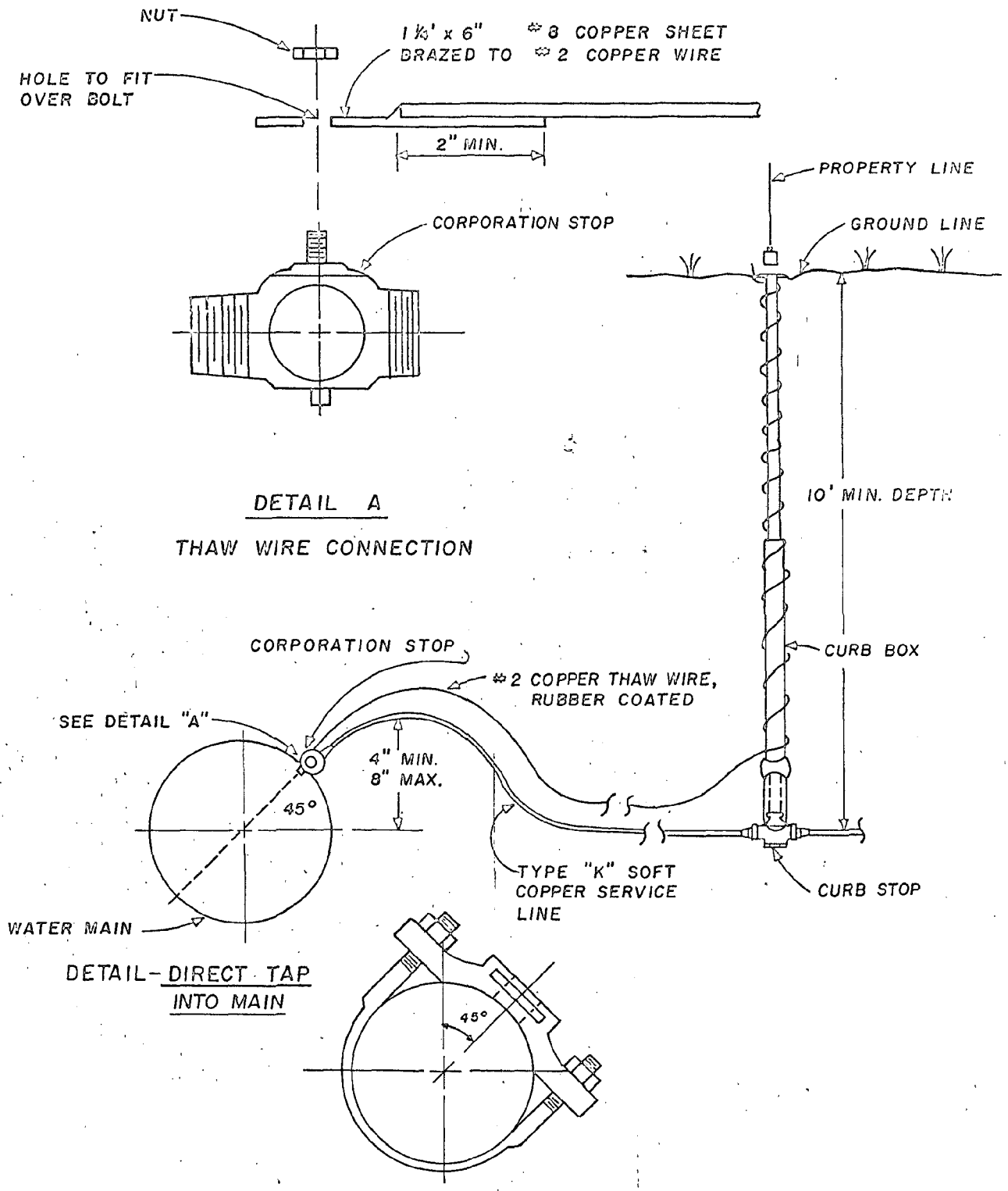

REVISED 7/18/73

WATER SERVICE CONNECTION — 3/4" THRU 2"

STANDARD DETAIL W-3

DRAWN EP	WINCE • CORTHELL & ASSOC.	DATE 4/73
SCALE NONE	CONSULTING ENGINEERS	SHEET

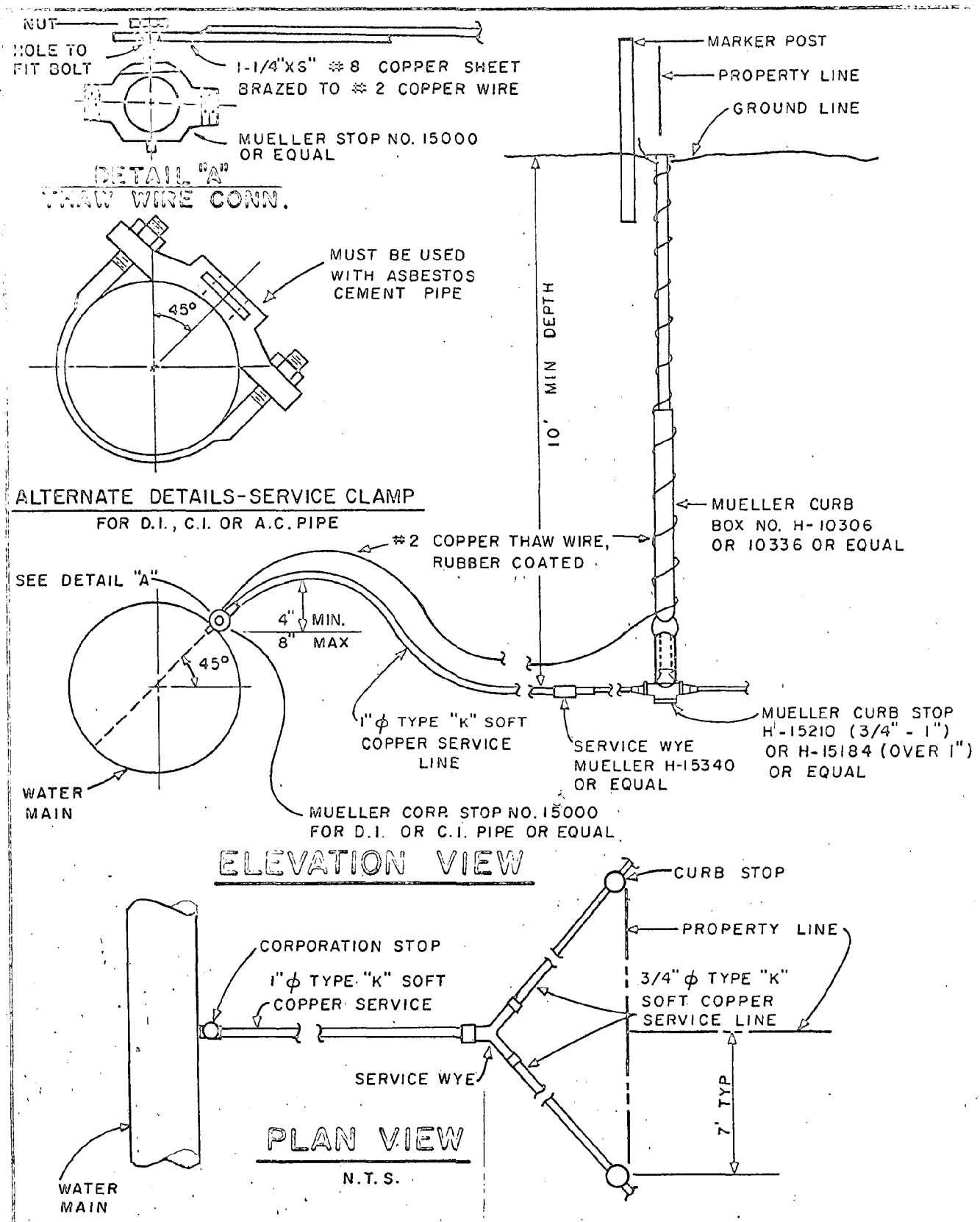

WATER SERVICE CONNECTION — DOUBLE

STANDARD DETAIL W-3A

	WINCE-CORTHELL & ASSOCIATES CONSULTING ENGINEERS	DATE JULY 1976 SCALE NONE

TYPICAL THRUST BLOCK DETAILS

STANDARD DETAIL W-4

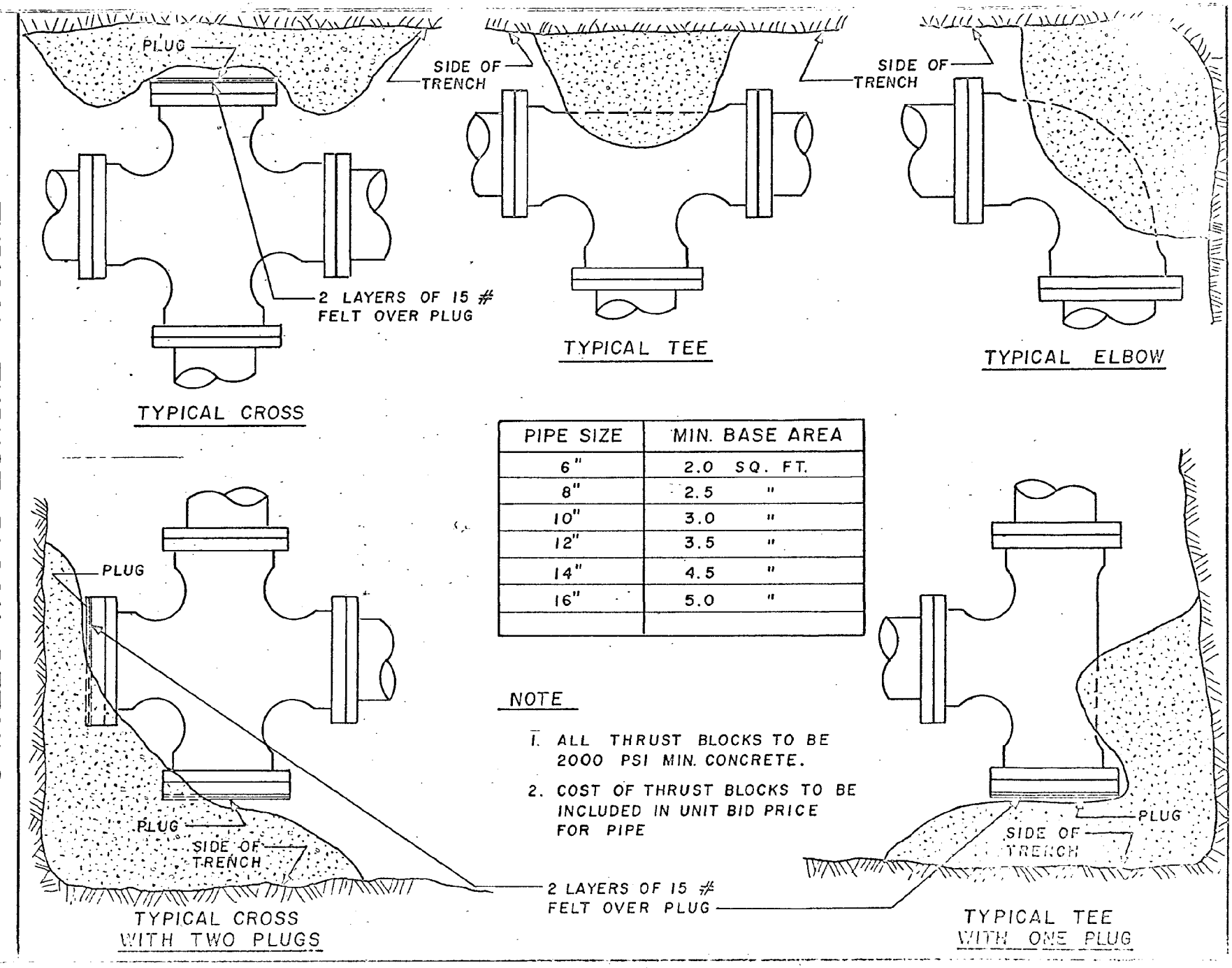

PIPE SIZE	MIN. BASE AREA
6"	2.0 SQ. FT.
8"	2.5 "
10"	3.0 "
12"	3.5 "
14"	4.5 "
16"	5.0 "

NOTE

1. ALL THRUST BLOCKS TO BE 2000 PSI MIN. CONCRETE.
2. COST OF THRUST BLOCKS TO BE INCLUDED IN UNIT BID PRICE FOR PIPE

DRAWN BY EP
SCALE NONE

WINCE • CORTHELL & ASSOC.
CONSULTING ENGINEERS

DATE 4/73
SHEET

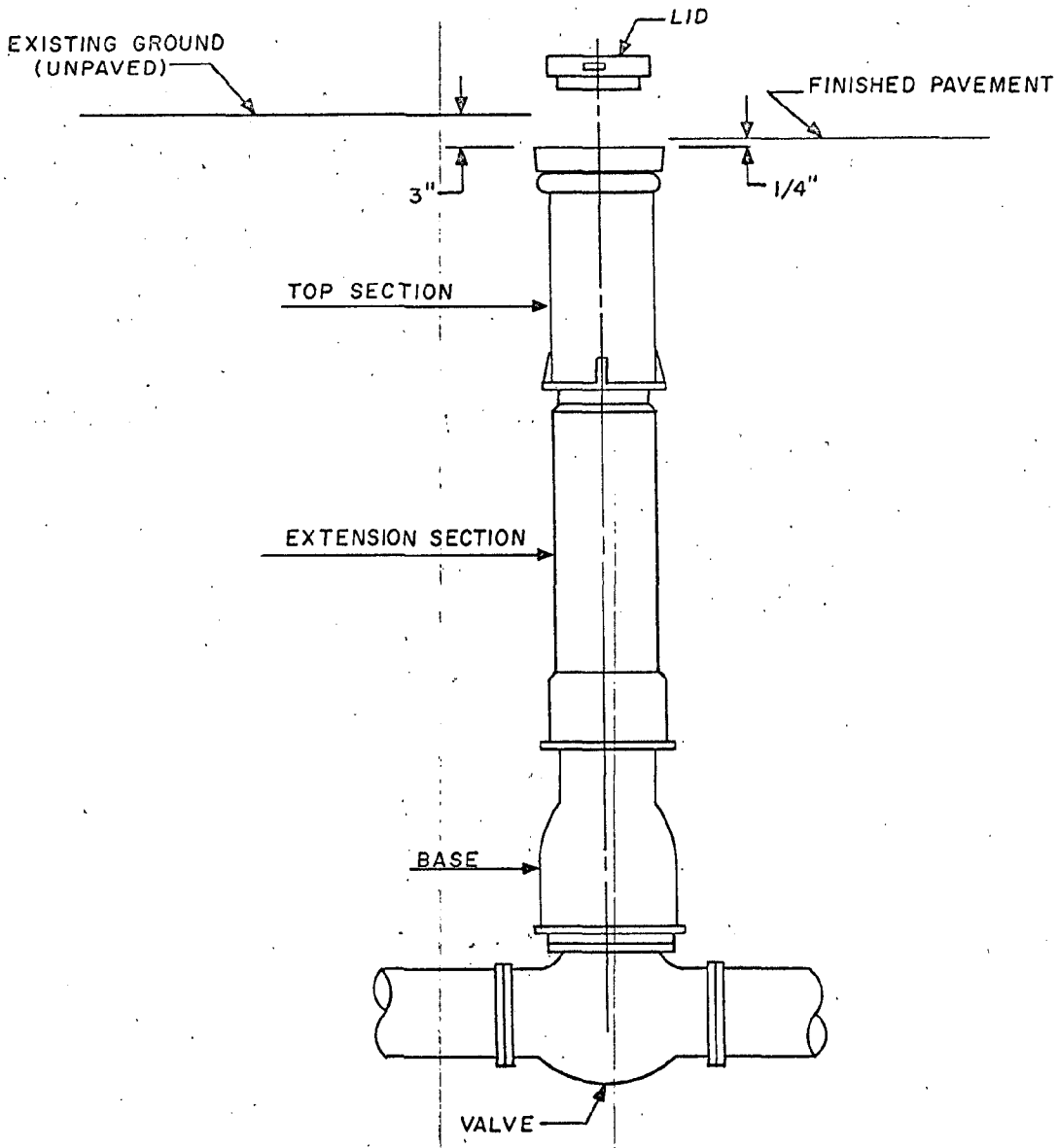

NOTES:

1. VALVE BOX LID TO BE MUELLER H-10361 OR EQUAL.
2. VALVE BOX TO BE MUELLER H-10364 OR EQUAL, FOR 12" PIPE AND SMALLER, ALSO MUELLER H-10380 OR EQUAL, FOR PIPE LARGER THAN 12", BASE OF VALVE BOX FOR PIPE LARGER THAN 12" TO BE MUELLER NO. 6 ROUND OR EQUAL.
3. EXTENSION SECTION TO BE MUELLER H-10375 OR EQUAL.

TYPICAL VALVE BOX & LID
STANDARD DETAIL NO. W-5

DRAWN BY-	WINCE • CORTHELL & ASSOC.	DATE- 9/74
SCALE- NONE	CONSULTING ENGINEERS	SHEET

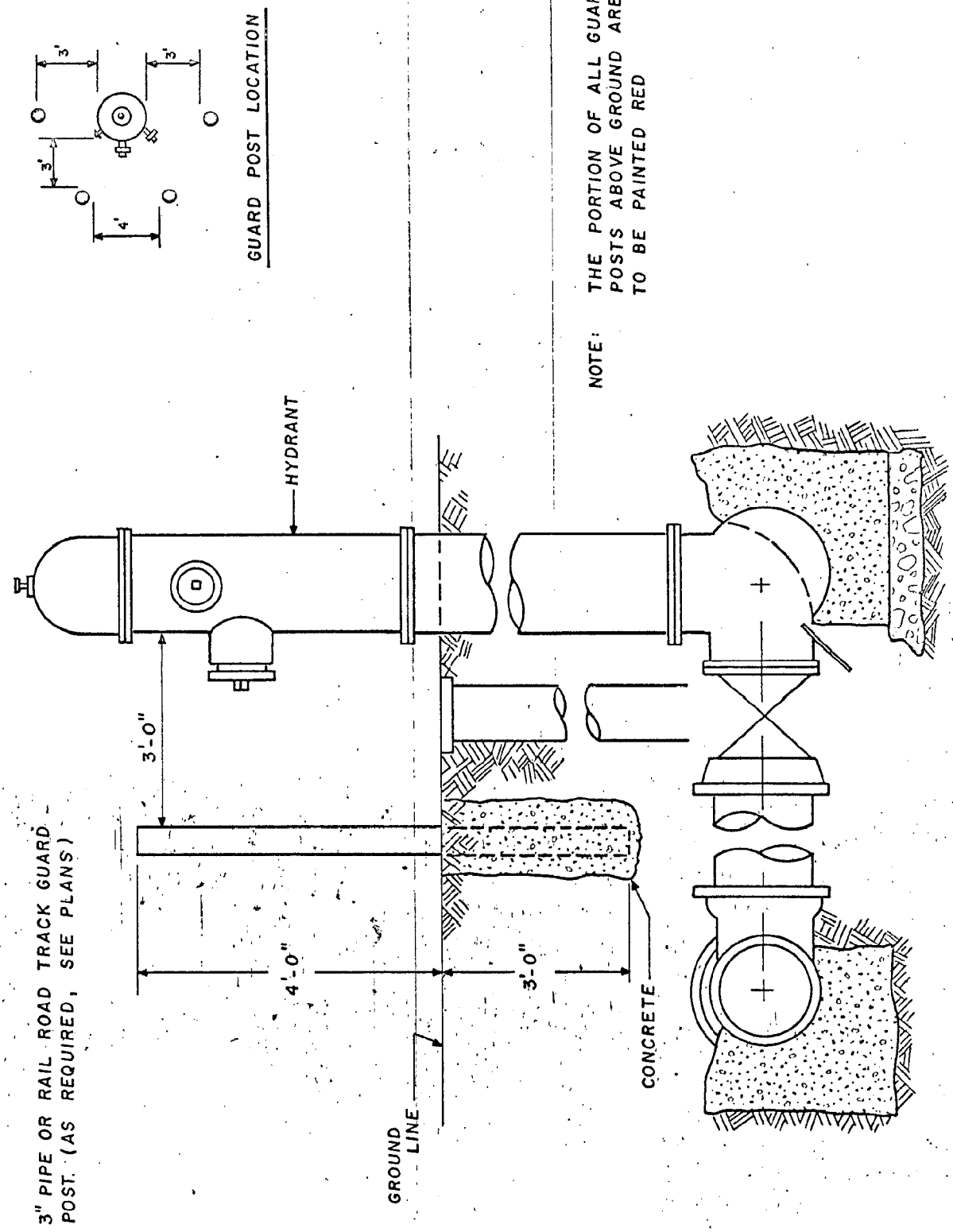

GUARD POST DETAILS FOR FIRE HYDRANT

STANDARD DETAIL W-6

DRAWN BY EP	WINCE • CORTHELL & ASSOC.	DATE 4/73
SCALE NONE	CONSULTING ENGINEERS	SHEET

"L" BASE FIRE HYDRANT

STANDARD DETAIL W-7

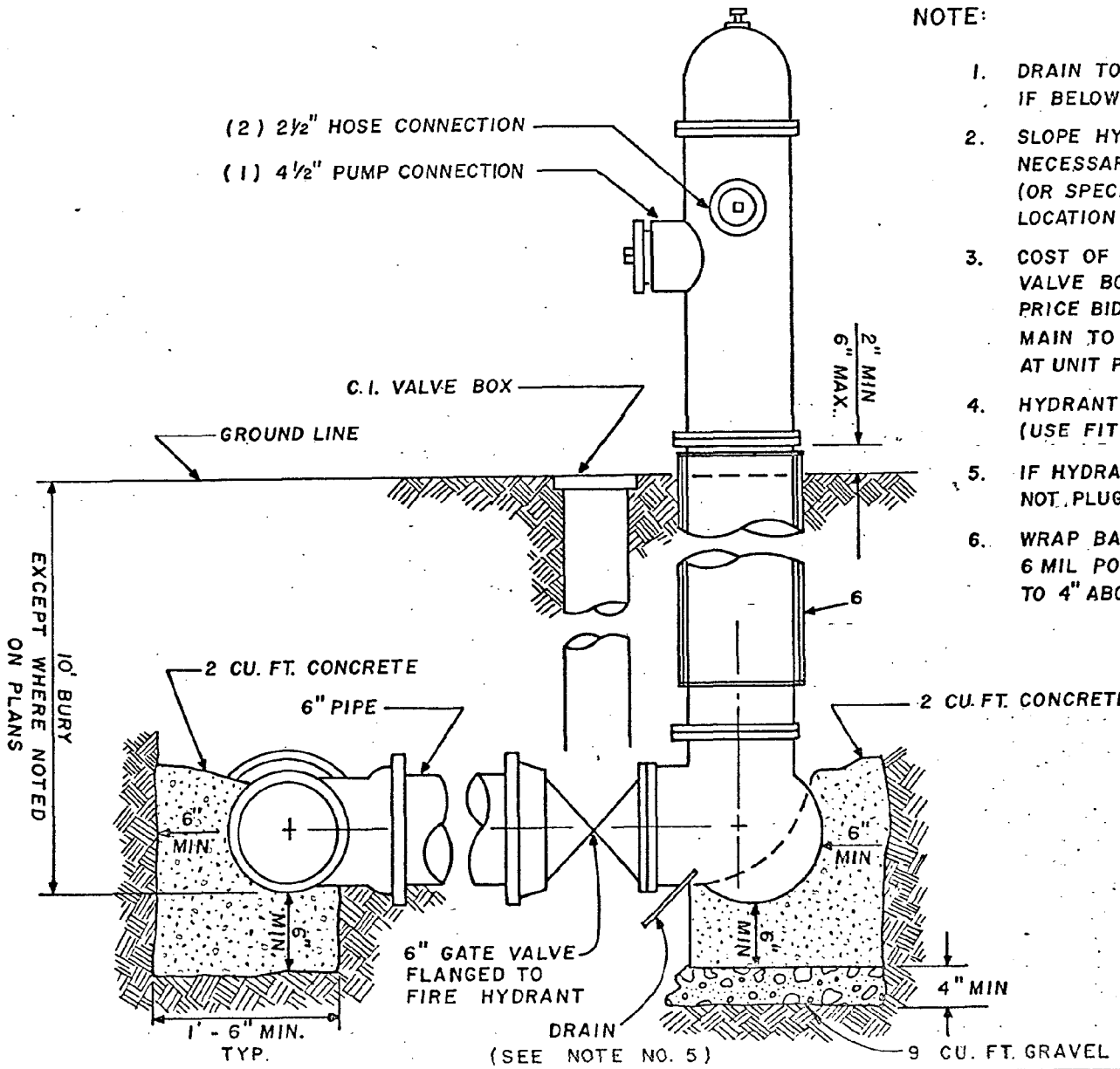

NOTE:

1. DRAIN TO BE PLUGGED WITH LEAD IF BELOW GROUND WATER.
2. SLOPE HYDRANT LEAD UP WHERE NECESSARY TO MAINTAIN 10 FT BURY (OR SPECIFIED BURY) AT HYDRANT LOCATION.
3. COST OF AUXILLIARY GATE VALVE AND VALVE BOX TO BE INCLUDED IN UNIT PRICE BID FOR HYDRANT. LEAD FROM MAIN TO GATE VALVE TO BE PAID FOR AT UNIT PRICE BID FOR 6" PIPE.
4. HYDRANT BARREL MUST BE VERTICAL (USE FITTINGS IF DIRECTED BY ENGINEER)
5. IF HYDRANT DRAIN IS IN BOTTOM DO NOT PLUG WITH CONCRETE.
6. WRAP BASE WITH 2 LAYERS OF 48" 6 MIL POLYETHYLENE, EXTEND 2" TO 4" ABOVE GRADE.

DRAWN BY EP	WINCE • CORTHELL & ASSOC. CONSULTING ENGINEERS	DATE 4/73	SCALE NONE
		SHEET	

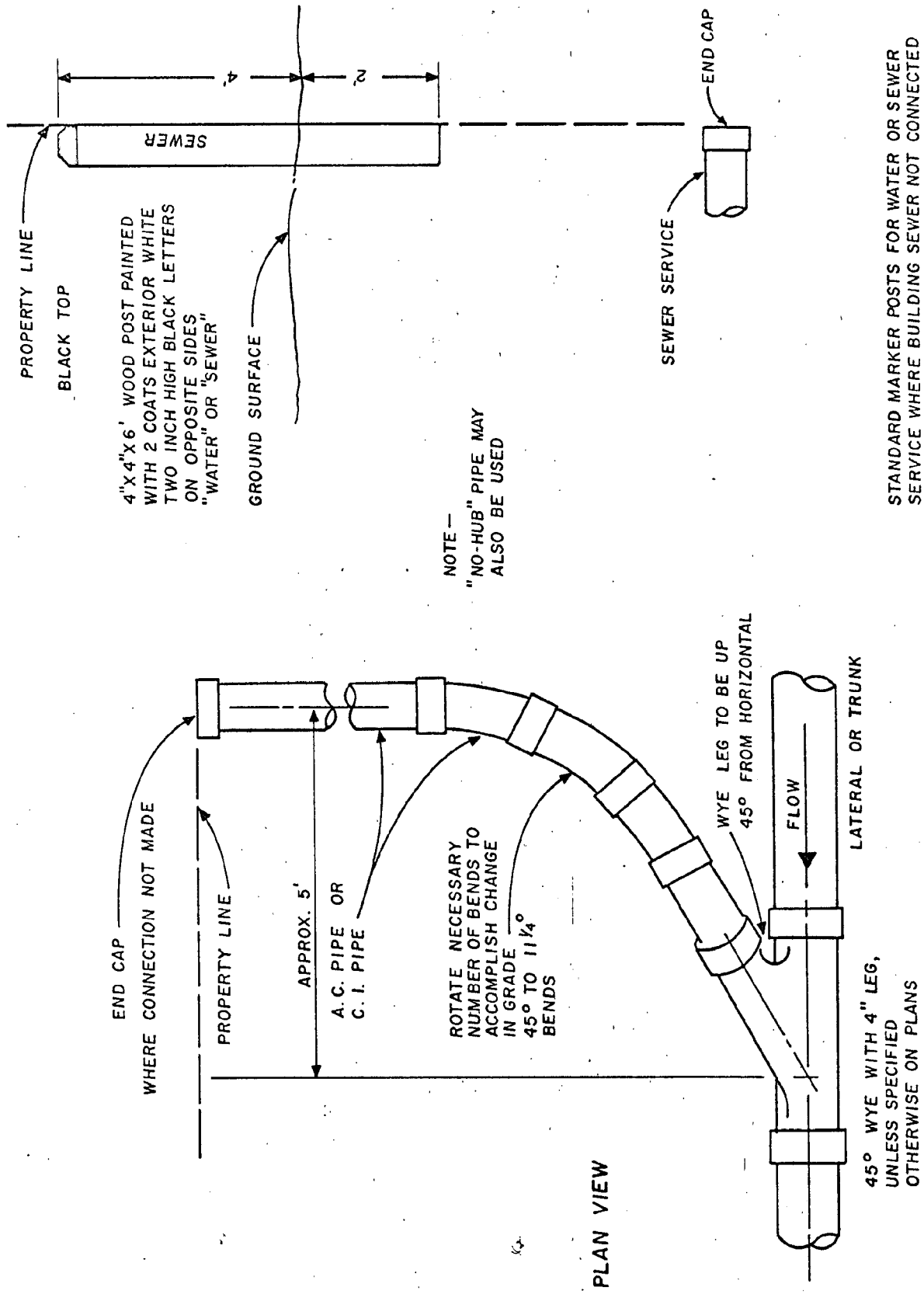

SEWER SERVICE CONNECTION

STANDARD DETAIL S-1

APPROVED CITY MANAGER	CITY OF KENAI WATER AND SEWER DEPARTMENT	DATE MAY 1973 SCALE NONE

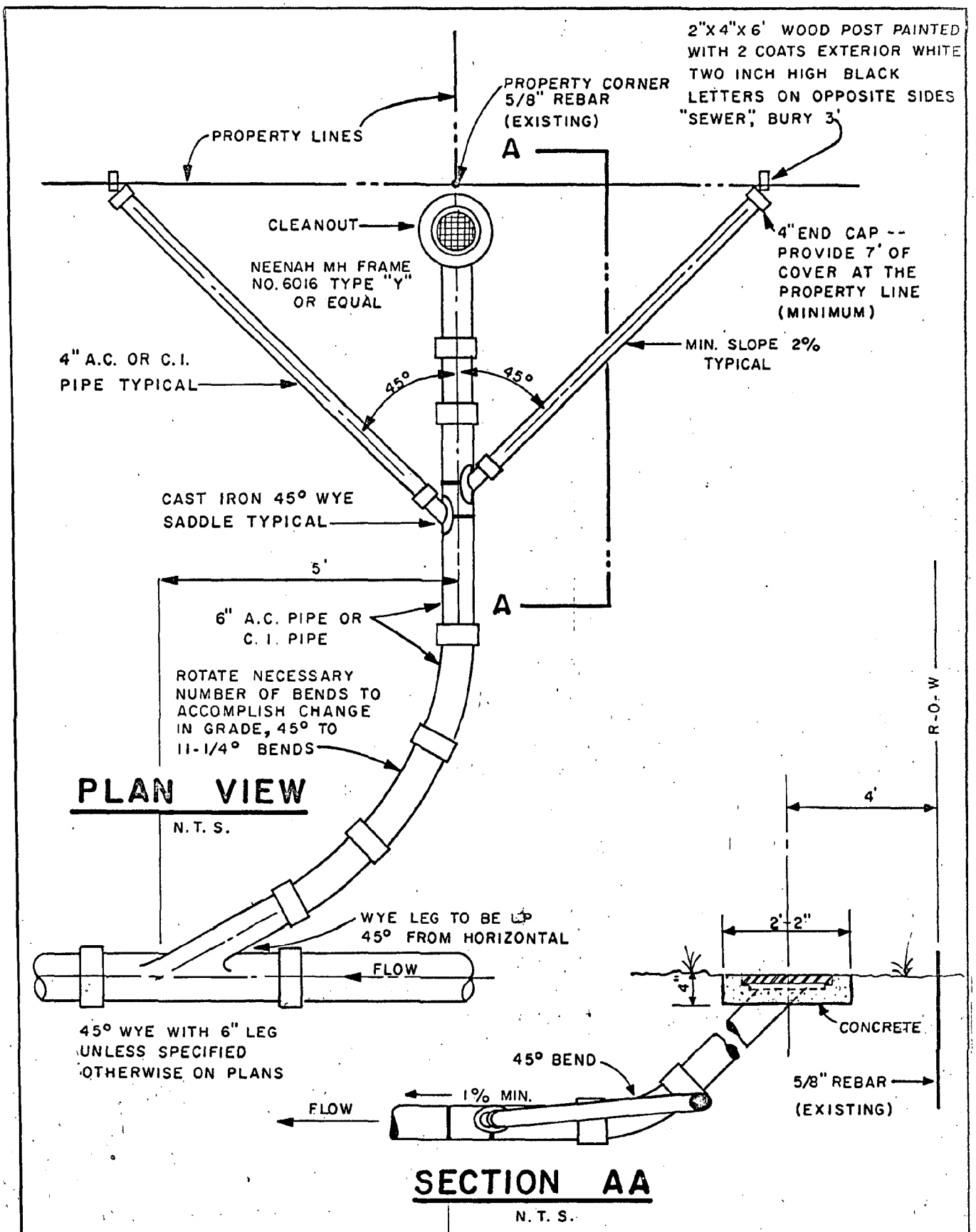

SEWER SERVICE CONNECTION – DOUBLE

STANDARD DETAIL S-1D

	WINCE-CORTHELL & ASSOCIATES CONSULTING ENGINEERS	DATE JULY 1976 SCALE NONE

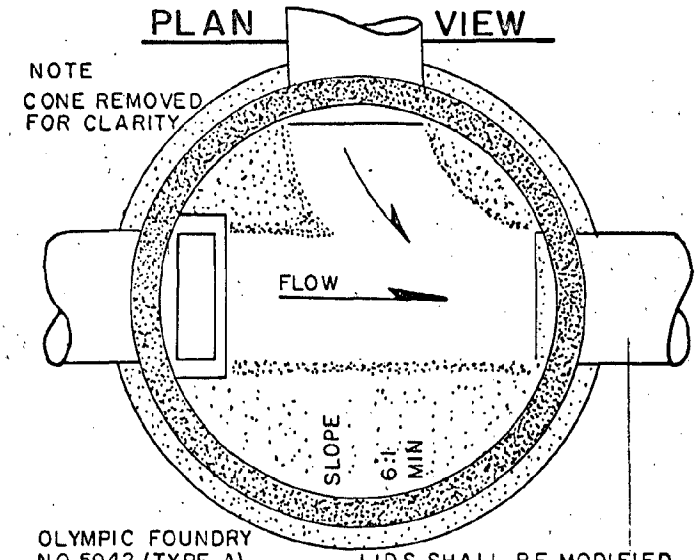

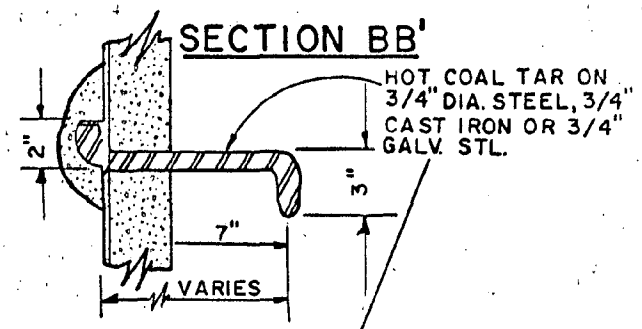

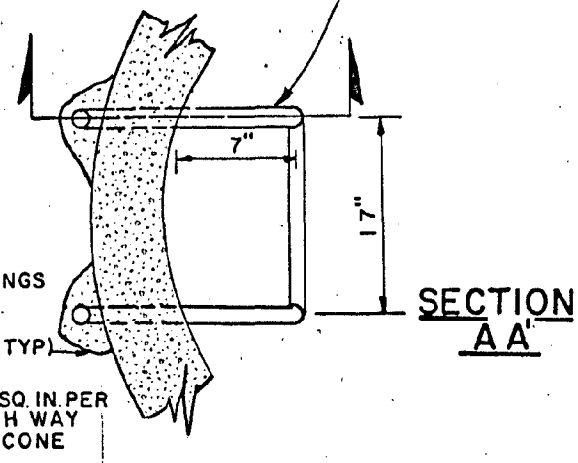

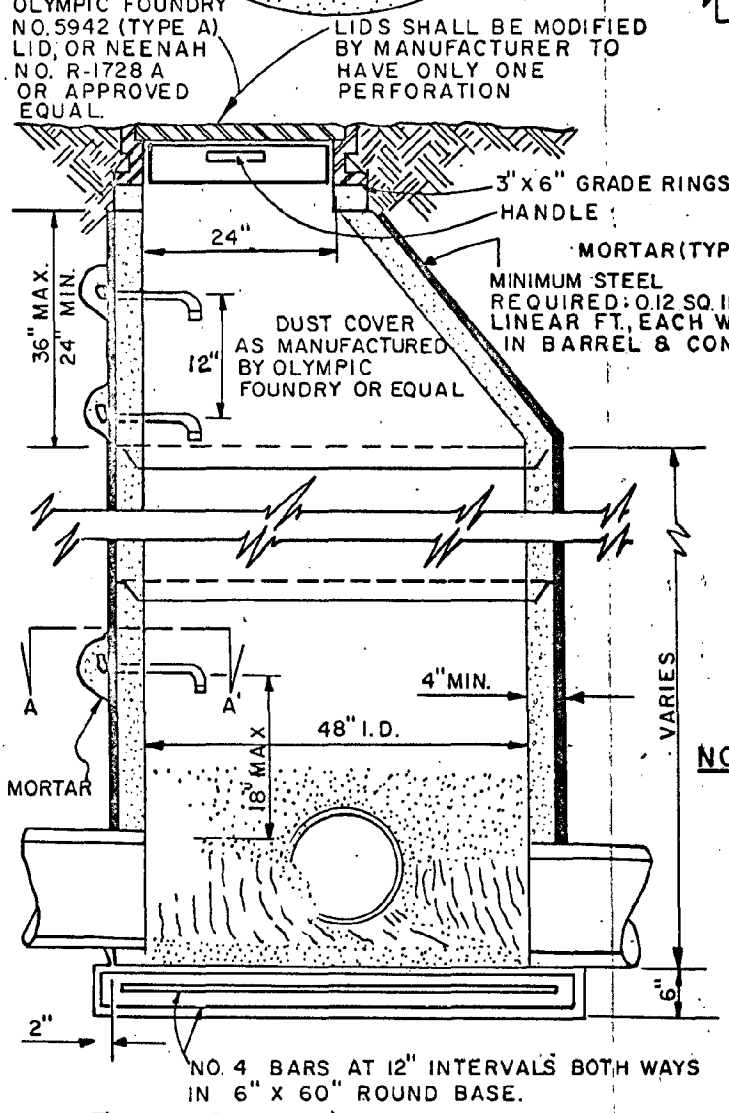

ELEVATION X - SECTION

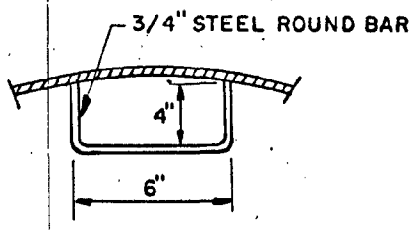

DUST COVER HANDLE

NOTES

1. MAKE UNIFORM APPLICATION OF FLINTKOTE NO. C-13E PRIMER AND C-13 ASPHALT EMULSION OR EQUAL-BRUSHED ON ALL OUTSIDE MORTAR SURFACES.
2. REFER TO A.S.T.M. DESIGNATION C-478 FOR DESIGN REQUIREMENTS.
3. MINIMUM COMPRESSIVE STRENGTH OF CONCRETE IN CONE AND WALL SECTIONS SHALL BE 4000 P.S.I.
4. MINIMUM STEEL REQUIRED FOR BARREL AS PER A.S.T.M. C-478 SHALL BE IMBEDDED IN BASE SO THAT FIRST BARREL IS CONNECTED WITH BASE.
5. TWO (MAXIMUM) OR ONE (MINIMUM) OF GRADE RINGS SHALL BE PROVIDED

SANITARY SEWER MANHOLE

STANDARD DETAIL S-2

DRAWN BY V.V.	WINCE - CORTHELL & ASSOCIATES CONSULTING ENGINEERS	DATE 3/22/77
SCALE NONE		SHEET OF

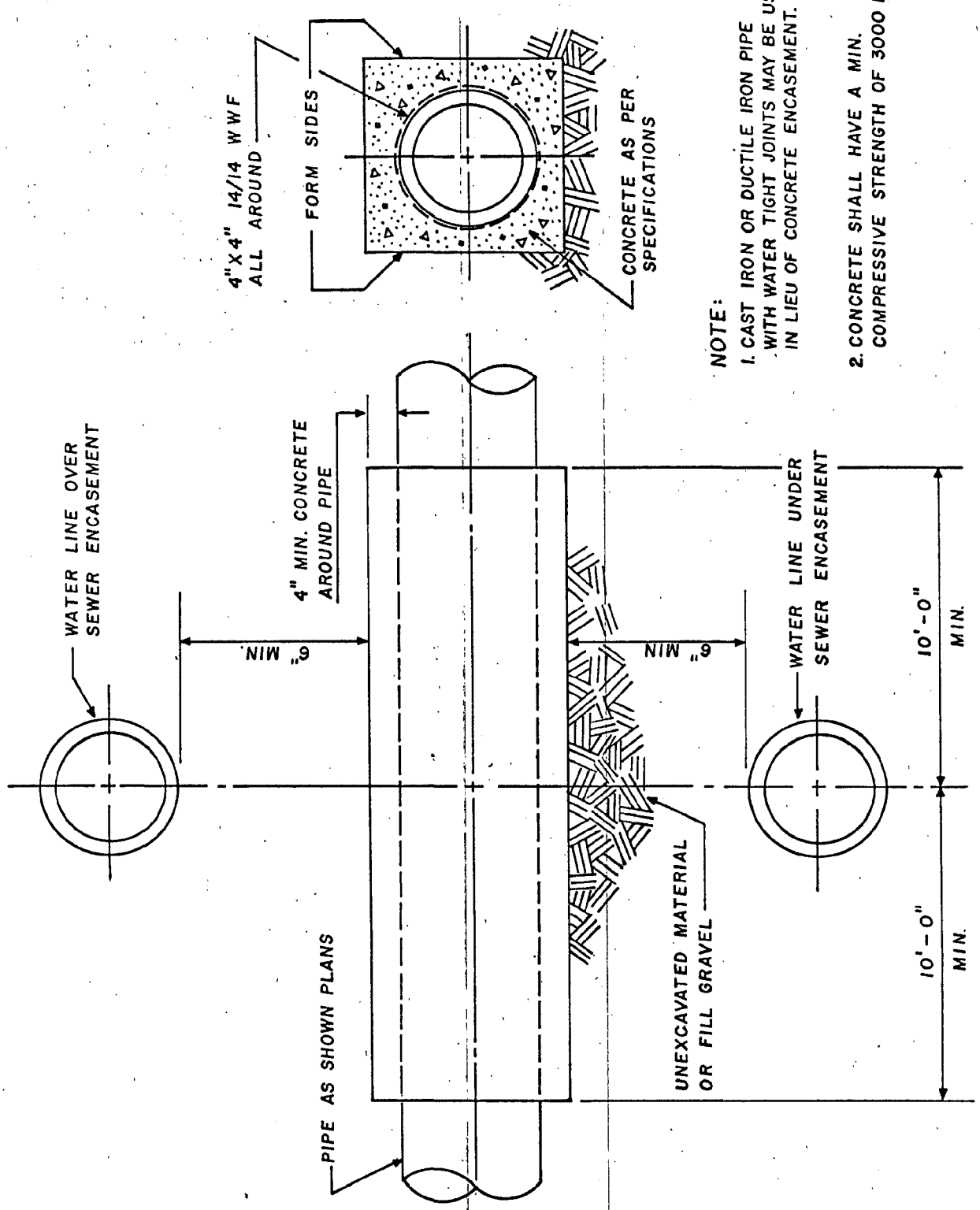

NOTE:

1. CAST IRON OR DUCTILE IRON PIPE WITH WATER TIGHT JOINTS MAY BE USED IN LIEU OF CONCRETE ENCASEMENT.
2. CONCRETE SHALL HAVE A MIN. COMPRESSIVE STRENGTH OF 3000 PSI

SEWER ENCASEMENT

STANDARD DETAIL S-5

DRAWN BY EP	WINCE • CORTHELL & ASSOC.	DATE 4/73
SCALE NONE	CONSULTING ENGINEERS	SHEET

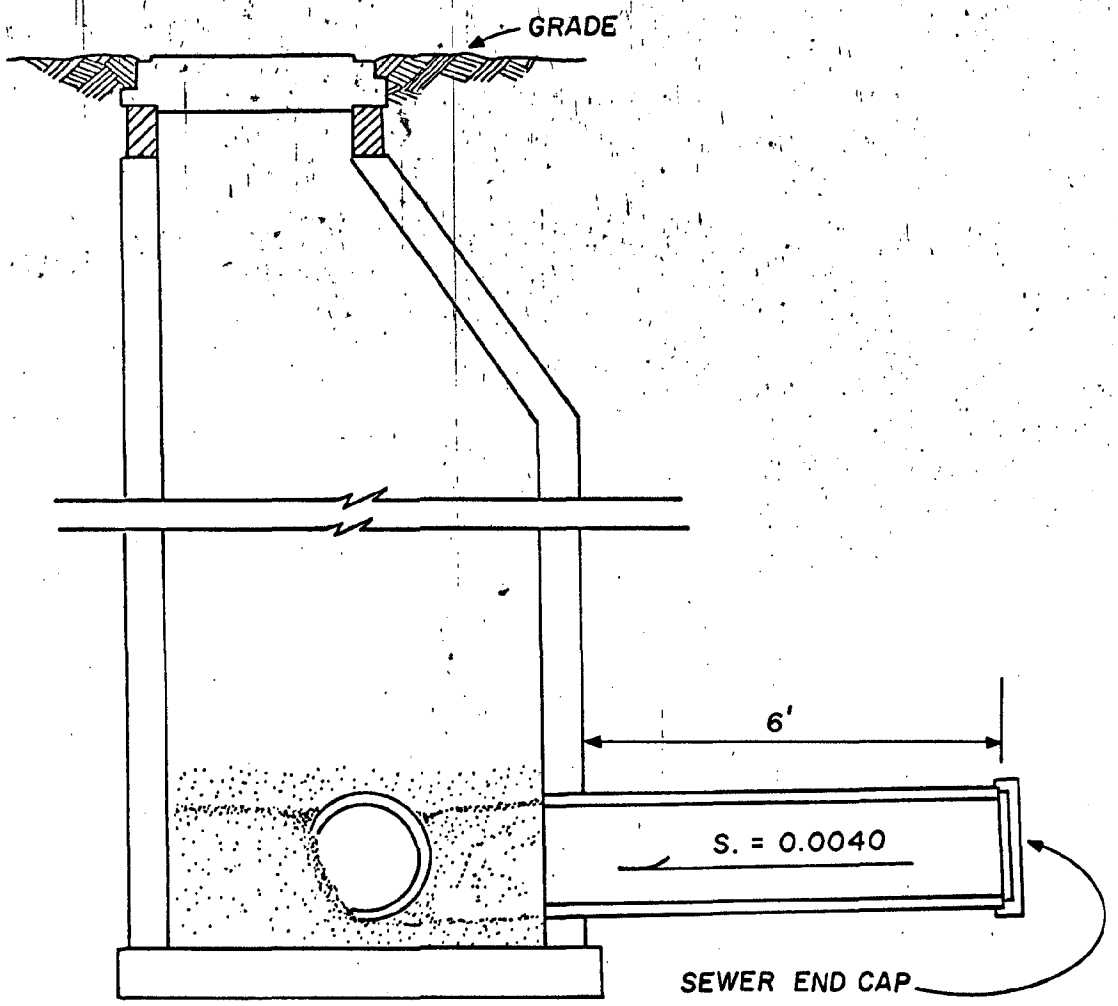

SEWER STUB-OUT
STANDARD DETAIL S-6

DRAWN BY	WINCE - CORTHELL & ASSOC. CONSULTING ENGINEERS	DATE MAY 1973
SCALE NONE		SHEET OF

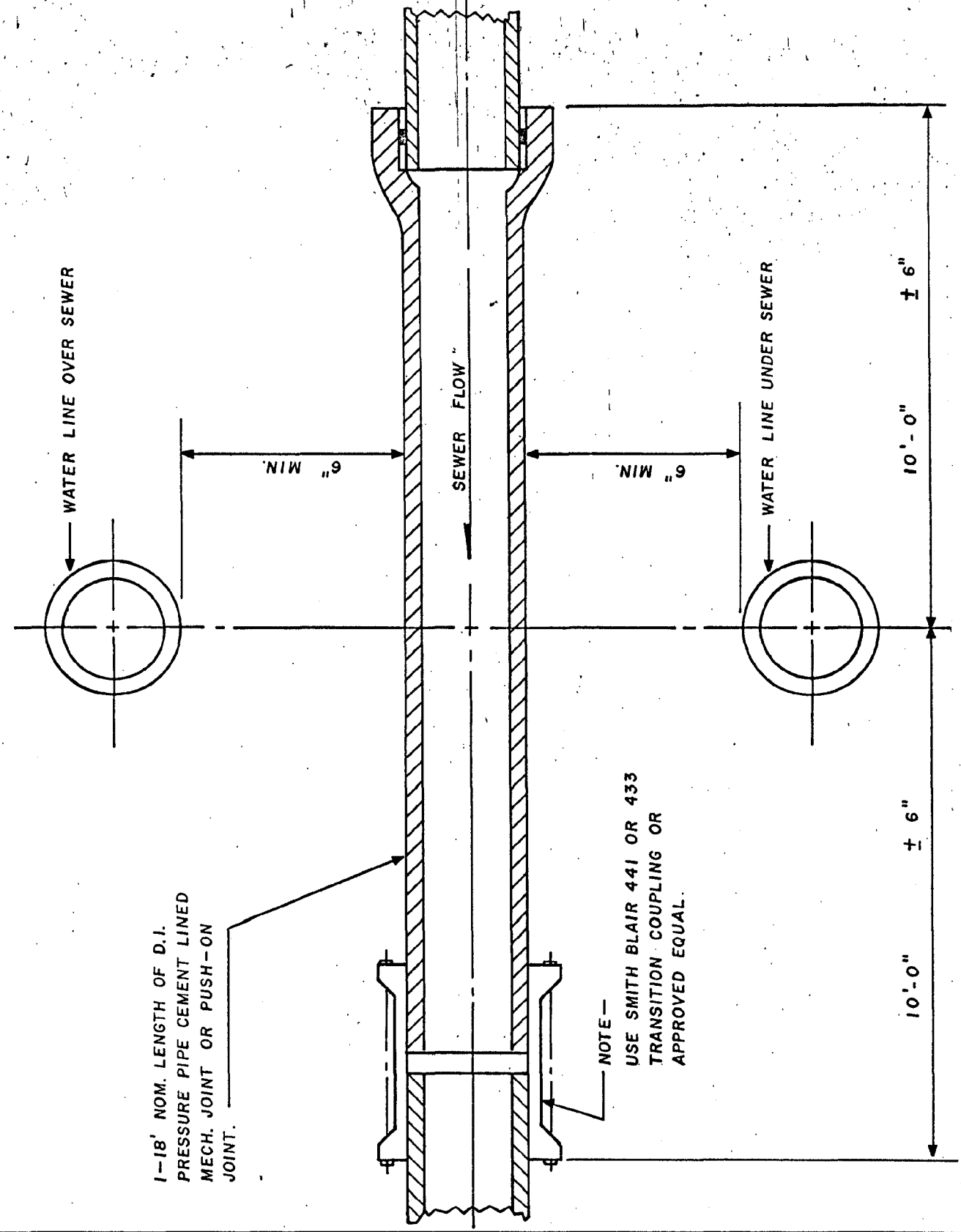

SANITARY SEWER CROSSING

STANDARD DETAIL S-8

DRAWN	TJM	WINCE CORTHELL & ASSOC CONSULTING ENGINEERS	DATE
SCALE	NONE		SHEET

NOAA COASTAL SERVICES CENTER LIBRARY
3 6668 14101 6487