8D-14.1

W.P.

[redacted]

Dept of Natural Resources

COASTAL ZONE
INFORMATION CENTER

HT
393
.M5
L35
1986

Johnson & Anderson, Inc.
Consulting Engineers

U.S. DEPARTMENT OF COMMERCE NOAA
COASTAL SERVICES CENTER
2234 SOUTH HOBSON AVENUE
CHARLESTON, SC 29405-2413

LAKE HARBOR PARK
MONA LAKE CHANNEL ENTRANCE
SHORELINE REVETMENT

MAY 1986

Prepared For:
City of Norton Shores
4814 Henry Street
Norton Shores, MI 49441

Prepared By:
JOHNSON & ANDERSON, INC.
4479 Dixie Highway
Drayton Plains, MI 48020

Property of CSC Library

HT393.M5 L35 1986
DEC 10 1997

J&A File No. 12427-00

ACKNOWLEDGMENT

This report was prepared for the City of Norton Shores under an Engineering Services Agreement dated March 7, 1986. The study effort has been funded in part by a Coastal Zone Management grant from the Michigan Department of Natural Resources.

MONA LAKE CHANNEL ENTRANCE
SHORELINE REVETMENT

Table of Contents

	Page No.
Introduction	1
Nature and History of the Problem and Previous Solutions	3
Solutions Considered	6
Discussion of Design Criteria	11
Discussion of Recommended Alternative	12
Phased and Alternate Construction	16

MONA LAKE CHANNEL ENTRANCE
SHORELINE REVETMENT

INTRODUCTION

The City of Norton Shores is located in western Michigan, on the shores of Lake Michigan in Muskegon County (Figure 1). Mona Lake flows to Lake Michigan through a 35 feet wide connecting channel. The outlet channel, at Lake Michigan, extends through the beach and coastal dunes, and is lined by parallel steel sheet pile bulkheads. The steel sheet pile channel is approximately 250 feet long. Allignment of the sheet pile lined channel bends slightly northward at the landward end of the channel.

Immediately landward of the steel sheet pile, the Mona Lake channel widens out into a shallow basin approximately 150 feet square. There are remains of various shore protection measures within this basin area to include wood bulkheads and rock revetments. At the landward end of the northern steel sheet pile there is a wooden bulkhead running northerly. The bulkhead is just above present lake levels; the land behind the bulkhead has been severely eroded. At the landward end of the southern sheet pile there are remains of a rip rap revetment and a wooden bulkhead.

The channel extends through a gap in the coastal dunes approximately 150 feet wide. The land area between the bluff of the adjacent dunes and the outlet channel is a sandy beach approximately 1 to 2 feet above present lake levels. The beach between the bluffs and channel is approximately 30 feet wide on the north side of the channel and approximately 70 feet wide on the south side of the channel. Measured perpendicular to the shoreline, the north beach is approximately 160 feet wide, and the south beach is approximately 110 feet wide. Littoral movement is from the north as evidensed by the wider beach on the north side of the channel.

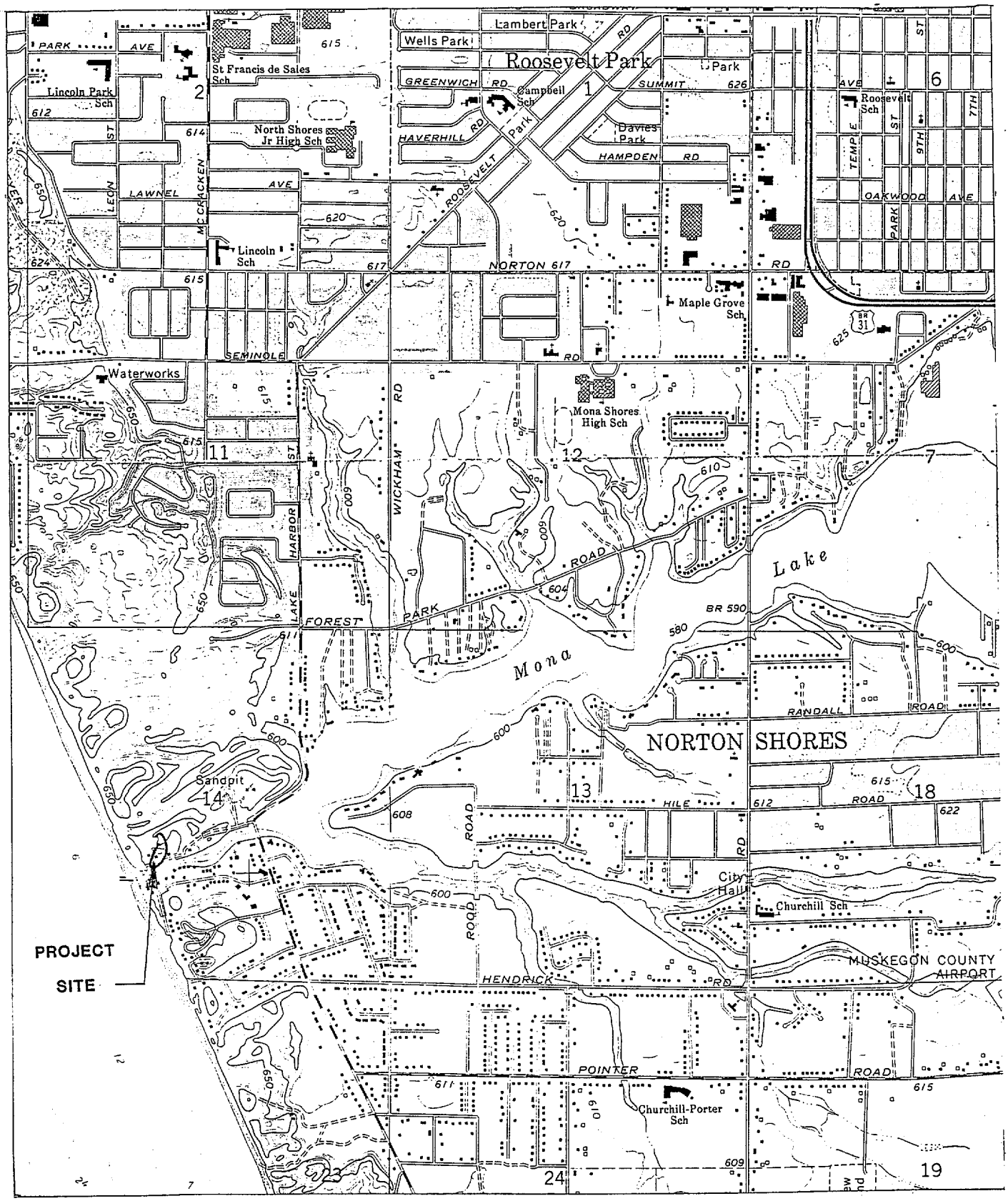

TAKEN FROM:
U.S. Geological Survey
Muskegon West Quadrangle
1972

Contour Interval = 10 feet
Dotted Lines Represent
5 – Foot Contours

Scale 1" = 2000'

JOHNSON & ANDERSON, INC.	CITY OF NORTON SHORES MONA LAKE CHANNEL ENTRANCE SHORELINE REVETMENT	VICINITY MAP
12427-00 APRIL 1986		FIGURE 1

There are remains of wood piles on both sides of the channel, extending from the dune bluffs and paralleling the Lake Michigan shoreline. At one time, these piles were probably part of a wooden seawall installed to prevent Lake Michigan waves from overtopping the beach. The sheet pile channel mouth runs approximately due east/west. Not unlike many Lake Michigan coastal facilities, the Mona Lake channel at Lake Michigan has experienced severe and continuous erosion damage in the last ten years of high lake levels. The purpose of this report is to identify the causes of the erosion and to suggest alternative designs to stabilize the erosive forces of the high lake levels.

NATURE AND HISTORY OF THE PROBLEM AND PREVIOUS SOLUTIONS

The Mona Lake outlet channel has been lined by either wooden bulkhead or steel sheet pile since at least the mid-1970's. In the mid-1970's a wooden bulkhead lined the outlet channel near Lake Michigan. Steel sheeting has since replaced most of the wooden bulkhead, but some of the wooden bulkheads on the landward ends of the steel sheet pile remain.

The wooden bulkhead extended on the southern side of the outlet channel about 150 feet up the channel from the landward end of the existing steel sheet pile. At the landward end of the southern steel sheet pile there are the remains of a rip rap revetment and the wooden bulkhead, which have been washed into the Mona Lake channel. The revetment and bulkhead were progressively destroyed by recent storms.

At the landward end of the northern sheet pile there exists a wooden bulkhead which extends from the steel sheet pile. There has been severe erosion behind both the wooden bulkhead and the steel sheet pile wall.

Lake Levels

The high Lake Michigan levels of the past ten years have caused the loss of the off-shore, protective beach. Waves from Lake Michigan now break closer to shore causing erosion of the beach and dunes adjacent to the channel. The loss of beach and dune near the Mona Lake outlet allows for waves to break on, run-up, and overtop the beach into the Mona Lake channel "basin" area. Overtopping of the beach can occur during large storms, and especially when the Lake Michigan levels are at their highest.

Overtopping of the beach is the probable cause for the recent loss of portions of the wooden bulkhead and the rip rap revetment on the southern side of the outlet channel. Overtopping may have contributed to the loss of soil behind the northern wooden bulkhead.

Wave Attack

When the Lake Michigan levels were lower, the wooden bulkhead which extended approximately 150 feet up the southern side of the Mona Lake channel from the landward end of the present steel sheet pile protected the south side of the channel from boat wakes and wave action. At the same time, the north side of the channel was exposed to the boat wake erosion. In addition, the vertical, impervious south bulkhead reflected boat wakes and waves causing further erosive action to be directed to the north bank. Aerial photographs from the mid-1970's show evidence of the effects of this erosive action. Since the removal of the wooden bulkhead from the south side of the channel, boat wakes and waves have been eroding the south bank, as well as, the north bank.

Erosion behind the wooden bulkhead on the northern side of the outlet channel is still occurring. Some of this erosion is due to boat wakes and other waves in the "basin" area which overtop the wooden bulkhead. With the present high lake level, this action is frequent. Undoubtedly, sand is being washed from behind this bulkhead by currents set up by these waves.

Wind Generated Waves

When winds are from the west, waves are generated which can travel straight up the Mona Lake outlet channel. When winds are from directions other than the west (i.e. northwest or southwest), the waves generated will enter the channel mouth, impact the steel sheet pile walls, and reflect up the channel. When the

wooden bulkhead on the south bank was in place, the waves were either directed further up the channel, or reflected around within the "basin" area. Under those conditions the channel and basin was probably quite choppy until the waves reached the unprotected north banks of the basin where their energy could be dissipated. With the wooden bulkhead in place on the south side, wave damage probably concentrated on the north bank. Under present conditions, wave energy is absorbed, with resulting erosion, on both the north bank and south bank.

In summary, the causes of the erosion problems at the Mona Lake channel outlet are due to the following:

1. High lake levels which allow for the overtopping of the beach by Lake Michigan wave run-up during storms. The overtopping has recently washed out a wooden bulkhead and rip rap revetment and is causing, or contributing to, erosion at the landward ends of the steel sheet pile on both the northern and southern sides of the outlet.

2. Boat wakes and other reflected waves which travel from Lake Michigan along the steel sheet pile cause erosion of unprotected banks in the "basin" area of the Mona Lake channel. These waves also set-up currents which erode sand from behind the wooden seawall on the northern side of the outlet channel.

3. Waves which travel straight up the outlet channel from Lake Michigan can attack the southeastern bank of the outlet channel.

SOLUTIONS CONSIDERED

The evaluation of the nature of the erosion problem at the Mona Lake channel outlet indicates that any proposed solution must be designed to handle 1) overtopping of the beach by wave runup; 2) boat wakes and other reflected waves; and 3) wind generated waves which travel straight up the outlet from Lake Michigan (Figure 2).

Existing and New Features to be Incorporated

The existing steel sheet pile bulkhead is to remain in-place. Although it stabilizes the outlet, it does not dissipate wave energy. Boat wakes and other waves are reflected off the steel sheet pile and travel up the outlet to the "basin" area. The "basin" area should be fortified to withstand these waves, and to dissipate the wave energy if a problem further up the outlet channel is to be avoided.

There is a new section of steel sheet pile bulkhead which is to be constructed during summer 1986 on the north side of the outlet channel as part of the construction of a walkway through the dunes. The existing wooden bulkhead will be removed as part of the proposed construction. Any proposed solution to the erosion problem at the Mona Lake channel outlet should incorporate this new section of sheet pile.

Dissipate Wave and Wake Energy

Pervious, rough, inclined, surfaces such as rip rap and stone are good ways to dissipate wave energy in the "basin" area. Waves impacting such surfaces will be trapped in the rough, open spaces in the surface, thereby dissipating wave energy. The "basin" area should be protected by rip rap or stone on one or both shores to dissipate the energy of waves from boat wakes, reflected waves, and wind generated waves travelling straight up the channel. Possible solutions include rip rap revetments and stone filled gabion revetments for the basin area. Rip rap is a layer or facing of randomly placed stones to protect the shore from erosion. See Figure 3 for sketches of rip rap revetments.

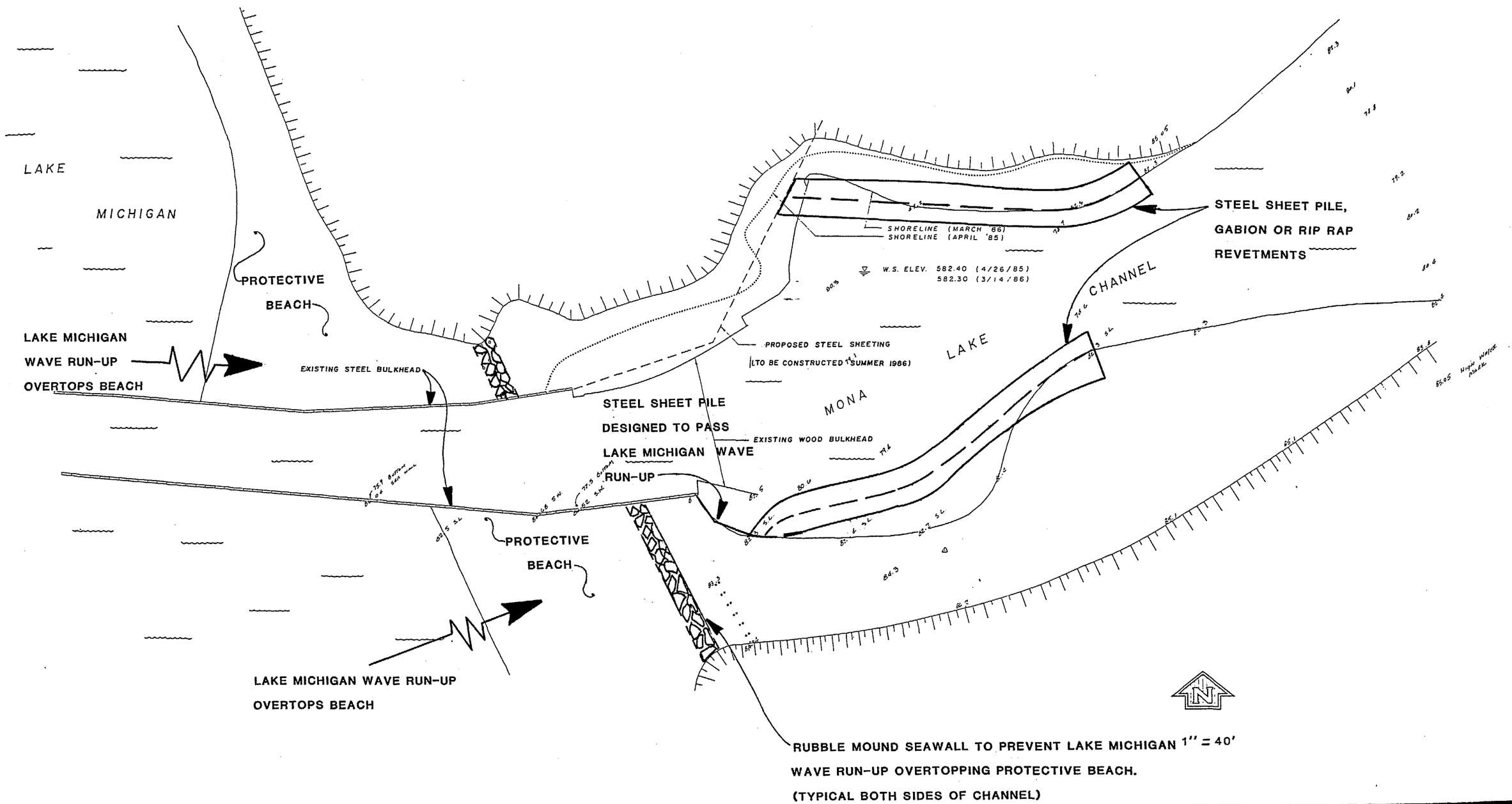

JOHNSON & ANDERSON, INC. 12427-00 APRIL 1986	CITY OF NORTON SHORES MONA LAKE CHANNEL ENTRANCE SHORELINE REVETMENT	SOLUTIONS CONSIDERED FIGURE 2

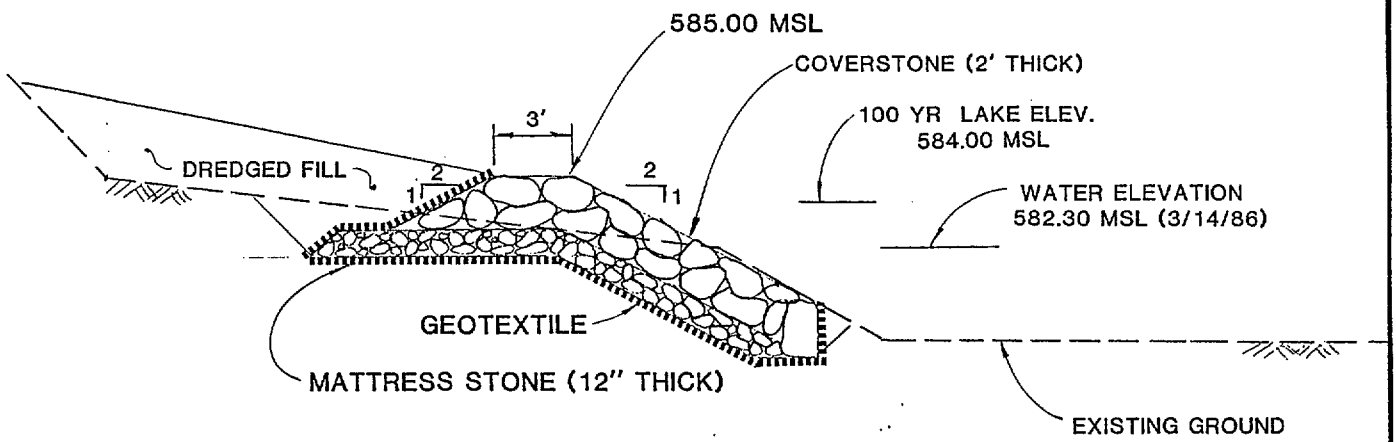

RIP RAP REVETMENT

NORTH BANK

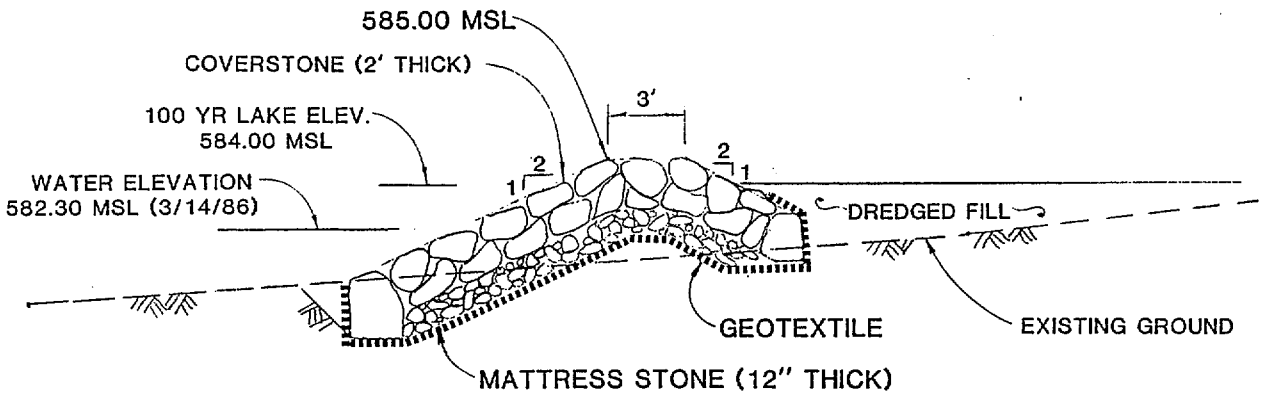

RIP RAP REVETMENT

SOUTH BANK

JOHNSON & ANDERSON, INC. 12427-00 APRIL 1986	CITY OF NORTON SHORES MONA LAKE CHANNEL ENTRANCE SHORELINE REVETMENT	CROSS SECTIONS FIGURE 3

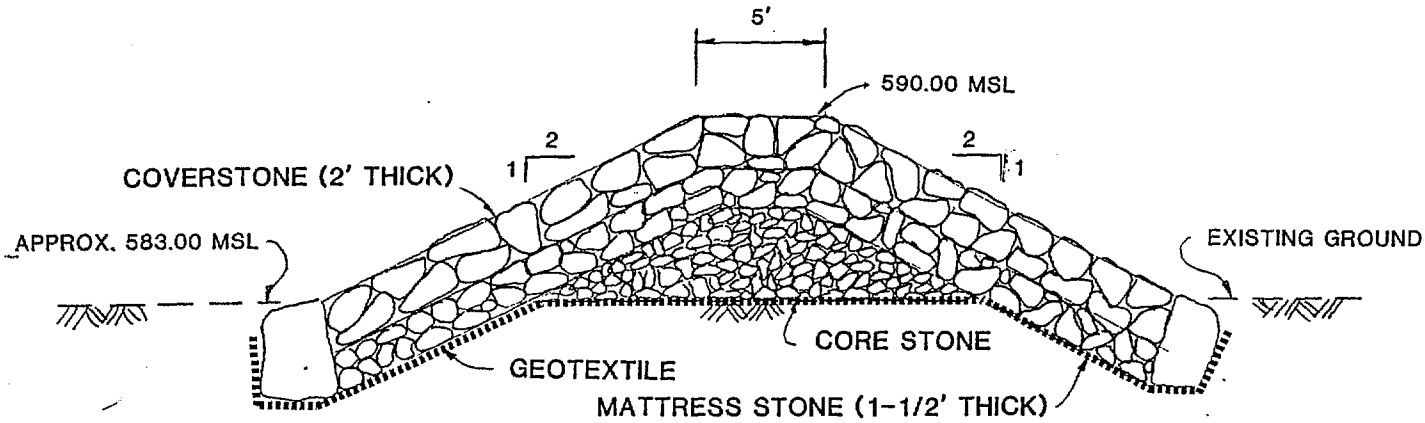

RUBBLE MOUND SEAWALL

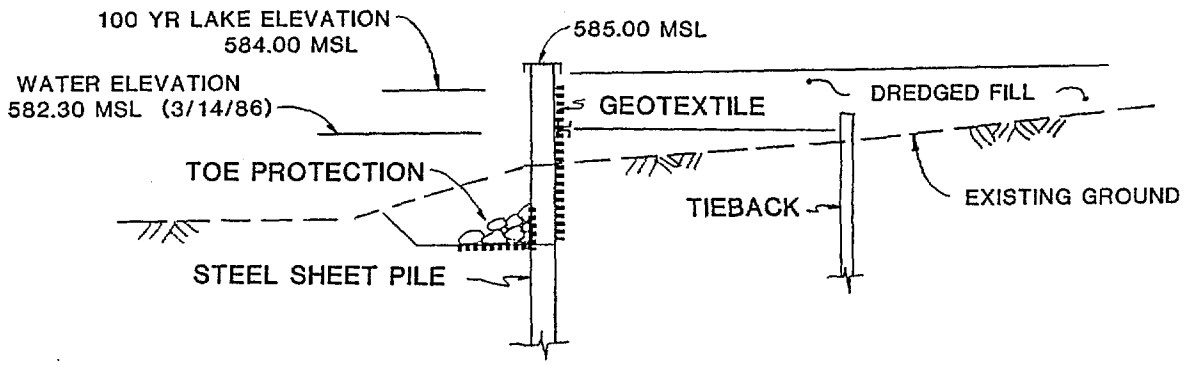

STEEL SHEET PILE BULKHEAD

JOHNSON & ANDERSON, INC. 12427-00 APRIL 1986	CITY OF NORTON SHORES MONA LAKE CHANNEL ENTRANCE SHORELINE REVETMENT	CROSS SECTIONS FIGURE 4

Gabions are wire, plastic coated wire, or plastic baskets which are filled with rock. The baskets are filled with rock smaller than rip rap size, and used like "building blocks" to protect the shore from erosion.

Beach/Water Access

It may be desirable to provide some additional new sections of steel sheet pile in the "basin" area which will allow for boat landings and moorings, and access to the water from the beach without having to walk over a rip rap or gabion surface. The placement of the new sections of steel sheet pile would have to be carefully designed so that boat wakes and other waves would be reflected onto a pervious, inclined, rough surface such as a rip rap or a gabion revetment. Steel sheet pile is relatively high in cost, but is a sturdy, low maintenance structure. See Figure 4 for a sketch of a steel sheet pile bulkhead.

Lake Michigan Wave Run-up

Whether steel sheet pile, and/or rip rap or gabion revetments are used to line the "basin" area, the shore side of these structures must also be protected from Lake Michigan wave run-up which overtops the beach. These structures must be designed to allow for drainage of the wave run-up from the channel basin shore side. Normally, drainage from the shore side of these types of structures (steel sheet pile and revetments) is not considered significant in design.

There are several ways to handle the drainage of wave run-up over the sheet pile and/or revetments. A rubble seawall constructed parallel to the Lake Michigan shoreline was considered. A rubble seawall would be designed to prevent the overtopping of Lake Michigan wave run-up on the protective beach. See Figure 4 for a sketch of a rubble mound seawall. This structure would be high in cost, would require maintenance especially at the ends of the structure and may increase the wave attack of the dunes at the ends of the seawalls. If the seawall were designed to prevent overtopping, its height would block the view of the lake and and be an impediment to beach use. This alternative was determined unfeasible since it would be high in initial and maintenance costs, would be aesthetically unattractive, and would require the cooperation of the adjacent land owner to the south.

A better alternative for handling the drainage of wave run-up around and over the sheet pile and revetments is to design these structures to incorporate the features of a porous seawall type dike. The features of the porous seawall type dike would allow drainage to pass through layers of graded stone and/or filter fabric in the seawall so that sand erosion on the shore side of these structures would be minimal. This alternative anticipates the Lake Michigan wave run-up overtopping the beach, and provides for drainage of the wave run-up without severe erosion of the basin shore. A seawall type dike on top of the revetments would be high in cost and would require maintenance, but this alternative would be effective in controlling the drainage of wave run-up.

Three systems of shore protection have been discussed in this section. The advantages and disadvantages of the considered solutions are listed and compared below, with preliminary cost estimates following.

Rip Rap Revetment

Advantages - 1) Waves dampened by rough, inclined, pervious surface
2) Size of stone discourages vandalism
3) Size of stone allows some foot traffic

Disadvantages - 1) Higher cost due to large size stones required
2) Some maintenance required

Gabion Revetment

Advantages - 1) Waves dampened by rough, inclined, pervious surface
2) Lower cost due to smaller size stones required to fill baskets

Disadvantages - 1) Gabion baskets subject to vandalism
2) Maintenance required
3) Foot traffic difficult on gabions due to smaller size stones, and wire baskets

Steel Sheet Pile Bulkhead

Advantages - 1) Easier access to beach and water
2) Low Maintenance
3) Utilizes less space

Disadvantages - 1) High Cost
2) Reflects waves and wakes causing choppy water, possibly moving erosion problem further upstream.

PRELIMINARY COST ESTIMATE SOLUTIONS CONSIDERED

I. RUBBLE MOUND SEAWALL

	NORTH SIDE OF CHANNEL		SOUTH SIDE OF CHANNEL	
A. Cover Stone @ $110/Ton	90 TONS:	$ 9900.	256 TONS:	$28160.
B. Mattress Stone: @ $55/Ton	77 TONS:	$ 4235.	215 TONS:	$11825.
C. Core Stone: @ $25/Ton	48 TONS:	1200.	135 TONS:	3375.
D. Filter Cloth: @ $3.50/YD^2	120 YD^2:	420.	330 YD^2:	1155.
E. Beach Access Walkover: @ $1500/Each	1 EACH:	1500.	1 EACH:	1500.
Subtotal:		$17255.		$46015.
Contingencies @ 25%		4315.		11505.
TOTAL		$21570.		$57520.

II. STEEL SHEET PILE CHANNEL REVETMENT

A. Steel Sheet Pile With Pile Cap and Tie Backs @ $180/LF	170 LF:	$30600.	210 LF:	$37800.
B. Geotextile @ $3.50/YD^2	135 YD^2:	473.	165 YD^2:	578.
C. Dredged Fill @ $10/YD^3	200 YD^3:	2000.	790 YD^3:	7900.
D. Toe Protection (100 LF) @ $45/Ton	33 TONS:	1485.	33 TONS:	1485.
Subtotal:		$34558.		$47763.
Contingencies @ 25%:		8642.		11942.
TOTAL		$43200.		$59705.

PRELIMINARY COST ESTIMATE SOLUTIONS CONSIDERED

III. RIP RAP CHANNEL REVETMENT

	NORTH SIDE OF CHANNEL (170 LF)		SOUTH SIDE OF CHANNEL (210 LF)	
A. Cover Stone: @ $90/Ton	230 TONS:	$20700.	280 TONS:	$25200.
B. Mattress Stone: @ $45/Ton	140 TONS:	$ 6300.	165 TONS:	7425.
C. Geotextile: @ $3.50/YD^2	455 YD^2:	1593.	560 YD^2:	1960.
D. Dredged Fill: @ $10/YD^3	290 YD^3:	2900.	250 YD^3:	2500.
Subtotal:		$31493.		$37085.
Contingencies @ 25%		7877.		9275.
TOTAL		$39370.		$46360.

IV. GABION CHANNEL REVETMENT

		(170 LF)		(210 LF)
A. Crushed Stone Mattress: @ $9/YD^3	50 YD^3:	$ 450.	55 YD^3:	$ 495.
B. Geotextile: @ $3.50/YD^2	380 YD^2:	1330.	560 YD^2:	1960.
C. Gabion: @ $200/YD^3	135 YD^3:	27000.	210 YD^3:	42000.
D. Dredged Fill: @ $10/YD^3	290 YD^3:	2900.	230 YD^3:	2300.
Subtotal:		$31680.		$46755.
Contingencies @ 25%:		7920.		11685.
TOTAL		$39600.		$58440.

DISCUSSION OF DESIGN CRITERIA

The primary purpose of this investigation of design alternatives is to protect the banks of the Mona Lake Channel Entrance from erosion. No direct attempts have been made to protect or preserve the sand dunes along the lake shore, the protective beach between the lake dunes and the channel, or the sand dunes along the entrance channel. Protecting the entrance channel banks from erosion provides indirect protection to the sand dunes along the entrance channel. By stopping the erosion of the toe of the dune on the north channel bank, the dune will be protected from damage. The dune will continue to slough, however, until it reaches a point of equilibrium with dune grass growth and the natural angle of repose of the dune sand.

On the south shore of the channel, protecting the shore and beach from further erosion will indirectly protect the adjacent dune. It to, however, will continue to experience sloughing until it reaches a point of equilibrium.

Design of shore protection systems are developed based on a predetermined level of protection. Many variables guide the selection of the level of protection to include cost, and ultimate use. The top elevation of our recommended shore protection design is at 585.00 USGS-MSL (583.60 IGLD). The 100-year Lake Michigan lake level is 584.00 USGS-MSL (582.60 IGLD); the 500-year Lake Michigan lake level is 584.60 USGS-MSL (583.20 IGLD). The freeboard between these static lake levels and the top elevation will accommodate boat wakes, and, to some degree, wave action. While it is unlikely boat wakes will overtop the recommended shore protection, we have made no attempt to quantify the frequency of overtopping by Lake Michigan generated waves. Rather, the shore protection systems are designed to provide a level of protection from damage that may be caused by their overtopping. The level of protection provided is not complete, however. Severe storms will cause damage; periodic maintenance will be required, regardless.

DISCUSSION OF RECOMMENDED ALTERNATIVE

The recommended alternative combines rip rap slopes and steel sheet pile (Figure 5). Steel sheet pile provides for easier access to the water than rip rap slopes, but causes the reflection of boat wakes and waves. Rip rap dissipates wake and wave energy.

In our recommended alternative configuration, steel sheet pile is located on the south side of the channel as a continuation of the present steel sheet pile bulkhead. On the north side, the existing steel sheet pile bulkhead will be extended this summer running generally in the direction of the existing wood bulkhead. The location of the new sheeting will provide protection to the proposed shore pathway, and will enable boat traffic to temporarily tie up to shore. On the south shore, the steel sheet pile extention is approximately 45 feet in length, and would provide a means of boat access to the south beach, out of the flow of channel traffic. Another important feature of the recommended south shore sheet pile is that the bulkhead provides a defined flow path to the channel for Lake Michigan storm waves which break over the beach adjacent to the channel. The steel sheet pile can be designed to withstand the overtopping flows.

In our recommended alternative configuration, rip rap revetments are located on both the north shore and the south shore. On the north side, the rip rap revetment will extend from the steel sheet pile to be installed during Summer 1986, and run easterly approximately 170 feet. On the south side, the rip revetment will extend from the recommended steel sheet pile extention, and run easterly approximately 185 feet. We have recommended rip rap revetment rather than steel sheet pile because of the ability of rip rap to attenuate waves reaching the basin. We have recommended rip rap revetment rather than gabion revetment because rip rap is less susceptable to vandalism and requires less maintenance. Alternate materials for the south shore are discussed in the next Section.

Rubble mound seawalls running parallel to the Lake Michigan coast from the dunes to the channel were considered. Seawalls in these locations would be positioned to stop the cross-beach storm waves, eliminating the potential for attack from

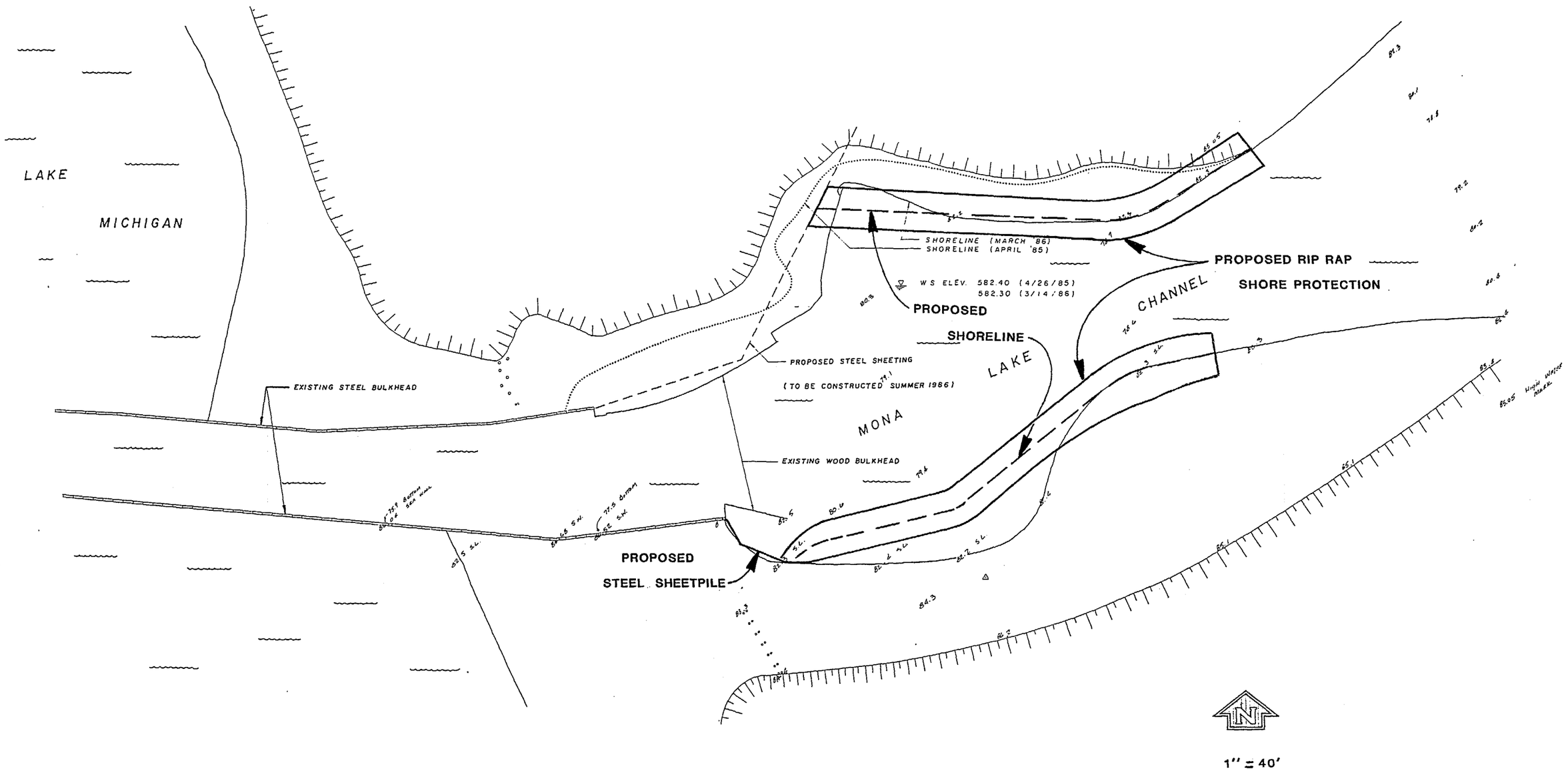

JOHNSON & ANDERSON, INC. 12427-00 APRIL 1986	CITY OF NORTON SHORES MONA LAKE CHANNEL ENTRANCE SHORELINE REVETMENT	RECOMMENDED ALTERNATIVE FIGURE 5

behind of the shore protection in the landward channel. We chose, rather, to accommodate this flow by allowing it to overtop the proposed steel sheet pile wall and re-enter the channel. Although the recommended design will necessitate the occasional replacement of beach sand, the seawalls would be providing a redundant design to accommodate the overtopping storm waves. If overtopping of the beach becomes more frequent with resulting loss of beach sand, then the addition of the seawalls may be a project for future consideration.

We have prepared a preliminary cost estimate for the recommended alternative. In developing this estimate, we used the bid results for the Beach Access Walkway as a guide and have checked with several contractors for updated prices. The bids of the Beach Access Walkway project demonstrated that construction access to the site is an extremely significant factor in the overall costs. Another factor which will effect the bid cost of this project is the amount of marine contracting work available; with the high lake levels, contractors will be busy. We have attempted to reflect these factors in our estimate. We suggest that the City attempt to negotiate with the south bank property owner for a temporary construction easement to minimize the costs of construction access to the site.

Our preliminary cost estimate for the recommended alternative is:

$39,370.00 for the north bank of the Mona Lake Channel.
$60,200.00 for the south bank of the Mona Lake Channel.

A breakdown of the estimate follows.

MONA LAKE CHANNEL ENTRANCE
SHORELINE REVETMENT

PRELIMINARY COST ESTIMATE

I. NORTH SHORE:

(A) Rip Rap Shore Protection extending from proposed steel sheet pile, easterly approximately 170 feet.

(1)	Geotextile	$455yd^2$ @ $\$3.50/yd^2$	$ 1,593.00
(2)	Mattress Stone (8"-12") 140 Tons @ $45/Ton		$ 6,300.00
(3)	Cover Stone (150#-300#) 230 Tons @ $90/Ton		$20,700.00

(B) Sand fill behind shore protection, and grading necessary to prepare slope for rip rap protection. Sand will be dredged from entrance channel as necessary.

$290yd^3$ @ $\$10/yd^3$	$ 2,900.00
	$31,493.00
Contingencies @ 25%	$ 7,877.00
	$39,370.00

MONA LAKE CHANNEL ENTRANCE
SHORELINE REVETMENT

PRELIMINARY COST ESTIMATE (CONT).

II. SOUTH SHORE (Steel sheet pile and rip rap alternate)

(A) Steel Sheet Pile extending from existing channel steel sheet pile easterly approximately 45 feet.

(1)	Steel Sheet Pile @ $180/Ft	$ 8,100.00
(2)	Geotextile 35yd^2 @ $3.50/yd^2	123.00
(3)	Dredge 50yd^3 @ $10/yd^3	500.00

(B) Rip Rap Shore Protection extending from steel sheet pile (above) easterly approximately 185 feet.

(1)	Geotextile 495yd^2 @ $3.50/yd^2	$ 1,733.00
(2)	Mattress Stone (8"-12") 145 Tons @ $45/Ton	$ 6,525.00
(3)	Cover Stone (150#-300#) 320 Tons @ $90/Ton	$28,800.00
(4)	Sand Fill Behind Shore protection, and necessary grading. Sand will be dredged from entrance channel as required. 235yd^3 @ $10/yd^3	$ 2,350.00
		$48,131.00
	Contingencies @ 25%	$12,069.00
		$60,200.00

PHASED AND ALTERNATE CONSTRUCTION

The recommended alternative can be implemented in its entirety, or in phases. Although we have described specific uses of materials, rip rap and steel sheet pile can be used interchangably in certain areas (Figure 6). The purpose of this section is to discuss phased construction and the use of alternate materials.

We recommend that the shore protection system for the north shore be constructed before that of the south shore and that rock be used with no steel sheet pile alternate. We recommend that construction begin with the north bank for three reasons: the land is public property; the dune on the north side is experiencing the most severe erosion; and, the preliminary cost estimate is within the amount of the Coastal Zone Grant. We do not recommend that a steel sheet pile alternate in addition to that to be constructed in Summer 1986, be constructed on the north shore prior to the construction of south bank shore protection. If steel sheet piling were constructed on the north bank, boat wakes and waves would be reflected back to the south shore accellerating its erosion.

We have recommended a combination of steel sheet pile and rip rap for shore protection of the south bank. We recommend that this segment be undertaken as the second phase of construction, and that it be constructed in its entirety. We have recommended approximately 185 feet of rip rap slope; steel sheet pile could be substituted for a segment of the rip rap for all but 90 feet of the shore line. We recommend that the design of the most easterly section of the south bank remain as rip rap because it is better able to attenuate any large waves entering the channel directly from the lake. A cost estimate for this alternate follows.

Construction plans and specifications could be prepared to allow for alternate bids.

MONA LAKE CHANNEL ENTRANCE
SHORELINE REVETMENT

PRELIMINARY COST ESTIMATE

SOUTH SHORE (Alternate Construction)

(A) Steel Sheet Pile extending from existing channel steel sheet pile easterly approximately 140 feet.

(1)	Steel Sheet Pile @ $180/Ft	$25,200.00
(2)	Geotextile 110yd^2 @ $3.50/yd^2	385.00
(3)	Dredge 525yd^3 @ $10/yd^3	5,250.00

(B) Rip Rap Shore Protection extending from steel sheet pile (above) easterly approximately 90 feet.

(1)	Geotextile 240yd^2 @ $3.50/yd^2	$ 840.00
(2)	Mattress Stone (8"-12") 70 Tons @ $45/Ton	$ 3,150.00
(3)	Cover Stone (150#-300#) 156 Tons @ $90/Ton	$14,040.00
(4)	Sand Fill Behind Shore protection, and necessary grading. Sand will be dredged from entrance channel as required. 100yd^3 @ $10/yd^3	$ 1,000.00

Subtotal	$49,865.00
Contingencies @ 25%	$12,465.00
Total	$62,330.00

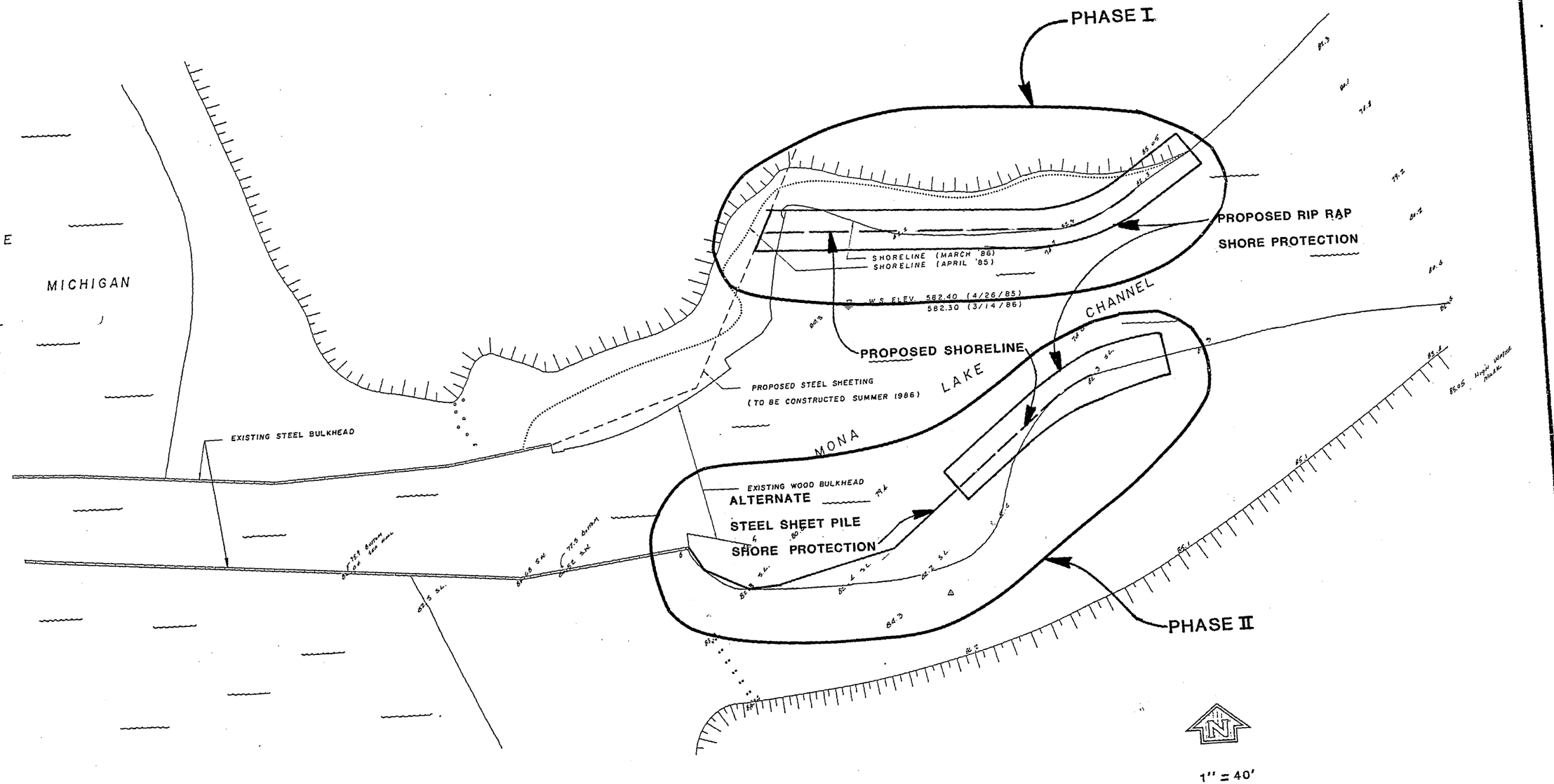

JOHNSON & ANDERSON, INC. 12427-00 APRIL 1986	CITY OF NORTON SHORES MONA LAKE CHANNEL ENTRANCE SHORELINE REVETMENT	PHASED & ALTERNATE CONSTRUCTION FIGURE 6