Construction and Operations Manual for a Tidal-Powered Upwelling Nursery System

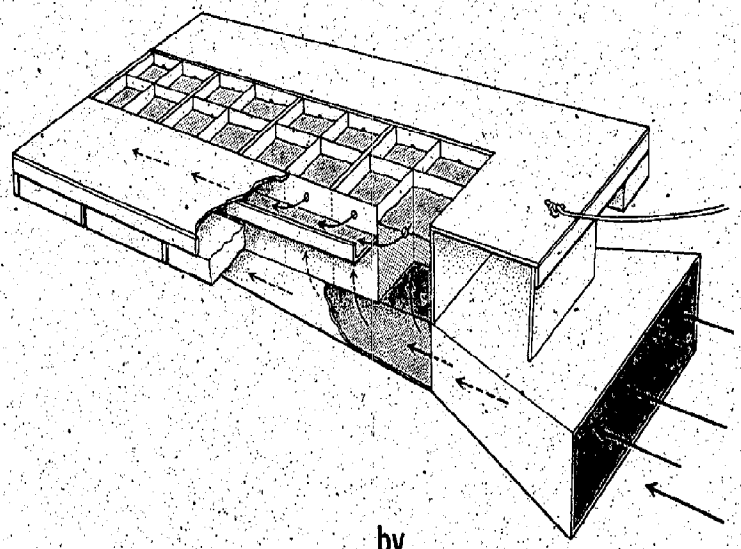

by

Robert B. Baldwin
William Mook
Nancy H. Hadley
Raymond J. Rhodes
M. Richard DeVoe

SH370
.B35
C66
1995
c.2

April 1995

This manual is the result of work sponsored by the National Coastal Resources Research and Development Institute, pursuant to NOAA contract number AQ66.90-5628-03. The views expressed herein are those of the author(s) and do not necessarily reflect the views of NOAA or any of its sub-agencies.

Construction and Operations Manual for a Tidal-Powered Upwelling Nursery System

by

Robert B. Baldwin
Lowcountry Seafood, Inc.
McClellanville, S.C.

William Mook
Mook Sea Farm, Inc.
Damariscotta, ME

Nancy H. Hadley
Marine Resources Research Institute
S.C. Department of Natural Resources

Raymond J. Rhodes
Office of Fisheries Management
S.C. Department of Natural Resources

M. Richard DeVoe
S.C. Sea Grant Consortium

Property of CSC Library

US Department of Commerce
NOAA Co[illegible] Services Center Library
2234 South[illegible]ion Avenue
Charleston, SC 29405-2413

SH370 .B35 C[illegible]

APR 14 1997

TABLE OF CONTENTS

Introduction 1

Background
The Tidal Upweller System
Site Selection
Permitting

Construction Requirements for the Upweller 7

Introduction
Step-by-Step Construction Instructions
(illustrated)

Operation of the Tidal Upweller 29

Flow Rates
Stocking Densities
Maintenance Requirements
Thinning and Sorting
Carrying Capacity
Labor Requirements

Cost Considerations 39

Costs of Materials and Construction
Operating Costs
Relative Cost Savings

Literature Cited and Further Reading 43

Acknowledgments 44

CONSTRUCTION AND OPERATIONS MANUAL

FOR A

TIDAL-POWERED UPWELLING NURSERY SYSTEM

INTRODUCTION

Background

Commercial fishermen in South Carolina and the Southeastern United States have traditionally varied their fisheries, harvesting finfish, shrimp, clams and oysters depending on the season and market. Legislation banning or restricting the use of certain gear types and designating sea trout and spottail bass as sportfish only has, in effect, ended the inshore commercial fishery in this region. The continuing decline in the ex-vessel price of shrimp and the increase in operating costs of a shrimp boat are forcing many shrimpers to look for alternatives. Some shrimpers who lost their boats in Hurricane Hugo are scaling down their operations and putting more emphasis on the clam and oyster part of their harvest. A number of fishermen are beginning to diversify their operations by entering the shellfishing industry, with some interested in establishing clam or oyster aquaculture operations.

The potential for shellfish aquaculture in the southeast is promising. In general, wild clam populations have been declining for several years, while market price and, as a result, harvest pressure have been increasing. As clam populations decrease, less broodstock is left to reproduce and the downward trend in landings is reinforced. Areas that have been heavily harvested take years to recover and, because of constant fishing pressure, may never regain their original densities.

Aquaculture is being advocated to bolster wild harvests. Hatcheries are able to produce seed clams at any time and in large quantities. However, the small seed produced by the hatchery cannot be planted in the field until it has grown large enough (to 8-10 mm) to survive (Manzi and Whetstone 1981). The early nurseries were simply land-based raceways through which filtered seawater was pumped. When land-based upwelling systems were developed,

more clams were raised in a smaller area (Manzi et al. 1984, Manzi and Castagna 1989). A typical upweller consists of a piece of plastic pipe 8" - 24" in diameter with a screen on the bottom. The clams are placed in the screen and the water flows up through the screen, passing through the clam mass, and exits through an outlet at the top. The clams remove food from the water as it passes through. Most hatcheries use filtered, sterilized water and then raise their own algae to feed the larval and post-set clams. However, as clams grow they require more food than is practical to grow, so a land-based nursery system is dependent upon large volumes of good quality, food-rich water (Castagna and Kraeuter 1981).

Conventional land-based nursery systems must compete with residential and commercial uses for expensive waterfront property . Besides the high land cost, conventional land-based nurseries require pumps and electricity to move the large volumes of water the clams require, and backup systems in case of mechanical or electrical failure. If the water quality should change due to pollution or low salinity, the nursery cannot be easily moved. Although hatchery seed is relatively inexpensive ($3-5 per 1000), the capital intensive nature of a land-based nursery makes plantable seed much more expensive ($20-50 per 1000).

Several alternatives to land-based nurseries are in use in various southeastern states. In Virginia and North Carolina, bottom nurseries are sometimes employed. These may consist of trays filled with sand or other substrate and placed in protected waters. Alternatively, seed may be broadcast directly on the bottom and covered with various devices to exclude predators. In Florida, regulations limit bottom culture to low-profile structures (6 inches maximum height above substrate). There, soft cages made of nylon mesh are used as bottom nurseries. In South Carolina, survival of small seed in bottom plants of these types is poor, due to heavy mortalities from natural predators and the heavy load of fine silt which may totally cover the cages in a few days, smothering the clams. Cages raised slightly off the bottom have been successfully used, but require continuous, labor-intensive maintenance to control siltation and fouling. These cages have the additional drawback of being cumbersome to deploy and harvest. Because flow through such cages is greatly reduced by the small mesh size needed to retain seed clams, they can only be stocked at very low densities. Thus a considerable number of cages and a large bottom area are required to raise even a modest quantity of 8-10 mm seed.

The Tidal Upweller System

One alternative to land-based or bottom nurseries for hard clams is the tidal-powered upweller nursery system. Such a system has been designed and successfully tested in Maine (Mook and Johnson 1988). Both the capital cost and operating cost of such a system are lower than a land-based system. It does not require expensive land, pumps, electricity or algae, and it can be moved easily if water quality or land uses change. A tidal-powered system is significantly less expensive to construct than a land-based system, but provides many of the same advantages, including predator protection and rapid, uniform seed growth. In comparison to a bottom nursery, a floating system is easier to maintain. Upwelling systems require less

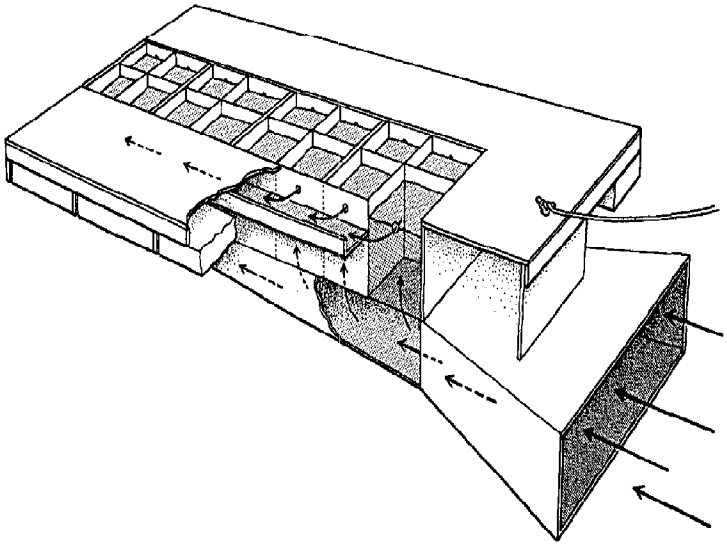

Fig. 1 - Three-dimensional schematic of the Tidal-Powered Upwelling Nursery System.

area than bottom trays to maintain the same number of seed. They can be inspected at any tide and the stocking and harvest of seed is accomplished by exchanging removal subunits (bins). Such a system appears to offer a very attractive nursery alternative for shellfish producers.

The tidal-powered upwelling system described in this manual is essentially a large tank supported in the center of a floating raft which doubles as a work platform (Fig. 1). The tank houses upwelling bins similar to those used in land-based upwelling nurseries. The floating raft has a large scoop on one end which traps tidally driven water and directs it into the upwelling tank. The water rises through the individual bins and exits out through drains located below the water line. The drains flow into exit troughs

which direct the water out the rear of the structure. The entire raft is moored from the scoop end to a single anchor, which allows the raft to pivot with the tide so that the scoop always points into the current.

The pilot system which has been built and tested in South Carolina has the following dimensions:

Raft length:	20 ft
Raft width:	12 ft
Tank length:	16 ft
Tank width:	4 ft
Tank depth:	38 ft (scoop end); 2 ft (back end)
Scoop dimensions:	Inner: 8 ft w x 30 inches h
Bin dimensions:	19 inches x 19 inches x 18 inches deep
Capacity:	16 bins
Mooring radius:	100 ft (in 21 ft of water)

Site Selection

As with any aquaculture operation, the most critical decision to be made in the use of the tidal-powered upweller system is the selection of an appropriate site. Fortunately, with the tidal system, the decision is revocable. If a site turns out not to be suitable, the system can be moved to a new location (assuming permitting restrictions will allow).

Factors that must be considered in siting the tidal-powered upweller are water currents, salinity range, depth and width of the creek, water quality (pollution factors), exposure to wave action, and potential for navigational interference. State agencies, such as the Department of Natural Resources in South Carolina, can provide assistance in determining suitability of potential sites.

Since the upwelling system is powered by tidal currents, it is imperative to select a site with adequate flow. Based on operation of the prototype, we believe that an average current of 0.5 knots will be adequate to operate the system, although faster currents are desirable. Current speeds will be different for each site and also vary over the daily tidal cycle as well as on a more seasonal basis. Over a tidal cycle, the current averages about 0.5 knots if the maximum current approaches 0.9 knots. Current tables, published annually by NOAA, are usually available from nautical supply stores which carry navigational charts. They may also be ordered from:

NOAA Distribution Branch
6501 Lafayette Ave.
Riverdale, MD 20737
(301)436-6990

These tables show time and speed of maximum and minimum currents for many locations, but will probably not contain your precise site. However, they will provide an indication of the likelihood that adequate currents are available in your vicinity. The chapter on Operation of the Upweller contains details on determining current speeds at a proposed site.

Hard clams require high salinity (>25 ppt). Occasional short spells of lower salinity (down to 20 ppt) are only slightly deleterious, but prolonged salinity below 25 ppt will reduce growth rates, and frequent or prolonged salinity below 20 ppt may result in mortality. It is important to know the seasonal salinity variation at your proposed site, and particularly the salinity changes to be expected in event of heavy rainfall.

The tidal upweller system, as described, draws 5 to 6 feet of water, which is obviously the minimum depth required. However, it is desirable to have several feet between the upweller and the creek bottom at low tide, particularly if the creek bottom is muddy. Otherwise the system may be subject to heavy siltation and require more frequent cleaning. The system is designed to pivot around a single fixed mooring. The site must allow room for this rotation.

As with any aquaculture operation, water quality is a prime consideration. Avoid sites which may be impacted by industrial activities, agricultural runoff, frequent boat traffic, and other potential sources of contaminants. State natural resource agencies can usually assist in identifying the potential for pollution problems at a proposed site.

The tidal upweller system can tolerate moderate wave action, and in fact this is one of its advantages, since the wave action reduces silt accumulation in the system. However, sites which may be exposed to waves of 1 to 1.5 feet should probably be avoided. The prototype system was torn from its mooring by wave action in a major storm.

Finally, the tidal upweller must <u>not</u> create a navigational hazard. Selecting a broad enough creek to moor the upweller is critical. Ideally, the tidal upweller system should have room to rotate on its mooring without entering the main channel. The system must be

adequately marked with lights to prevent night-time collisions. Selecting a site which is not subject to heavy boat traffic reduces this risk.

Permitting

The tidal-powered upweller nursery system is a floating unit and will likely require a series of federal and state permits prior to deployment. Contact should be made with the local district office of the U.S. Army Corps of Engineers and the state coastal zone management agency and/or fish and game agency for permit requirements and limitations. Not all states have developed regulatory frameworks for the use or lease of the water column in coastal areas; it is therefore recommended that the relevant agencies be contacted before an investment is made in the purchase, construction and deployment of the unit.

CONSTRUCTION REQUIREMENTS FOR THE UPWELLER

Introduction

Construction of the tidal-powered upwelling nursery system may take anywhere from 200 to 250 hours to complete and will require two persons. However, additional time should be added to this estimate if the builders are not familiar with floating raft structures.

A variety of wood and hardware will have to be obtained before construction begins. Table 1 lists the types and quantities of materials necessary to construct the upweller, along with unit costs (in early 1994 dollars).

Tools necessary for construction of the tidal upweller include a power (circular) saw, a 3/8" or 1/2" power drill, hole saw for the power drill, hammer, pry bar, square, level, tape measure and a paint brush and roller.

As components of the upweller are constructed and completed, they should be painted, especially before assembling the components.

Design specifications and a step-by-step account of construction is presented in the next section.

Step-by-Step Construction Instructions

A. Base Construction

1. Each of the three 22' long 4x4 skids are made by splicing two 12' 4x4s together as shown in Fig. 2a. Use a 2' overlap to make the joint.

2. Place the three skids side by side, mark and notch them as shown in Fig. 2b, to accommodate the 2' x 6' cross pieces. Each notch will be about 1.5" deep and 5.75" wide depending on the actual 2" x 6" dimensions. Note: notches should, starting at one end (which will be the back of the tank), be centered on 4', 8', 12', 16' and 20'. The first notch should have its edge coincide with the end of the 4x4 and the last notch should have its front edge at the 20' mark. Cut a notch 1.5" deep and 3.5" long in the front end of each 4x4 skid to accept the 2' x 4's.

Table 1. Type and Cost of Materials Used in the Construction of a Tidal-Powered Upwelling Nursery for Shellfish in South Carolina*

Quantity	Materials	Unit Cost (1994)	
10	2" x 10" x 12' #2TR	@	11.30
5	2" x 10" x 10' #2TR	@	8.44
3	2" x 10" x 8' #2TR	@	7.83
8	2" x 6" x 12' #2TR	@	6.33
15	2" x 4" x 8' #2TR	@	2.80
12	2" x 4" x 12' #2TR	@	3.73
7	4" x 4" x 12' #2TR	@	8.00
34	5/4" x 6" x 12' TR Decking	@	6.65
12	3/4" x 4' x 8' BC ply TR	@	25.19
16	1/4" x 4' x 8' AC Firply	@	13.57
16	1" x 6" x 10' #1TR	@	5.20
10	1" x 6" x 16' #1TR	@	8.32
4	1" x 6" x 12' #1TR	@	6.24
24	3/8" x 6" galv carriage bolts	@	.50
20	3/8" x 5" galv lag bolts	@	.40
24	3/8" x 5" galv hex bolts	@	.50
4	3/8" x 4" galv lag bolts	@	.49
8	5/16" x 3"galv lag bolts	@	.34
3	3/8" Eye Bolts galv	@	.76
3	5" galv cleats	@	1.55
6	#14 x 3" brass wood screws	@	.50
1 box	20 lb 2" ss nails	@	121.80
1 box	20 lb 3" ss nails	@	119.04
1 box	10 lb 3.5" ss nails	@	60.00
1 box	4 lb 3/4" ss nails	@	36.00
16 feet	3/4" PVC pipe	@	.10/ft
20 feet	3" PVC pipe (Schedule 40)	@	.25/ft
16	3" PVC couplings	@	1.09
1 pack	monel staples	@	7.00
40 feet	20 x 30 mesh fiberglass window screen	@	110.00/100' roll
1	barricade light and batteries	@	22.45
10	dock floats	@	49.50
4	galvanized steel corner brackets	@	11.46
5 gal.	epoxy paint (surplus)	@	5.00/gal
2 gal.	anti-fouling paint (surplus)	@	15.00/gal
12 feet	1/4" x 1.5" plastic lath	@	.15/ft
40 sq ft (5' wide)	1" x 1" plastic coated wire mesh	@	3.00/ft
45 feet	1/4" nylon line	@	.25/ft
1 tube	silicone caulking	@	3.00

* Several of these 1994 cost estimates are based upon surplus prices and/or special discounts. Materials purchased at regular retail prices may be higher than listed.

3. Cut five 2x6s each 49.5" long. Fit the base together with the two outside 4x4s flush on the outside with the ends of the 2x6 cross pieces. The middle skid should be centered on the mid-point of each 2x6. To construct the base for the intake scoop center an 8′ 2x6 in the last 2x6 notch and an 8′ 2x4 in the notches at the end of the 22′ skids. Lay another 2x4 on edge, connecting the front of the 2x6 at the 16′ station with the end of the front 2x4 (See Fig 2c).

Mark the bottom edge of the 2x4 where it crosses the 4x4 skid. When cut on this line, the angled cut side of the 2x4 will fit against the side of the skid. Mark the 2x6 and 2x4 cross pieces on the inside edge of the 2x4 and cut off the ends at that line. The 2x4 is then nailed in place with the top flush with the top of the 4x4, 2x6, and 2x4. Repeat the procedure for the opposite side.

4. Nail the base together with 3.5″ss nails, making sure the skids are perfectly parallel, and square to the cross pieces.

5. Nail a half sheet of 3/4" plywood onto the base, making sure that the end is flush with the first 2x6 cross piece (position #0), and leaving exactly 3/4" from each side of the plywood floor to the outside edge of the 4x4 skid.

6. Finish the tank floor by butting a full sheet of 3/4″ plywood to the first piece, and a full sheet to the second piece leaving, as before, 3/4 inches along each side. Butt a 2′ x 4′ piece of 3/4″ plywood to the last full sheet. Measure and cut 2 triangular pieces of 3/4″ plywood to finish the tank-scoop base. Nail the entire floor to the base with 3″ ss nails.

Fig. 2 - TANK BASE

a) Splice - 4" X 4" (Top View)

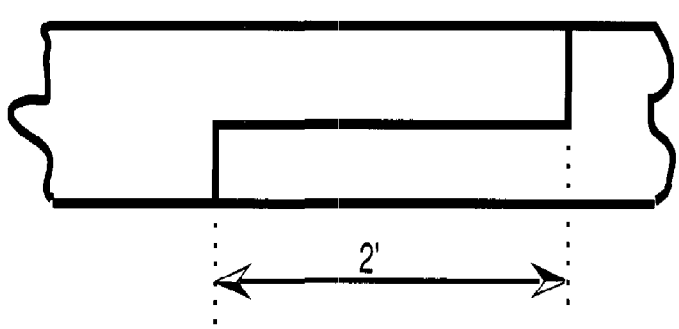

Fig. 2b & 2c - TANK BASE

b) Notching - 4" X 4" (Side View)

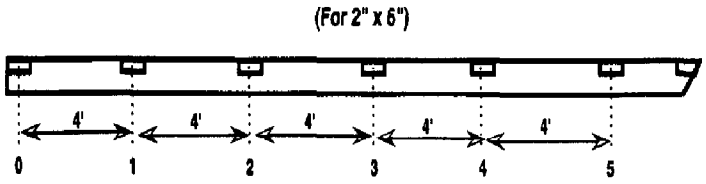

c) Assembled Tank Base

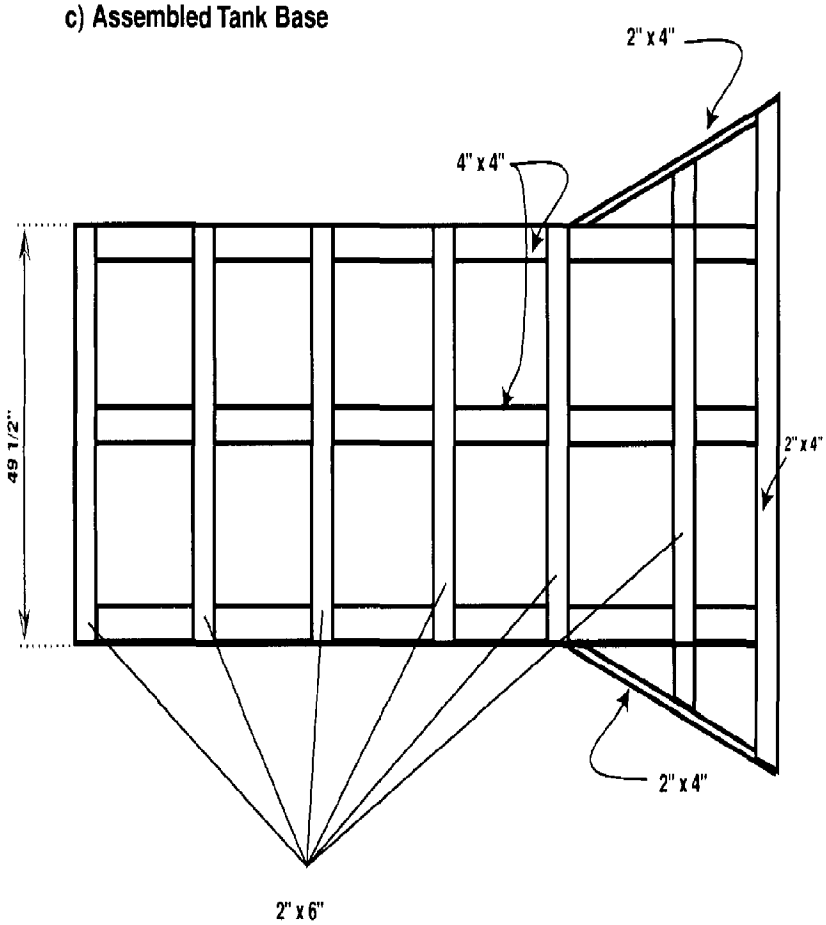

B. Tank Sides

1. Each tank side is made from two full sheets of 3/4" plywood.

2. Make each tank wall as shown in Fig. 3, by laying the pieces out flat, end to end, snapping the "cut" line with chalk, and cutting each section with a circular saw. (The plywood side at the rear (shallow end) of the tank will measure 2′, while the side at the front [deep] end will measure 38″.)

3. Keeping the cut side down, and starting at the rear of the tank, toe nail each wall section to the tank base (2″ss nails) making sure that the outside of the wall is flush with the outside of the skids, and that the inside of the wall is up tight against the plywood floor of the tank. An 8-foot section of tank side should bridge the spliced section of the skids.

4. Gently, lift the front (deep) end of the tank onto small blocking, and then block the rear (shallow) end of the tank even higher so that the top of the tank sides are level from side to side and lengthwise. Be sure to support the base in several places along its length. The level should be checked periodically throughout construction.

C. Scoop Sides

1. Using a piece of 3/4″ plywood long enough to reach from the front edge of the scoop floor to the tank side, bevel the edge to butt against the front edge of the tank side (Fig. 4).

2. Set the plywood in place against the side of the scoop floor. Mark the plywood along the bottom of the 2′ x 4′ side framing of the scoop floor and cut off the section below the 2′ x 4′.

3. Mark the tank edge of the plywood 16″ down from the top of the tank side. Mark the front edge of the plywood 30.5″ up from the scoop floor. Connect the two marks and cut off the top piece. The remaining piece is the scoop side and can be used as a pattern to cut out the opposite side. Remember to reverse the bevel on the edge.

4. Nail the scoop sides to the 2′ x 4′ floor framing. Cut a 2′ x 2′ to fit on the inside top edge of each scoop side and nail flush with the top edge.

Fig. 3 - TANK SIDES

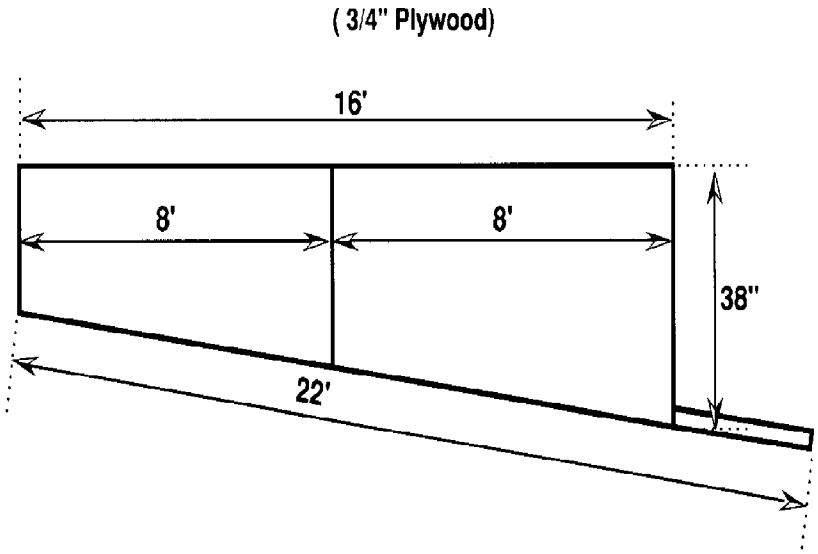

D. Scoop Top (Ceiling)

1. To construct the scoop top, lay a full sheet of 3/4" plywood lengthwise across the scoop sides and butt the side against the front of the tank sides. Making sure the scoop sides are plumb, mark the plywood top along the outside edge of the scoop sides. Cut along the lines and nail the plywood top to the 2' x 2' nailers on the scoop sides (Fig. 5).

2. To finish the scoop top, rip a full sheet of 3/4" plywood in half lengthwise. Lay the 1/2 sheet against the first sheet mark, cut to fit and nail to the 2' x 2' nailers. The front edge should be even with the front edge of the scoop sides.

3. Cut a strip of 3/4" plywood 4" to 6" wide and as long as the joint in the two pieces of the scoop top and nail over the top of the seam.

4. Cut a 2x4 to fit across the front edge of the scoop top and nail to the top of the plywood as a stiffener. Cut and nail two more 2x4 stiffeners to the front outside edge of the scoop sides.

Fig. 4 - RAFT FRAME LAYOUT

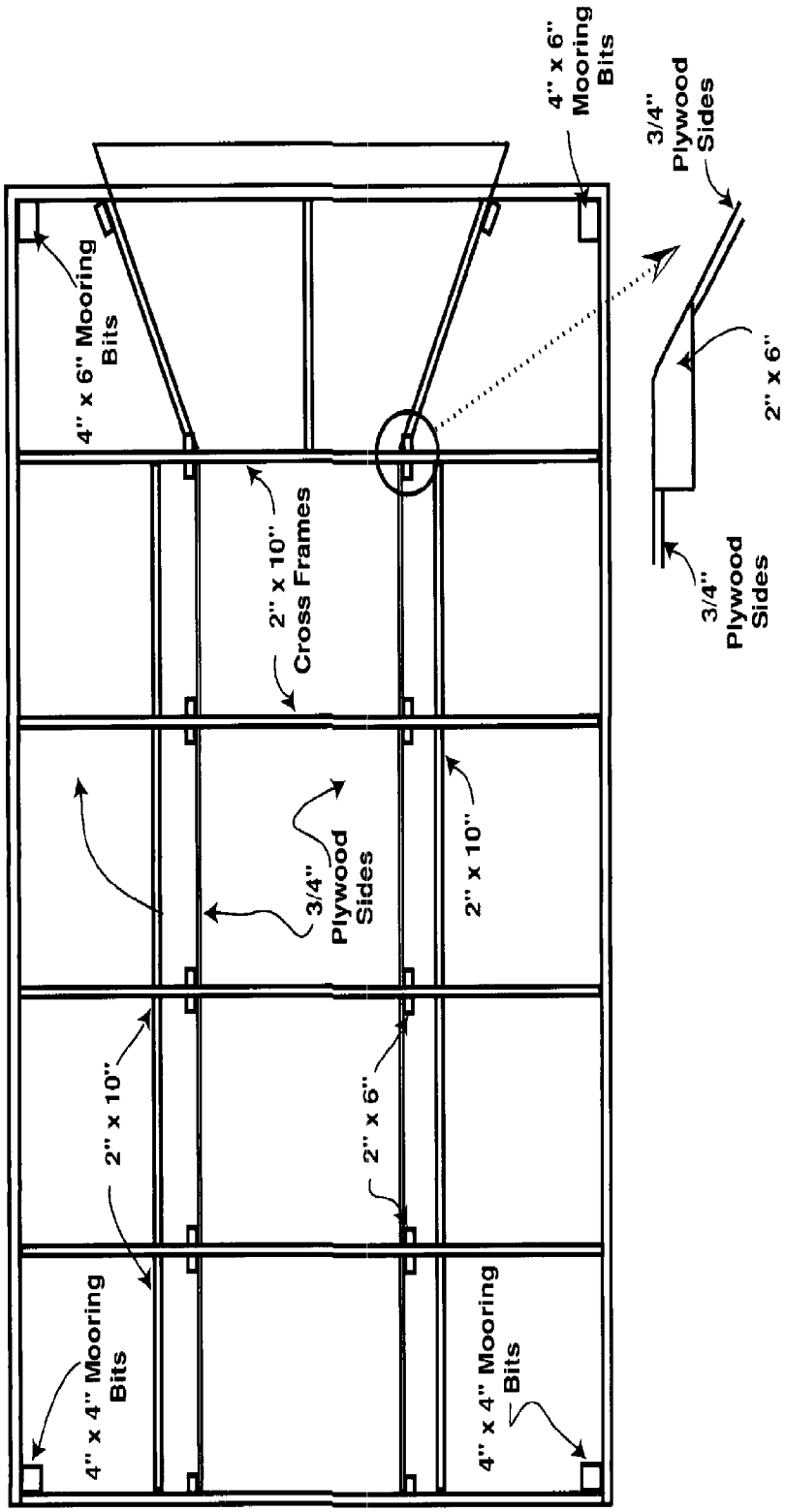

E. Tank Hangers

1. Using Fig. 6a as a guide, tack 2x6 hangers to the sides. The hangers should be plumb, and centered on 4', 8', 12', and 16' from the back edge of the tank sides. (The back and front hangers are not centered on the marks, but are flush with the ends of the tank.)

2. Make each hanger long enough so that 6" extends above the tank side and an inch or so extends below the 4x4 skid. The front edge of the hanger at position 16' should be beveled at an angle to accommodate the sides of the intake scoop (see Fig. 4). The hanger at 20' is located on the scoop side.

3. Drill a 3/8" hole through each hanger and the 4x4 skid behind it and bolt the hangers to the skids with 6" x 3/8" galvanized carriage bolts, nuts, and washers. (The nuts and washers should be on the inside of the skids.)

4. Firmly nail the plywood sides to the hangers. Be sure to place extra nails at the wall joints.

5. Notch the top six inches of each hanger (except at the front and back of the tank) as shown in Fig. 6b. The notches should be centered on the middle of each hanger, about 1.5" wide, and the bottoms should be flush with the top of the tank sides.

6. Trim off the bottom of each hanger so it is flush with the bottom of the 4x4 skid (see Fig. 6c).

7. Brace off the sides of the tank at the front and back so the sides are plumb.

F. Raft Framing

1. Find and mark the midpoint of five, 12' 2x10s, then make marks two feet out from the middle towards each end.

2. Drop each 2x10 into the hanger notches, line up the 2 foot marks with the inside edge of each tank wall, and nail in place through the 2x6s. The 2x10s at each end of the tank are nailed to the outside face of the front and back 2x6 hangers.

3. Drill 3/8" holes through the hangers and 2x10s and bolt with 3/8" x 6" galvanized carriage bolts as shown in Fig. 7a. The 2x10s at each tank end should be lagged into the hangers with 3/8" x 5" lag screws.

Fig. 5 - INTAKE SCOOP & WEED SCREEN SUPPORTS
Side View: Front of Tank

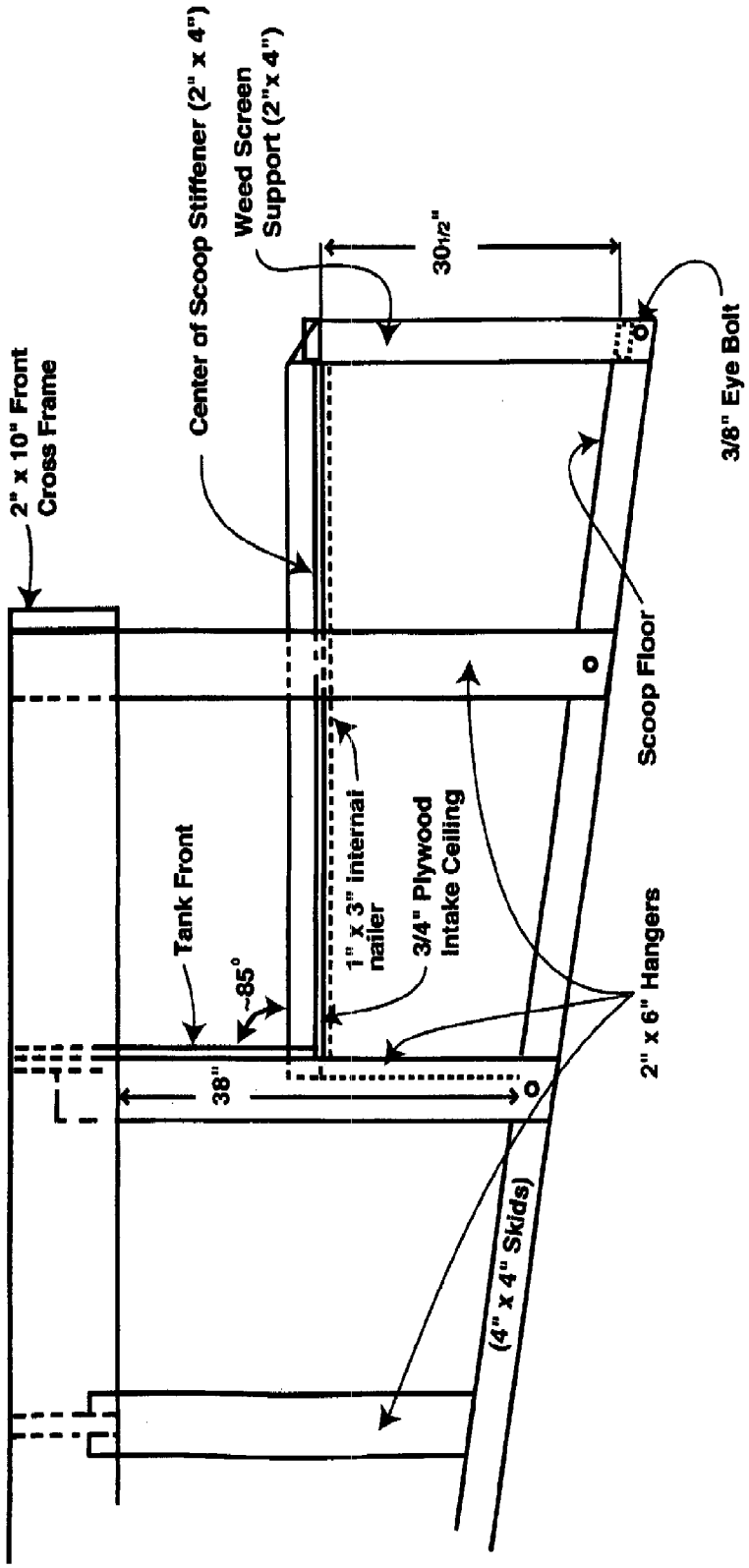

4. For each of the raft sides, splice two 12' 2x10s as shown in Fig. 7b, with 2x10 backing, or butt blocks at least 3 feet long.

5. Trim 1.5" off the ends of all 2x10 cross frames except for the ones at the front and back of the tank. Fasten the side frames to the cross frames (see Fig. 4), nailing into the end grain with 3.5" ss nails and then adding 3/8" x 4" or 5" lag screws. (Before fastening, make sure the cross frames are perpendicular to the side framing.)

6. Reinforce each corner with steel corner brackets.

7. Bolt in 4x4 and 4x6 mooring bits to each corner. These should extend about 8" above the raft decking and be made of oak if possible (see Fig. 4).

8. Measure and cut 2x10s to fit between each cross frame, parallel to the tank. The inside edge of each 2x10 should be on a mark 8" from the outside of the 3/4" tank wall (see Fig. 4). Nail securely in place with 3.5" ss nails.

G. Tank Wall Stiffeners

1. Cut and fit 2x4s to go along the top edge of the tank on the outside of the walls between each pair of 2x6 hangers. Nail these securely in place as shown in Fig. 8a and 8b, flush with the top edge of the 3/4" plywood. After building the upweller raft, the exposed edge of plywood should be carefully sealed or covered to prevent water damage.

H. Outlet Holes

1. Find and mark the midpoint on the tank wall between each 2x10 cross frame (except for in the front tank section). These will be the center marks for lining up the removable bin supports.

2. Find and mark (on the top edge of the tank) the midpoint between the bin support marks and each adjacent 2x10 cross frame. These marks are the center marks for each seed bin station.

3. Using a carpenter's square, mark a point on the inside of the tank wall 7.5" down from each bin station mark.

4. At each of these 16 marks on the tank wall, drill a hole slightly smaller in diameter than a 3" Schedule 40 PVC coupling (slip x slip).

Fig. 6 - TANK HANGARS (2" X 6")

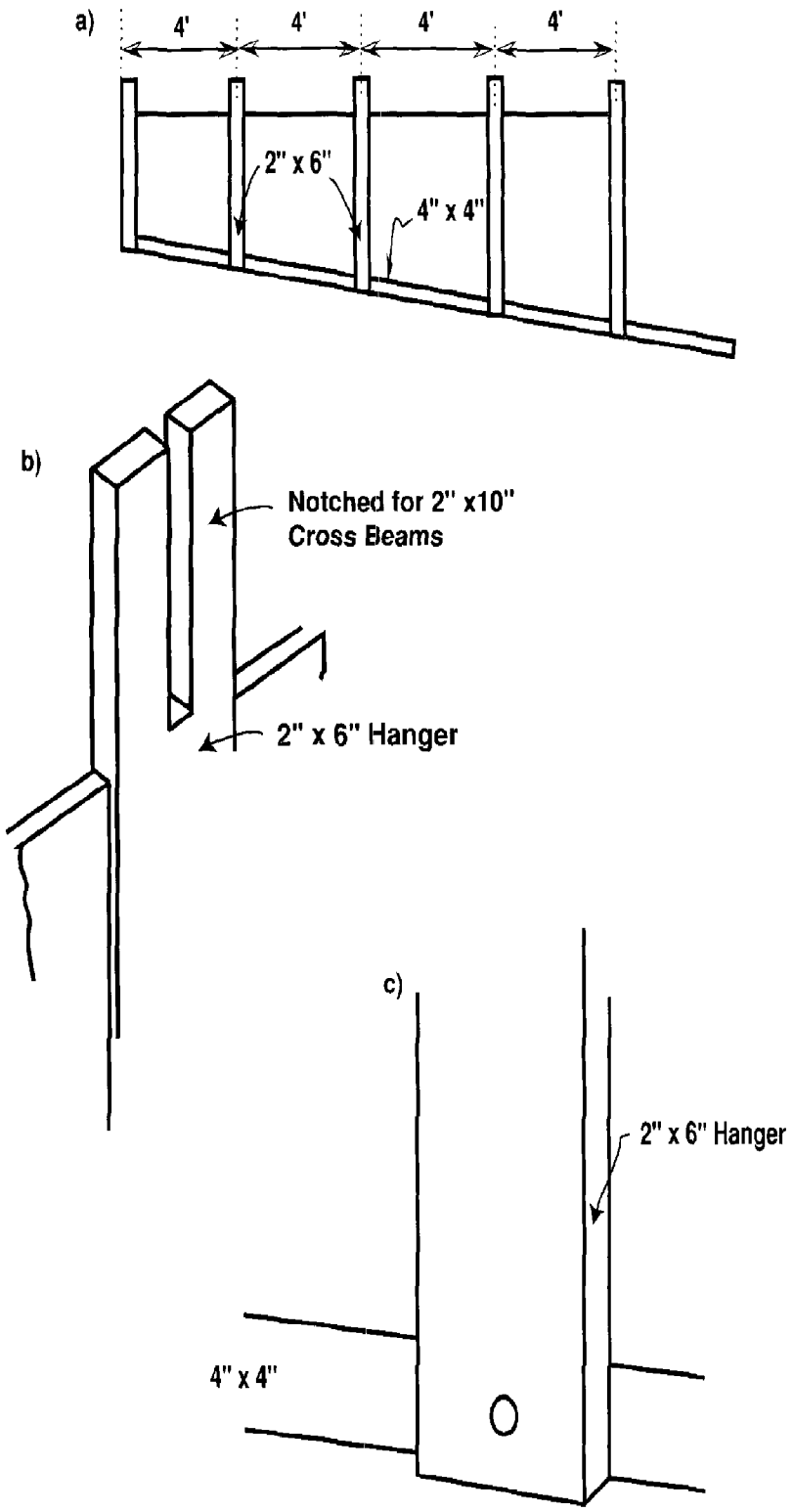

Fig. 7 - RAFT FRAMING

a) 2" x 10" Cross Frame & 2" x 6" Hangars

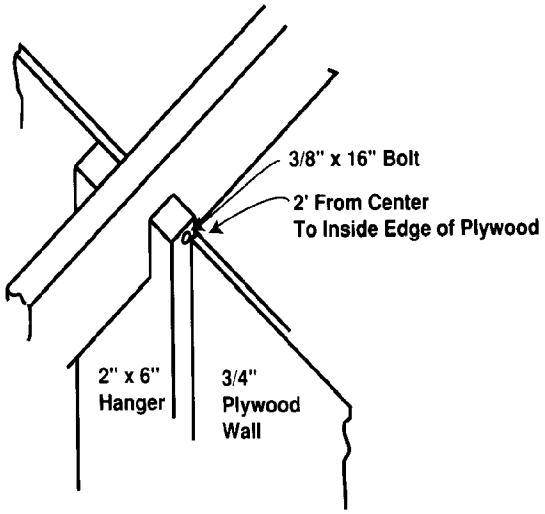

b) 2" x 10" Raft Side - Splice

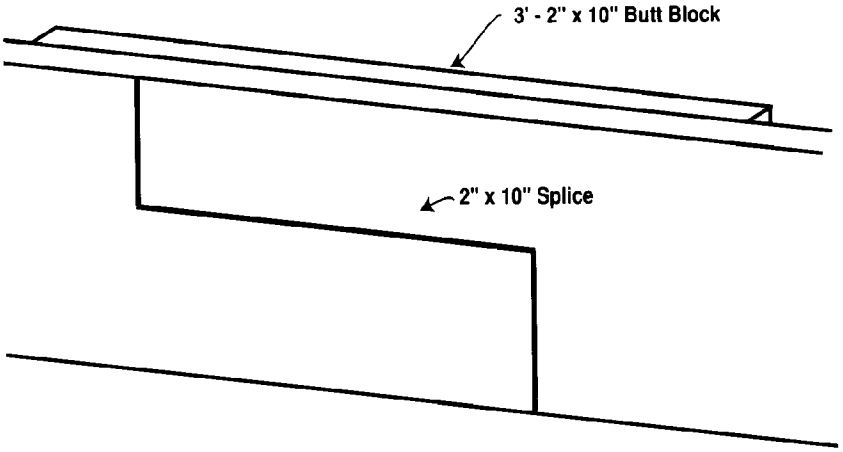

Fig. 8 - TANK TOP STIFFENERS

a) Side View

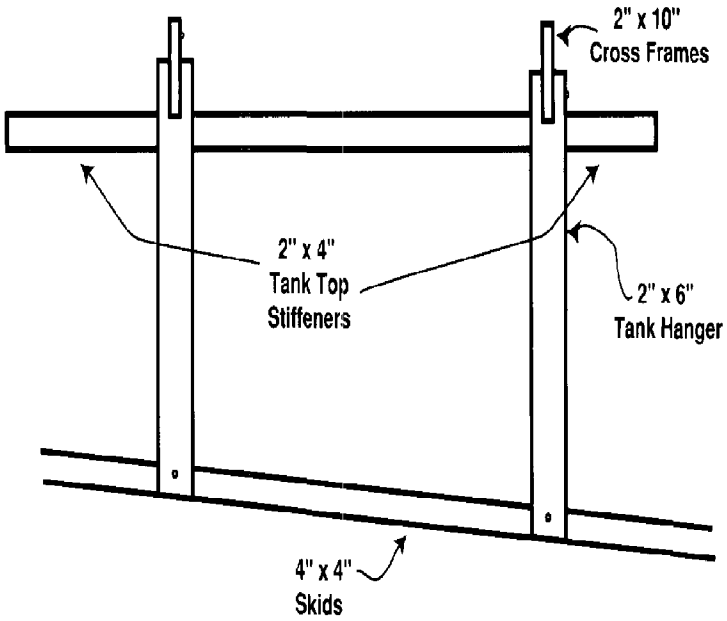

b) Cross Section:

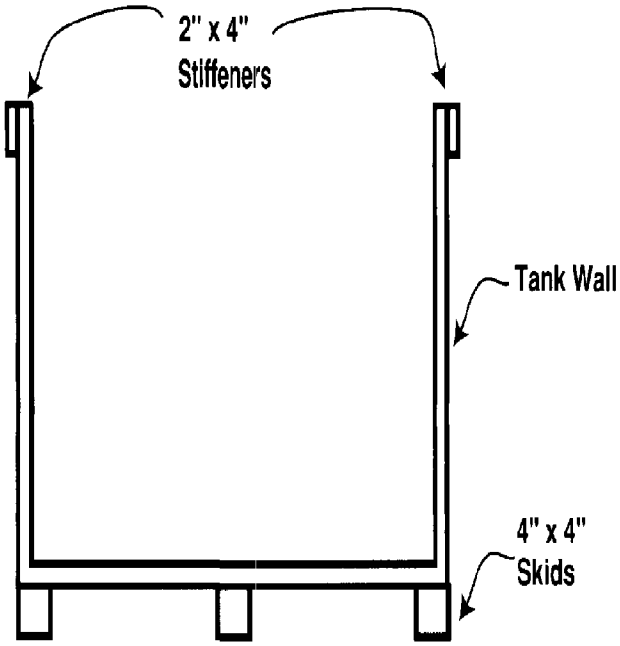

Ream each hole until the couplings can be pounded in place with a block of wood (see Fig. 9).

I. Bin Supports

1. Measure the tank width from the outside of the tank top stiffeners. This should be 52.5". Cut 4 2x4s to this length.

2. Make a 2.25" long by 2.5" deep notch at each end of the 2x4s. The bin supports will fit across the tank, so that the top surface will be 1" above the top of the tank (Fig. 10).

3. Each of the 2x4 bin supports should be drilled and lagged into the 2x4 tank top stiffeners with 5/16" x 3" lag bolts. These can be removed as desired, while building the raft.

J. Exit Trough Construction

1. Nail 1" x 3" spruce (or pine) strapping (ripped from 1" x 6") to the sides of the tank between the 2x6 hangers, with its top edge on a line marked 10.25" down from the top edge of the tank.

2. Cut four strips of 1/4" plywood, 8" wide x 8' long.

3. Assemble the two trough bottoms as shown in Fig. 11a. Nail (with 2" ss nails) a 10' length of strapping to the underside edge of two of the plywood strips, and complete with a 6' piece of strapping.

4. Nail 1" x 3" strapping to the underside of the 2x10s which run parallel to the tank. The strapping should be offset 1/4" from the inside of these 2x10s so that the trough wall (1/4" plywood) will be flush with the inside face of the 2x10 framing (Fig. 11b).

5. Hold the 16' long trough bottom up along the outside of the tank. The back end of the trough should be even with the back edge of the tank. Mark the inside edge of the trough bottom (the edge not reinforced with strapping) for the 2x6 hangers, and cut out notches for the hangers so that the 1/4" plywood fits up against the side of the tank on top of the 1" x 3" strapping (Fig. 11b). Nail the trough bottom to the top of the strapping.

6. Cut trough sides from 1/4" plywood: four sections, each 11" x 8'.

7. Nail these to the inside edge of the strapping beneath the 2x10s, and to the strapping on the underside of the trough bottom (Fig. 11b).

Fig. 9 - OUTLET HOLE LOCATION (Side View)

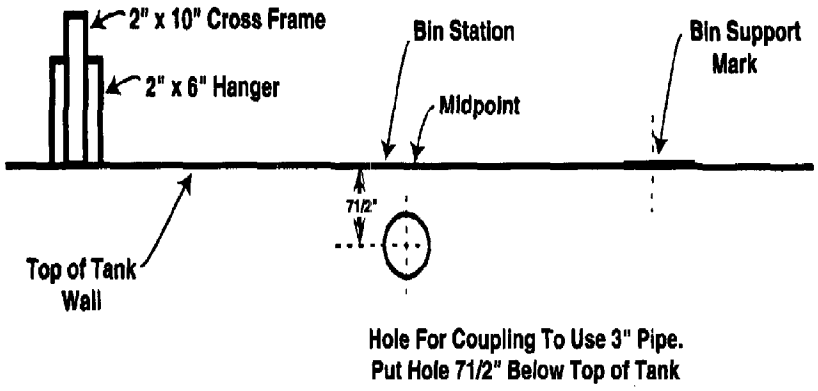

Fig. 10 - BIN SUPPORTS

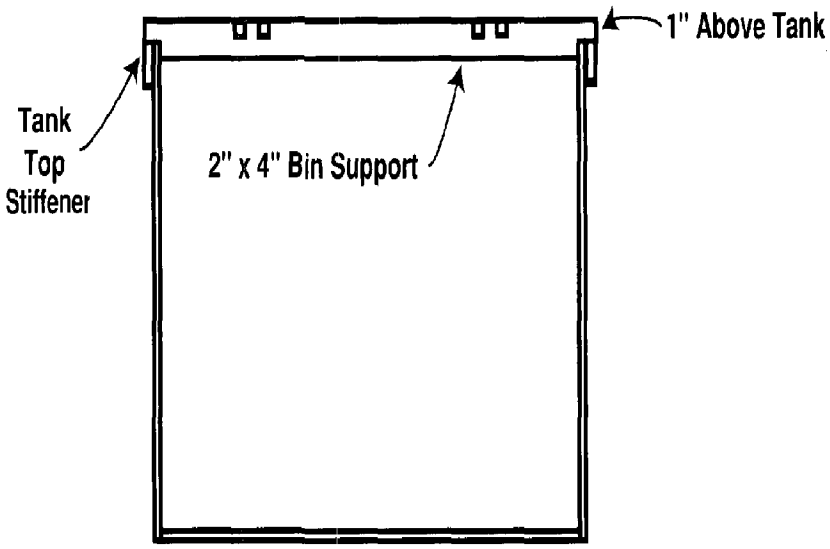

Fig. 11 - TROUGH CONSTRUCTION

a) Trough Bottom Layout:

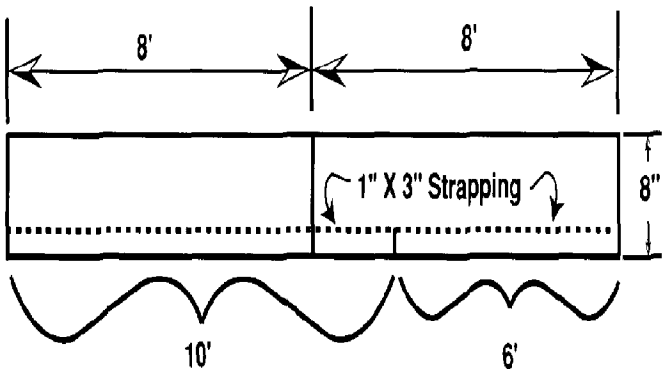

b) Trough Cross Section:

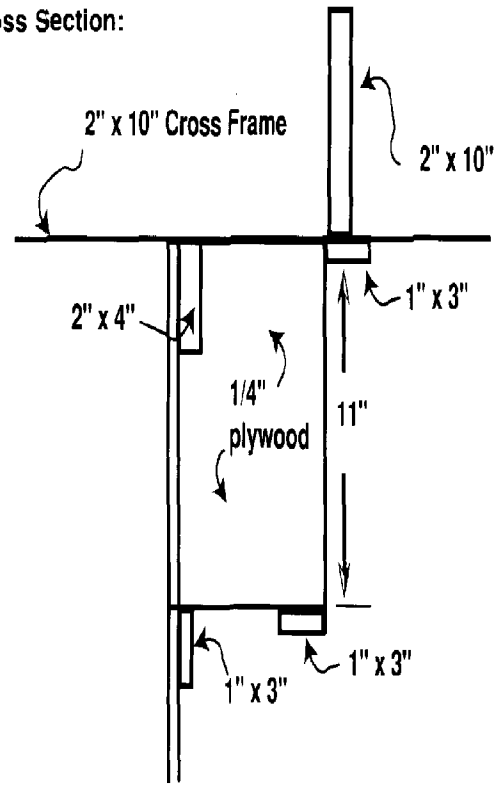

8. Cut off the front end of the trough at a 40° angle, frame the end with strapping and nail on an end piece (1/4" plywood) to block off the front end of each trough.

K. Tank Front and Back Walls

1. For the back wall of the tank, cut out a piece of 3/4" plywood 24" wide by 52.5" long. Secure this to the 2x6 hangers along each side with 3.5" ss nails.

2. For the front of the tank, cut out a piece of 3/4" plywood 16" x 52.5" and fasten it with nails and lag screws to the front of the tank. For both the front and back of the tank the top edge of the plywood should fit snugly under the front and back 2x10 cross frames.

L. Weed Screen Supports

1. Using a bevel gauge to measure the angle, make a template and then cut three weed screen supports from 5/4" x 6" (or 2x4) stock as shown in Fig. 5. Nail these securely in place, centered on each skid. Nail 2 2x4 uprights to the front cross frame centered over the 4x4 studs. Cut a 2x4 72" long for a center longitudinal stiffener for the intake scoop (Fig. 12 & see Fig. 5).

3. Drill 3/8" holes through the side of each skid and install eye bolts 1" from the leading edge of each skid (see Fig. 5).

M. Weed Screen Installation

1. Using hog rings or "J" clips and 1" x 1" vinyl coated lobster trap wire, fabricate a screen 8' x 5'.

2. Fasten an 8' length of 3/4" PVC pipe to the top and bottom.

3. Holding the screen, centered, on the front of the weed screen supports, tie a 15 foot length of 1/4" nylon line to the pipe at the bottom of the weed screen at a point corresponding to each of the three eye bolts.

4. Pass one end of the line through each eye bolt, snugging the pipe down to the tank skids. When the raft is operating, the line will run in front of the screen to deck cleats.

N. Flotation

The prototype used 10 22.5″ x 48″ x 13″ plastic dock floats with 480 lbs. of flotation. Other flotation can be used. Whatever flotation material is used, it must be evenly distributed and fastened securely up within the 2x10 raft framing. The exact location of the raft's waterline is not critical as long as the outlet holes and the discharge troughs are submerged.

O. Decking

1. The decking materials is 5/4" x 6" pressure treated wood.

2. Additional support (2x4s) for decking can be added as needed, depending on type and means of securing flotation.

3. Run a length of decking or 2x6 along the length of the tank over each outlet trough.

P. Bin Construction

1. Figs. 13a and 13b show the top and front view of a bin.

2. For 16 bins cut: 32 18" x 19" and 32 18" x '19.5" pieces of 1/4" plywood; and, 64 21" and 64 19.5" pieces of 1" x 3" strapping. Assemble as shown in Figs. 13a and 13b, using corner brackets to stiffen the corners and 3/4″stainless steel nails to attach the strapping to the plywood.

3. Measure the distance between the top and bottom pieces of strapping on the outside of the bin, cut and nail in place 1" x 6" backing for drilling the outlet holes.

4. Mark for the outlet holes, 7.5" down from the center of the top edge, and drill for 3" Schedule 40 PVC pipe. This should be a tight fit.

5. Stretch screening over the bottom of each bin, and staple it to the 1" x 3" reinforcement. Run a bead of silicone around the bottom edge, and batten down the screening with ripped 5/4" stock about 1/4" thick, cut to the appropriate lengths, and 3/4″ stainless steel nails.

6. Silicone the inside corners of each bin.

Fig. 12 - INTAKE SCOOP & WEED SCREEN SUPPORTS
(Top View: Front of Tank)

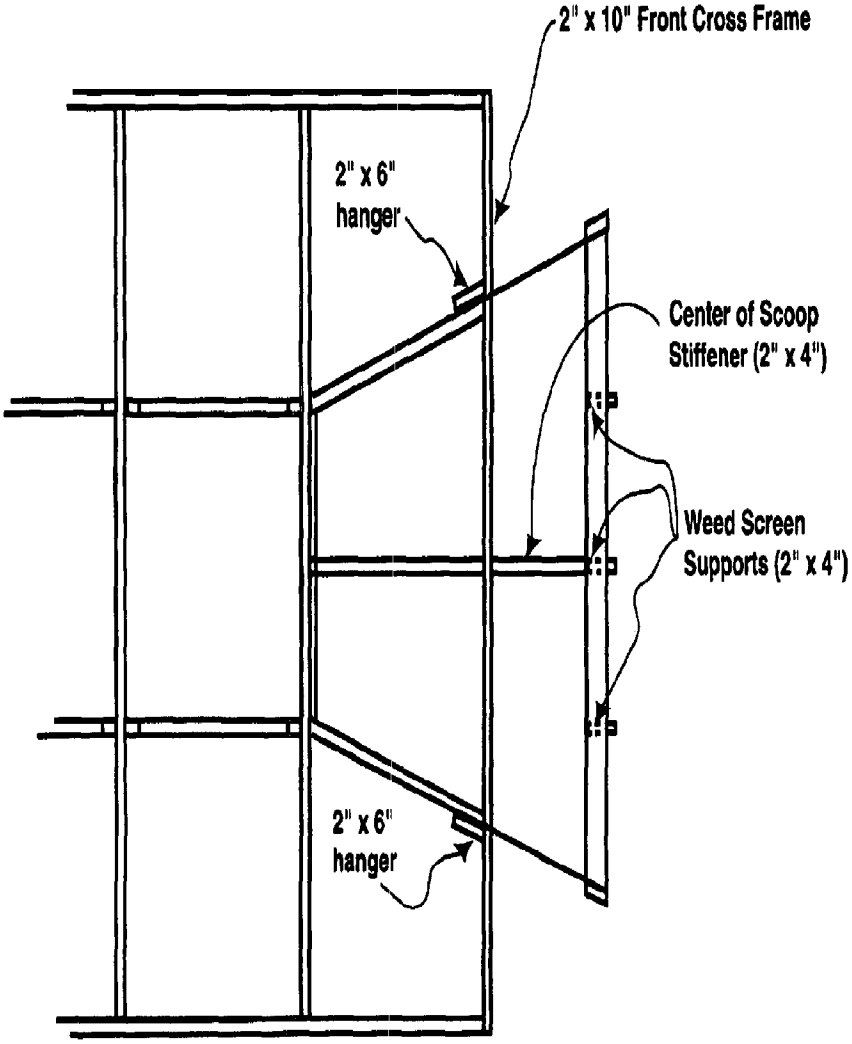

7. Cut 32 strips of 1/4" x 1.5" plastic lath 4" long. Attach two strips per bin onto the 1" x 3" strapping on the top-out sides of the bins (Fig. 13c). The top of the strip should extend 1.5" above the bin. When the bins are in position, one screw in each strip will secure the bins to the 2x10 cross frames and 2x4 bin supports.

Q. Tank Covers

1. The upweller tank should be covered to keep out birds, predators, foreign objects and sunlight. Cut four pieces of 1/4" plywood 54" long and wide enough to fit between the 2x10 cross frames.

2. Fasten two small wooden blocks for handles (or one could use store-bought handles if preferred) approximately 12" from each end. The covers will slide under the longitudinal boards over the outlet trough and sit on top of the tank hangers.

R. Mooring System

1. Because of the flat and square surfaces on the upweller, there is significant water resistance when the tides are running. The anchoring system used, either single or multiple, must be solid. The upweller was moored to the mainline of an adjacent rack growout system which uses a home-made steel anchor at each end.

S. Navigational Marking

1. In most instances, the upweller will have to be equipped with some sort of navigational markers. You should consult with your local U.S. Coast Guard official or state agency representative about the requirements in your location.

2. A barricade light (with batteries) may be sufficient for your needs.

Fig. 13 - SEED BINS

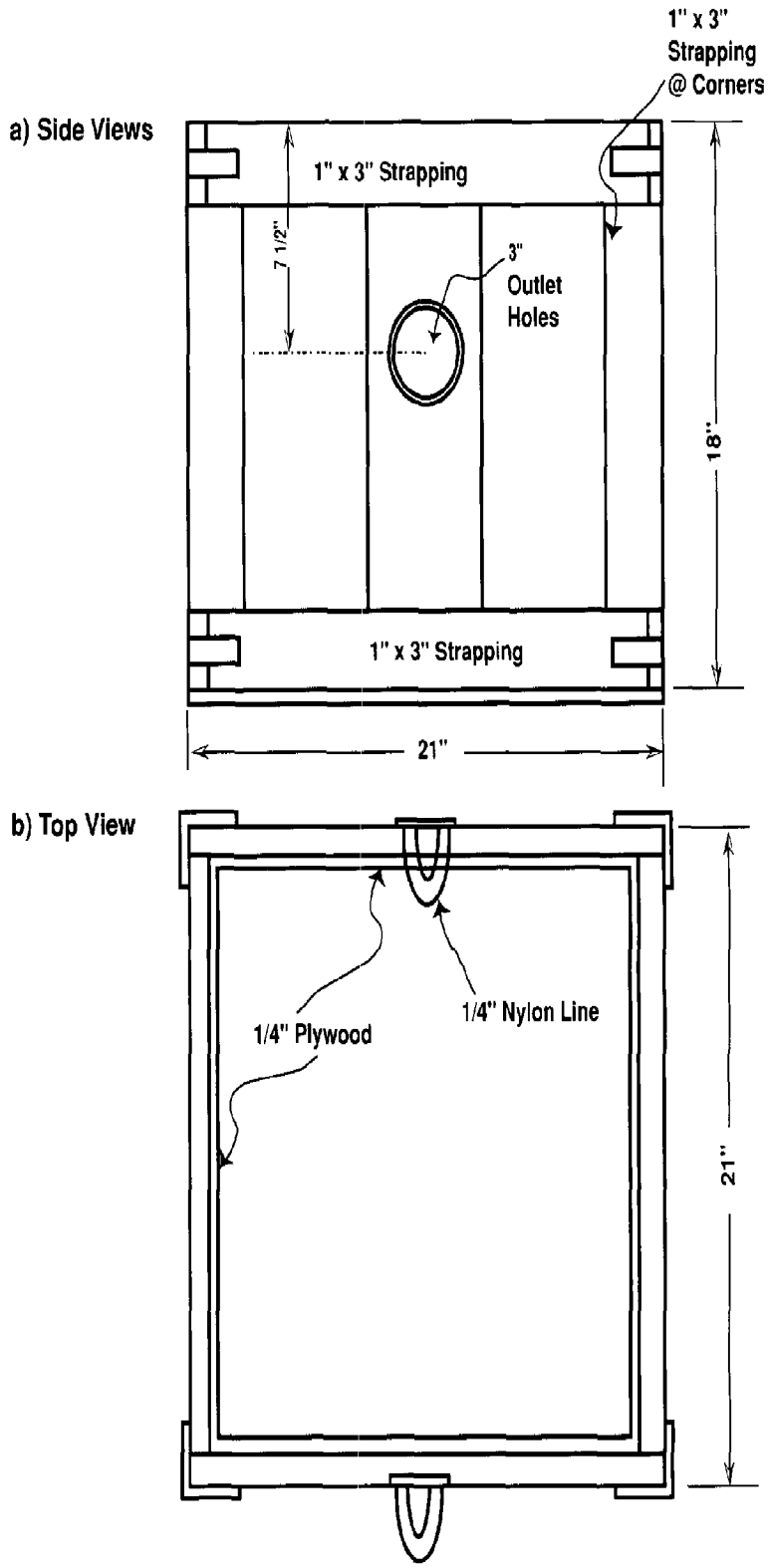

Fig. 13 (Continued)

c) Bin Hanger Detail (Two different hanging systems)

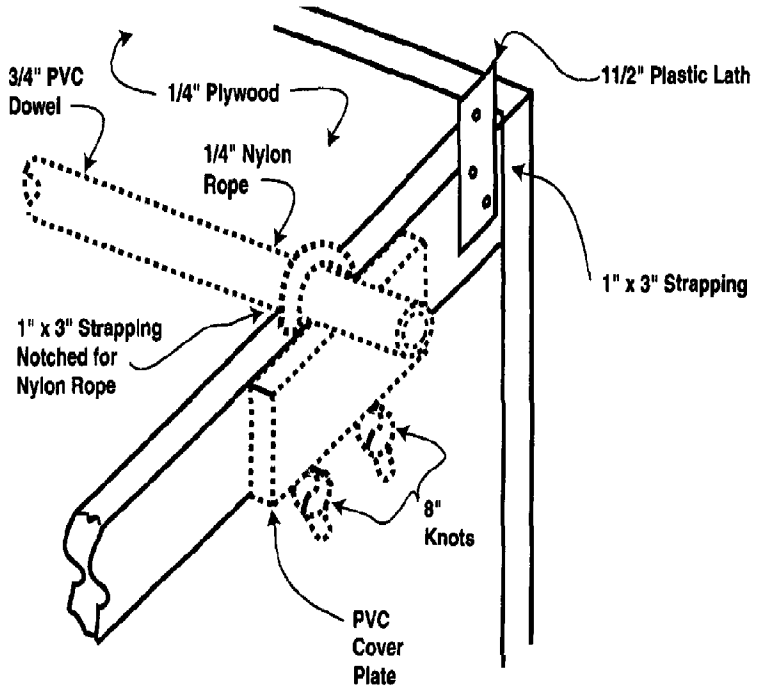

OPERATION OF THE TIDAL UPWELLER

The pilot tidal upweller system was used to grow seed clams from a size of 1 mm to 6 mm. We believe it can be used to grow larger seed, but it has not actually been tested for the larger sizes. Nevertheless, the operating principle is the same as for land-based upwelling systems. Seed are placed on a fine mesh screen and water rises up through the seed, bringing food and carrying away wastes. As the seed grow, they are thinned by dividing them into progressively more growing bins. As seed usually demonstrate a rather wide range of growth rates, they are sorted into size classes as they are thinned.

Flow Rate

The carrying capacity of an upweller system depends on the flow rate. In a tidal upweller system the flow rate is a function of the current speed. In addition to being different for every site, current speed varies throughout the tidal cycle and to a lesser extent from day to day. We have based our carrying capacity determinations on the flow rate resulting from an average current speed for our site.

Current speed can be estimated by floating a weighted float a known distance. A suitable float can be made by embedding a heavy nail in the flatter end of a wine bottle cork. Test the float before using. It should float vertically with more than half of the cork below the water line. If it floats too low, it will be hard to see. If it floats too high it will be unstable and subject to influence by wind and waves, thus affecting the calculations.

Current should be measured on a still day to minimize wind interference with the float. Carefully place the float in the water at one end of the upweller raft. Time how long the cork requires to float the length of the raft and retrieve it at the far end with a dipnet or something similar. Repeat this process at least three times in rapid succession and average the times. Calculate the current speed in ft/sec. For example, if the float moves 20 feet in 10 seconds, the current speed is 2.0 ft/sec (20 divided by 10).

In order to determine the average current, you could measure currents at intervals for an entire day (or more) and calculate the average. Fortunately, the average current can be reasonably estimated if the maximum current is known. If a tidal current table is available, it will provide an estimate of the time maximum current will occur in your general vicinity.

If a current table is not available, several current measurements will be needed in order to estimate the timing of the maximum current. Refer to a tide chart to determine time of high or low tide. Begin taking measurements three hours before or after high tide. Every 30 minutes (more frequently if possible), take another measurement. If the second and third measurements are lower than the first, you started your measuring too late. Begin on another day, starting 4-5 hours before or 1-2 hours after high tide. Record the times and current speeds carefully. Ideally, your measured speeds will increase and then decrease, allowing you to determine the magnitude and timing of the maximum current. You can then return on subsequent days at the appropriate time (relative to the tide) and take additional measurements to better estimate the maximum current.

For example, assume you arrive on site at 1:00 pm on a day when high tide occurs at 4:00 pm. You take the following series of measurements:

Time	Distance	Seconds	Speed
1:00 pm	20 ft	20 sec	1.0 ft/s
1:20 pm	20 ft	15 sec	1.3 ft/s
1:55 pm	20 ft	10 sec	2.0 ft/s
2:15 pm	20 ft	12 sec	1.7 ft/s
2:30 pm	20 ft	16 sec	1.2 ft/s

The maximum current was 2.0 ft/sec and occurred approximately 2 hours prior to high tide. On future days, you can measure the current only once, 2 hours before the tide. Measure the maximum currents on several days representing average tides for your area. Average these measurements to determine your average maximum current speed.

Once you have a good estimate of the maximum current speed, it is easy to calculate the average current. The average current is approximated by this equation:

$$\text{average current} = 2/\pi \times \text{maximum current}$$

For convenience, we have tabulated average currents expected from maximum currents in the range of 1 to 6 ft/sec in Table 2. This table also shows the flow rate through the upweller bins which is expected to result from various currents. These flow rates were determined in our pilot system and each system may vary in performance. However, our flows seem to correlate fairly closely with those

reported by Mook for a system in Maine under a different current regime (Mook and Johnson 1988). Therefore, we think most upweller systems will generate flow rates similar to those shown in the table.

Actual flow rates through the upweller system can be measured by floating the cork in the outflow trough. However, the narrow width of the trough makes this method difficult, as the cork may frequently collide with the trough wall. Mook described a method of measuring the flow with a liquid dye (Mook and Johnson 1988; they used evaporated milk).

The dye is injected below the water surface using a small diameter straw. Its passage over a known distance can then be timed. The current speed (in ft/sec) must be converted into flow volume by measuring the width and depth of the water column at the point of measurement. An example calculation is given in Table 3.

Table 2. Average current speed based on various maximum current speeds and predicted flow rates through the upwelling bins

Maximum Current			Average Current			Predicted Flow Rate	
(ft/s)	(cm/s)	(knot)	(ft/s)	(cm/s)	(knot)	(liters/min)	(gal/min)
1	30	0.59	0.64	19	0.38	28	7.4
1.5	45	0.89	0.95	29	0.57	35	9.2
2	60	1.19	1.27	38	0.75	42	11.1
2.5	76	1.48	1.59	48	0.94	49	12.9
3	91	1.78	1.91	58	1.13	56	14.8
3.5	97	1.90	2.04	62	1.21	59	15.6
4	121	2.37	2.55	77	1.51	71	18.7
4.5	128	2.49	2.67	81	1.59	74	19.5
5	152	2.96	3.18	97	1.89	85	22.4
5.5	167	3.26	3.50	106	2.08	92	24.3
6	182	3.56	3.82	116	2.26	100	26.4

Table 3. Calculating flow rate through the bins

Steps:
1. Measure current in outflow trough
2. Determine volumetric flow through outflow trough
3. Divide by number of bins upstream

Example:

Given:

8 bins operating upstream
Current speed in trough: 24 in. in 4 sec. = 6 in./sec.
Trough width: 8 inches
Water depth in trough: 6 inches

Multiply the width by the depth by the distance traveled:

8 x 6 x 6 = 288 cubic inches/second

Convert to gallons/second (231 cubic inches = 1 gallon):

288 divided by 231 = 1.25 gallons/second

Convert to gallons/minute:

1.25 x 60 = 75 gallons/minute

Divide by the number of bins:

75/8 = about 9 gallons/minute per bin

The procedure is the same, and the calculation is easier, if you use the metric system. Make your measurements in centimeters. A cubic centimeter = a milliliter and there are 1000 milliliters in a liter.

Given:

trough is 20 centimeters wide
water is 15 centimeters deep
speed is 15 centimeters/sec

Flow = 20 x 15 x 15 = 4500 cubic centimeters/sec = 4.5 liters/sec = 270 liters/minute

Flow/bin = 270/8 = about 34 liters/min (= about 9 gallons/min)

Stocking Densities

Once the flow rate through the system is known, appropriate stocking densities for various seed sizes can be determined. Table 4 (column 2) shows the desired flow rate per unit volume of various sized seed clams. To determine stocking volumes, divide your average flow rate in liters per minute by the desired flow ratio from column 2 of Table 4. The result is the number of liters of clams which can be stocked in one bin. For example, Table 4 shows that 1 mm clams require 180 liters of water for each liter of clams. If your average flow is 60 liters per minute, each bin can be stocked with 0.333 liters (60 divided by 180) of 1 mm clams. In practice you would probably round this amount down to 300 ml or up to 350 ml. The flow ratios shown in Table 4 were determined in our pilot system. They may be used as starting points for initial operation but, due to site differences (e.g., food quality and quantity, turbidity, salinity), each upweller system will have different optimum stocking densities. Therefore, be prepared to adjust stocking densities depending on your own experiences.

Table 4. Recommended flow ratios (liters of water per liter of clams per minute) and stocking densities for various size seed clams in the tidal upwelling system.

Seed Size (mm)	Flow ratio	Stocking Volume (ml) at Average Flow (l/m): 30	40	50	60	70	80
1	180	167	222	278	333	389	444
2	120	250	300	416	500	583	667
3	100	300	400	500	600	700	800
4	60	500	667	833	1000	1167	1333
5	45	667	889	1111	1333	1556	1778
6	35	857	1143	1429	1714	2000	2286
7	27	1111	1482	1852	2222	2593	2963
8	18	1667	2222	2778	3333	2889	4444
9	12	2500	3333	4167	5000	5833	6667

Note: the flow ratio is the same if using US measurements (e.g., gallons) but make sure that water flow and clams are measured in the same unit, i.e., both in gallons, both in quarts, or both in ounces, etc.

Stocking volumes in Table 4 are packed volumes. To determine packed volume of a sample of clams, half-fill a graduated container with water. This can be a graduated cylinder (most accurate) or a graduated beaker or pitcher. The container should be translucent. Pour the seed clams slowly into the container using a funnel. (Always work over a pan or tray in case you spill some seed). When all the seed are in the container, add additional water if necessary to cover the seed with at least an inch of water. Tap the side of the container several times to settle ("pack") the clams. The height of the column of clams after settling is the "packed volume."

Maintenance Requirements

Once the tidal upweller is deployed and stocked with seed, routine maintenance is required to ensure optimum growth and survival. The frequency of maintenance will depend on the growth rate of the clams and the fouling rate. Both of these are temperature and salinity dependent. The higher the temperature and the salinity, the faster the seed will grow and the faster the system will foul. In the winter, thorough cleaning may only be needed monthly, while in the summer it will be required at least biweekly.

The system and the clams should be inspected weekly (biweekly is probably adequate in winter). Remove the bins from the tank and rinse the clams to remove all silt and feces. Examine the seed for fouling organisms (e.g., sea squirts) and predators (small crabs). Examine the screens for fouling by bryozoans or algae which will retard flow. Rinse the clams into one corner of the bin and lay the bin on its side to allow the screen to air dry. Air drying the bins once a week will retard fouling on the screen. (Exercise caution not to let very small seed dry out or get overheated during this process.)

When screens become fouled, or sea squirts or other nuisance species are found in the bins, it is time for a thorough cleaning. This will be at least biweekly during summer, possibly only monthly when it is cooler. The clams should be removed from the bins. Each bin and drain pipe should be scraped to remove any barnacles and oysters. The screen should be scrubbed with a nylon brush. Both screen and bin may be sprayed with dilute chlorine bleach, rinsed and allowed to air dry. (It is convenient to sort and thin the clams at this time, since they are already out of the bins. This process is described in the next section.)

The weed screen will need to be cleaned as frequently as the bins. It should be pulled up, scrubbed with bleach and air-dried. While the

bins are out of the tank, a push-broom, hoe or similar tool is used to stir up the silt in the bottom of the tank, allowing it to be washed out.

Thinning and Sorting

In order to maintain rapid growth, the seed clams must be thinned regularly. A rule of thumb in land-based nurseries is to thin whenever the volume doubles. During the growing season, this may be weekly. In the pilot tidal upweller, biweekly thinning appeared to be adequate to maintain rapid growth even though seed volume often tripled or quadrupled over two weeks. (This may indicate that the bins could be stocked more densely if you were willing to clean more frequently.)

Growth is usually improved if similar-sized clams are kept together. This is accomplished at the same time as thinning by sieving the seed through a series of screens. Sieves may be purchased in a range of standard sizes or constructed by attaching various screening materials to a wooden frame. Table 5 shows seed sizes that are retained on standard sieves. If you choose to construct your own sieves, you will need screening materials of varying pore size from 1-1.5 mm up to about 6 mm. Ideally, you would have four sieves of approximately 1.5, 3, 4, and 6 mm. This would enable you to sort seed into size classes of approximately $\leq$2 mm, 2-4 mm, 4-6 mm, 6-8 mm, and >8 mm.

To thin and sort the seed, remove a bin from the upwelling system and rinse its entire contents into a shallow tray (e.g., a dishpan). If there is more than one bin containing seed of a given size, they may be combined prior to sieving. Depending on the size of the seed (and previous sieving) they should be sieved on one or more screens. Each sieving will produce two size classes, those which stay on the sieve and those which pass through. Clams which will stay on the largest sieve (= 8 mm or more) are ready for transfer to your growout system. Sieve the clams in water by gently agitating the screen up and down. Sieving is most effective if relatively small quantities are placed on the screen at a time.

Determine the packed volume of each size category created by sieving. If desired, you may also determine the approximate number by measuring out a small volume of seed and counting them, and/or the average size by measuring a handful of clams with calipers. If you are using standard sieves, the number and size of clams in each category will be fairly close to those listed in Table 5. After sorting, the clams should be redistributed into clean bins at reduced densities, using Table 4 to determine appropriate densities. If there is only a small

quantity of seed in any one category, they may be combined with the next category. For example, it would not be economical to maintain 300 ml of 6 mm seed in a separate bin, so these could be combined with either 5 mm or 7 mm seed.

Table 5. Size and count of seed clams retained on standard sieves

Sieve Size		Seed Size	Seed Count
US#	mm	(Length,mm)	(#/ml)
25	0.710	1	2700
18	1.0	1.5	800
14	1.4	2	350
12	1.7	2.5	200
10	2	3	100
8	2.36	3.5	60
7	2.8	4	40
6	3.35	5	20
5	4.0	6	12
4	4.75	7	8
3 1/2	5.6	8	5
1/4 in	6.3	9	3.5

Carrying Capacity

The upweller system can accommodate far more 1 mm seed than could be reared to 8-10 mm in size. The carrying capacity is determined by the quantity the system can accommodate at an intermediate size, 1-2 mm less than the final desired size. If the target size is 10 mm, the carrying capacity is the quantity of 7-8 mm seed that can be accommodated. These seed will begin to reach the target size over the next month and therefore the density will be continually reduced thereafter as seed are moved to the growout system.

Table 6 shows the number of seed the pilot system can accommodate by size up to 9 mm. Remember that the system has not actually been tested with seed larger than 6 mm. The number of 7-8 mm seed which can be accommodated is about 250,000. This is the carrying capacity if the target size is 10 mm. If the target size is only 7 mm, the carrying capacity is considerably higher (about 350,000). Carrying capacity will be different for each system, depending on

factors such as flow rate and ambient food availability.

Labor Requirements

One of the benefits of the tidal-powered upwelling system is its ease of maintenance. Cleaning is less frequent and takes less time than in land-based nursery systems. Most of the maintenance and operation tasks of the tidal system can be accomplished by one operator, although it will certainly be easier and faster with two.

Routine cleaning of the units, which includes rinsing all the bins, requires about 45 minutes. A thorough cleaning, including removing the clams, scrubbing the bins, cleaning the weed screen and redistributing seed back into the bins, requires approximately 3 hours. Thus, total labor requirements are only about 7.5 hours/month during the growing season. Of course, these estimates do not include the time to travel to and from the site.

Table 6. Suggested stocking volumes for 19x19 bins with an average flow of 52 liters per minute

Seed Size (Length,mm)	Seed Count (#/ml)	Volume per bin (ml)	# per bin (x 1000)	System capacity (x 1000)
1	2700	300	810	12,960
1.5	800	350	280	4,480
2	350	450	157	2,520
2.5	200	475	95	1,520
3	100	520	52	832
3.5	60	650	39	624
4	40	850	34	544
5	20	1150	23	368
6	12	1500	18	288
7	8	2000	16	256
8	5	3000	15	240
9	3.5	4000	14	224

COST CONSIDERATIONS

Costs of Materials and Construction

The types and costs of materials are listed in Table 1 (see page 8). The total cost of materials in Table 1 is about $ 2,775.00. This does not include the time to actually construct and launch the upweller. Someone with carpentry skills, the proper tools, and a part-time helper should be able to construct and launch one upweller by "investing" about 240 man-hours (i.e., about six weeks of construction, working at 40 hours per week). Someone with no carpentry skills may require much more time; the cost of contracting and/or hiring someone to construct the upweller may need to be considered.

Operating Costs

The time and frequency for cleaning the upweller's bins and culling and splitting seed clams are given in the previous section "Operation of the Tidal Upweller." In addition, it may be necessary to haul the upweller out of the water, depending upon fouling and other factors (e.g., storm-related damage repairs) every 12 to 18 months for scraping, recaulking, painting and other routine maintenance activities. In general, one should plan to spend about 220 hours (about 28 days) each year on operating the upweller (e.g., cleaning bins) and maintenance (e.g., repairing bins and the raft). This time estimate does not include travel time to and from the upweller site. Cost of materials for minor repairs and annual maintenance could range from $100 to $200 each year.

Relative Cost Savings of Using the Tidal-Powered Upwelling Nursery

The amount of time and cost saved by using the upweller system will depend on a number of factors, including how much one values time (economists call this the "opportunity cost of labor and management" - that is, what other type of income would one forego to construct, operate and maintain the upweller), the market price and the size (e.g., 6 mm vs. 12 mm) of plantable clams one would normally use for final growout, the amount of time and expense to construct the upweller, and travel time to and from a suitable site. A comparative cost analysis of this upweller to other clam nursery systems has been made (see Baldwin, et al. 1994). Including the cost of construction labor, it appears that a tidal-powered upweller can be

$800 to nearly $1,600 less expensive to construct than small-scale nursery systems with similar capacity. Including the costs of construction, the relative annual operating cost savings for the tidal-powered upweller could exceed $3,000 per year compared to two other land-based systems (Table 7). In other words, given the assumptions made in Baldwin et al. 1994, it appears that the cost savings from using the upweller could "pay back" the initial construction costs in at least two years. Indeed , the five-year net present cost savings for the upweller would range from about $13,000 to $14,700. In contrast, some will prefer backyard land-based nursery systems like raceways because of ease of access to the system and the convenience of securing and monitoring the system.

Table 7. Cost comparison of a tidal-powered upweller (TPU) to land-based nursery systems (URS = upweller-raceway; RS = raceway) with access to suitable land sites.

	TPU	URS	RS*
Initial Construction Cost:	$ 4,500	$6,100	$5,300
Projected Annual Operating Costs:			
Annual seed purchases: $3.30/1,000	2,200	2,200	4,690
Operating and Maintenance Labor**	2,180	3,400	1,450
Utilities	000	1,800	1,600
Materials for Maintenance	100	300	200
Total Operating Costs Including Seed:	4,480	7,700	7,940
Projected Annual Operating Savings:* **	**N/A**	**3,220**	**3,460**
Discount Rate:	7.0%	7.0%	9.0%
Projected 5-year Present Value Cost:	($22,574)	($37,254)	($35,741)
Projected Savings of the Upweller:		**$14,679**	**$13,166**

*Approximately 533,000 seed clams (2-4 mm) purchased at $8.80/1,000 including shipping costs.
**Estimated opportunity cost of the owner-operator's labor only.
***Projected annual operating savings for using the TPU compared to a URS or RS.

LITERATURE CITED AND FURTHER READING

Baldwin, R.B., N.H. Hadley, R.J. Rhodes and M.R. DeVoe. 1994. Demonstration and evaluation of the performance of a tidal-powered upwelling nursery system in South Carolina. Final report submitted to the NOAA National Coastal Resources Research and Development Institute, Portland, Oregon. 26pp.

Hayes, J.C. 1981. Forced upwelling nurseries for oysters and clams using impounded water systems. pp. 73-82 in Claus et al., eds. Nursery Culturing of Bivalve Molluscs. Eur. Mar. Soc. Spec. Pub. #7. Belgium.

Hadley, N.H. 1995. A manual for the culture of the hard clam *Mercenaria* spp. in South Carolina. S.C. Sea Grant Consortium. Charleston.

Kemp, P.S. 1991. Clam gardening: a manual for small-scale clam operations in North Carolina. NOAA, NMFS, Office of Sea Grant, UNC-SG-91-02. 35 pp. [$5.00 from UNC Sea Grant College Program.]

Malinowski, S. 1988. Variable growth rates of seed clams in an upflow nursery system and the economics of culling slow growing animals. J. Shellf. Res. 7(3):359-366.

Manzi, J. and M. Castagna, eds. 1989. Clam Mariculture in North America. Elsevier, New York.

Manzi, J., N. Hadley, C. Battey, R. Haggerty, R. Hamilton and M. Carter. 1984. Culture of the northern hard clam in a commercial-scale, upflow nursery system. J. Shellf. Res. 4(2):119-124.

Mook, W. 1988. Guide to construction of a tidal upweller. Mook Sea Farm, Inc. Damariscotta, Maine. 23pp.

Mook, W. and A.C. Johnson. 1988. Utilization of low-cost, tidal-powered floating nurseries to rear bivalve seed. Mook Sea Farm, Inc. Damariscotta, Maine. 28pp.

ACKNOWLEDGMENTS

This work was sponsored by the National Coastal Resources Research and Development Institute, NOAA, U.S. Department of Commerce through the S.C. Sea Grant Consortium under Contract No. AQ66.90-5628-03.

The authors wish to express their appreciation to the staff of NCRI for their assistance and guidance during the course of this project, and especially to Dr. Earle Buckley and Dr. Steve Olson.

Special thanks go to the Cape Romain Wildlife Refuge (U.S. Fish and Wildlife Service, U.S. Department of the Interior) and Refuge Manager George Garris for allowing this project to be conducted within its boundaries.

NOAA COASTAL SERVICES CENTER LIBRARY
3 6668 00000 3816