U.S. DEPARTMENT OF COMMERCE/Environmental Science Services Administration

Technical Report

RESEARCH LABORATORIES

ERL 118-POL 3-1

An Introduction to Hydrodynamics and Water Waves
Volume I: Fundamentals

BERNARD LE MÉHAUTÉ

GEOPHYSICAL SCIENCES
LIBRARY
MAR 26 1970
E.S.S.A.
U. S. DEPT. OF COMMERCE

JULY 1969

Miami, Florida

U. S. DEPARTMENT OF COMMERCE
Maurice H. Stans, Secretary

ENVIRONMENTAL SCIENCE SERVICES ADMINISTRATION
Robert M. White, Administrator
RESEARCH LABORATORIES
George S. Benton, Director

ESSA TECHNICAL REPORT ERL 118-POL 3-1

An Introduction to Hydrodynamics and Water Waves
Volume I: Fundamentals

QC
807.5
.U66
no.118
v.1
c.2

BERNARD LE MÉHAUTÉ, D. Sc.

Vice President

Tetra Tech, Inc.

Pasadena, California

PACIFIC OCEANOGRAPHIC LABORATORIES
MIAMI, FLORIDA
July 1969

For sale by the Superintendent of Documents, U.S. Government Printing Office, Washington, D.C. 20402
Price $3.75

HYDRODYNAMICA,

SIVE

DE VIRIBUS ET MOTIBUS FLUIDORUM COMMENTARII.

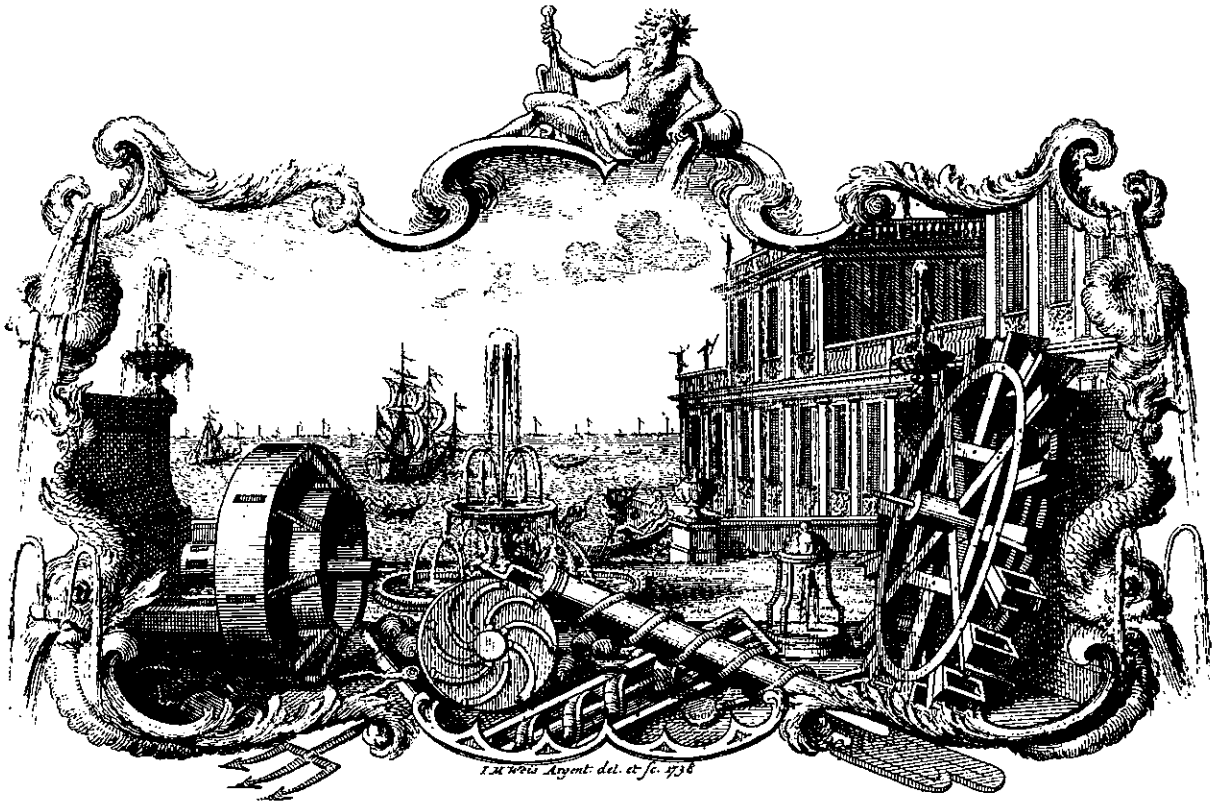

"Remember, when discoursing about water,
to induce first experience, then reason"

Leonardo da Vinci

FOREWORD

Understanding and interpreting oceanographic observations depend on a knowledge of the basic physics governing water motion. Water waves, from the shortest ripples that roughen the sea surface, increasing wind drag, to the tides of global dimensions, with their associated currents affecting the entire ocean volume, influence the oceanic and nearshore environment. ESSA has a wide variety of interests in fluid dynamics and especially in water waves. Its interest in hydrodynamics extends from the most basic scientific aspects, which may be of academic interest only, to engineering applications, which put knowledge into use for the good of mankind. Dr. Le Méhauté does much to bridge the gap between rigorous but abstract theoretical works, which are often difficult to translate into useable applications, and pure engineering approaches to hydrodynamics, which do not go much beyond a presentation of results and so contribute little to one's basic understanding.

Gaylord R. Miller
Director
Joint Tsunami Research Effort
Pacific Oceanographic Laboratories

ACKNOWLEDGEMENTS

The author wishes to express his deep gratitude to Nicholas Boratynski, President of Tetra Tech, Inc. Without his encouragement and support these lecture notes would not have been revised and published.

The author also wishes to give particular thanks to Professors L. Escande, J. Kravtchenko, P. Danel, and F. Biesel, who all have had a deep influence on the writing of this book; and to Professor R. J. Kennedy of Queen's University, Kingston, Canada, who gave the author the opportunity of writing it.

Many valuable suggestions and original contributions are credited to Drs. Li-San Hwang, Ian Collins, and Robert C. Koh. Mr. D. Divoky reviewed the manuscript.

The author also wants to acknowledge Mmes. M. Evans and L. Kauk for their patience, care and numerous suggestions in the editing work.

Bernard Le Méhauté

CONTENTS
VOLUME I

FOREWORD		iii
ACKNOWLEDGEMENTS		iv
PREFACE		xxi
INTRODUCTION		xxv
	PART ONE	
I	THE BASIC CONCEPTS AND PRINCIPLES OF THEORETICAL HYDRAULICS	2
I-1	Basic Concepts of Theoretical Hydraulics	2
	I-1.1 Definition of an Elementary Particle of Fluid	2
	I-1.2 The Two Parts of Theoretical Hydraulics	3
	I-1.3 Relations Between Fluid Particles	4
	I-1.4 Basic Assumption on Friction Forces	4
I-2	Streamline, Path, Streakline, and Stream Tube	5
	I-2.1 Notation	5
	I-2.2 Displacements of a Fluid Particle	6
	I-2.3 Streamline	7
	I-2.4 Path	9
	I-2.5 Streakline	10
	I-2.6 Stream Tubes	10
	I-2.7 Steady and Unsteady Flow	12
I-3	Method of Study	12
	I-3.1 Lagrangian Method	12
	I-3.2 Eulerian Method	14
	I-3.3 Relationships Between the Two Approaches	15
	I-3.4 An Example of Flow Pattern	16
I-4	Basic Equations	18
	I-4.1 The Unknowns in Fluid Mechanics Problems	18
	I-4.2 Principle of Continuity	19
	I-4.3 Principle of Conservation of Momentum	20
	I-4.4 Equation of State	20

	I-4.5 Principle of Conservation of Energy	21
I-5	Boundary Conditions	22
	I-5.1 Free Surface	23
	I-5.2 Solid Boundaries	24
	I-5.3 Infinity Introducing a Boundary Condition	26
II	MOTIONS OF ELEMENTARY FLUID PARTICLES	34
II-1	Introduction to the Different Kinds of Motion	34
II-2	Translatory Motion	36
II-3	Deformation	38
	II-3.1 Dilatational or Linear Deformation	38
	II-3.2 Angular Deformation or Shear Strain	40
II-4	Rotation	44
	II-4.1 Mathematical Definitions	44
	II-4.2 Velocity Potential Function - Definition	45
	II-4.3 Theoretical Remark on Irrotational Flow	46
	II-4.4 Practical Limit of Validity of Irrotationality	50
II-5	Mathematical Expressions Defining the Motion of a Fluid Particle	58
	II-5.1 Two-Dimensional Motion	58
	II-5.2 Three-Dimensional Motion - Definition of Vorticity	60
	II-5.3 Velocity Potential Function in the Case of a Three-Dimensional Motion	62
	II-5.4 Stokes Analogy - Experience of Shaw	63
III	THE CONTINUITY PRINCIPLE	72
III-1	Elementary Relationships	72
	III-1.1 The Continuity in a Pipe	72
	III-1.2 Two-Dimensional Motion in an Incompressible Fluid	73
	III-1.3 The Case of a Convergent Flow	74

III-2	The Continuity Relationship in the General Case	75
	III-2.1 Establishment of the Continuity Relationship	75
	III-2.2 Physical Meaning and Approximations	80
III-3	Some Particular Cases of the Continuity Relationship: Gravity Waves, Pressure Waves	84
	III-3.1 Translatory Gravity Waves	85
	III-3.2 Water Hammer	86
III-4	Particular Forms of the Continuity Relationship for an Incompressible Fluid	89
	III-4.1 Irrotational Flow	89
	III-4.2 Lagrangian System of Coordinates	90
IV	INERTIA FORCES	94
IV-1	Mass, Inertia, Acceleration	94
	IV-1.1 The Newton Equation	94
	IV-1.2 Relationships Between the Elementary Motions of a Fluid Particle and the Inertia Terms	95
	IV-1.3 Two Main Kinds of Inertia Forces	96
IV-2	Local Acceleration	97
	IV-2.1 Examples of Flow with Local Inertia	97
	IV-2.2 Mathematical Expression of Local Inertia	99
IV-3	Convective Acceleration	99
	IV-3.1 Examples	99
	IV-3.2 The Case of Shear Deformation	101
	IV-3.3 The Case of a Change of Rotation	102
IV-4	General Mathematical Expressions of Inertia Forces	104
IV-5	On Some Approximations	108
	IV-5.1 Cases Where the Local Acceleration is Neglected	108
	IV-5.2 Cases Where the Convective Acceleration is Neglected or Approximated	111

V	APPLIED FORCES	123
V-1	Internal and External Forces	123
	V-1.1 Internal Forces	123
	V-1.2 External Forces	123
	V-1.3 Remarks on External and Internal Forces	125
V-2	Gravity Forces	126
V-3	Pressure Forces	127
	V-3.1 Pressure Intensity, Pressure Force and Direction	127
	V-3.2 Rate of Pressure Force per Unit of Volume	129
	V-3.3 Fluid Motion and Gradient of Pressure	130
	V-3.4 Pressure and Gravity	131
V-4	Viscous Forces	131
	V-4.1 Mathematical Expression for the Viscous Forces	131
	V-4.2 Mathematical Characteristics	133
	V-4.3 Approximations Made on Viscous Forces	134
V-5	Some Theoretical Considerations of Surface Forces	134
	V-5.1 A General Expression for Surface Forces	134
	V-5.2 The Nine Components of the External Forces	135
	V-5.3 The Six Components of Lamé	138
	V-5.4 Value of the Lamé Components in Some Particular Cases	139
	V-5.5 Dissipation Function	142
VI	EQUATIONS OF EULER -- NAVIER - STOKES EQUATIONS -- STABILITY OF LAMINAR FLOW	147
VI-1	Main Differential Forms of the Momentum Equation	147
	VI-1.1 Perfect Fluid	147
	VI-1.2 Viscous Fluid and the Navier - Stokes Equations	150
	VI-1.3 The General Form of the Momentum Equation	153

VI-2	Synthesis of the Most Usual Approximations	154
	VI-2.1 An Example of an Exact Solution of Navier - Stokes Equations	157
VI-3	The Stability of a Laminar Flow	161
	VI-3.1 The Natural Tendency for Fluid Flow to be Unstable	161
	VI-3.2 Free Turbulence, Effects of Wall Roughness	164
	VI-3.3 Some Theoretical Aspects	166
VII	TURBULENCE -- MEAN MOTION -- MEAN FORCES -- REYNOLDS EQUATION	175
VII-1	The Definition of Mean Motion and Mean Forces	175
	VII-1.1 Characteristics of Mean Motion Versus Actual Motion	175
	VII-1.2 Validity of the Navier - Stokes Equation for Turbulent Motion	176
	VII-1.3 Definitions of the Mean Values in a Turbulent Flow	177
	VII-1.4 Steady and Unsteady Mean Turbulent Flows	178
	VII-1.5 Mean Motion in a Pipe	179
	VII-1.6 Mean Forces	181
VII-2	Calculation of the Mean Forces	183
	VII-2.1 The Constant Force	183
	VII-2.2 Linear Forces	184
	VII-2.3 The Quadratic Forces	187
VII-3	The Continuity Relationship	190
VII-4	The Main Characteristics of the Mean Motion of a Turbulent Flow	191
VII-5	Reynolds Equations	192
	VII-5.1 Purpose of the Reynolds Equations	193
	VII-5.2 Reynolds Stresses	194
	VII-5.3 Value of the Lamé Components in a Turbulent Motion	195
	VII-5.4 Usual Approximation	197

	VII-5.5 Correlation Coefficients and Isotropic Turbulence	197
VIII	TURBULENCE -- EFFECTS -- MODERN THEORIES	201
VIII-1	Some Physical Effects of Turbulence Fluctuations	201
	VIII-1.1 Velocity Distribution	201
	VIII-1.2 Irrotational Motion	206
	VIII-1.3 Pressure	206
VIII-2	Turbulent Flow Between Two Parallel Planes	208
	VIII-2.1 Establishment of Equations of Motion	208
	VIII-2.2 Integration of Equations of Motion	210
	VIII-2.3 Variation of the Mean Pressure in a Turbulent Flow	211
	VIII-2.4 Secondary Currents	211
VIII-3	Modern Theories on Turbulence	212
	VIII-3.1 The Unknowns in a Turbulent Flow	212
	VIII-3.2 Boussinesq Theory	213
	VIII-3.3 Prandtl Theory for Mixing Length	215
	VIII-3.4 Taylor's Vorticity Transport Theory	217
	VIII-3.5 Value of the Mixing Length	217
	VIII-3.6 Von Kármán's Similarity Hypothesis	218
	VIII-3.7 Other Theories	219
VIII-4	Some Considerations on the Loss of Energy in a Uniform Flow	219
	VIII-4.1 A Review of Elementary Hydraulics	219
	VIII-4.2 A Theoretical Explanation for the Value of Head Loss	220
	VIII-4.3 Work Done by Turbulent Forces	220
	VIII-4.4 Dissipation Function in a Turbulent Motion	222
IX	FLOW IN A POROUS MEDIUM -- LAW OF DARCY	226
IX-1	Average Motion in a Porous Medium	226
	IX-1.1 The Basic Equations	226

	IX-1.2	Simplification of Boundary Conditions for the Mean Motion	226
	IX-1.3	Diffusion in a Porous Medium	227
	IX-1.4	Definition of the Mean Motion in a Uniform Flow	228
	IX-1.5	General Definition of the Mean Motion	229
	IX-1.6	Pressure	231
	IX-1.7	Boundary Conditions	231
	IX-1.8	Analogies Between Turbulent Flow and Flow Through a Porous Medium	232
	IX-1.9	Continuity Relationship	233
IX-2	Law of Darcy		234
	IX-2.1	Capillarity Effect	234
	IX-2.2	The Principle of the Averaging Process	235
	IX-2.3	Approximation	235
	IX-2.4	Mean Forces -- Law of Darcy	236
	IX-2.5	Irrotational Motion and Flow Through Porous Medium	238
	IX-2.6	Velocity Potential Function	238
IX-3	Range of Validity of the Law of Darcy		239
	IX-3.1	Reynolds Number	239
	IX-3.2	Convective Inertia	240
	IX-3.3	Turbulence in Porous Medium	242
	IX-3.4	Permeability Coefficient	242
SUMMARY OF PART ONE			246

PART TWO

X	BERNOULLI EQUATION		249
X-1	Force and Inertia - Work and Energy		249
	X-1.1	Integration of the Momentum Equation in Some General Cases	249
	X-1.2	Momentum and Energy in Elementary Mechanics	249
	X-1.3	Momentum and Energy in Hydraulics	250

	X-1.4 Processes of Integration and Simplifying Assumptions	251
X-2	Irrotational Motion of a Perfect Fluid	251
	X-2.1 Slow-Steady and Uniform-Steady Motions	251
	X-2.2 Slow-Unsteady and Uniform-Unsteady Motions of a Perfect Fluid	255
	X-2.3 Steady Irrotational Motion of a Perfect Fluid	258
	X-2.4 Unsteady Irrotational Flow of a Perfect Fluid	261
X-3	Rotational Motion of a Perfect Fluid	263
	X-3.1 Steady-Rotational Motion of Perfect Fluid	263
	X-3.2 Pressure Distribution in a Direction Perpendicular to the Streamlines	267
	X-3.3 Unsteady-Rotational Motion of a Perfect Fluid	272
X-4	Résumé and Noteworthy Formulas	273
XI	FLOW PATTERN -- STREAM FUNCTION -- POTENTIAL FUNCTION	278
XI-1	General Considerations on the Determination of Flow Pattern	278
XI-2	Stream Function	280
	XI-2.1 Definition	280
	XI-2.2 Stream Function and Continuity	281
	XI-2.3 Stream Function, Streamlines and Discharge	281
	XI-2.4 An Example of Stream Function - Uniform Flow	283
	XI-2.5 Stream Function and Rotation	283
	XI-2.6 General Remarks on the Use of the Stream Function	285
XI-3	Velocity Potential Function	286
	XI-3.1 Its Use	286
	XI-3.2 Definition	287
	XI-3.3 Velocity Potential Function and Rotation	288
	XI-3.4 Equipotential Lines and Equipotential Surface	288

	XI-3.5 Velocity Potential Function and Continuity	289
	XI-3.6 An Example of Velocity Potential Function: Uniform Flow	290
	XI-3.7 General Remarks on the Use of the Velocity Potential Function	291
XI-4	Steady, Irrotational, Two-Dimensional Motion-Circulation of Velocity	292
	XI-4.1 A Review, An Example, Polar Coordinates	292
	XI-4.2 Elementary Flow Patterns and Circulation	298
	XI-4.3 Combination of Flow Patterns	306
XI-5	Reflections on the Importance of Boundary Conditions	312
	XI-5.1 New Theoretical Considerations on the Kinds of Flow	312
	XI-5.2 Irrotational Motion under Pressure and Slow Motion	312
	XI-5.3 Free Surface Flow and Flow With Friction Forces	315
XI-6	Flow Net	316
	XI-6.1 Flow Net Principle	316
	XI-6.2 Flow Under Pressure	317
	XI-6.3 Flow Net With Free Surface	319
	XI-6.4 Other Methods, Conformal Mapping	322
XII	GENERALIZATION OF THE BERNOULLI EQUATION	336
XII-1	An Elementary Demonstration of the Bernoulli Equation for a Stream Tube	336
	XII-1.1 Domain of Application of the Generalized Form of the Bernoulli Equation	336
	XII-1.2 An Elementary Demonstration of the Bernoulli Equation	339
	XII-1.3 Mean Velocity in a Cross-Section	343
XII-2	Generalization of the Bernoulli Equation to a Stream Tube	345
	XII-2.1 Averaging Process to a Cross-Section	345
	XII-2.2 Velocity Head Terms	347

	XII-2.3 Pressure Terms	348
	XII-2.4 Gravity Terms	350
	XII-2.5 Local Inertia Terms	350
	XII-2.6 Practical Form of the Bernoulli Equation for a Stream Tube	351
	XII-2.7 An Application to Surge Tank	351
XII-3	Limit of Application of the Two Forms of the Bernoulli Equation	353
	XII-3.1 The Two Forms of the Bernoulli Equation	353
	XII-3.2 Venturi and Diaphragm as Measuring Devices	355
	XII-3.3 Experience of Banki	355
XII-4	Definition of Head Loss	357
	XII-4.1 Steady Uniform Flow	357
	XII-4.2 Head Loss at a Sudden Change in the Flow	357
	XII-4.3 Head Loss in a Free Surface Flow	359
	XII-4.4 Effect of Local Inertia on Head Loss	362
XIII	THE MOMENTUM PRINCIPLE AND ITS APPLICATION	370
XIII-1	External Forces and Internal Forces	370
	XIII-1.1 The Case of an Elementary Fluid Particle	370
	XIII-1.2 Motion of Two Adjacent Elementary Fluid Particles	370
	XIII-1.3 Generalization for a Definite Mass of Fluid	371
	XIII-1.4 Mathematical Expression of Momentum	371
	XIII-1.5 An Important Remark on Force, Inertia, Work and Energy	372
	XIII-1.6 Field of Application	372
	XIII-1.7 Momentum Theorem and Navier - Stokes Equation	374
XIII-2	Mathematical Demonstration	375
	XIII-2.1 Mathematical Expression of the Total Momentum in a Finite Volume	375
	XIII-2.2 Notation	375
	XIII-2.3 Change of Momentum with Respect to Time	376

	XIII-2.4	Change of Momentum with Respect to Space	377
	XIII-2.5	General Formula	379
	XIII-2.6	Difficulties in the Case of Unsteady Flow	379
	XIII-2.7	The Case of Turbulent Flow	380
XIII-3	Practical Application of the Momentum Theorem - Case of a Stream Tube		381
	XIII-3.1	Limits	381
	XIII-3.2	Practical Expression of the Momentum for Unidimensional Flow	382
	XIII-3.3	External Forces	383
XIII-4	Examples		386
	XIII-4.1	Hydraulic Jump on a Horizontal Bottom	386
	XIII-4.2	Hydraulic Jump in a Tunnel	388
	XIII-4.3	Paradox of Bergeron	389
XIII-5	Difficulties in the Application of the Momentum Theorem		394
	XIII-5.1	Sudden Enlargement	394
	XIII-5.2	Hydraulic Jump Caused by a Sudden Deepening	395
	XIII-5.3	Hydraulic Jump on a Slope	395
	XIII-5.4	Intake	397
	XIII-5.5	Unsteady Flow - Translatory Wave	399
XIII-6	Momentum versus Energy		401
	XIII-6.1	Irrotational Flow Without Friction	403
	XIII-6.2	Unidimensional Rotational Flow	403
	XIII-6.3	Various Applications	404
	XIII-6.4	Mechanics of Manifold Flow	404
	XIII-6.5	Conclusion	406
XIV	BOUNDARY LAYER, FLOW IN PIPES AND DRAG		420
XIV-1	General Concept of Boundary Layer		420
	XIV-1.1	Definition	420
	XIV-1.2	Thickness of Boundary Layer	423

XIV-2	Laminar Boundary Layer	425
	XIV-2.1 Steady Uniform Flow over a Flat Plate	425
	XIV-2.2 Momentum Integral Equation for Boundary Layer	435
	XIV-2.3 Uniform Unsteady Flow over an Infinite Flat Plate	443
	XIV-2.4 Boundary Layers of an Oscillating Flat Plate	446
XIV-3	Turbulent Boundary Layer	448
	XIV-3.1 General Description	448
	XIV-3.2 Resistance and Boundary Layer Growth on a Flat Plate	453
XIV-4	Flow in Pipes	458
	XIV-4.1 Steady Laminar Flow in Pipes	458
	XIV-4.2 Turbulent Velocity Distributions and Resistance Law for Smooth Pipes	460
	XIV-4.3 Effect of Roughness	467
XIV-5	Drag on Immersed Bodies	472
	XIV-5.1 Drag on a Body in Steady Flow	472
	XIV-5.2 Drag Due to Unsteady Motion: the Added Mass Concept	482

VOLUME II
PART THREE

XV	AN INTRODUCTION TO WATER WAVES	507
XV-1	A Physical Classification of Water Waves and Definitions	507
	XV-1.1 On the Complexity of Water Waves	507
	XV-1.2 Oscillatory Waves	509
	XV-1.3 Translatory Waves	517
XV-2	Criteria for Mathematical Methods of Solution	518
	XV-2.1 The Significant Wave Parameters	518
	XV-2.2 The Methods of Solution	520

	XV-2.3 An Introduction to the Ursell Parameter	523
	XV-2.4 The Two Great Families of Water Waves	526
XV-3	The Small Amplitude Wave Theory	529
	XV-3.1 The Basic Assumption of the Small Amplitude Wave Theory	529
	XV-3.2 The Various Kinds of Linear Small Amplitude Wave Theories	530
	XV-3.3 The Non-linear Small Amplitude Wave Theories	534
	XV-3.4 On the Effect of Rotationality on Water Waves	538
XV-4	The Long Wave Theory	543
	XV-4.1 The Basic Assumptions of the Long Wave Theory	543
	XV-4.2 The Principle of Numerical Methods of Calculation	544
	XV-4.3 The Versatility and Limits of Validity of Numerical Methods of Calculation	546
	XV-4.4 Steady State Profile	549
XV-5	Wave Motion as a Random Process	551
	XV-5.1 A New Approach to Water Waves	551
	XV-5.2 Some Definitions and Stability Parameters	552
XV-6	A Synthesis of Water Wave Theories	555
	XV-6.1 A Flow Chart for the Great Family of Water Waves	555
	XV-6.2 A Plan for the Study of Water Waves	559
XVI	PERIODIC SMALL AMPLITUDE WAVE THEORIES	561
XVI-1	Basic Equations and Formulation of a Surface Wave Problem	561
	XVI-1.1 Notation and Continuity	561
	XVI-1.2 The Momentum Equation	563
	XVI-1.3 Fixed Boundary Condition	563
	XVI-1.4 Free Surface Equations	564

	XVI-1.5	The Free Surface Condition in the Case of Very Slow Motion	565
	XVI-1.6	Formulation of a Surface Wave Problem	567
	XVI-1.7	Principle of Superposition	569
	XVI-1.8	Harmonic Motion	569
	XVI-1.9	Method of Separation of Variables	570
XVI-2	Wave Motion Along a Vertical		572
	XVI-2.1	Integration Along a Vertical	572
	XVI-2.2	Introduction of the Free Surface Condition	573
XVI-3	Two-dimensional Wave Motion. Linear Solution		575
	XVI-3.1	Wave Equation	575
	XVI-3.2	Integration of the Wave Equation	576
	XVI-3.3	Physical Meaning - Wave Length	578
	XVI-3.4	Flow Patterns	579
	XVI-3.5	The Use of Complex Number Notation	583
XVI-4	Three-dimensional Wave Motion		585
	XVI-4.1	Three-Dimensional Wave Motion in a Rectangular Tank	585
	XVI-4.2	Cylindrical Wave Motion	587
	XVI-4.3	Wave Agitation in a Circular Tank	591
XVI-5	Non-linear Theory of Waves		591
	XVI-5.1	General Process of Calculation	591
	XVI-5.2	Free Surface Conditions	592
	XVI-5.3	Method of Solutions	593
	XVI-5.4	The Bernoulli Equation and the Rayleigh Principle	594
XVI-6	Energy Flux and Group Velocity		596
	XVI-6.1	Energy Flux	596
	XVI-6.2	Energy per Wave Length and Rate of Energy Propagation	597
	XVI-6.3	Group Velocity	598
	XVI-6.4	Wave Shoaling	599

XVI-7	A Formulary for the Small Amplitude Wave Theory	601
XVI-8	Differences Between Water Waves and Unsteady Flow Through Porous Media	609
	XVI-8.1 A Review of the Basic Assumptions	609
	XVI-8.2 Dynamic Conditions	610
	XVI-8.3 Kinematic Condition	612
	XVI-8.4 Form of Solutions	616
XVII	OPEN CHANNEL HYDRAULICS AND LONG WAVE THEORIES	624
XVII-1	Steady Flow in an Open Channel	624
	XVII-1.1 Uniform Flow, Normal Depth, and Critical Depth	624
	XVII-1.2 Specific Energy, Specific Force, and Critical Depth	629
	XVII-1.3 Tranquil Flow and Rapid Flow	634
XVII-2	Gradually Varied Flow	637
	XVII-2.1 Basic Equations for Gradually Varied Flow	637
	XVII-2.2 Backwater Curves	640
	XVII-2.3 Rapidly Vaired Flow - Effect of Curvature	643
XVII-3	The Long Wave Theory; Assumptions and Basic Equations	645
	XVII-3.1 Momentum Equations	645
	XVII-3.2 Equation of Barré de St. Venant	649
	XVII-3.3 The Insertion of Path Curvatures Effect - Boussinesq Equation	651
	XVII-3.4 The Continuity Equation	653
XVII-4	The Linear Long Wave Theory	655
	XVII-4.1 Basic Assumptions	655
	XVII-4.2 The Linear Long Wave Equations	656
	XVII-4.3 Harmonic Solution - Seiche	656
XVII-5	The Numerical Methods of Solution	657
	XVII-5.1 The Method of Characteristics	657

	XVII-5.2	Tidal Bore	665
	XVII-5.3	The Direct Approach to Numerical Solutions	668
XVII-6	On Some Exact Steady State Solutions		673
	XVII-6.1	Monoclinal Waves	673
	XVII-6.2	Solitary Wave Theory	675
XVIII	WAVE MOTION AS A RANDOM PROCESS		684
XVIII-1	Harmonic Analysis		684
	XVIII-1.1	The Concept of Representation of Sinusoidal Waves in the Frequency Domain	684
	XVIII-1.2	Review of Fourier Analysis	687
	XVIII-1.3	Fourier Analysis in Exponential Form	690
	XVIII-1.4	Random Functions	691
	XVIII-1.5	Auto-correlation	692
	XVIII-1.6	Auto-correlation to Energy (or Variance) Density Spectrum	693
XVIII-2	Probability for Wave Motions		699
	XVIII-2.1	The Concepts of Probability Distributions and Probability Density	699
	XVIII-2.2	The Probability Density of the Water Surface Ordinates	700
	XVIII-2.3	Probability for Wave Heights	701
	XVIII-2.4	Probability for Wave Periods	704
	XVIII-2.5	Probability for Sub-surface Velocity and Accelerations	706
XVIII-3	Discussion of Non-linear Problems		708
	XVIII-3.1	Effects of Non-linearity on Probability Distributions	708
	XVIII-3.2	Effects of Non-linearities on Spectra and Spectral Operations	709
NOTATION			717

PREFACE

This book is the first part of lecture notes that the author has presented as Special Lecturer in Graduate Studies of the Civil Engineering Department at Queen's University, Kingston, Ontario in 1959-60. These lecture notes have now been revised for publication.

The primary purpose of this book is to present the foundations and the essential aspects of the theoretical approach to hydrodynamics and water waves at a relatively simple level. It is hoped that it can be of help to hydraulic and coastal engineers who want to learn, or revise, the theoretical aspects of their profession.

This book can also be considered as the text for a course in applied mathematics as well as the fundamentals of hydraulic and coastal engineering.

In the first case, the students will find how to make use of their mathematical equipment in a field of physics particularly suitable to mathematical treatments. Since they may have some difficulty in representing a physical phenomenon by a mathematical model, a great emphasis has been given in this book to the physical concepts at the foundation of hydrodynamics. In the case of students with an undergraduate training in civil engineering, the difficulty may be of a mathematical nature. Their first contact with hydraulics has been on an essentially practical basis. They may be discouraged in attempting the study of such books as Hydrodynamics by Lamb, which remains the bible of hydrodynamicists. Hence the mathematical difficulties

have been introduced slowly and progressively. Also, the emphasis on the physical approaches has made it possible to avoid mathematical abstractions so that a concrete support may be given to equations.

Finally, the author has tried to make this book self-contained in the sense that a practicing engineer who wants to improve his theoretical background can study hydrodynamics by himself without following lectures. Too often articles in engineering journals present some discouraging aspects to practicing engineers and the most valuable messages are lost or cannot reach a wide audience with the exception of a few specialists. It is felt that the learning of some basic theories will help hydraulic engineers to keep abreast of and participate in new developments proposed by theorists.

Considering that a good assimilation of the basis is essential before further study, great care has been taken to develop a clear understanding, both mathematically and physically, of the fundamental concepts of theoretical hydraulics. In particular, great attention has been given to emphasizing the physical meaning of all the mathematical terms. The introduction of mathematical simplifications and assumptions, often based on physical considerations, has also been developed by examples. The mathematical difficulties have been cleared up by introducing them progressively and by developing all the intermediate calculations. Also, all the abstract concepts of theoretical hydraulics have been explained as concretely as possible by use of examples. It will appear that the first chapter is the easiest to understand, and it is assumed that the mathematical background increases as the student

progresses toward the end of the book.

Since in hydraulics the various subjects often appear as a succession of different mathematical recipes rather than as a unique and logical subject, the succession of the various chapters have been chosen in order to build up a structure as logical and as deductive as possible.

Part I (Volume I) deals with the establishment of the fundamental differential equations governing the flow motion in all possible cases. The possible approximations are also indicated. Then Part II (Volume I) deals with the method of integrations and the mathematical treatments of these equations. Integrations of general interest, and integrations in some typical particular cases are presented. Finally, Part III (Volume II) is devoted to free surface flow motion and water wave theories, as one of the most important topics of hydrodynamics.

It is pointed out that the treatment of motion of compressible fluid has been judged beyond the scope of this book, with a few exceptions. Also, all the calculations are presented in a Cartesian (or cylindrical) system of coordinates. Vectorial and tensorial operations have been avoided in order to minimize the necessary mathematical background. However, vectorial and tensorial notations are slowly introduced for sake of recognition in the literature. Finally, capillary effects are not dealt with in this book.

It is hoped that this book will give to students gifted in mathematics the taste of applying their capabilities to the study of fluid motion and dynamical oceanography. It is hoped also that it will instill in engineering

students the desire for further study in hydrodynamics and mathematics. It is also hoped that the book will be of great help to hydraulic and coastal engineers and physical oceanographers who want to reinforce their knowledge of the fundamentals.

INTRODUCTION

Hydrodynamics is the science which deals with the motion of liquid in the macroscopic sense. It is essentially a field which is regarded as applied mathematics because it deals with the mathematical treatments of basic equations for a fluid continuum obtained on a purely Newtonian basis. It is also the foundation of hydraulics which, as an art, has to compromise with the rigorous mathematical treatments because of non-linear effects, inherent instability, turbulence, and the complexity of "boundary conditions" encountered in engineering practice.

The purpose of this introduction will be to give to the beginning hydrodynamicist a summary of what to expect in that book. Indeed, the first time reader should keep the final objective constantly in mind. He has to be aware that the road may be long, but each step leads closer to the final goal.

In most cases, a problem in hydrodynamics consists in determining the flow pattern (particle velocity) and the forces (pressure). The first step consists in determining the boundary conditions, i.e., in determining the limit within which the flow is going to take place. The two unknowns (velocity and pressure or free surface elevation) require two equations. The essential purpose of the first part of this book is the establishment of these two equations in all the possible cases: they are the continuity relationship and the momentum equation.

The continuity relationship simply expresses the conservation of matter. The establishment of the momentum equation is more complex.

Each motion of elementary particle of fluid gives rise to inertial forces which equal the applied forces. A deep analysis of the elementary motion of fluid particle is presented. It is shown how the assumption of irrotationality simplifies considerably the research of a theoretical solution. The inertial forces corresponding to each kind of elementary motion are established. Then the mathematical expressions for the forces applied to an elementary fluid particle are presented. They are the gravity, the pressure, and the friction forces (capillary forces are not considered in this book). The equality between these inertial forces and the applied forces gives the momentum equation, so called in this case the Navier Stokes equation, although this name also applies for the more general case of compressible fluid with additional terms. It is seen how this Navier Stokes equation is transformed in the case of a turbulent flow for the average motion. Also, it is seen how the Navier Stokes equation is transformed and simplified for the study of flow through porous medium.

All the basic equations of the motion are now established. Part II of the book is essentially devoted to presenting some basic mathematical treatments of these equations and to establish the most fundamental relationships of hydrodynamics. The momentum equation, integrated along a streamline or in the case of an irrotational motion, leads to the well-known Bernoulli equation exactly.

It is shown that the case of steady two-dimensional irrotational motion is particularly suitable for exact integration. Some basic examples of flow patterns are obtained by satisfying the continuity principle and the assumption of irrotationality only. Then the pressure is obtained afterward by a mere application of the Bernoulli equation where the particle velocity is known.

It is shown according to which approximations the Bernoulli equation can be applied to a stream tube (a pipe) where the flow motion is rotational and turbulent. It is shown also how the integration of the Navier Stokes equation over a finite mass of fluid leads to the momentum theorem. In the case of steady flow, the momentum theorem is a master key in hydraulics because it can be applied without taking into account the characteristics of the flow within the limit of the considered mass. This fortunate situation makes the integration process extremely simple and powerful.

This part will be incomplete without analyzing the flow motion near the boundary. There the friction force is important, the flow is rotational, and a deep analysis of the flow pattern requires integration of the Navier Stokes equation in a domain where the previous considerations and simplifications do not apply.

A Newtonian or fully deterministic approach is rapidly limited. The hydrodynamicist can only count upon experimental results for substantiating the theory.

In Part III, the basic theorems and mathematical methods which have been described in Part II are applied to a special and very important family of flow motions. They are the steady and unsteady free surface flows.

Part III of this book deals with the hydrodynamic aspects of the so-called "water waves" and open channel hydraulics. A survey of the different kinds of water waves and definition is given first. Then an analysis of the two essential families of water waves, namely the small

wave theory and the long wave theory, is given. The limit of applicability of these various theories is presented.

Finally, a modern treatise on water waves will not be complete if some elementary motions on wave spectrum are not included. This is the purpose of the last section of this book.

Now that the reader has been quickly briefed, it is time to make a start by presenting the fundamental concepts of hydrodynamics.

PART ONE

ESTABLISHMENT OF THE BASIC EQUATIONS WHICH GOVERN FLOW MOTION

CHAPTER I

THE BASIC CONCEPTS AND PRINCIPLES OF THEORETICAL HYDRAULICS

I-1 BASIC CONCEPTS OF THEORETICAL HYDRAULICS

I-1.1 DEFINITION OF AN ELEMENTARY PARTICLE OF FLUID

Studies of theoretical fluid mechanics are based on the concept of an elementary mass or particle of fluid. This particle has no well defined existence. It may even be considered as a "corpus alienum," a foreign matter in the mechanics of a continuum. But it is a concrete support in order to understand the physical meaning of differential equations governing the flow motion.

Just as the fundamental concepts of the theoretical mechanics of solid matter are based on the mechanics of a so-called "material point", the basis of theoretical fluid mechanics rests on the mechanics of an elementary mass of fluid. Such an elementary mass of fluid, in common with the material point in the kinematics of solid body, is assumed to be either infinitely small or small enough to consider that all parts of this element have the same velocity of translation $\vec{V}$ and in general the same density ρ.

This elementary fluid particle is assumed to be homogeneous, isotropic and continuous in the macroscopic sense. No account is taken of the molecular pattern nor of the molecular and Brownian motions within

the particle -- a subject dealt with in the kinetic theory of fluids.

I-1.2 THE TWO PARTS OF THEORETICAL HYDRAULICS

The laws of mechanics of a solid body system (a rotating disk, for example) are obtained by the integration of the laws of mechanics for a "material point" with respect to the area or the volume of the system under consideration.

Similarly, the laws of fluid mechanics used in engineering practice are obtained by integration - - exact or approximate - - of the laws governing the behavior of a fluid particle along a line or throughout an area or a volume. Hence, studies in hydrodynamics may be divided into two different parts.

I-1.2.1 The first part consists of establishing the general differential equations which govern the motion of an elementary particle of fluid. The fluid may be assumed either perfect (without friction forces) or actual. The flow may be either laminar or turbulent. Also included in this part is the study and appreciation of the physical significance of the terms constituting the basic equations.

I-1.2.2 The second step involves the study of different mathematical treatments and integration of these basic differential equations. Practical general relationships, such as the well-known Bernoulli equation, may thereby be deduced. The differential equations may also be integrated for a number of particular simple cases, but the solutions are valid only for these cases.

I-1.3 RELATIONS BETWEEN FLUID PARTICLES

In a solid material, points in a system (on a disk, for example) do not change their relative position (except for elastic effects which have a law governing their behavior).

On the other hand, fluid particles may be deformed and each particle may have a particular motion which differs quite markedly from the motion of other particles. The relations between fluid particles are governed by pressure forces, friction forces, and capillary forces. However, in this book capillary effects will not be considered.

I-1.4 BASIC ASSUMPTION ON FRICTION FORCES

In theoretical hydrodynamics, the friction force per unit area or shear stress τ is assumed to be either zero, in the case of an "ideal" or perfect fluid, or proportional to a coefficient of viscosity μ.

The shear stress τ is a scalar. The set of shear stresses at a point constitutes a tensor. The significance of this statement is developed in Chapter V. It is now sufficient to know that in the case of unidirectional flow the shearing stress along a plane parallel to the flow direction is:

$$\tau = \mu \frac{dV}{dn}$$

where n is a distance measured perpendicularly to the velocity vector.

Thus hydrodynamics is primarily concerned with "Newtonian fluid" defined by the fact that its viscous stress tensor depends linearly, isotropically, and covariantly on the rate of strain or derivatives of velocity components. It does not deal with "plastic" fluids where the coefficient μ

has to be replaced by a function of the intensity or duration of the shear.

I-2 STREAMLINE, PATH, STREAKLINE AND STREAM TUBE

I-2.1 NOTATION

Consider, in a Cartesian rectangular system of coordinates OX, OY, OZ, the point A(x, y, z). (See Figure I-1.) The edges of an infinitely small fluid particle A are dx, dy, dz . Its volume is

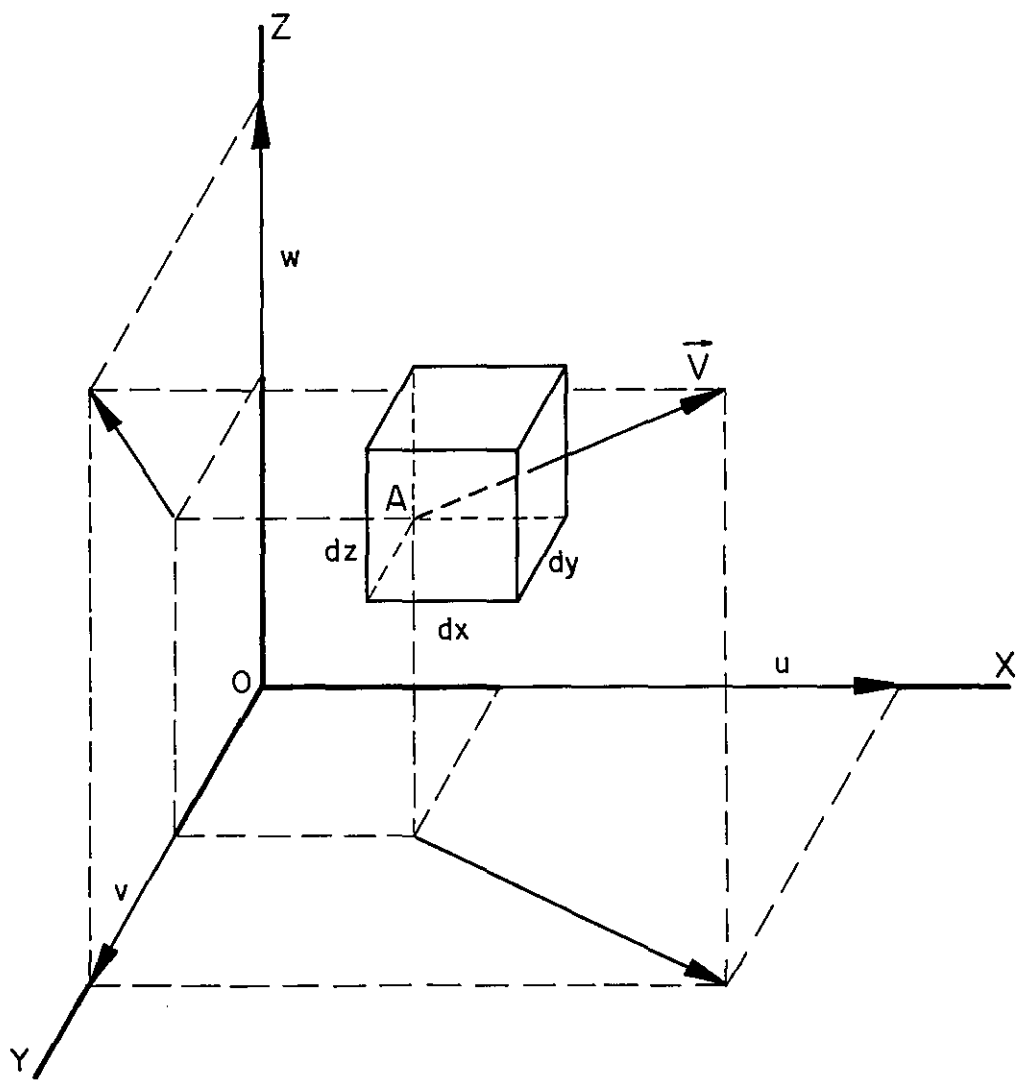

FIGURE I-1
NOTATION

dx dy dz and its weight ϖ dx dy dz or ρg dx dy dz. ϖ is the specific weight and g the gravitational acceleration.

The pressure at point A is p. p is a pseudo-scalar quantity which is completely specified by its magnitude and the condition that it is always exerted perpendicular to the considered surface (see Section V-3.1). p is a function of the space coordinates of A(x, y, z) and time t; i.e., $p = f(x, y, z, t)$. The corresponding force is a vector quantity, specified by its intensity and its direction. Its direction is normal to the area on which the pressure is exerted. The gradient of p ($\overrightarrow{\text{grad}}\, p$), or its variation with respect to space, is also a vector quantity. The components of $\overrightarrow{\text{grad}}\, p$ along the three coordinate axes OX, OY, OZ, are given by the variation of p with respect to x, y, z respectively, i.e., $\frac{\partial p}{\partial x}, \frac{\partial p}{\partial y}, \frac{\partial p}{\partial z}$.

The velocity of fluid particles at A is $\vec{V}$. The components of $\vec{V}$ along the three coordinate axes OX, OY, OZ, are u, v, and w respectively, such that $\vec{V} = \vec{u} + \vec{v} + \vec{w}$. Since the three-axis system of reference is rectangular, the magnitude of the velocity is given by $V^2 = u^2 + v^2 + w^2$. V is a scalar quantity defined by its intensity only like the pressure p whereas $\vec{V}$ is a vector quantity specified by its direction and intensity, i.e., a tensor of rank one. $\vec{V}$ and its components u, v, and w are also functions of space coordinates of A(x, y, z) and time t: $\vec{V}(x, y, z, t)$.

I-2.2 DISPLACEMENTS OF A FLUID PARTICLE

The displacement dS of a fluid particle is defined by the

vectorial equality that is valid both in intensity and in direction: $\vec{dS} = \vec{V}\,dt$, which may be written more specifically in terms of the displacements in each of the three Cartesian coordinate directions as follows:

$$dx = u\,dt$$
$$dy = v\,dt$$
$$dz = w\,dt$$

I-2.3 STREAMLINE

A streamline is defined as a line which is tangential at every point to the velocity vector at a given time t_o.

Streamlines may be obtained by photographing with a short exposure a number of bright particles in a random suspension in the fluid (Figure I-2). Every particle photographs as a small straight segment defining a velocity vector. Each line tangential to these small segments is a streamline.

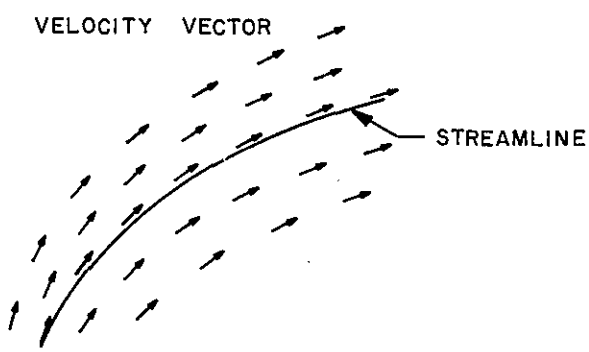

FIGURE I-2
STREAMLINES OBTAINED BY SHORT EXPOSURE PHOTOGRAPHY OF VARIOUS PARTICLES IN A RANDOM DISTRIBUTION

The equations $dx = u\,dt$, $dy = v\,dt$, and $dz = w\,dt$, when expressed in a more significant form at time t_o as follows:

$$\frac{dx}{u(x,\ y,\ z,\ t_o)} = \frac{dy}{v(x,\ y,\ z,\ t_o)} = \frac{dz}{w(x,\ y,\ z,\ t_o)}$$

yield the mathematical definition of a streamline. These equalities express the fact that the velocity vector $\vec{V}$ (u, v, w) is tangential to the displacement of the particle $\vec{dS}$ (dx, dy, dz) at time t_o as is shown for a two dimensional motion by Figure I-3 where $dx/u = dy/v$, or $v\,dx - u\,dy = 0$.

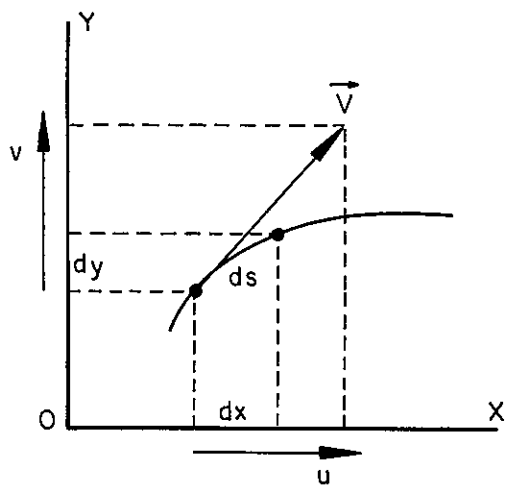

FIGURE I-3
DEFINITION OF A STREAMLINE IN
A TWO DIMENSIONAL MOTION

Streamlines do not cross, except at point of theoretically infinite velocity (see Figures XI-6 and XI-7) and at stagnation and separation points of a body where the velocity is zero (see Chapter XIV).

Fixed solid boundaries and steady free surface are streamlines. Moving boundaries and unsteady free surface are not streamlines. Some cases of two-dimensional unsteady flow such as periodic gravity waves, or a moving body through a fluid sometimes can be transformed into a steady flow by adding a velocity compon nt equal to the wave or the body ve locity. The flow patterns are then similar to the patterns which would be seen by an observer or a camera moving with the wave or at the body velocity.

I-2.4 PATH

The path of a fluid particle is defined by its position as a function of time. It may be determined by photographing a bright particle with a long exposure. (Figure I-4)

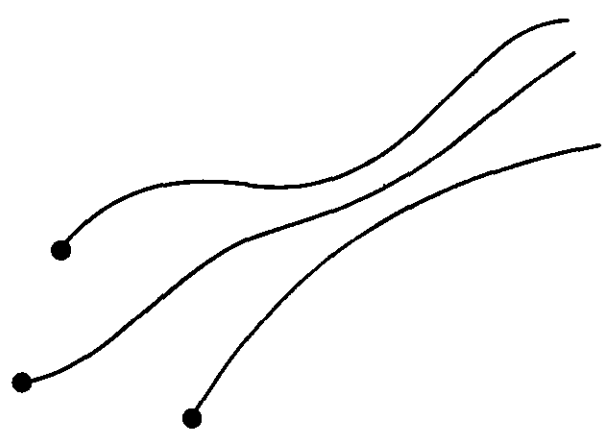

FIGURE I-4

PATHS: OBTAINED BY LONG EXPOSURE PHOTOGRAPHY OF THE SAME PARTICLES

The path line is tangential to the streamline at a given time t_o. However, the time has to be included as a variable for defining a path. Hence, the path lines are defined mathematically as:

$$\frac{dx}{u(x, y, z, t)} = \frac{dy}{v(x, y, z, t)} = \frac{dz}{w(x, y, z, t)} = dt$$

I-2.5 STREAKLINE

A streakline is given by an instantaneous shot photographing a number of small bright particles in suspension which were introduced into the fluid at the same point at regular intervals of time. (Figure I-5)

I-2.6 STREAM TUBES

An elementary flow channel bounded by an infinite number of streamlines on the locus of a closed curve is known as a stream tube. (Figure I-6)

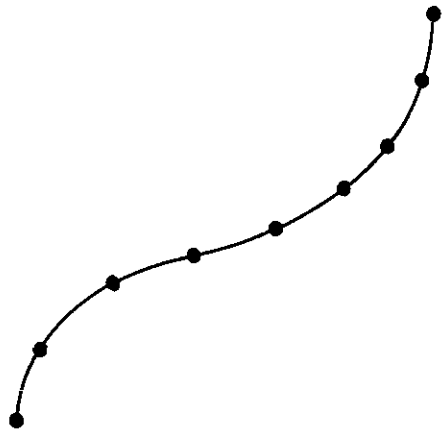

FIGURE I-5
STREAKLINE OBTAINED BY INSTANTANEOUS PHOTOGRAPHY OF VARIOUS PARTICLES COMING FROM THE SAME POINT

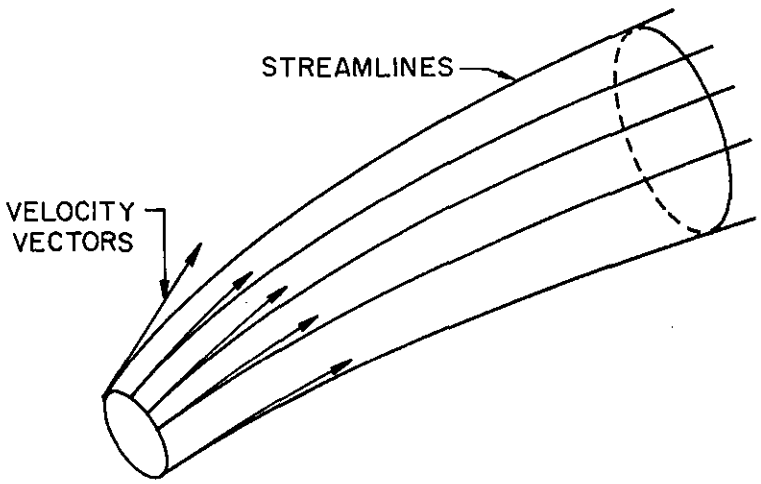

FIGURE I-6
STREAM TUBE

I-2.7 STEADY AND UNSTEADY FLOW

Streamlines, paths, streaklines and stream tubes are the same in steady flow, which does not depend upon time. They are different in unsteady flow, that is flow changing with respect to time. Turbulent flow is always an unsteady flow; however, it will be seen that often the mean motion with respect to time of a turbulent flow may be considered as steady. Then streamlines, paths and streaklines of the mean motion are the same. (See Chapter VII)

Figures I-7 and I-8 illustrate these definitions in some cases of unsteady motion.

I-3 METHOD OF STUDY

The study of the motion of a fluid can be done in two ways: the method of Lagrange and the method of Euler.

I-3.1 LAGRANGIAN METHOD

The Lagrangian method may be used to answer the question: What occurs to a given particle of fluid as it moves along its own path?

This method consists of following the fluid particles during the course of time and giving the paths, velocities and pressures (and in the case of a compressible fluid, densities and temperature) in terms of the original position of the particles and the time elapsed since the particles occupied their original position.

If the initial position of a given particle at time t_o is x_o, y_o, z_o , a Lagrangian system of equations gives the position x, y, z at the instant t as:

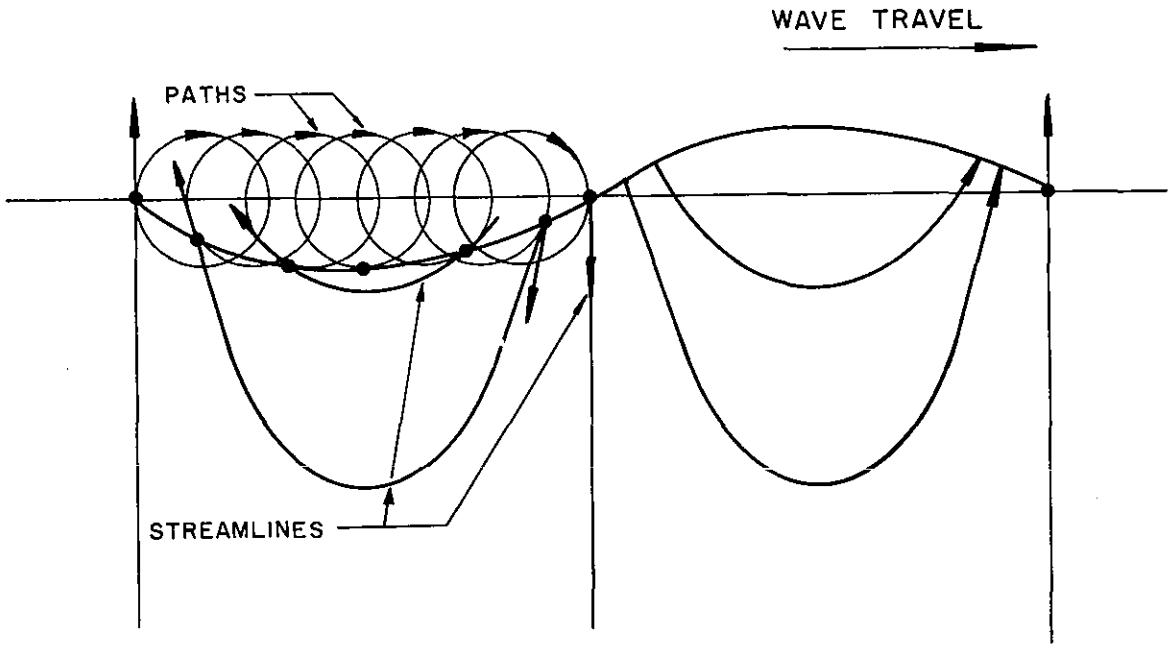

FIGURE I-7
PERIODICAL GRAVITY WAVES IN DEEP WATER

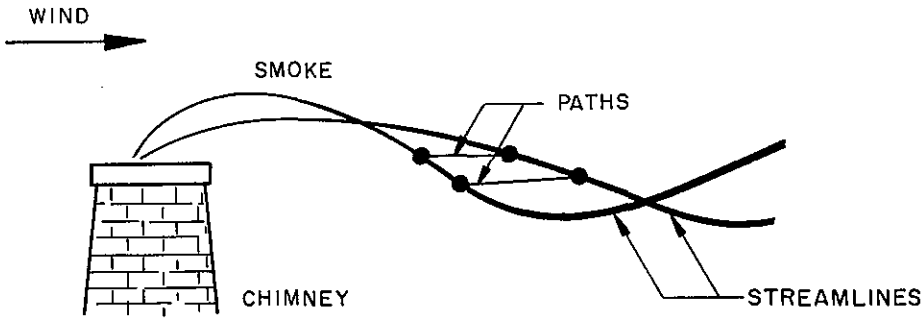

FIGURE I-8
SMOKE IN THE WIND

$$x = F_1(x_o, y_o, z_o, t)$$

$$y = F_2(x_o, y_o, z_o, t)$$

$$z = F_3(x_o, y_o, z_o, t)$$

In practice this method is seldom used in hydrodynamics. One notable use of Lagrangian coordinates is in some theories inherent to periodical gravity waves.

The velocity and acceleration components at point (x_o, y_o, z_o) are then obtained by a simple partial differentiation with respect to time, such that

$$u = \left.\frac{\partial x}{\partial t}\right|_{x_o, y_o, z_o}$$

$$v = \left.\frac{\partial y}{\partial t}\right|_{x_o, y_o, z_o}$$

$$w = \left.\frac{\partial z}{\partial t}\right|_{x_o, y_o, z_o}$$

Similarly, the acceleration components are $\frac{\partial^2 x}{\partial t^2}, \frac{\partial^2 y}{\partial t^2}, \frac{\partial^2 z}{\partial t^2}$

I-3.2 EULERIAN METHOD

The Eulerian method may be used to answer the question: What occurs at a given point in a space occupied by a fluid in motion? This is the most frequent form of problem encountered in hydrodynamics.

This method gives at a given point $P(x, y, z)$ the velocity $V(u, v, w)$ which is tangent to the streamline, and the pressure p (and in the case of a compressible fluid, density and temperature) as

functions of time t. The Eulerian system of equations has the following form:

$$\vec{V} = F(x, y, z, t)$$

or

$$\begin{cases} u = f_1(x, y, z, t) \\ v = f_2(x, y, z, t) \\ w = f_3(x, y, z, t) \end{cases}$$

and

$$p = F_1(x, y, z, t)$$

The acceleration components are now obtained by total differentiation of u, v, w with respect to t. This subject will be developed in Section IV-1.3.

I-3.3 RELATIONSHIPS BETWEEN THE TWO APPROACHES

It is possible to pass from a motion defined by a system of Lagrangian equations to the same motion defined by a system of Eulerian equations and vice-versa by the relationships:

Eulerian Equations from Lagrangian Equations

$$\begin{cases} \vec{V} = \dfrac{ds}{dt} \\ \text{or} \\ u = \dfrac{dx}{dt} \\ v = \dfrac{dy}{dt} \\ w = \dfrac{dz}{dt} \end{cases}$$

Lagrangian Equations from Eulerian Equations

$$\begin{cases} \vec{S} = \displaystyle\int_{t_o}^{t} \vec{V}\, dt \\ \text{or} \\ x = \displaystyle\int_{t_o}^{t} u\, dt \\ y = \displaystyle\int_{t_o}^{t} v\, dt \\ z = \displaystyle\int_{t_o}^{t} w\, dt \end{cases}$$

In the following, the Eulerian system of coordinates is used.

I-3.4 AN EXAMPLE OF FLOW PATTERN

Let us consider a Eulerian system of coordinates where the motion is represented by the velocity components (see I-3.2):

$$u = f_1(x, z, t) = \frac{dx}{dt} = \frac{H}{2} k e^{-mz} \cos(kt - mx)$$

$$w = f_3(x, z, t) = \frac{dz}{dt} = -\frac{H}{2} k e^{-mz} \sin(kt - mx)$$

The equations for the streamlines are obtained from the differential equation (see I-2.3)

$$\frac{dx}{u(x, z, t_o)} = \frac{dz}{w(x, z, t_o)}$$

i.e.,

$$\frac{dx}{k\frac{H}{2} e^{-mz} \cos(kt_o - mx)} = \frac{dz}{-k\frac{H}{2} e^{-mz} \sin(kt_o - mx)}$$

or

$$dz = -\tan(kt_o - mx)\, dx$$

i.e., after integration and taking $t_o = 0$, for example, it is found that

$$e^{mz} \cos mx = \text{constant}$$

It can be verified by varying the value of the constant that the streamlines formed a general pattern as illustrated in Figure I-7.

The paths (or particle orbits) are defined by the differential equation (see I-2.4):

$$\frac{dx}{u(x, z, t)} = \frac{dz}{w(x, z, t)} = dt$$

where t is now variable, i.e.,

$$dx = k\frac{H}{2} e^{-mz} \cos(kt - mx)\, dt$$

and a similar equation for z. Then, the expressions for $x = F_1(x_o, z_o, t)$ and $z = F_3(x_o, z_o, t)$ may be obtained by integration. In this particular case (linear theory), it is assumed that $x - x_o$ and $z - z_o$ remain small, in such a way that x_o and z_o can be considered as the coordinates of the particle when the fluid is at rest. Then, squaring $(x - x_o)$ and $(z - z_o)$ and adding in order to eliminate t, one finally obtains:

$$(x - x_o)^2 + (z - z_o)^2 = \left[\frac{H}{2} e^{-mz_o}\right]^2$$

The equation of circle of radius $\frac{H}{2} e^{-mz}$ is recognized. It is seen that the paths are circular and the radius decreases rapidly with the depth z_o.

I-4 BASIC EQUATIONS

I-4.1 THE UNKNOWNS IN FLUID MECHANICS PROBLEMS

In the Eulerian system of coordinates, the motions are completely known at a given point x, y, z if one is able to express $\vec{V}$ and p as functions of space and time: $\vec{V} = f(x, y, z, t)$ and $p = F(x, y, z, t)$.

Hence, to solve problems in hydrodynamics two equations are necessary, one of them being vectorial. If $\vec{V}$ is expressed by u, v, and w, four scalar or ordinary equations are necessary.

In free surface flow problems, the free surface elevation $\eta(x, y, z, t)$ around the still water level, or the water depth $h(x, y, z, t)$, is also unknown. However, in that case the pressure p is known and equal to the atmospheric pressure.

In the case of gases, two more unknowns need to be considered, namely the density ρ and the absolute temperature T. Hence, to solve problems in the most general cases of fluid mechanics, four equations are necessary, one of them being vectorial, or six ordinary equations, if $\vec{V}$ is expressed by u, v, w.

In hydraulics, the basic equations are given by the physical principles of continuity and conservation of momentum. In the case of compressible fluid, the equation of state and the principle of the conservation of energy must be added.

The reduction of a problem to the solution of two (or four) unknown variables does not occur for trivial reasons but as a result of several important arguments and assumptions. So a number of phenomenological functions are assumed to be known. For example, it is assumed

that the fluid is viscous and Newtonian, i.e., the stress tensor is symmetric. The fluid obeys the law of conduction of Fourier. Also, a number of coefficients such as heat conductivity, specific heat, viscosity, are supposed to be known functions of the other unknown variables, such as ρ and T.

I-4.2 PRINCIPLE OF CONTINUITY

The continuity principle expresses the conservation of matter; i.e., fluid matter in a given space cannot be created or destroyed. In the case of an incompressible homogeneous fluid, the principle of continuity is expressed by the conservation of volume, except in the special case of cavitation where partial voids appear.

The continuity principle gives a relationship between the velocity V, the density ρ, and the space coordinates and time. If ρ is constant (in the case of an incompressible fluid), it gives a relationship between the components of $\vec{V}$ which are u, v, w and the coordinates, which are x, y, z.

It will be seen that $\vec{V}$ may be found in some cases of flow under pressure, independent of the absolute value for p, from the principle of continuity alone, but p will always be a function of $\vec{V}$ except at the free surface.

I-4.3 THE MOMENTUM PRINCIPLE

The momentum principle expresses the relationship between the applied forces $\vec{F}$ on a unit of volume of matter of density ρ and the inertia forces $\rho \frac{d\vec{V}}{dt}$ of this unit of volume of matter in motion. The inertia forces are due to the natural tendency of bodies to resist any change in their motion. It is Newton's first law that "every body continues in its state of rest or uniform motion via a straight line unless it is compelled by an external force to change that state". The well-known Newtonian relationship is derived from his second law: "The rate of change of momentum is proportional to the applied force and takes place in the direction in which the force acts". $\vec{F} = m \frac{d\vec{V}}{dt}$

In fluid mechanics this equation takes particular forms which take into account the fact that the fluid particle may be deformed. These equations will be studied in detail. For an incompressible fluid, the integration of the momentum equation with respect to distance gives an equality of work and energy, expressing a form of the conservation of energy principle.

If $\vec{V}$ is expressed by u, v, w, the vectorial relationship of Newton's second law has to be expressed along the three axes, which gives three equations: $F_x = \rho \frac{du}{dt}$, $F_y = \rho \frac{dv}{dt}$, $F_z = \rho \frac{dw}{dt}$, F_x, F_y, F_z being the components of F along the three coordinates' axes respectively.

I-4.4 EQUATION OF STATE

When considering a compressible fluid, one has to use two other equations with the above principles. These two equations are: the equation of state and the equation expressing the conservation of energy.

The equation of state expresses the relationship which always exists between pressure p, density ρ, and absolute temperature T. For a perfect gas, this equation has the very simple form

$$\frac{p}{\rho g R T} = 1 \quad \text{or} \quad \frac{p}{\varpi R T} = 1$$

where R is the universal gas constant ($R = 53.3$ ft/$^{\circ}$R for air).

In a more general case of a real gas, it may take the form $\frac{p}{\rho g R T} = 1 + \alpha(T)\,\rho + \beta(T)\,\rho^2 + \ldots$ where α and β are functions of the absolute temperature T only. In the case of an incompressible fluid, the equation of state is simply ρ = constant. The temperature can then be treated as an independent variable having an (experimentally) known significant influence on the coefficient of viscosity only.

I-4.5 PRINCIPLE OF CONSERVATION OF ENERGY

The next equation expresses the conservation of the total energy (internal energy and mechanical energy). It is the first law of thermodynamics.

The following equation is derived from this law in the particular case of an adiabatic flow -- that is, where no heat is added or removed from the fluid mass: $\frac{p}{\rho^k}$ = constant, where k is the adiabatic constant defined as the ratio of the specific heat at constant pressure C_p to the specific heat at constant volume C_v.

In the case of isothermal flow at constant temperature which may necessitate the removal or addition of heat from/to the fluid mass, $\frac{p}{\rho}$ = constant.

Inasmuch as hydrodynamic problems along are being considered

in this book, it is not necessary to further consider the equation of state and the equation which expresses the conservation of total energy. The density ρ will be supposed to be known and constant and the temperature T a variable without influence upon the phenomenon under consideration. However, it is evident that the dissipation of energy by viscous forces may create a (small) elevation of temperature which in turn modifies the characteristics of the fluid. In general, these effects are of secondary importance in hydrodynamics, and in particular, the coefficient of viscosity μ is considered as a known constant.

I-5 BOUNDARY CONDITIONS

It is evident that a general solution of the system of equations described above does not exist, but in many particular cases solutions can be found when the boundary conditions are specified. There are three main kinds of boundary conditions:

1. At a free surface where the pressure is known and generally equal to atmospheric pressure. The cases of wind-water wave interaction, impulses on the free surface, waves of density in a stratified liquid... are special cases.
2. At a solid boundary, since the fluid cannot pass through or escape from the boundary.
3. At infinity when the motion tends to a known value. In such a case, the known conditions at infinity are considered as "boundary" conditions.

I-5.1 FREE SURFACE

At the free surface the pressure is known, but the location of this free surface with respect to horizontal datum level is unknown in general. So two conditions must be specified: a dynamic condition, stating the value of pressure, and a kinematic condition, stating that the particle at the free surface remains at the free surface.

Since p is a constant at any time, the total variation of $p(x, y, z, t)$ is zero; that is,

$$dp = \frac{\partial p}{\partial x} dx + \frac{\partial p}{\partial y} dy + \frac{\partial p}{\partial z} dz + \frac{\partial p}{\partial t} dt = 0$$

which could be written by dividing by dt :

$$\frac{dp}{dt} = \frac{\partial p}{\partial t} + \frac{\partial p}{\partial x}\frac{dx}{dt} + \frac{\partial p}{\partial y}\frac{dy}{dt} + \frac{\partial p}{\partial z}\frac{dz}{dt} = 0$$

Introducing $u = \frac{dx}{dt}$, $v = \frac{dy}{dt}$, $w = \frac{dz}{dt}$, (see I-2.2) the free surface limiting condition becomes in the most general case:

$$\frac{\partial p}{\partial t} + u\frac{\partial p}{\partial x} + v\frac{\partial p}{\partial y} + w\frac{\partial p}{\partial z} = 0$$

This condition, involving a force, has to be introduced in the equation expressing the momentum principle. Hence $\vec{V}$ cannot be found independently from the momentum equation in the case of free surface flow.

The kinematic condition will be developed in Section XVI-1.4. For the time being, it is sufficient to know that if

$$z = \eta(x, y, t)$$

is the equation of the free surface, the kinematic condition is:

$$w = \frac{\partial \eta}{\partial t} + u\frac{\partial \eta}{\partial x} + v\frac{\partial \eta}{\partial y} .$$

I-5.2 SOLID BOUNDARIES

I-5.2.1 At fixed solid boundaries, the velocity is reduced to zero because of the friction: $\vec{V} = 0$. This condition has to be introduced in the continuity equation, and since a friction force is involved, must also be introduced in the momentum equation. If the fluid is assumed to be perfect (or ideal), only the component perpendicular to the boundary is zero, and the velocity $\vec{V}$ is tangential to the boundary. This condition has to be introduced primarily in the continuity relationship. It does not involve a force but a continuity statement: the fluid cannot pass through or escape from the boundary (unless there is cavitation).

For instance, the boundary conditions in the case shown in Figure I-9 are:

$$u = 0 \text{ for } x = 0 \text{ and } x = x_1$$

$$w = 0 \text{ for } z = 0$$

$$\text{and } p = \text{constant for } z = z_1$$

More generally, if $F(x, y, z) = \text{constant}$ is the equation of the boundary, the boundary condition expresses the fact that F and $\vec{V}$ are tangential at any point; i.e.

$$u \frac{\partial F}{\partial x} + v \frac{\partial F}{\partial y} + w \frac{\partial F}{\partial z} = 0$$

I-5.2.2 At movable solid boundaries (wheel of turbine, wave paddle, etc.) the boundary condition expresses the fact that the fluid follows the boundary: the velocity component of the fluid perpendicular to the boundary is equal to the corresponding component of the boundary itself

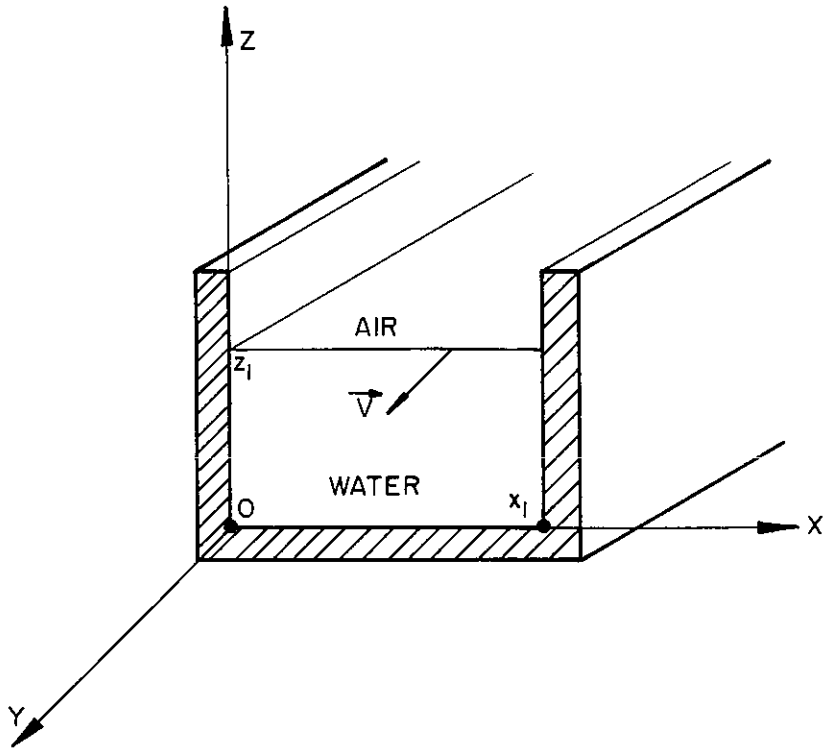

FIGURE I-9
UNIFORM FLOW IN A RECTANGULAR CHANNEL

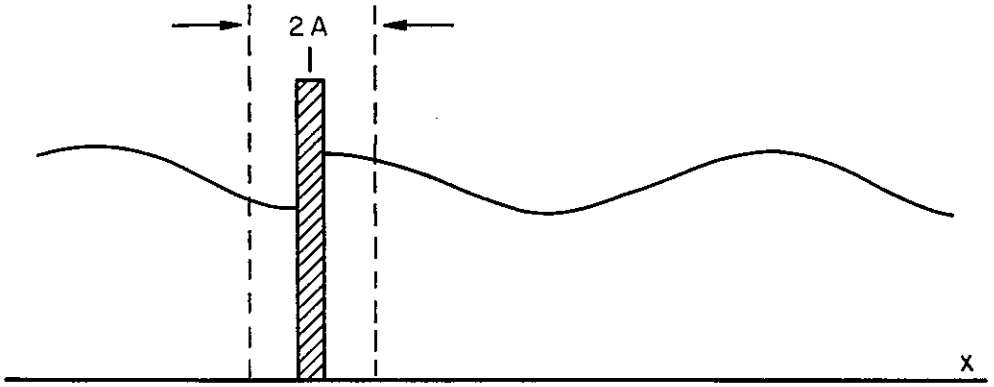

FIGURE I-10
A PISTON WAVE PADDLE GIVES A MOVABLE BOUNDARY CONDITION

(the other component being zero for a real fluid).

If $F(x, y, z, t) = \text{constant}$ is the equation of the movable boundary, the boundary condition expresses the fact that the fluid remains at the boundary, i.e.,

$$\frac{\partial F}{\partial t} + u \frac{\partial F}{\partial x} + v \frac{\partial F}{\partial y} + w \frac{\partial F}{\partial z} = 0$$

I-5.3 INFINITY INTRODUCING A BOUNDARY CONDITION

An infinite distance can give a boundary condition if the motion tends to a well-known value far from the studied space. For example, consider the diagram shown in Figure I-11. The motion is well known at infinity and can be written (as far as friction effect is negligible) $V = \text{constant}$ for x tends to $\pm \infty$.

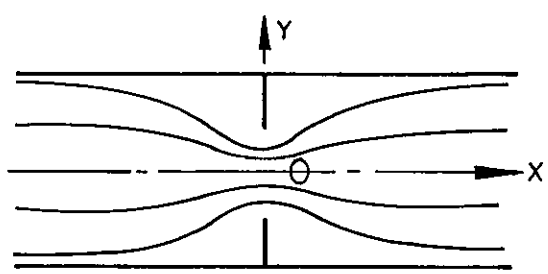

FIGURE I-11
FLOW IN A PIPE PAST A DIAPHRAGM
$V = V_o$ when $x \rightarrow \pm \infty$

It is well known that the motion of swell in deep water is limited to a zone near the free surface. Hence the periodic gravity wave theory in infinite depth is based on the boundary condition $\vec{V} \rightarrow 0$ when the distance from the free surface tends to infinity: $z \rightarrow -\infty$. (Figure I-12)

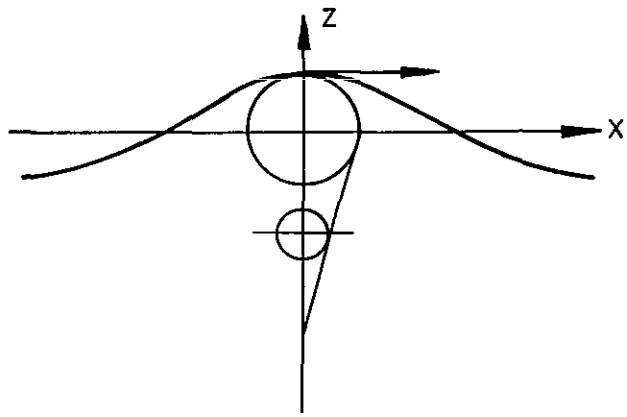

FIGURE I-12
PERIODICAL GRAVITY WAVE IN INFINITE DEPTH
$V \rightarrow 0$ when $z \rightarrow -\infty$

I-1 Consider a two-dimensional flow motion defined by the velocity components:

$$u = A + Bt$$

$$v = C$$

where A, B, and C are constant parameters. Demonstrate that the streamlines are straight lines and that the particle paths are parabolas.

Answer:

Streamlines:

$$y - y_o = \frac{C}{A + Bt_o}(x - x_o)$$

Paths:

$$x - x_o = \frac{A}{C}(y - y_o) + \frac{1}{2}\frac{B}{C}(y - y_o)^2$$

I-2 A disk of radius R rolls on a horizontal plane at a constant angular velocity k. Demonstrate that the "streamlines" are circular and that the paths are trochoidal.

Answer:

At a point (r, θ) within the circle

$$u = k\,[R + r \sin(kt + \theta)]$$

$$w = kr \cos(kt + \theta)$$

Streamlines, circles of radius R_s

$$R_s = [R^2 + r^2 + 2\,rR\cos\theta]^{1/2}$$

centered at the point where the circle touches the plane ($t_o = 0$)

Paths, taking $\theta = 0$, $k(t - t_o) = \Phi$

$$\begin{cases} x - x_o = R + r\sin\Phi \\ z - z_o = R + r\cos\Phi \end{cases}$$

which are the parametric equations of a trochoid.

I-3 Consider a fixed cylinder in a uniform current of constant velocity. It will be assumed that there is no separation. Sketch the streamlines, the paths, and the streaklines intuitively. Consider now a cylinder moving at constant velocity in still water, and sketch the streamlines, the paths, and the streaklines. Explain the differences between the two cases, considered as a steady and an unsteady motion respectively.

I-4 A flow motion is defined in an Eulerian system of coordinates by the equations:

$$u = A \qquad\qquad v = B$$

What is the expression of the same motion in a Lagrangian system?

I-5 A two-dimensional flow motion (linear periodic gravity waves) is defined in a Lagrangian system of coordinates by the equations:

$$x = x_o + \frac{H}{2} \frac{\cosh m (d + z_o)}{\sinh m d} \sin (kt - m x_o)$$

$$z = z_o + \frac{H}{2} \frac{\sinh m (d + z_o)}{\sinh m d} \cos (kt - m x_o)$$

where H is the wave height; m, k, and d are constants ($m = \frac{2\pi}{L}$, L is the wave length, $k = \frac{2\pi}{T}$, T is the wave period, and d is the water depth.

Answer:

Paths: Calculate $(x - x_o)^2$, $(z - z_o)^2$ and add. Solution:

$$\left(\frac{x - x_o}{A}\right)^2 + \left(\frac{z - z_o}{B}\right)^2 = 1 \quad \text{(ellipse)}$$

where

$$A = \frac{H}{2} \frac{\cosh m (d + z_o)}{\sinh m d}$$

$$B = \frac{H}{2} \frac{\sinh m (d + z_o)}{\sinh m d}$$

Streamlines:

$$\frac{K}{\cos m x} = \sinh m (d + z)$$

I-6 Express mathematically the boundary conditions for any kind of flow motion taking place between the boundaries defined by the following figure. A hinged paddle will be assumed to have a small sinusoidal motion of amplitude e at the free surface.

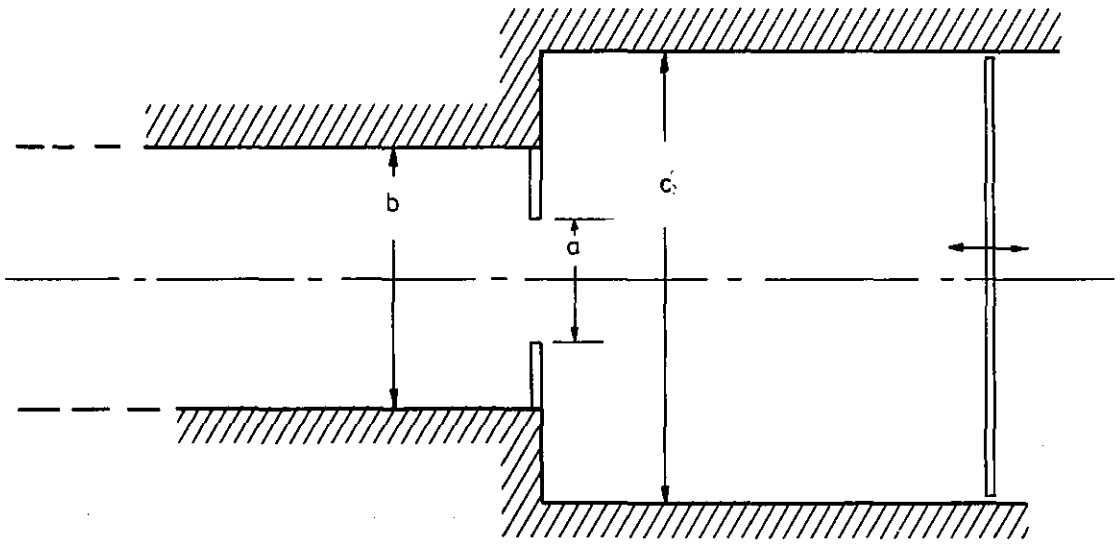

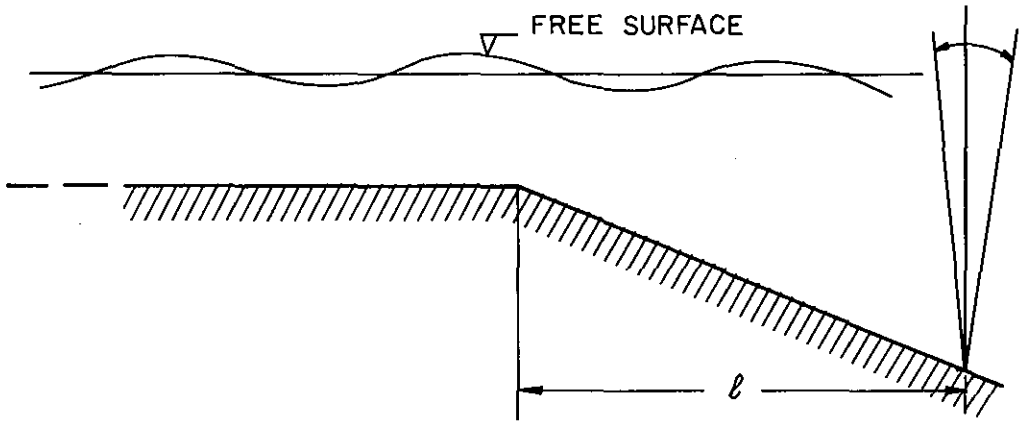

I-7 Consider a two-dimensional body moving at velocity U in the negative X-direction. The nose of this body can be defined by a curve such that $y = x^{1/3}$, and u and v are the components of velocity along the body. Establish the relationship between u, v, U and y.

Then consider the case where the body is fixed and the fluid is moving at a velocity U.

Answer:

Moving body in still fluid:

$$F = y^3 - (x + Ut) = 0$$

Boundary condition:

$$U - u + 3\,v\,y^2 = 0$$

Fixed body, fluid moving at velocity U at infinity:

$$y - x^{1/3} = 0$$

$$\frac{u}{v} = 3\,x^{2/3}$$

I-8 Consider a translatory wave in a channel moving without deformation at a constant velocity V in the negative X-direction. At a given time t the wave profile is defined approximately by the relationship $z = A\,x^{1/2}$ where A is a constant. Demonstrate that the free surface velocity components u_s and w_s are related by the equation

$$w_s = (u_s - V)\,\frac{A^2}{2\,z}$$

Answer:

$$F = z^2 - A^2 (x - Vt) = 0$$

$$w = \frac{A^2}{2z} (V - u)$$

I-9 A sphere of radius R is moving at a velocity $U(u_s, v_s, w_s)$ through a fluid at rest. Establish the equation for the boundary condition.

Answer:

$$F = (x - u_s t)^2 + (y - v_s t)^2 + (z - w_s t)^2 - R^2 = 0$$

$$(u - u_s)(x - U_s t) + (v - v_s)(y - v_s t)(w - w_s)(z - w_s t) = 0$$

CHAPTER II

MOTIONS OF FLUID ELEMENT

DEFINITION OF AN IRROTATIONAL MOTION

II-1 INTRODUCTION TO THE DIFFERENT KINDS OF MOTION

The motion of the fluid elements along their own paths is mathematically considered as the superimposition of different kinds of primary motions. The physical interpretation of these motions is given first by considering the simple case of a two-dimensional fluid element, where all velocities are parallel to the OX axis (like a laminar flow between two parallel planes).

Consider the square element ABCD at time t and the same element at time t + dt: $A_1B_1C_1D_1$. (Figure II-1).

The velocity of A and D is u, and the velocity of B and C is $u + du = u + \frac{\partial u}{\partial y} dy$ since AB = dy, and u in this case is a function of y only.

To go from ABCD to $A_1B_1C_1D_1$, it is possible to consider successively:

(a) a translatory motion which gives $A_1B_2C_2D_1$. The speed of translation is u.

(b) a rotational motion which turns the diagonals A_1C_2 and D_1B_2 to A_1C_3 and D_1B_3, respectively.

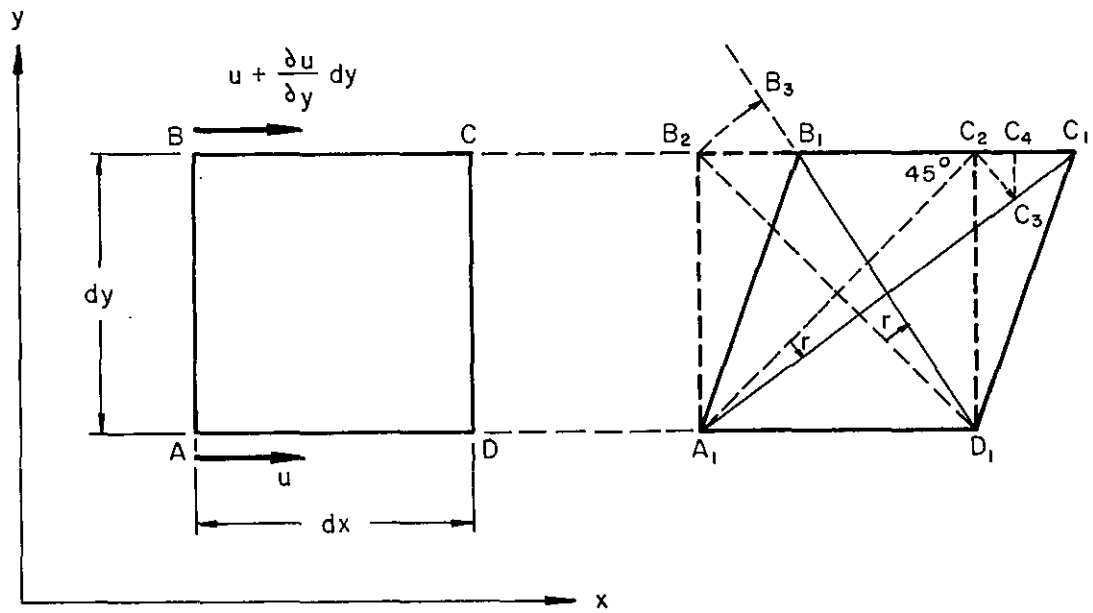

FIGURE II-1
ELEMENTARY ANALYSIS OF DIFFERENT KINDS OF MOTION OF A FLUID PARTICLE

(c) a deformation which displaces C_3 to C_1 and B_3 to B_1.

If in the limit dt tends to zero, C_1C_2 tends to zero; then the angle $C_2C_1C_3$ tends to 45°. Hence:

$$C_2C_3 = \frac{C_1C_2}{\sqrt{2}} = \frac{\frac{\partial u}{\partial y}\, dy\, dt}{\sqrt{2}}$$

The rate of angular rotation is:

$$\frac{dr}{dt} = \frac{d}{dt}\left\{\frac{\text{segment}}{\text{radius}}\right\} \approx \frac{d}{dt}\,\frac{C_2C_3}{A_1C_2} = \frac{d}{dt}\,\frac{C_2C_3}{\sqrt{2}\ dy}$$

Introducing the value C_2C_3 previously given, it is found that the rate of angular rotation is:

$$\frac{dr}{dt} = \frac{1}{2}\,\frac{\partial u}{\partial y}$$

Similarly, the rate of deformation would be found to be equal to:

$$\frac{\partial}{\partial t}\left(\frac{C_3C_1}{A_1C_3}\right) = \frac{1}{2}\,\frac{\partial u}{\partial y}$$

II-2 TRANSLATORY MOTION

Consider the particle A at the point A(x, y, z) at time t, the edges of which are parallel to the three axes OX, OY, OZ respectively (Figure II-2). When the particle moves so that the edges remain parallel to these axes, and maintain a constant length, it is a translatory motion only. This translation can be along a straight line or a curved line.

If x, y, and z are the coordinates of A at time t, $x + \Delta x$, $y + \Delta y$, $z + \Delta z$, at time $t + \Delta t$, the translatory motion is defined by the equations:

$$\Delta x = u \ \Delta t \qquad\qquad dx = u \ dt$$

$$\Delta y = v \ \Delta t \qquad \text{or} \qquad dy = v \ dt$$

$$\Delta z = w \ \Delta t \qquad\qquad dz = w \ dt$$

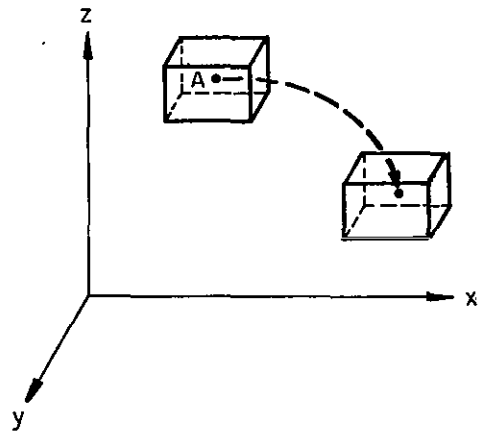

FIGURE II-2
TRANSLATORY MOTION

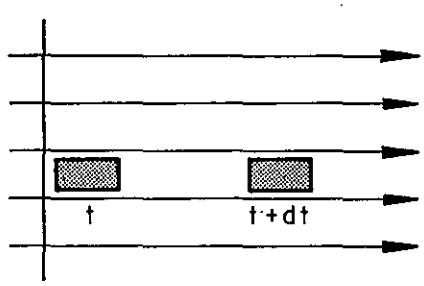

FIGURE II-3
AN EXAMPLE OF TRANSLATORY
MOTION: UNIFORM FLOW

The flow of particles along parallel and straight streamlines with a constant velocity (so called uniform flow) is a case of translatory motion only. (Figure II-3). This kind of motion alone

is more theoretical than encountered in practice.

The translatory motion may be defined more rigorously as the motion of the center of the particle instead of the motion of the corner of the particle. However, this change complicates slightly the development of figures and equations and gives, finally, the same result. Hence in the following discussion, translatory motion will be defined as the motion of a corner.

In the following, the physical meanings and the corresponding mathematical expressions are studied in the case of a two-dimensional motion at first, then they are generalized for a three-dimensional motion.

II-3 DEFORMATION

It is easier to explain this kind of motion with the aid of an example. Two kinds of deformation have to be distinguished: dilatational deformation and angular deformation.

II-3.1 DILATATIONAL OR LINEAR DEFORMATION

In a converging flow, the velocity has a tendency to increase along the paths of particles. Therefore, the velocities of the edges perpendicular to vector $\vec{V}$ (or to the streamlines) are not the same. (Figure II-4) The particle becomes longer and thinner. Assuming that the angles between the edges do not change, this is a case of dilatational or linear deformation superimposed on a translation.

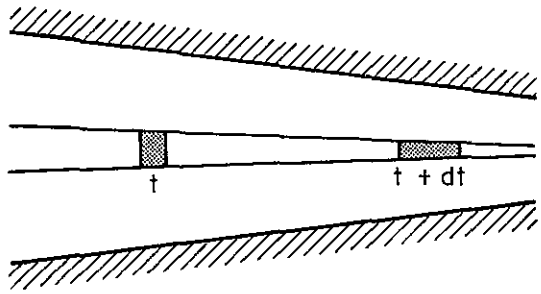

FIGURE II-4
DILATATIONAL DEFORMATION OF FLUID PARTICLE IN A CONVERGENT

Now consider the two-dimensional particle ABCD of which the velocity of the edge AB is u, and the velocity of the edge CD is $u + du = u + \frac{\partial u}{\partial x} dx$, since AD = dx (Figure II-5). Similarly the velocity of AD is v, and the velocity of BC is: $v + \frac{\partial v}{\partial y} dy$

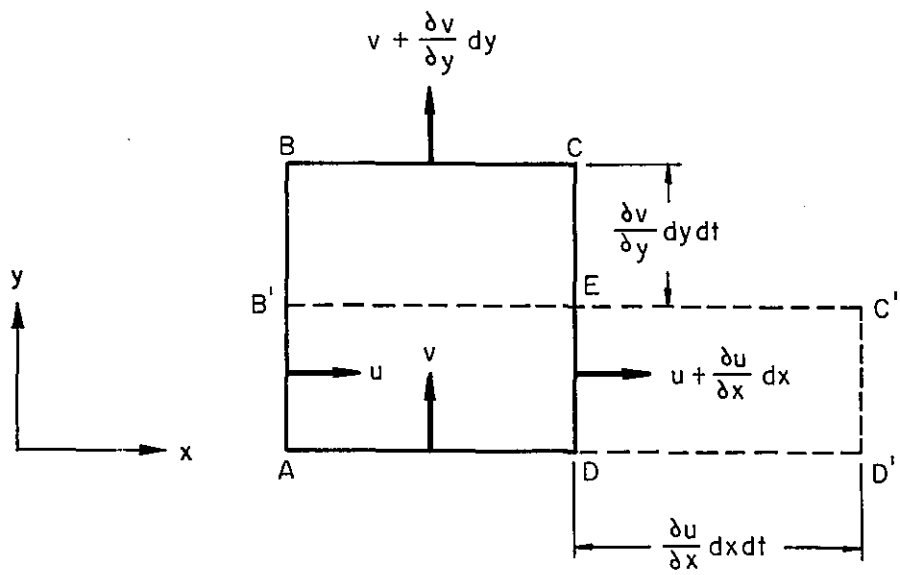

FIGURE II-5
COMPONENTS OF DILATATIONAL DEFORMATION

The velocities of dilatational deformations are $\frac{\partial u}{\partial x} dx$ and $\frac{\partial v}{\partial y} dy$. After a time dt, BC becomes B'C', the length BB' being equal to the product of the change of velocity and the time, that is:

$BB' = \frac{\partial v}{\partial y} dy\ dt$. (The velocity $\frac{\partial v}{\partial y} dy$ is negative in the case of Figure II-5.) CD becomes C'D' and similarly DD' is equal to: $DD' = \frac{\partial u}{\partial x} dx\ dt$.

The velocities of dilatational deformation being $\frac{\partial u}{\partial x} dx$ and $\frac{\partial v}{\partial y} dy$, they are by unit of length:

$$\frac{\frac{\partial u}{\partial x} dx}{dx} = \frac{\partial u}{\partial x} \qquad \frac{\frac{\partial v}{\partial y} dy}{dy} = \frac{\partial v}{\partial y}$$

The sum $\left(\frac{\partial u}{\partial x} + \frac{\partial v}{\partial y}\right)$ is the total rate of dilatational deformation, i.e., the rate of change of volume by unit volume. Areas BCEB' and D'C'ED must be equal in the case of an incompressible fluid. Their difference gives the rate of expansion or compression in the case of a compressible fluid.

II-3.2 ANGULAR DEFORMATION OR SHEAR STRAIN

Angular deformation may be illustrated by the behavior of a fluid particle flowing without friction around a bend. It is a matter of common observation that it is windier at a corner than it is in the middle of a street. In the similar case of fluid flow around a bend, provided we can neglect the effects of friction, the velocity has a tendency to be greater on the inside than it is on the outside of the bend, and the law $V \times R$ = CONSTANT may be approximately applied, where V is the velocity and R is the radius of curvature of the paths. Hence the

edge AB of the particle A moves at a greater velocity than the edge CD and the particle is deformed angularly. (Figure II-6). This angular deformation is proportional to the difference of velocity between AB and CD.

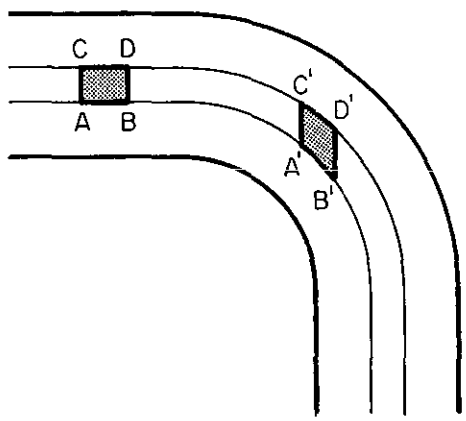

FIGURE II-6
SHEAR DEFORMATION IN A BEND

Now, considering for example the case presented in Figure II-7, in which the velocity of AB is u, and the velocity of CD is $u + du = u + \frac{\partial u}{\partial y} dy$, then the distance CC' (or DD') after a time dt is $\frac{\partial u}{\partial y} dy\ dt$, and the angular velocity is:

$$\frac{\frac{\partial u}{\partial y} dy}{dy} = \frac{\partial u}{\partial y}$$

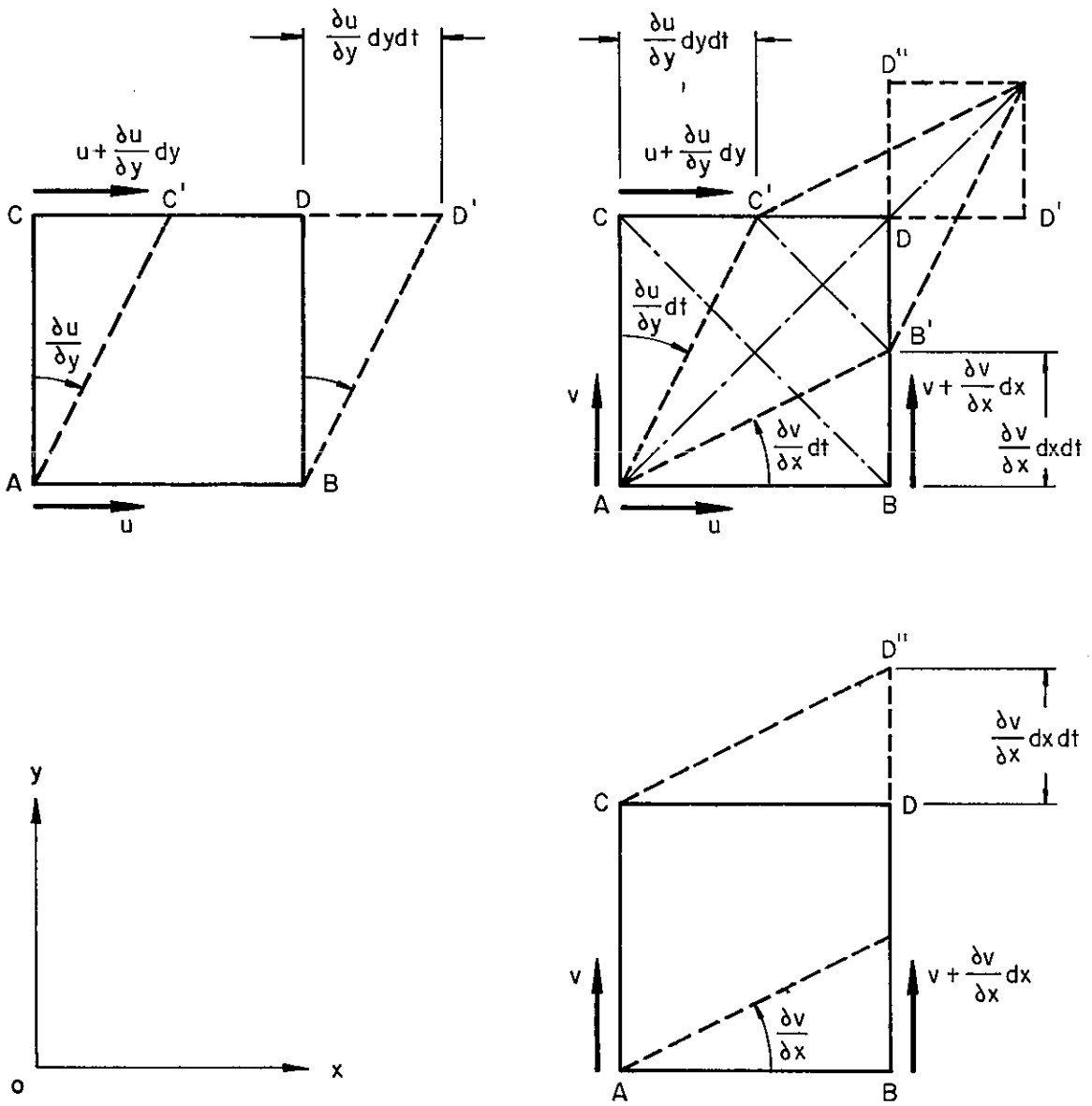

FIGURE II-7
ANGULAR OR SHEAR DEFORMATION

Similarly BB' (or DD'') is equal to $\frac{\partial v}{\partial x}$ dx dt. When these two deformations exist at the same time, the sum of the angular velocities $\left(\frac{\partial u}{\partial y} + \frac{\partial v}{\partial x}\right)$ is the rate of angular deformation.

It is to be noticed in Figure II-7 that $\frac{\partial u}{\partial y} = \frac{\partial v}{\partial x}$ and the bisectors of the angles made by the edges of the fluid particle tend to remain parallel to their initial positions during the angular deformation. This leads to the very important concept of rotational motion, where the bisectors do not remain parallel to their initial positions.

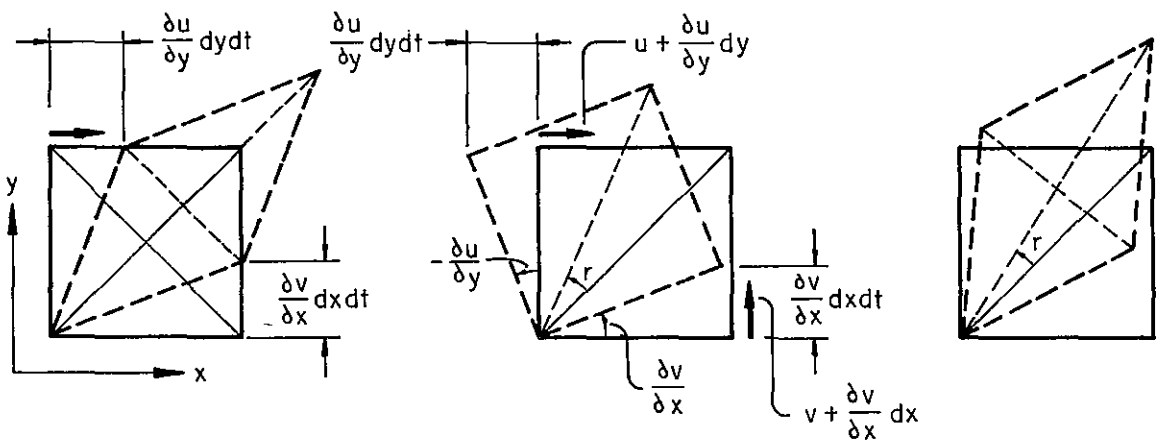

Shear Deformation Without Rotation	Rotation Without Deformation	Rotation and Deformation
$\frac{\partial u}{\partial y} - \frac{\partial v}{\partial x} = 0$	$\frac{\partial u}{\partial y} - \frac{\partial v}{\partial x} \neq 0$	$\frac{\partial u}{\partial y} - \frac{\partial v}{\partial x} \neq 0$
$\frac{\partial u}{\partial y} + \frac{\partial v}{\partial x} \neq 0$	$\frac{\partial u}{\partial y} + \frac{\partial v}{\partial x} = 0$	$\frac{\partial u}{\partial y} + \frac{\partial v}{\partial x} \neq 0$

FIGURE II-8
ROTATION AND DEFORMATION

II-4 ROTATION

It is known from elementary hydraulics that flow motions are classified according to some of their typical characteristics. For example, a flow may be laminar or turbulent, with or without friction, steady or unsteady and so on. Now, one of the most important divisions in hydrodynamics consists of considering whether a flow is rotational or irrotational.

Hence, the abstract concept of irrotationality is fully developed in the following paragraphs.

II-4.1 MATHEMATICAL DEFINITIONS

It has been shown that the angular velocities of deformation are $\frac{\partial u}{\partial y}$ and $\frac{\partial v}{\partial x}$. The rotation of a particle is proportional to the difference between these components. Indeed if $\frac{\partial u}{\partial y} dt = \frac{\partial v}{\partial x} dt$, there is angular deformation without rotation: the bisectors do not rotate. But if $\frac{\partial u}{\partial y} dt \neq \frac{\partial v}{dx} dt$, the bisectors change their direction, and there is either both rotation and angular deformation, or rotation only (Figure II-8).

The difference $\left(\frac{\partial u}{\partial y} - \frac{\partial v}{\partial x}\right)$ defines the rate of rotation. A two-dimensional irrotational motion is defined mathematically by

$$\frac{\partial u}{\partial y} - \frac{\partial v}{\partial x} = 0.$$

In hydrodynamics, angular deformation can be considered without rotation when $\frac{\partial u}{\partial y} - \frac{\partial v}{\partial x} = 0$ and $\frac{\partial u}{\partial y} + \frac{\partial v}{\partial x} \neq 0$, and, theoretically, rotation can exist without deformation when $\frac{\partial u}{\partial y} - \frac{\partial v}{\partial x} \neq 0$ and $\frac{\partial u}{\partial y} + \frac{\partial v}{\partial x} = 0$. But in practice, this case is rare and physically, rotation generally involves angular deformation. However, a forced vortex schematically shown on Figure II-9, is a case where

particles rotate without deformation, but this case can be considered more as a special case of hydrostatics where the centrifugal force is added to gravity rather than a real rotational flow.

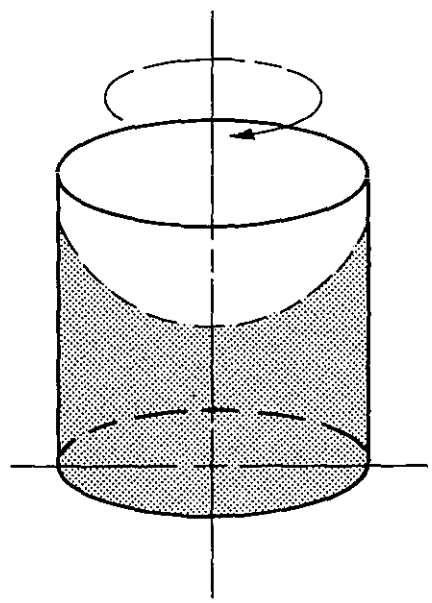

FIGURE II-9
FORCED VORTEX

II-4.2 VELOCITY POTENTIAL FUNCTION - DEFINITION

This concept of irrotational motion is very important in hydrodynamics since it can be used to provide many relatively simple and powerful analytical, graphical or analog methods which can be used in the solution of hydraulic problems. The best known example is the two-dimensional steady flow net method. Some others are method of

relaxation, conformal mapping, potential function calculation, analog methods, etc.

Associated with this concept of irrotationality, there exists an efficient mathematical tool: the so-called velocity potential function ϕ which for the X and Y directions can be defined as $u = \frac{\partial \phi}{\partial x}$ and $v = \frac{\partial \phi}{\partial y}$. It can also be defined as $u = -\frac{\partial \phi}{\partial x}$, $v = -\frac{\partial \phi}{\partial y}$ arbitrarily. Substituting these values in the above condition for irrotational flow $\frac{\partial u}{\partial y} - \frac{\partial v}{\partial x} = 0$ yields $\frac{\partial^2 \phi}{\partial y \, \partial x} - \frac{\partial^2 \phi}{\partial x \, \partial y} = 0$. It is assumed that the differentials of ϕ are continuous.

Since the differentiation with respect to two variables is independent of the order of differentiating, the above equation is seen to be an identity, which substantiates the definition of ϕ given above.

The value of the velocity $\vec{V}$ in terms of velocity potential function ϕ is $\vec{V} = \frac{\partial \vec{\phi}}{\partial x} + \frac{\partial \vec{\phi}}{\partial y}$, and in rectangular coordinates

$$V^2 = \left(\frac{\partial \phi}{\partial x}\right)^2 + \left(\frac{\partial \phi}{\partial y}\right)^2 .$$

II-4.3 THEORETICAL REMARK ON IRROTATIONAL FLOW

It is useful to study the characteristics of an irrotational flow. For this purpose, the previous example of a flow without friction in a bend, or of a free vortex motion defined by the law VXR = K, will be analyzed. (See Figure II-10).

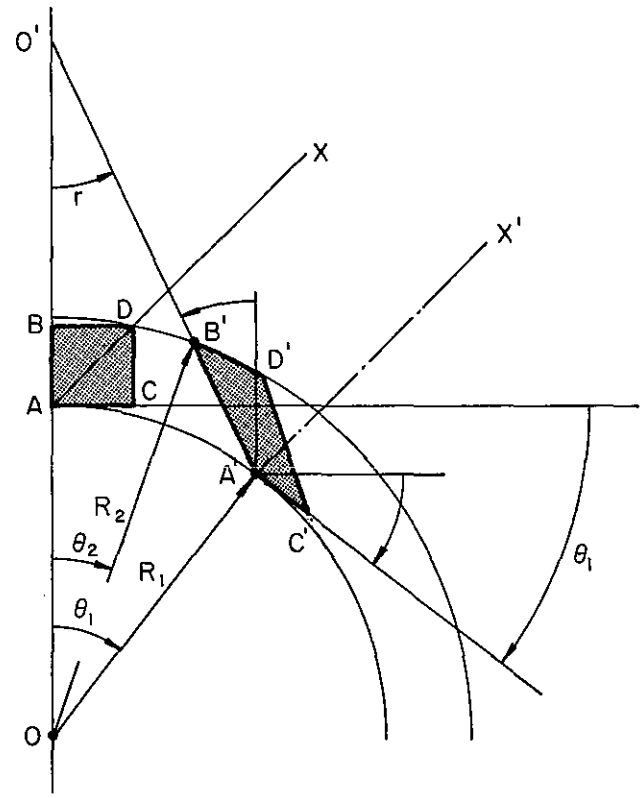

FIGURE II-10
IN THE CASE OF AN INFINITELY SMALL DISPLACEMENT IN AN IRROTATIONAL FLOW, THE BISECTORS OF A FLUID PARTICLE TEND TO REMAIN PARALLEL

Consider an elementary fluid particle ABCD between two path lines defined by their radius of curvature R_1 and R_2 such that $R_2 = R_1 + dR$, dR being infinitely small.

After an interval of time dt, ABCD becomes A'B'C'D', and

$$AA' = CC' = V_1 dt = K \frac{dt}{R_1}$$

$$BB' = DD' = V_2 dt = K \frac{dt}{R_2}$$

The side AB rotates to A'B' by an infinitely small range r such that

$$-r \simeq -\tan r \simeq -\frac{BB'}{O'B} \simeq -\frac{K\,dt}{R_2 O'B}$$

or one has also

$$r \simeq \tan r \simeq -\frac{AA'}{O'A} \simeq -\frac{K\,dt}{R_1\ O'A}$$

Equating these last expressions leads to:

$$\frac{O'B + dR}{O'B} = \frac{R' + dR}{R_1}$$

or $O'B = R_1$ and $O'A = R_2$. Substituting these values yields $-r = \frac{K\,dt}{R_1\ R_2}$. Or dR being small, $-r = \frac{K\,dt}{R_1{}^2}$.

On the other hand since $\theta_1 = \frac{AA'}{R_1} = \frac{K\,dt}{R_1{}^2}$, hence $-r = \theta_1$.

The side AC rotates into A'C' through the angle θ_1. Since the two sides AB and AC rotate by the same quantity θ_1, but in opposite directions, the bisector AX remains parallel to the bisector A'X'. The orientation of this median line remains unchanged, which is the condition for the motion to be irrotational.

It must be emphasized that the previous demonstration holds true when an infinitely small displacement is considered. It does not hold true for a finite displacement, as is illustrated by Figure II-11. It can be seen that the two bisectors have a tendency to rotate in the same direction.

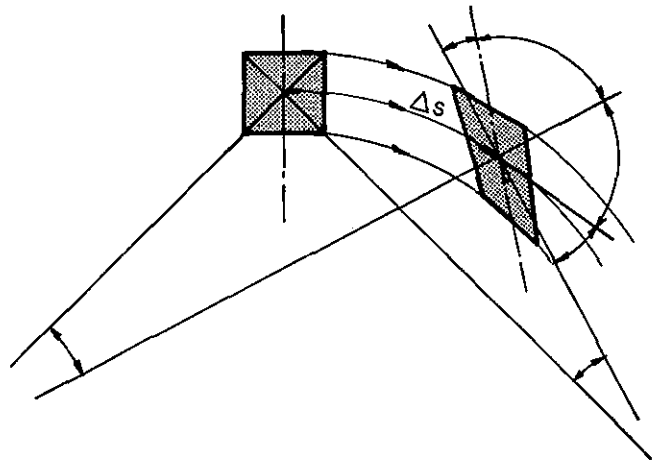

FIGURE II-11
FOR A FINITE DISPLACEMENT, BISECTORS ROTATE IN AN IRROTATIONAL FLOW

Both the angle of rotation of the bisectors and the angle of angular deformation have a finite value for a finite displacement of the particle. They both tend to be infinitesimal when the displacement tends to zero. However, in the latter case, the angle of rotation is an infinitesimal of higher order than the angle of deformation. Irrotationality has to be considered locally and not along a path.

$$\underset{r \text{ or } \theta}{\underline{\text{The angle between } AX \text{ and } A'X'}} \longrightarrow 0 \quad \text{when} \quad dS \longrightarrow 0$$

However, the bisectors remain parallel in the case of uniform flow and in the case of linear deformation, where neither angular deformation nor rotation occurs, as is shown by Figure II-4.

II-4.4 PRACTICAL LIMIT OF VALIDITY OF IRROTATIONALITY

II-4.4.1 Rotation Caused by Friction Forces: the Kelvin Theorem

II-4.4.1.1

In practice it is very important to know when the motion of the fluid particles can be considered as an irrotational motion. Only if the assumption of irrotationality is valid can the methods of calculation of a velocity potential function, conformal mapping, relaxation methods, flow nets, electrical analogy, etc., be applied successfully.

The concept of irrotationality is essentially mathematical and is $\frac{\partial u}{\partial y} - \frac{\partial v}{\partial x} = 0$ in the case of two-dimensional motion. The difficulty arises when one tries to establish some simple rules for assessing the validity of this assumption because such simple rules do not exist.

Rotation may be caused by viscous forces, but a rotational solution also exists for a perfect fluid, and irrotational flows exist in a viscous fluid.

For example, let us consider a reservoir, where the flow velocity is practically zero, and a connected duct. Initially the fluid is irrotational, but the flow becomes rotational at the entrance of the duct under the influence of the viscous stresses: so friction forces cause rotation. It is the Kelvin Theorem which applies in the case where μ is different from zero, for fluid of constant density, under a constant gravity force.

II-4.4.1.2

An exact demonstration of the theorem is beyond the scope of this book as a physical introduction to rotation will suffice in the following. Now, it is easy to see whether a motion is physically rotational

or irrotational by a consideration of friction effects. Figures II-12 and II-13 are self-explanatory and illustrate some cases where it is possible to see easily whether the assumption of irrotational motion is permissible.

Motion will be assumed to be irrotational when the velocity gradient is small (periodic gravity wave) or when streamlines converge rapidly and when the velocity distribution depends on the shape of the boundaries and not on their roughness.

Motion is rotational when the boundary layer affects the velocity distribution or in a diverging flow.

The definition of the boundary layer itself can be based on the concept of irrotationality. The boundary layer is the domain where the flow is always rotational while it is often irrotational outside the boundary layer. A motion may be considered irrotational only if the boundary layer is of little importance, i.e., relatively thin. Figure II-14 illustrates the case of a weir where the boundary layer thickness increases downstream. The motion is irrotational only near the top. The same motion may be considered as rotational or irrotational according to the phenomena to be studied. For example, the flow passing through an orifice is considered as an irrotational flow if it is desired to determine the distribution of pressure against the wall (Figure II-15). However, for analyzing the coefficient of discharge of this orifice, since this coefficient is a function of the thickness of the boundary layer near the orifice, the motion may no longer be considered as irrotational. In elementary hydraulics the value of this coefficient is given as a function of the Reynolds number because of the relationship between the thickness of the boundary layer and the Reynolds number.

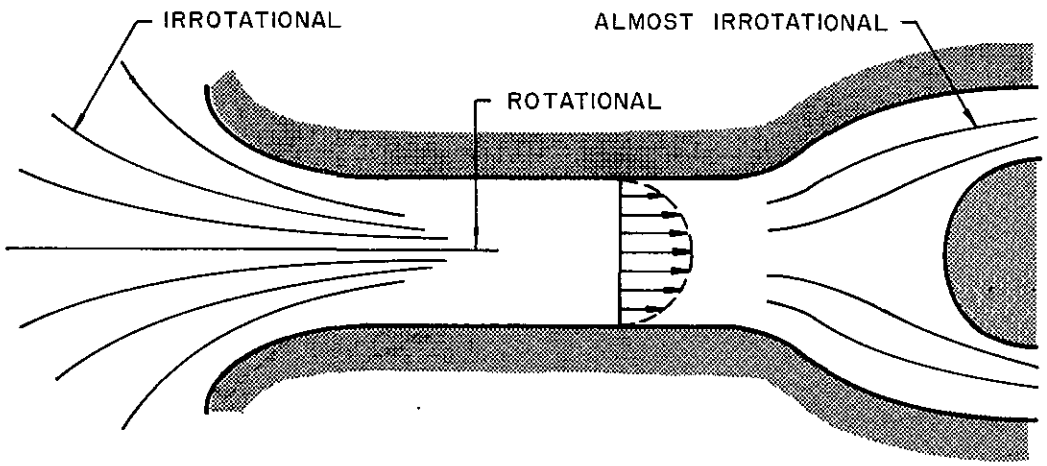

FIGURE II-12
EXAMPLES OF ROTATIONAL AND IRROTATIONAL MOTION

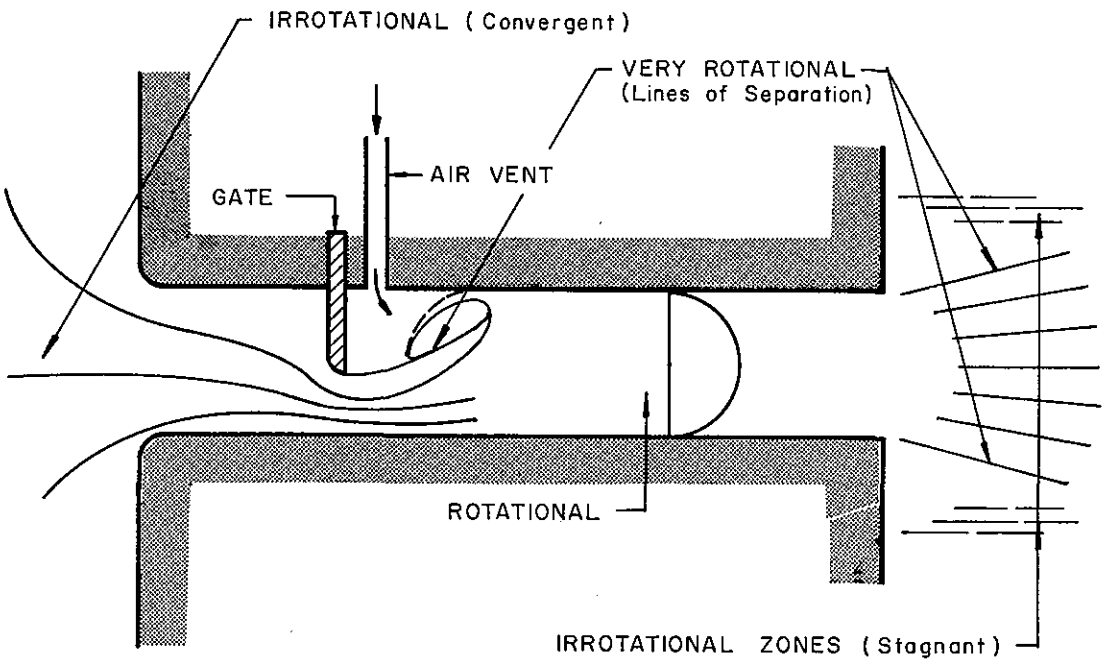

FIGURE II-13
EXAMPLES OF ROTATIONAL AND IRROTATIONAL MOTION

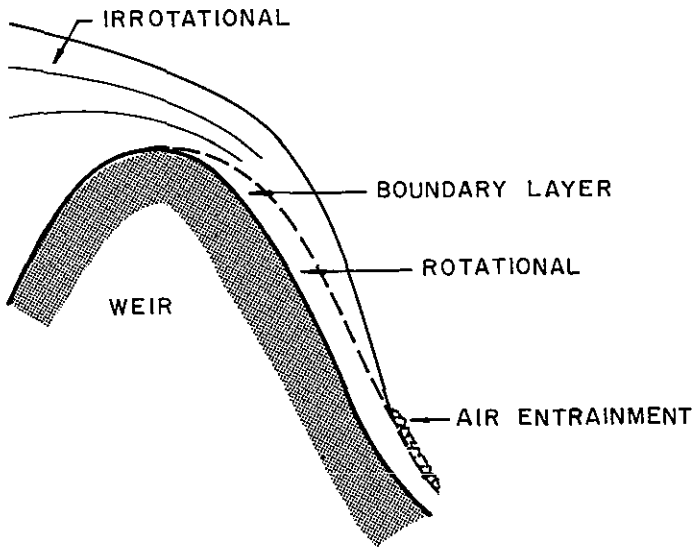

FIGURE II-14
EFFECT OF THE BOUNDARY LAYER

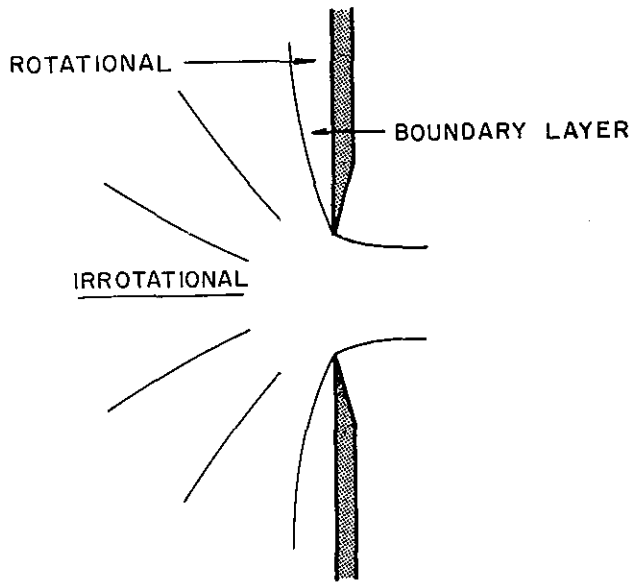

FIGURE II-15
COEFFICIENT OF DISCHARGE DEPENDS ON
THE THICKNESS OF THE BOUNDARY LAYER

II-4-4.2 Rotational Solutions in a Perfect Fluid

It is seen that the rotation may physically be due to the friction. The physical considerations on friction effects have permitted defining practical rules to follow.

However, there exist mathematical solutions of rotational motion where the friction forces are neglected. The classical Bernoulli equation of elementary hydraulics is valid only along a streamline when motion is rotational without friction (see Chapter X). Another example is Gerstner's theory on periodic gravity waves. In this theory, the fluid particles describe circles, and also rotate about themselves in the opposite direction (Figure II-16); it is expressed by an exact mathematical solution of the basic equations in which the friction terms have been neglected, but in which the inertial rotational terms are taken into account exactly.

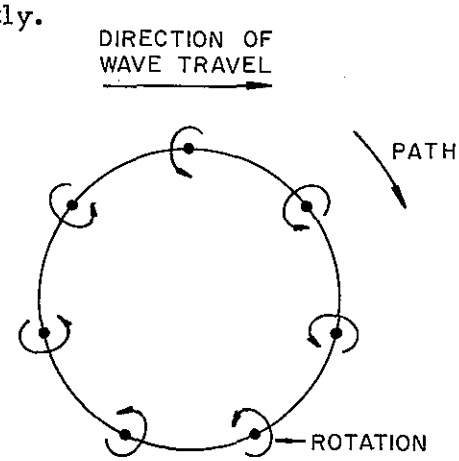

FIGURE II-16
PATH AND ROTATION OF A FLUID
PARTICLE IN A GERSTNER WAVE

On the other hand, some kinds of motion where friction has an important effect are studied as irrotational motion. For example, friction forces have a predominant effect on such phenomena as the damping of a gravity wave through a filter and flow through a porous medium (Figure II-17). However, in these cases, only the mean velocity with respect to space is considered. The actual system of complicated rotational motions through the porous medium is studied as an average motion with respect to space which is irrotational at low Reynolds number (see Chapter IX). Similarly, turbulent flow is strongly rotational but the mean motion with respect to time may often be considered as irrotational (see Chapter VII).

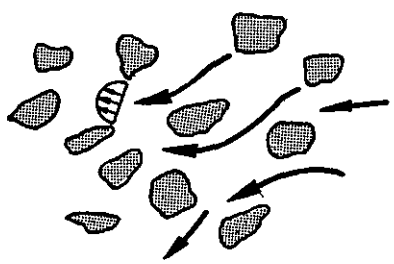

FIGURE II-17
FLOW THROUGH POROUS MEDIUM IS ROTATIONAL
BUT THE MEAN MOTION CAN BE IRROTATIONAL

II-4.4.3 The Case of Viscous Irrotational Flows

It may also occur that the flow is irrotational, whereas the coefficient of viscosity is not zero. This happens first when the sum of all the viscous terms which appear in the momentum equation equal zero, although each term individually is different from zero. Such kinds of motion are dissipative and irrotational.

A specific example of such a case is the motion generated by a circular cylinder rotating steadily about its axis in an unbounded viscous incompressible fluid. The velocity gradient normal to streamlines can be large near the cylinder. The motion is still irrotational (see Figure II-18).

The motion of a free vortex is also the same whether one considers the fluid perfect or viscous. The solution to the momentum equation for a perfect fluid (VR = constant) also makes the sum of all viscous terms of the momentum equation equal to zero.

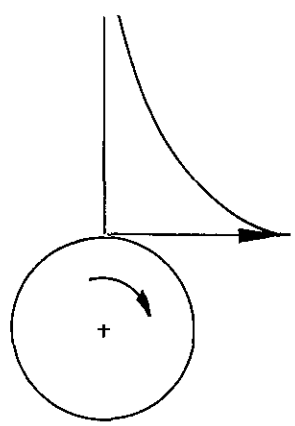

FIGURE II-18
VISCOUS IRROTATIONAL FLOW GENERATED IN AN UNBOUNDED FLUID BY A ROTATING CYLINDER

II-4.4.4 Energy Dissipation, Shear Deformation, and Rotationality

It has been seen that rotation may be caused by viscous forces. However, the fact that the motion is rotational does not necessarily mean that the motion is dissipative. A motion is dissipative when there are linear and/or angular deformations associated with a non-negligible viscous coefficient. So an irrotational free vortex can be dissipative, while a rotational forced vortex is not dissipative.

Indeed, it will be seen in Section V-5.4.2 that the stresses σ and τ are proportional to the coefficients of linear and angular deformations presented in this chapter in Section II-5.2. So the viscous stresses owe their values and even their existence to the deformation and not to the rotationality.

It can be concluded that in general friction may cause rotation, but the existence of rotation does not imply friction, while deformation associated with a non-negligible viscosity does.

II-5 MATHEMATICAL EXPRESSIONS DEFINING THE MOTION OF A FLUID PARTICLE

II-5.1 TWO-DIMENSIONAL MOTION

Consider a fluid particle ABCD at time t. (Figure II-19). The velocity components u and v are functions of x and y such that $du = \frac{\partial u}{\partial x} dx + \frac{\partial u}{\partial y} dy$ and $dv = \frac{\partial u}{\partial x} dx + \frac{\partial v}{\partial y} dy$. At time t, the coordinates of A are x, y and of D are x + dx, y + dy.

The coordinates of A and D at time t + dt become:

$$A' \quad \begin{cases} x + u \ dt \\ y + v \ dt \end{cases}$$

$$D' \quad \begin{cases} x + dx + (u + du) \ dt \\ y + dy + (v + dv) \ dt \end{cases}$$

or

$$D' \quad \begin{cases} x + dx + u \ dt + \left(\frac{\partial u}{\partial x} dx + \frac{\partial u}{\partial y} dy \right) dt \\ y + dy + v \ dt + \left(\frac{\partial v}{\partial x} dx + \frac{\partial v}{\partial y} dy \right) dt \end{cases}$$

Adding and subtracting $\frac{1}{2} \frac{\partial v}{\partial x} dx \, dt$ to the abscissa and $\frac{1}{2} \frac{\partial u}{\partial y} dx \, dt$ to the ordinate, leads to the following forms in which the physical meaning of the terms becomes apparent by reference to the previous paragraphs.

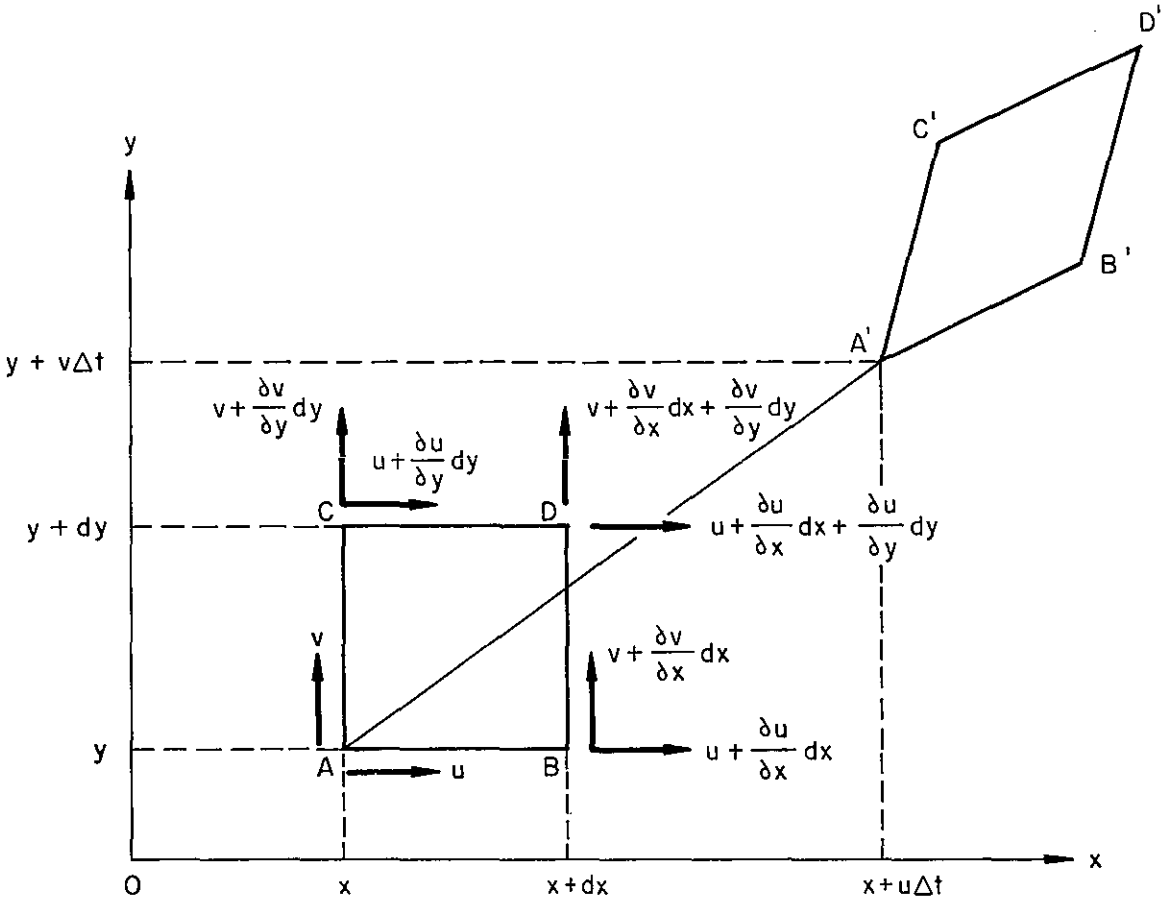

FIGURE II-19

VELOCITY COMPONENTS OF A FLUID PARTICLE

$$
D' \begin{cases} x + dx + u\,dt + \dfrac{\partial u}{\partial x}\,dx\,dt + \dfrac{1}{2}\left(\dfrac{\partial u}{\partial y} + \dfrac{\partial v}{\partial x}\right) dy\,dt - \dfrac{1}{2}\left(\dfrac{\partial v}{\partial x} - \dfrac{\partial u}{\partial y}\right) dy\,dt \\ y + dy + v\,dt + \dfrac{\partial v}{\partial y}\,dy\,dt + \dfrac{1}{2}\left(\dfrac{\partial u}{\partial y} + \dfrac{\partial v}{\partial x}\right) dx\,dt + \dfrac{1}{2}\left(\dfrac{\partial v}{\partial x} - \dfrac{\partial u}{\partial y}\right) dx\,dt \end{cases}
$$

Initial Coordinates; Translation; Dilatational or Linear Deformation; Rate of Angular Deformation; Angular or Shear Deformation; Rate of Rotation; Rotation

II-5.2 THREE-DIMENSIONAL MOTION - DEFINITION OF THE VORTICITY

Similar to the two-dimensional case, the coordinates of a point D' $(x + dx,\ y + dy,\ z + dz)$ of a three-dimensional elementary fluid particle after a time dt become:

$$
x + dx + u\,dt + \left(\frac{\partial u}{\partial x}\,dx + \frac{\partial u}{\partial y}\,dy + \frac{\partial u}{\partial z}\,dz\right) dt
$$

$$
y + dy + v\,dt + \left(\frac{\partial v}{\partial x}\,dx + \frac{\partial v}{\partial y}\,dy + \frac{\partial v}{\partial z}\,dz\right) dt
$$

$$
z + dz + w\,dt + \left(\frac{\partial w}{\partial x}\,dx + \frac{\partial w}{\partial y}\,dy + \frac{\partial w}{\partial z}\,dz\right) dt
$$

Adding and subtracting $\frac{1}{2}\frac{\partial v}{\partial x}\,dy\,dt$ and $\frac{1}{2}\frac{\partial w}{\partial x}\,dz\,dt$ to the first line;

$\frac{1}{2}\frac{\partial w}{\partial y}\,dz\,dt$ and $\frac{1}{2}\frac{\partial u}{\partial y}\,dx\,dt$ to the second line;

and $\frac{1}{2}\frac{\partial u}{\partial z}\,dx\,dt$ and $\frac{1}{2}\frac{\partial v}{\partial z}\,dy\,dt$ to the third line

leads to

$$x + dx + u\,dt + \frac{\partial u}{\partial x}\,dx\,dt + \left[\frac{1}{2}\left(\frac{\partial v}{\partial x} + \frac{\partial u}{\partial y}\right)dy + \frac{1}{2}\left(\frac{\partial u}{\partial z} + \frac{\partial w}{\partial x}\right)dz\right.$$

$$\left. + \frac{1}{2}\left(\frac{\partial u}{\partial z} - \frac{\partial w}{\partial x}\right)dz - \frac{1}{2}\left(\frac{\partial v}{\partial x} - \frac{\partial u}{\partial y}\right)dy\right]dt$$

$$y + dy + v\,dt + \frac{\partial v}{\partial y}\,dy\,dt + \left[\frac{1}{2}\left(\frac{\partial w}{\partial y} + \frac{\partial v}{\partial z}\right)dz + \frac{1}{2}\left(\frac{\partial v}{\partial x} + \frac{\partial u}{\partial y}\right)dx\right.$$

$$\left. + \frac{1}{2}\left(\frac{\partial v}{\partial x} - \frac{\partial u}{\partial y}\right)dx - \frac{1}{2}\left(\frac{\partial w}{\partial y} - \frac{\partial v}{\partial z}\right)dz\right]dt$$

$$z + dz + w\,dt + \frac{\partial w}{\partial z}\,dz\,dt + \left[\frac{1}{2}\left(\frac{\partial u}{\partial z} + \frac{\partial w}{\partial x}\right)dx + \frac{1}{2}\left(\frac{\partial w}{\partial y} + \frac{\partial v}{\partial z}\right)dy\right.$$

$$\left. + \frac{1}{2}\left(\frac{\partial w}{\partial y} - \frac{\partial v}{\partial z}\right)dy - \frac{1}{2}\left(\frac{\partial u}{\partial z} - \frac{\partial w}{\partial x}\right)dx\right]dt$$

And with the following notations:

Coefficients of dilatational deformation:

$$a = \frac{\partial u}{\partial x} \qquad b = \frac{\partial v}{\partial y} \qquad c = \frac{\partial w}{\partial z}$$

Coefficients of shear deformation:

$$f = \frac{1}{2}\left(\frac{\partial w}{\partial y} + \frac{\partial v}{\partial z}\right) \qquad g = \frac{1}{2}\left(\frac{\partial u}{\partial z} + \frac{\partial w}{\partial x}\right)$$

$$h = \frac{1}{2}\left(\frac{\partial v}{\partial x} + \frac{\partial u}{\partial y}\right)$$

Coefficients of rotation:

$$\xi = \frac{1}{2}\left(\frac{\partial w}{\partial y} - \frac{\partial v}{\partial z}\right) \qquad \eta = \frac{1}{2}\left(\frac{\partial u}{\partial z} - \frac{\partial w}{\partial x}\right)$$

$$\zeta = \frac{1}{2}\left(\frac{\partial v}{\partial x} - \frac{\partial u}{\partial y}\right)$$

$$x + dx + u\,dt + a\,dx\,dt + (h\,dy + g\,dz)\,dt + (\eta\,dz - \zeta\,dy)\,dt$$

$$y + dy + v\,dt + b\,dy\,dt + (f\,dz + h\,dx)\,dt + (\zeta\,dx - \xi\,dz)\,dt$$

$$\underbrace{z + dz}_{\text{Initial Co-ordinates}} + \underbrace{w\,dt}_{\text{Translatory Motion}} + \underbrace{c\,dz\,dt}_{\text{Dilatational Deformation}} + \underbrace{(g\,dx + f\,dy)}_{\text{Angular Deformation}}\,dt + \underbrace{(\xi\,dy - \eta\,dx)\,dt}_{\text{Rotation}}$$

2ξ, 2η, and 2ζ are the components of a vector which represents the vorticity of the fluid particle. A three-dimensional irrotational motion is defined by $\xi = 0$, $\eta = 0$, and $\zeta = 0$; that is:

$$\frac{\partial w}{\partial y} = \frac{\partial v}{\partial z}, \qquad \frac{\partial u}{\partial z} = \frac{\partial w}{\partial x}, \qquad \frac{\partial v}{\partial x} = \frac{\partial u}{\partial y}$$

II-5.3 VELOCITY POTENTIAL FUNCTION IN THE CASE OF A THREE-DIMENSIONAL MOTION

Associated with the mathematical representation of three-dimensional irrotational motion, the velocity potential function is defined by

$$u = \frac{\partial \phi}{\partial x}, \qquad v = \frac{\partial \phi}{\partial y}, \qquad \text{and} \qquad w = \frac{\partial \phi}{\partial z}$$

which may be written vectorially: $\vec{V} = \overrightarrow{\text{grad}}\ \phi$ or $\vec{V} = \nabla \phi$

Substituting these values in the above conditions yields:

$$\frac{\partial^2 \phi}{\partial x \; \partial y} = \frac{\partial^2 \phi}{\partial y \; \partial x}, \quad \frac{\partial^2 \phi}{\partial x \; \partial z} = \frac{\partial^2 \phi}{\partial z \; \partial x}, \text{ and } \frac{\partial^2 \phi}{\partial z \; \partial y} = \frac{\partial^2 \phi}{\partial y \; \partial z},$$

which substantiates the definition of ϕ since ϕ always satisfies the conditions for an irrotational flow. In other words, the existence of ϕ implies that the flow is irrotational.

Potential function is a matter for further study. (See Chapter XI).

II-5.4 STOKES ANALOGY - EXPERIMENT OF HELE-SHAW

A three-dimensional rotational motion may be a two-dimensional irrotational motion when the rotation is always in the same plane. For example, a thin layer of water flowing on a horizontal glass plate in which the thickness of the layer is very small in comparison with the other dimensions, has a rotational motion in a vertical plane only (Figure II-20). Seen in plan, the motion would appear as two-dimensional irrotational motion (see Problem VI-5).

In the case of Figure II-20, motion in the vertical plane XOZ is rotational, and $\frac{\partial u}{\partial x} - \frac{\partial w}{\partial x} \neq 0$, while the motion is irrotational in the planes XOY and YOZ: $\frac{\partial u}{\partial y} - \frac{\partial v}{\partial x} = 0$ and $\frac{\partial v}{\partial z} - \frac{\partial w}{\partial y} = 0$. It may be demonstrated that the average velocity with respect to a vertical verifies similar conditions of irrotationality.

The streamlines seen in plan are simply shown by the injection of dyes. The same result is obtained by a flow between two

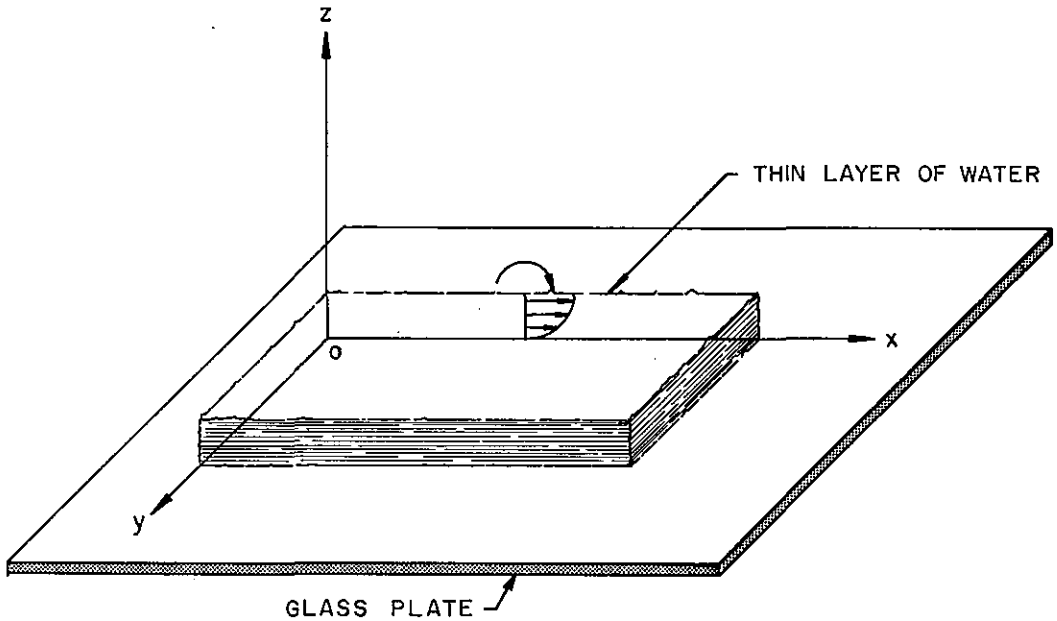

FIGURE II-20
IN A THIN FLOW OF WATER, ROTATION EXISTS
ONLY IN A VERTICLE PLANE

vertical parallel planes. This method is often used to determine the flow pattern of two-dimensional or almost two-dimensional motion. Some examples are: flow pattern around a wing, influence of an intake on the flow of a wide and shallow river. (Figure II-21).

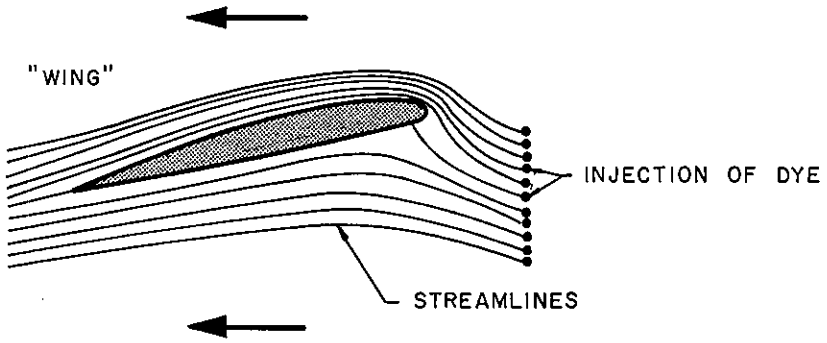

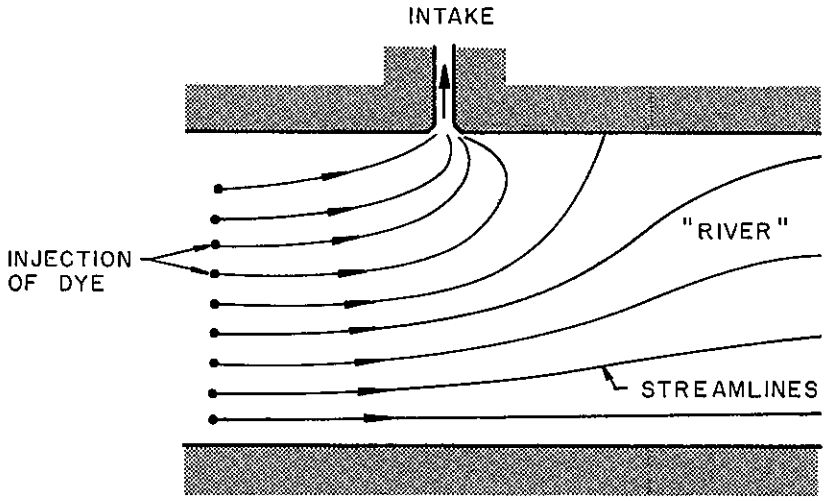

FIGURE II-21
EXAMPLES OF STUDIES BASED ON STOKES ANALOGY WITH VISCOUS FLOW

II-1 Consider a two-dimensional convergent as shown by the following figure.

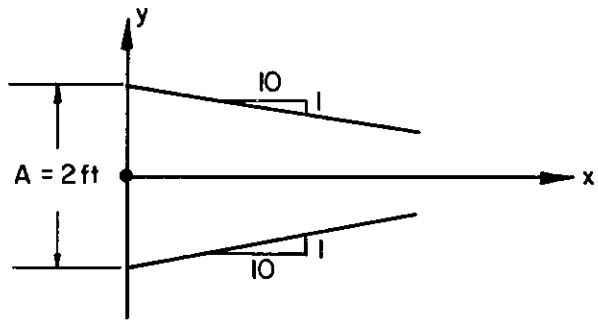

Determine the coefficient of linear deformation at point $x = 0$, $y = 0$ where $V = u = 1$ ft/sec.

Answer:

$$\frac{\partial u}{\partial x} = 0.1 \text{ sec}^{-1}$$

II-2 Indicate the domains of the following figure where the flow can be considered as irrotational and the domains where the flow is rotational. Give the reasons which prevail in your choice.

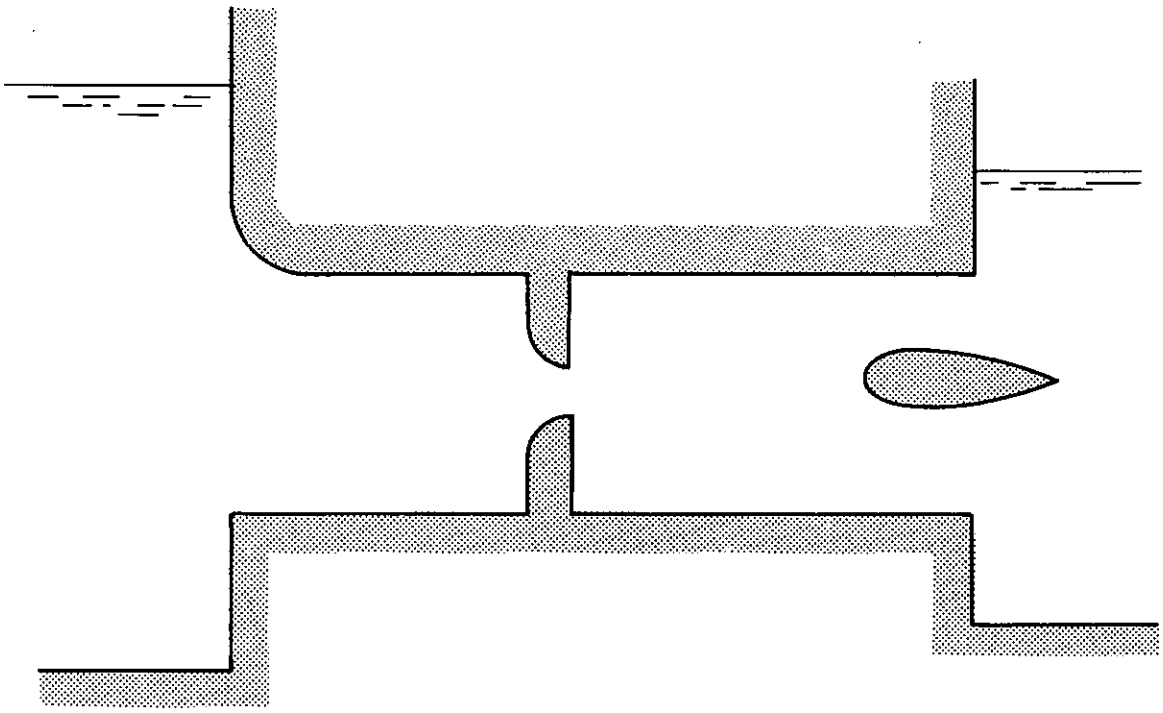

II-3 Determine the coefficients of dilatational and shear deformation and rotation for a flow between two parallel planes separated by a distance $d = 0.01$ feet. One of the planes is assumed to be fixed, the other one moves at a speed $V = 0.1$ ft/sec. The velocity distribution between the two planes is linear.

Answer:

$a = 0$, $h = -\xi = 5\ \text{sec}^{-1}$, all other coefficients are zero.

II-4 The velocity distribution of a laminar flow between two parallel planes is given by the equation

$$u = \frac{1}{2\mu}\,\alpha\, y^2 - \frac{2}{2\mu}\left[\alpha - \frac{2\mu V}{e^2}\right] y$$

where μ is the coefficient of viscosity, e is the distance between the two planes, α is a constant equal to the head loss or decrease of pressure per unit length: $\alpha = \frac{dp}{dx}$. V is the velocity of one of the planes, the other one being assumed to be fixed.

Determine the coefficient of dilatational and shear deformation and rotation as a function of y. Consider the two cases where $\alpha = 0$ and $V = 0$ on one hand, and $\alpha = 0$ and $V = 0$ on the other hand as two particular cases, and explain their significance.

Answer:

$$a = 0, \quad h = -\zeta = \frac{1}{2}\left[\frac{\alpha y}{\mu} - \frac{e}{2\mu}\left(\alpha - \frac{2\mu V}{e^2}\right)\right]$$

If $a = 0$, $V \neq 0$ the flow is created by the moving plane; if $a \neq 0$, $V = 0$ the flow is due to a gradient of pressure $\frac{dp}{dx}$.

II-5 Express velocity components as a function of ϕ in cylindrical (r, θ, z) and spherical (r, Φ, θ) coordinates.

Answer:

Cylindrical: $v_r = \frac{\partial \phi}{\partial r}$, $v_\theta = \frac{1}{r}\frac{\partial \phi}{\partial \theta}$, $w = \frac{\partial \phi}{\partial z}$

Spherical: $v_r = \frac{\partial \phi}{\partial r}$, $v_\theta = \frac{1}{r}\frac{\partial \phi}{\partial \theta}$, $v_\phi = \frac{1}{r \sin\theta}\frac{\partial \phi}{\partial \Phi}$

II-6 Derive the expression for irrotationality in a polar system of coordinates (r, θ). The components of velocity are: radial velocity v_r, tangential velocity v_θ.

Answer:

$$\frac{\partial v_\theta}{\partial r} + \frac{v_\theta}{r} - \frac{1}{r}\frac{\partial v_r}{\partial_\theta} = 0$$

II-7 Consider two coaxial cylinders of radius R_1 and R_2 which are rotating at angular velocity ω_1 and ω_2 respectively. The velocity distribution of the fluid between these two cylinders is given as a function of r by the expression $(R_1 < r < R_2)$

$$v_\theta(r) = \left[\frac{r}{R_2^2 - R_1^2}\right]\left[\left(\omega_2 R_2^2 - \omega_1 R_1^2\right) - \frac{R_1^2 R_2^2}{r^2}(\omega_2 - \omega_1)\right]$$

Determine the value of the rotational coefficient and the relationship between ω_1 and ω_2 which makes the flow motion irrotational.

Answer:

$$v_r = 0$$

$$\frac{1}{2}\left(\frac{\partial v_\theta}{\partial r} + \frac{v_\theta}{r}\right) = \frac{1}{R_2^2 - R_1^2}\left[\omega_2 R_2^2 - \omega_1 R_1^2\right]$$

For irrotationality: ωR^2 = constant, i.e., $v \times R$ = constant

II-8 The equations for an average viscous flow through porous medium are defined by:

$$\frac{\partial p}{\partial x} = K u$$

$$\frac{\partial p}{\partial y} = K v$$

Demonstrate that such a flow is irrotational. The equations for an average fully turbulent flow through rocks are

$$\frac{\partial p}{\partial x} = K u^2$$

$$\frac{\partial p}{\partial y} = K v^2$$

Demonstrate that such a flow is in general rotational.

II-9 Demonstrate that at a given location in a two-dimensional flow, the value of angular rotation is independent of the axis system of

references, i.e.,

$$\frac{1}{2}\left(\frac{\partial v}{\partial x} - \frac{\partial u}{\partial y}\right) = \frac{1}{2}\left(\frac{\partial v'}{\partial x'} - \frac{\partial u'}{\partial y'}\right)$$

u' and v' being the velocity components along the x-axis and the y-axis respectively.

II-10 Demonstrate that

$$\frac{\partial \xi}{\partial x} + \frac{\partial \eta}{\partial y} + \frac{\partial \zeta}{\partial z} \equiv 0$$

CHAPTER III

THE CONTINUITY PRINCIPLE

III-1 ELEMENTARY RELATIONSHIPS

III-1.1 THE CONTINUITY IN A PIPE

The principle of continuity expresses the conservation of mass in a given space occupied by a fluid.

The simplest, well known form of the continuity relationship in elementary fluid mechanics expresses that the discharge for steady flow in a pipe is constant; that is, the relationship:

$$\rho \cdot V \cdot A = \text{constant}$$

where A is the cross sectional area of the pipe and V is the mean velocity.

In the case of an incompressible fluid (ρ = constant) in a uniform pipe (A constant), the continuity relationship becomes simply: V = constant. Then, considering that the axis OX and the axis of the pipe are the same, and that $V = u$, the continuity principle expressed by a differential form becomes: $\frac{dV}{dx} = \frac{\partial u}{\partial x} = 0$.

In general, more complicated forms of continuity relationships have to be considered in hydrodynamics. The case of a two-dimensional motion of an incompressible fluid is now given as a first example. Then the general case will be treated.

III-1.2 TWO-DIMENSIONAL MOTION IN AN INCOMPRESSIBLE FLUID

Since no fluid is being added or subtracted during the motion, the quantity of fluid involved is constant. This may be expressed mathematically in the case of two-dimensional incompressible motion as follows:

Consider rectangular boundaries in space in two-dimensional fluid motion as shown in Figure III-1. The rectangular boundaries have sides of length a and b and are considered to be fixed with respect to the axes.

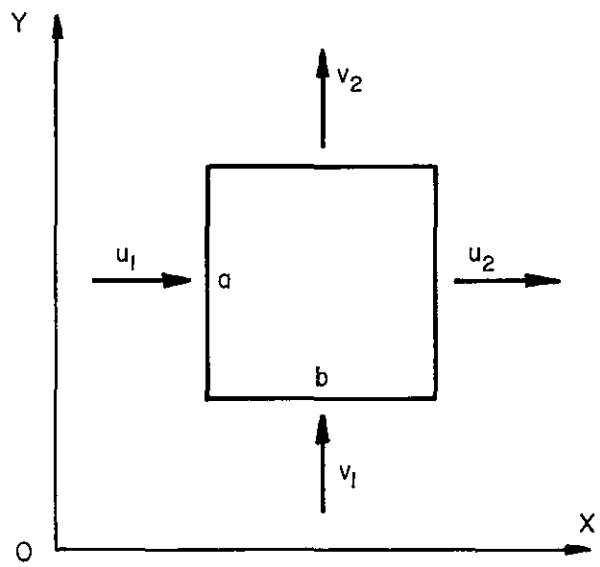

FIGURE III-1
NOTATIONS

The volume of fluid entering the left-hand boundary line by unit of time is $a\,u_1$, and at the same instant, the amount leaving the right-hand boundary line is $a\,u_2$. The difference in amount in the OX direction is thus: $a(u_2 - u_1) = a\,\Delta u$.

Similarly, the difference in amount in the OY direction is: $b\,(v_2 - v_1) = b\,\Delta v$.

Since for continuity no fluid is being added or subtracted, the total must be zero: $a\,\Delta u + b\,\Delta v = 0$; that is, $\frac{\Delta u}{b} + \frac{\Delta v}{a} = 0$.

In the limit, when b and a approach zero, one obtains $\frac{\partial u}{\partial x} + \frac{\partial v}{\partial y} = 0$. This differential form is permitted because of the assumption of a continuous fluid. It should be noted that $\frac{\partial u}{\partial x}$ and $\frac{\partial v}{\partial y}$ are the rates of linear deformation of a fluid particle; hence, in an incompressible fluid, the total sum of linear deformation is nil, as has been previously noted in Chapter II-3.1.

III-1.3 THE CASE OF A CONVERGENT FLOW

An example will demonstrate the physical meaning of the differential form of the continuity equation. The primary purpose of this simple example is to show how to pass from mathematics to physics and vice versa.

Consider a two-dimensional convergent flow of a perfect fluid, as shown in Figure III-2. At sections (1) and (3), v is zero, and u is constant with respect to the distance measured in the OX direction. Hence the continuity relationship is simply $\frac{\partial u}{\partial x} = 0$.

At section (2), $v \neq 0$. the maximum value of v is at the boundaries and v tends to zero at the OX axis by symmetry. Hence the variation of v with respect to y is not zero, even if v equals zero on the axis. Otherwise $\frac{\partial u}{\partial x}$ would be equal to zero and u would be a constant along the axis. On the other hand, $\frac{\partial v}{\partial y}$ is always negative (Figure III-3), because either v or y is negative alternately.

Hence, according to the continuity relationship, $\frac{\partial u}{\partial x}$ is always positive and u increases regularly from section (1) to section (3), which is evident.

III-2 THE CONTINUITY RELATIONSHIP IN THE GENERAL CASE

III-2.1 ESTABLISHMENT OF THE CONTINUITY RELATIONSHIP

Consider a fixed volume of fluid of which the edges dx, dy, dz are parallel to the axes OX, OY, OZ, respectively. (Figure III-4). The continuity relationship is obtained by considering that the change of fluid mass inside the volume $dx\ dy\ dz$ during the time dt is equal to the difference between the rates of influx into and efflux out of the considered volume during the same interval of time.

The fluid mass at the time t is: $\rho\ dx\ dy\ dz$.

After a time dt, because of the change of density with respect to time, the quantity of fluid mass becomes:

$$\left(\rho + \frac{\partial \rho}{\partial t}\ dt \right)\ dx\ dy\ dz$$

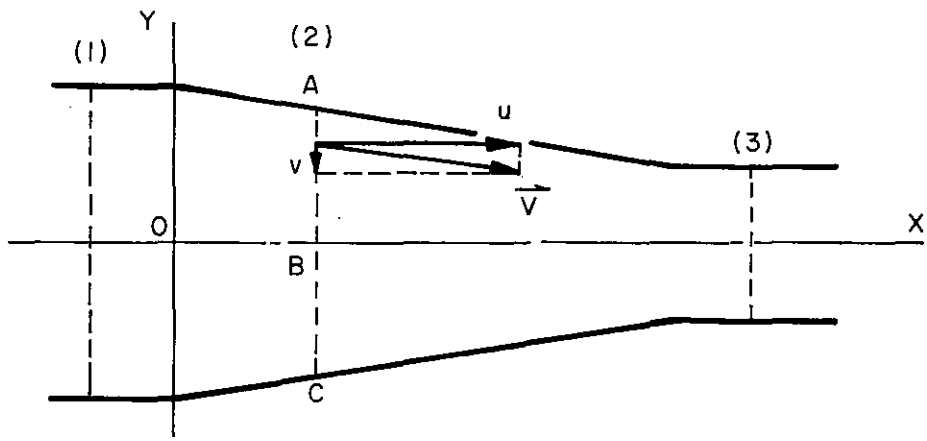

FIGURE III-2
THE CONTINUITY IN A CONVERGENT - NOTATION

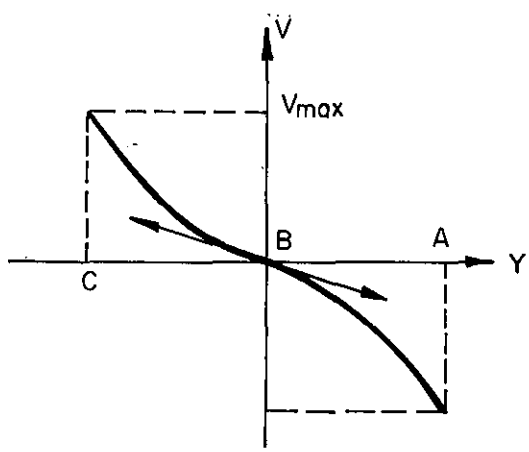

FIGURE III-3
VARIATION OF v IN A CROSS
SECTION OF A CONVERGENT FLOW

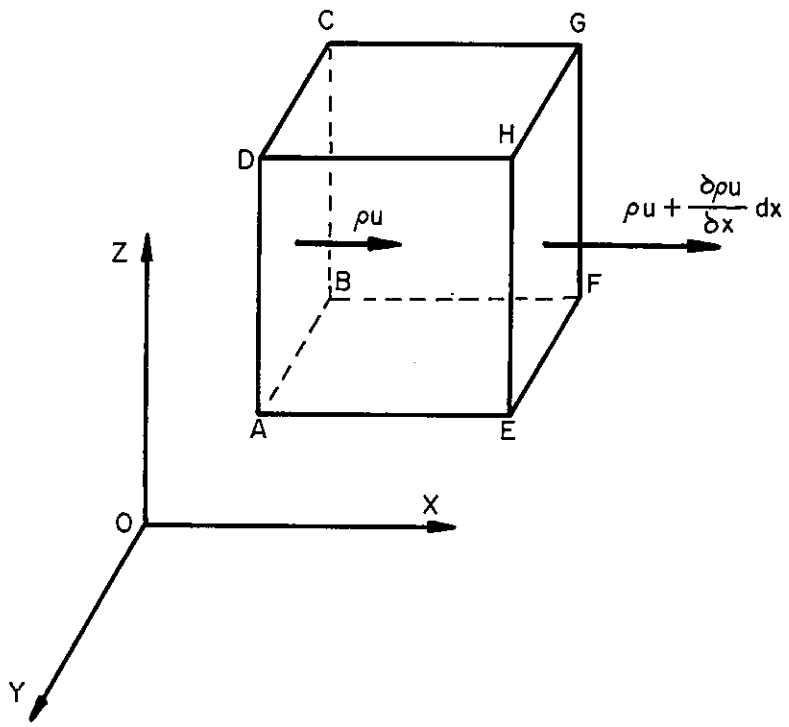

FIGURE III-4
CONTINUITY - NOTATION

Hence the change of fluid mass in a time dt is:

$$\rho \, dx \, dy \, dz - \left(\rho + \frac{\partial \rho}{\partial t} dt \right) dx \, dy \, dz = - \frac{\partial \rho}{\partial t} dt \, dx \, dy \, dz \qquad (1)$$

On the other hand, if one takes into account the change in velocity and in density with respect to space coordinates, the quantity of fluid mass entering through the section ABCD during a time dt, parallel to the OX axis, is the product ρu times the area perpendicular to OX (ABCD) and the time dt. Since ABCD = dy dz, the quantity of fluid mass entering is $\rho u \, dy \, dz \, dt$. The variation of u along AB and AD with respect to dz and dy is of an infinitely small order and is neglected. Now the quantity of fluid mass coming out during the same interval of time through the section EFGH is:

$$\left(\rho u + \frac{\partial \rho u}{\partial x} dx \right) dy \, dz \, dt$$

In the general case, both the density ρ and velocity u are assumed to be changed along dx. Hence the difference is:

$$\left(\rho u + \frac{\partial \rho u}{\partial x} dx \right) dy \, dz \, dt - \rho u \, dy \, dz \, dt = \frac{\partial \rho u}{\partial x} dx \, dy \, dz \, dt$$

Similarly, the difference due to the components of motion parallel to the OY and OZ axes are respectively:

$\frac{\partial \rho v}{\partial y} dx \, dy \, dz \, dt$ due to the difference of discharge across the sections BFGC and AEHD (dx dz)

$\frac{\partial \rho w}{\partial z} dx \, dy \, dz \, dt$ due to the difference of discharge across the sections AEFB and DHGC (dx dy)

The total change of mass contained within the elementary region during the time dt is:

$$\left(\frac{\partial \rho u}{\partial x} + \frac{\partial \rho v}{\partial y} + \frac{\partial \rho w}{\partial z}\right) dx\ dy\ dz\ dt \qquad (2)$$

Equating (1) and (2) yields:

$$-\frac{\partial \rho}{\partial t}\ dx\ dy\ dz\ dt = \left(\frac{\partial \rho u}{\partial x} + \frac{\partial \rho v}{\partial y} + \frac{\partial \rho w}{\partial z}\right) dx\ dy\ dz\ dt$$

and dividing by dx dy dz dt:

$$\frac{\partial \rho}{\partial t} + \frac{\partial \rho u}{\partial x} + \frac{\partial \rho v}{\partial y} + \frac{\partial \rho w}{\partial z} = 0$$

Since $\frac{\partial \rho u}{\partial x} = \rho \frac{\partial u}{\partial x} + u \frac{\partial \rho}{\partial x}$, and similarly for the other terms $\frac{\partial \rho v}{\partial y}$ and $\frac{\partial \rho w}{\partial z}$, the continuity relationship becomes:

$$\frac{\partial \rho}{\partial t} + \rho\left(\frac{\partial u}{\partial x} + \frac{\partial v}{\partial y} + \frac{\partial w}{\partial x}\right) + u\frac{\partial \rho}{\partial x} + v\frac{\partial \rho}{\partial y} + w\frac{\partial \rho}{\partial z} = 0.$$

These continuity relationships can be written in a shorter way as follows:

$$\frac{\partial \rho}{\partial t} + \text{div}\ \rho\vec{V} = 0 \text{ or } \frac{\partial \rho}{\partial t} + \nabla.\ \rho\vec{V} = 0$$

or

$$\frac{\partial \rho}{\partial t} + \rho\ \text{div}\ \vec{V} + \vec{V}.\overrightarrow{\text{grad}}\ \rho = 0$$

or using the tensorial notation $\frac{\partial \rho}{\partial t} + \frac{\partial \rho u_i}{\partial x_i} = 0$ where the subscript i means repeated operations along the OX, OY and OZ directions.

III-2.2 PHYSICAL MEANING AND APPROXIMATIONS

Consider respectively the three groups of terms:

$$\frac{\partial \rho}{\partial t}$$

$$\rho \left(\frac{\partial u}{\partial x} + \frac{\partial v}{\partial y} + \frac{\partial w}{\partial z} \right) \quad \text{or} \quad \rho \ \text{div} \ \vec{V} \quad \text{or} \quad \rho \ \nabla . \vec{V}$$

$$u \frac{\partial \rho}{\partial x} + v \frac{\partial \rho}{\partial y} + w \frac{\partial \rho}{\partial z} \quad \text{or} \quad \vec{V} . \ \overrightarrow{\text{grad}} \ \rho \quad \text{or} \quad \vec{V} . \nabla \ \rho$$

III-2.2.1 The first term, $\frac{\partial \rho}{\partial t}$, is the variation of the density with time at a given point. This term is nil in the case of:

a. incompressible fluid, since ρ is a constant; and

b. a steady motion of a compressible fluid.

This term has to be considered when sound, water hammer, shock waves, etc. are studied.

III-2.2.2 The second group of terms is proportional to the variation of speed in the direction of motion at a given time. In the simple case of a three-dimensional motion of an incompressible fluid

$$\frac{\partial u}{\partial x} + \frac{\partial v}{\partial y} + \frac{\partial w}{\partial z} = 0 \quad \text{or} \quad \begin{array}{l} \text{div} \ \vec{V} = 0 \\ \nabla . \ \vec{V} = 0 \end{array}$$

When div $\vec{V} > 0$, an expansion of the fluid is indicated, and conversely, div $\vec{V} < 0$ signifies a compression.

III-2.2.3 The third group of terms is proportional to the variation of density with respect to the space coordinates at a given time. This

variation is usually negligible in comparison with other variations.

For example, consider a unidimensional sinusoidal acoustic wave. The variation of density is given as a function of time and distance by the relationship $\rho = A \sin (Ct + x)$. The variation of ρ with respect to time t is $\frac{\partial \rho}{\partial t} = A\,C \cos (Ct + x)$, and with respect to the distance x along the OX axis, $\frac{\partial \rho}{\partial x} = A \cos (Ct + x)$. Hence,

$$\frac{\frac{\partial \rho}{\partial x}}{\frac{\partial \rho}{\partial t}} = \frac{1}{C}$$

Since C is usually large compared to the particle velocity u, $u \frac{\partial \rho}{\partial x}$ is usually negligible by comparison with $\frac{\partial \rho}{\partial t}$.

However, there is an exception to this rule: the case of shock waves where the variation of ρ with respect to space is theoretically infinite at the front of the wave. (Figure III-6).

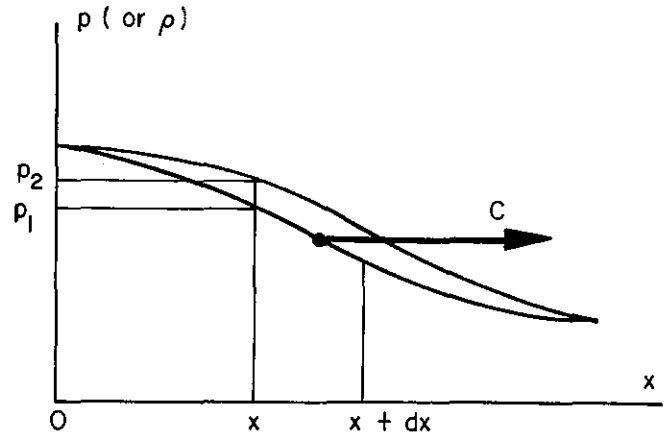

FIGURE III-5
PRESSURE WAVE

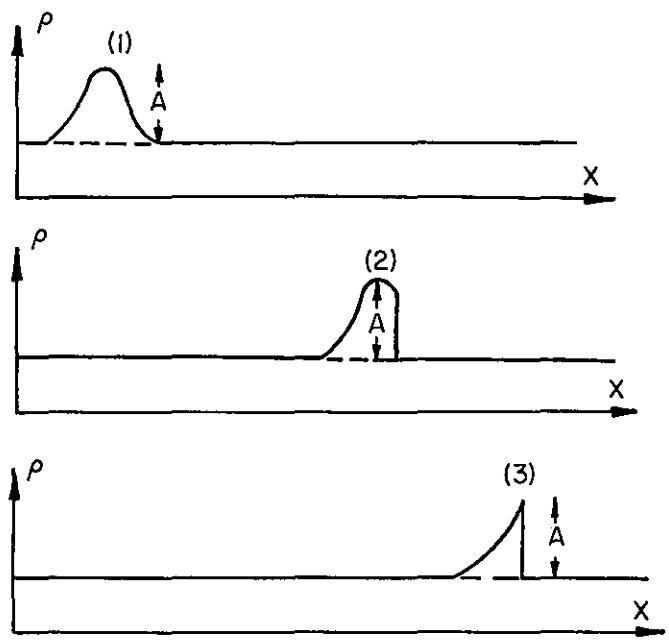

FIGURE III-6
FORMATION OF SHOCK WAVE

This phenomenon occurs when there is a great variation of pressure which has an effect on the celerity of the wave motion which in turn becomes greater than the velocity of sound. A shock wave travels at a higher speed than usual pressure waves such as acoustic sound or water hammer. Hence, when a supersonic flow or an effect of underwater explosion is studied, the variation of the density with respect to the distance has to be taken into account in the continuity relationship.

III-2.2.4 The following table summarizes these considerations:

Uniform flow of an incompressible fluid	$\frac{\partial u}{\partial x} = 0$
Two-dimensional flow of an incompressible fluid	$\frac{\partial u}{\partial x} + \frac{\partial v}{\partial y} = 0$
Three-dimensional flow of an incompressible fluid	$\frac{\partial u}{\partial x} + \frac{\partial v}{\partial y} + \frac{\partial w}{\partial z} = 0$ $\text{div } \vec{V} = 0$
Unsteady motion in a compressible fluid at usual speed. (Acoustic wave, water hammer)	$\frac{\partial \rho}{\partial t} + \rho \left(\frac{\partial u}{\partial x} + \frac{\partial v}{\partial y} + \frac{\partial w}{\partial z} \right) = 0$ $\frac{\partial \rho}{\partial t} + \rho \text{ div } \vec{V} = 0$
Unsteady motion in a compressible fluid at high speed. (Shock wave)	$\frac{\partial \rho}{\partial t} + \frac{\partial \rho u}{\partial x} + \frac{\partial \rho v}{\partial y} + \frac{\partial \rho w}{\partial z} = 0$ $\frac{\partial \rho}{\partial t} + \text{div } \rho \vec{V} = 0$

III-3 SOME PARTICULAR CASES OF THE CONTINUITY RELATIONSHIP: GRAVITY WAVES, PRESSURE WAVES

The continuity relationship is often used in other forms in hydraulics. These forms are not so general but more adapted to integration for the phenomena to be studied. Some examples of the different forms used are provided by the case of unsteady flow, mainly unidimensional either at free surface (channel, river) or under pressure (pipe, gallery).

An unsteady free surface flow results in gravity waves:[1] a change of level with respect to time and space, caused by gravity action. Some examples are: flood waves in a river, bore (translatory waves), and seiche (oscillatory waves). An unsteady flow under pressure results in pressure waves: a change of pressure with respect to time and space, caused by a gradient of pressure. Two examples are: water hammer and acoustic wave (not considered in hydraulics). Such gravity waves and pressure waves are studied from the special continuity relationships given below. They are valid when the distribution of velocity in a cross section is assumed to be a constant.

In both cases, the continuity relationship is obtained by stating that the change of volume of water during the interval of time dt between two cross sections separated by the infinitely small distance dx is equal to the difference between the influx and efflux from the considered volume during the same interval of time.

---

(1) Steady undulations such as undulated jump or flow around a bridge pier are also considered as gravity waves.

III-3.1 TRANSLATORY GRAVITY WAVES

Consider the volume defined by the two cross sections x and x + dx and the free surface at time t. (Figure III-7).

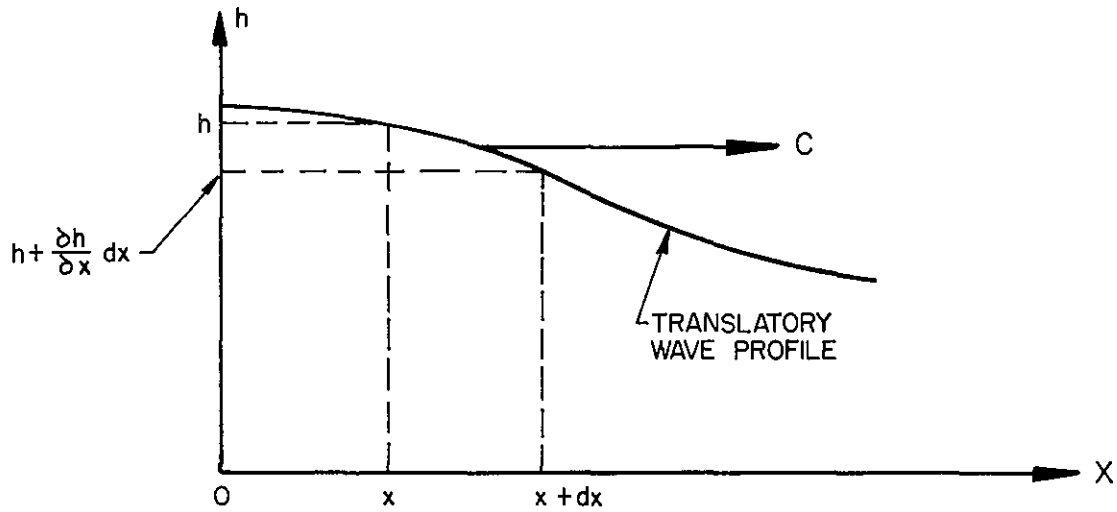

FIGURE III-7
TRANSLATORY WAVE

The volume of influx during a time dt into the considered volume at x is: q dt or h u dt, where q is the discharge, h the depth, and u the horizontal velocity component.

The efflux out of the volume at x+dx is:

$$\left(q + \frac{\partial q}{\partial x} dx\right) dt \qquad \text{or} \qquad \left(h\ u + \frac{\partial h\ u}{\partial x} dx\right) dt$$

Hence the change of volume between these cross sections x and $x + dx$ is a difference

$$- \frac{\partial q}{\partial x} dx\, dt \qquad \text{or} \qquad - \frac{\partial h u}{\partial x} dx\, dt \tag{1}$$

On the other hand the volume at the time t is $h\, dx$, and at the time $t + dt$, since the free surface level changes: $\left(h + \frac{\partial h}{\partial t} dt\right) dx$. Hence the change of volume during time dt is:

$$\frac{\partial h}{\partial t} dt\, dx \tag{2}$$

Equating (1) and (2) and dividing by $dx\, dt$, one obtains $\frac{\partial h}{\partial t} + \frac{\partial q}{\partial x} = 0$, or $\frac{\partial h}{\partial t} + \frac{\partial hu}{\partial x} = 0$; and since $\frac{\partial hu}{\partial x} = u \frac{\partial h}{\partial x} + h \frac{\partial u}{\partial x}$, the continuity relationship becomes:

$$\frac{\partial h}{\partial t} + u \frac{\partial h}{\partial x} + h \frac{\partial u}{\partial x} = 0$$

III-3.2 WATER HAMMER

The continuity equation for an unsteady flow in a pipe is similarly obtained by equating the difference between the influx into and efflux out of a given volume during an interval of time dt to the change in volume of the fluid during the same period of time.

Consider a pipe as shown by Figure III-8 and the two cross sections x and $x + dx$, where the velocities (assumed to be a constant in these cross sections) are u and $u + \frac{\partial u}{\partial x} dx$, respectively. The net inflow during time dt is:

$$\frac{\pi D^2}{4} \left[\left(u + \frac{\partial u}{\partial x} dx\right) - u\right] dt = \frac{\pi D^2}{4} \frac{\partial u}{\partial x} dx\, dt$$

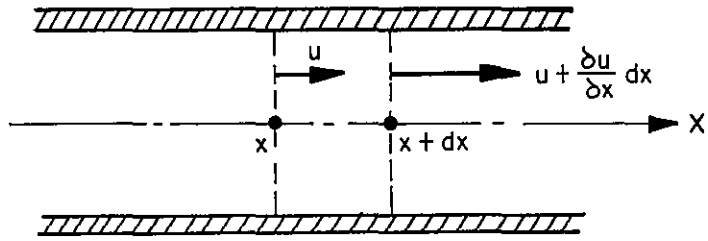

FIGURE III-8
WATER HAMMER - NOTATION

This net inflow has to be equal to the sum of:

(1) the change in volume by compression (or expansion) of the fluid already in the cylinder, and

(2) the change in volume enclosed by the pipe wall as it stretches (or contracts) with the changing pressure.

This increase in pressure in time dt is $\frac{\partial p}{\partial t}$ dt. This causes a compression of the cylinder of fluid equal to $\frac{\partial p}{\partial t}$ dt $\frac{dx}{K}$ where K is the bulk modulus of elasticity of the fluid. Hence the change in volume by reason (1) is:

$$\frac{\pi D^2}{4} \frac{\partial p}{\partial t} dt \frac{dx}{K}$$

The same increase in pressure causes an increase in the stress in the pipe wall equal to: $\frac{\partial p}{\partial t}$ dt $\frac{D}{e E}$ where e is the thickness of the pipe

wall. (See Figure III-9). Under this increased stress the pipe wall stretches in accordance with Hooke's Law by the quantity:

$$\frac{\pi\,(D + dD)}{\pi D} = \frac{N}{E}$$

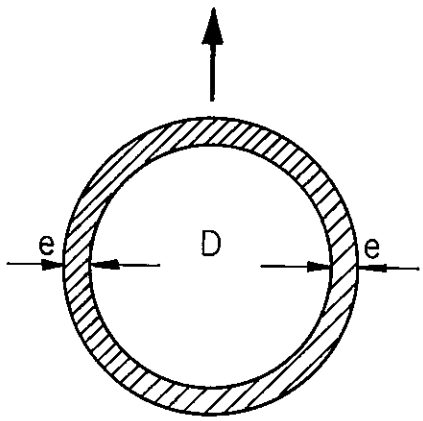

FIGURE III-9
WATER HAMMER - NOTATION

where N is the increase of stress and E the modulus of elasticity of the pipe wall. That is:

$$\frac{dD}{D} = \frac{\frac{\partial p}{\partial t}\,dt \quad \frac{D}{2e}}{E}$$

Now, the increase of volume by reason (2) is:

$$\left[\frac{\pi\,(D + dD)^2}{4} - \frac{\pi D^2}{4}\right] dx = \left(\frac{\pi D\,dD}{2}\right) dx$$

Introducing the above relationship, neglecting second order infinitely small terms, it is found that

$$\frac{\pi D \; dD \; dx}{2} = \frac{\partial p}{\partial t} dt \; \frac{\pi D^2}{4} \; \frac{D}{e E} dx$$

The change of volume by reason (2) is:

$$\frac{\partial p}{\partial t} dt \; \frac{\pi D^2}{4} \; \frac{D}{e E} dx$$

Equating the net inflow with the change of volume by reason (1) and (2), eliminating $\frac{\pi D^2}{4}$ dx dt, and rearranging yields

$$\frac{\partial p}{\partial t} = \left[\frac{1}{K} + \frac{D}{e E} \right]^{-1} \frac{\partial u}{\partial x}$$

III-4 PARTICULAR FORMS OF THE CONTINUITY RELATIONSHIP FOR AN INCOMPRESSIBLE FLUID

III-4.1 IRROTATIONAL FLOW

If the density ρ is a constant, the continuity relationship has been seen to be $\frac{\partial u}{\partial x} + \frac{\partial v}{\partial y} + \frac{\partial w}{\partial z} = 0$.

In the case of irrotational motion, a velocity potential function ϕ has been defined by the relationships:

$$u = \frac{\partial \phi}{\partial x} , \quad v = \frac{\partial \phi}{\partial y} , \quad \text{and} \quad w = \frac{\partial \phi}{\partial z}$$

Hence, introducing these expressions into the continuity relationship yields:

$$\frac{\partial}{\partial x}\frac{\partial \phi}{\partial x} + \frac{\partial}{\partial y}\frac{\partial \phi}{\partial y} + \frac{\partial}{\partial z}\frac{\partial \phi}{\partial z} = 0$$

i.e.

$$\frac{\partial^2 \phi}{\partial x^2} + \frac{\partial^2 \phi}{\partial y^2} + \frac{\partial^2 \phi}{\partial z^2} = 0$$

which can be written $\nabla^2 \phi = 0$. This is the well-known Laplace equation which has been subjected to extensive research in mathematical physics.

III-4.2 LAGRANGIAN SYSTEM OF COORDINATES

It has been explained in Chapter I that it is possible to study problems in hydraulics either in Eulerian coordinates or in Lagrangian coordinates (See I-3.1). Since this last system of coordinates is rarely used, the continuity relationship will be given here without any comment for the simple purpose of recognition in literature:

$$\frac{\partial (x, y, z)}{\partial (x_o, y_o, z_o)} = 1$$

x_o, y_o and z_o are the coordinates of the considered particle at time t_o and x, y, z at time t.

III-1 Demonstrate that the continuity equation for a stream tube can be written

$$\frac{\partial(\rho A)}{\partial t} + \frac{\partial(\rho A V)}{\partial s} = 0$$

A is the cross section of the stream, and ds an element of streamline.

III-2 Consider the two-dimensional motions defined by their velocity components

$$u = A$$

$$v = 0$$

on one hand, and

$$u = Ax + B$$

$$v = 0$$

on the other hand, where A and B are different from zero. Calculate the divergence, and tell in which case the fluid is compressible.

<u>Answer:</u>

First case: $\operatorname{div} \vec{V} = 0$

Second case: $\operatorname{div} \vec{V} = A$

III-3 Establish the continuity equation in a cylindrical system of coordinates (r, θ, z). A polar element of volume $r\,dr\,d\theta\,dz$ will be used. The velocity components will be v_r along a radius, v_θ perpendicular to v_r, and w along the axis OZ.

Answer:

$$\frac{\partial p}{\partial t} + \frac{1}{r}\frac{r}{\partial r}(\rho r v_r) + \frac{1}{r}\frac{\partial \rho v_\theta}{\partial \theta} + \frac{\partial \rho v_z}{\partial z} = 0$$

III-4 Express the Laplace equation $\nabla^2 \phi = 0$ in a cylindrical system of coordinates (r, θ, z).

Answer:

$$\frac{\partial^2 \phi}{\partial r^2} + \frac{1}{r}\frac{\partial \phi}{\partial r} + \frac{1}{r^2}\frac{\partial^2 \phi}{\partial r^2} + \frac{\partial^2 \phi}{\partial z^2} = 0$$

III-5 Establish the continuity equation for a stratified fluid of density varying with z as $\rho = \frac{k}{z}$ ($\frac{\partial \rho}{\partial t}$ will be assumed to be zero).

III-6 Verify that the motion defined by the potential function

$$\phi = -a \frac{k}{m} \frac{\cosh m(d+z)}{\cosh m d} \cos(kt - mx)$$

1) is irrotational; 2) satisfies the continuity equation; 3) is such that $\frac{\partial \phi}{\partial z} = 0$ for $z = -d$.

III-7 Derive the continuity equation and $\nabla^2 \phi$ for an incompressible liquid in spherical polar coordinates (r, Φ, θ) by considering a small volume bounded by the surface: θ, $\theta + d\theta$, Φ, $\Phi + d\Phi$, r, $r + dr$

<u>Answer:</u>

$$\frac{1}{r^2} \frac{\partial}{\partial r} (v_r r^2) + \frac{1}{r \sin\theta} \frac{\partial}{\partial \theta} (v_\theta \sin\theta) + \frac{1}{r \sin\theta} \frac{\partial v_\phi}{\partial \Phi} = 0$$

$$\frac{1}{r^2} \frac{\partial}{\partial r} \left(r^2 \frac{\partial \phi}{\partial \theta}\right) + \frac{1}{r^2 \sin\theta} \frac{\partial}{\partial \theta} \left(\sin\theta \frac{\partial \phi}{\partial \theta}\right) + \frac{1}{r^2 \sin^2\theta} \frac{\partial^2 \phi}{\partial \Phi^2} = 0$$

CHAPTER IV

INERTIA FORCES

IV-1 MASS, INERTIA, ACCELERATION

IV-1.1 THE NEWTON EQUATION

To cause the motion of a mass M, or, more generally, to change the state of an existing motion, it is necessary to apply to this mass a force F, which causes an acceleration $\frac{dV}{dt}$ such that $\vec{F} = M \frac{d\vec{V}}{dt}$. This is a vectorial relationship, i.e. true for both intensity and direction. The product $M \frac{d\vec{V}}{dt}$ is the inertia force, which characterizes the natural resistance of matter to any change in its state of motion.

In fluid mechanics, the considered mass M is the mass of a unit of volume.

$$M = \rho. \left(\text{unit of volume}\right) = \rho$$

where ρ is the density. Hence the fundamental equation of momentun has the form $\vec{F} = \rho \frac{d\vec{V}}{dt}$. Its three components along the three coordinate axes OX, OY, OZ are $\rho \frac{du}{dt}$, $\rho \frac{dv}{dt}$, and $\rho \frac{dw}{dt}$ respectively.

IV-1.2 RELATIONSHIPS BETWEEN THE ELEMENTARY MOTIONS OF A FLUID PARTICLE AND THE INERTIA TERMS

To each kind of motion of the fluid particles that has been analyzed in Chapter II, there corresponds an inertia force, and the relationship between the kind of motion described and the corresponding inertia force is straightforward. This statement is developed.

The elementary components of the change of position of a fluid particle as given in Chapter II are, in the case of a two-dimensional motion,

Translation: The components of the velocity of translation are: u, v

Dilatational Deformation: The components of the velocity of dilatational deformation are:

$$\frac{\partial u}{\partial x} dx \qquad \frac{\partial v}{\partial y} dy$$

Shear Deformation: The components of the velocity of shear deformation are:

$$\frac{1}{2}\left(\frac{\partial u}{\partial y} + \frac{\partial v}{\partial x}\right) dy$$

$$\frac{1}{2}\left(\frac{\partial u}{\partial y} + \frac{\partial v}{\partial x}\right) dx$$

Rotation: The components of the velocity of rotation are:

$$-\frac{1}{2}\left(\frac{\partial v}{\partial x}-\frac{\partial u}{\partial y}\right) dy$$

$$\frac{1}{2}\left(\frac{\partial v}{\partial x}-\frac{\partial u}{\partial y}\right) dx$$

To obtain the values of the inertia forces it is sufficient to take the above values per unit of time in order to obtain the corresponding acceleration and to multiply them by the density ρ.

For example, introducing the relationship $u\,dt = dx$, the inertia caused by the component of velocity of linear deformation is $\frac{\partial u}{\partial x} u\,dt$, i.e., per unit of time $u\frac{\partial u}{\partial x}$. Consequently, the corresponding term is $\rho u \frac{\partial u}{\partial x}$.

Repeating this operation for all the velocity terms given above directly gives the inertia terms due to all kinds of elementary motions.

IV-1.3 TWO MAIN KINDS OF INERTIA FORCES

Two main kinds of inertia forces may be distinguished, corresponding to two main kinds of acceleration or two main kinds of elementary motion:

Local acceleration - corresponding to a variation of the velocity of translation with respect to time.

Convective acceleration - corresponding to a variation of velocity of deformation and rotation with respect to space.

The physical meaning of these accelerations and the corresponding inertia forces is shown first in the following; then their mathematical expression is demonstrated. Chapter V deals with the applied forces F which have to be equated to these inertia forces to obtain the momentum equation.

IV-2 LOCAL ACCELERATION

Local acceleration characterizes any unsteady motion, i.e. motion where the velocity at a given point changes with respect to time. Local acceleration results from a change in the translatory motion of a fluid particle imposed by external forces F.

IV-2.1 EXAMPLES OF FLOW WITH LOCAL INERTIA

Local acceleration occurs in the following cases:

IV-2.1.1 When the velocity, keeping in the same direction along a straight line, changes in intensity. If the velocity increases at a given point which involves a positive local acceleration, the inertia of the mass of fluid in motion tends to reduce the motion.

Alternatively, if the velocity decreases, which corresponds to a negative local acceleration, the mass of fluid in motion tends to continue to move forward because of its inertia.

This is the case of motion in uniform flow in pipes or tunnels, where fluid stops or starts or balances because of a gate movement. Some hydraulic engineering applications where such a local inertia has to be taken into account are surge tanks, water hammer and locks.

IV-2.1.2 When the velocity maintains the same intensity but changes its direction. In this case the inertia force is due to the centrifugal acceleration.

For example, in a periodic gravity wave in infinite depth, the intensity of the velocity at a given point is a constant but its direction revolves continuously at all points. (Figure IV-1).

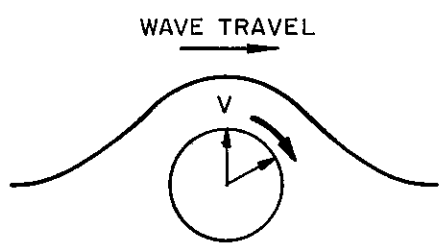

FIGURE IV-1
PERIODIC GRAVITY WAVE IN DEEP WATER

The change of velocity with respect to time is exerted in direction only.

IV-2.1.3 When the velocity changes at a given point both in intensity and direction. Some examples of this case are:

Turbulent flow (This important case is fully developed in Chapters VII and VIII)

Alternate vortices

Displacement caused by a ship in motion

Bore and tide in an estuary

Periodic gravity waves in shallow water

IV-2.2 MATHEMATICAL EXPRESSION OF LOCAL INERTIA

The mathematical expression of the inertia forces caused by a local acceleration is given by the change in the velocity of the translatory motion with respect to time only. Assuming that the velocity is constant with respect to distance, the inertia force is equal to $\rho \frac{d\vec{V}}{dt} = \rho \frac{\partial \vec{V}}{\partial t}$ of which the components along the three axes OX, OY and OZ are respectively: $\rho \frac{\partial u}{\partial t}$, $\rho \frac{\partial v}{\partial t}$, and $\rho \frac{\partial w}{\partial t}$.

IV-3 CONVECTIVE ACCELERATION

Convective acceleration characterizes any non-uniform flow, i.e. when the velocity at a given time changes with respect to distance. It is sometimes called field acceleration.

Convective acceleration results from any linear or angular deformation, or from a change in the rotation of fluid particles, imposed by external forces F.

IV-3.1 EXAMPLES

In a convergent pipe, it has been seen that the velocity of a fluid particle tends to increase as the streamlines converge. That

is, the velocity of the fluid particle increases with respect to space. This is a positive convective acceleration. The fluid tends to resist this acceleration by convective inertia.

In a divergent conduit, the velocity decreases and the fluid tends to continue its motion with the same velocity because of its inertia. The applied forces cause a negative convective acceleration.

Expansion or contraction of a compressible fluid is the sum of linear deformations and also results in corresponding inertia forces.

In all these examples considered, components of velocity keep the same direction but their intensity changes.

IV-3.1.2 Mathematical Expression

It has been seen that the linear deformation velocity components are:

$$\left.\begin{array}{l} \left.\begin{array}{l} \dfrac{\partial u}{\partial x}\,dx \\[2ex] \dfrac{\partial v}{\partial y}\,dy \end{array}\right\} \text{Two-dimensional motion} \\[2ex] \dfrac{\partial w}{\partial z}\,dz \end{array}\right\} \text{Three-dimensional motion}$$

Hence the corresponding accelerations are: $\frac{\partial u}{\partial x}\frac{dx}{dt}$, $\frac{\partial v}{\partial y}\frac{dy}{dt}$, and $\frac{\partial w}{\partial z}\frac{dz}{dt}$. Introducing $u = \frac{dx}{dt}$, $v = \frac{dy}{dt}$, and $w = \frac{dz}{dt}$, and multiplying by the density ρ, the corresponding inertia forces become:

$$\rho u \frac{\partial u}{\partial x} = \frac{1}{2} \rho \frac{\partial u^2}{\partial x}$$

$$\rho v \frac{\partial v}{\partial y} = \frac{1}{2} \rho \frac{\partial v^2}{\partial y}$$

$$\rho w \frac{\partial w}{\partial z} = \frac{1}{2} \rho \frac{\partial w^2}{\partial z}$$

It should be noticed that the last group of expressions, which may be written $\frac{\partial}{\partial x}\left(\rho \frac{u^2}{2}\right)$, etc., shows that this inertia force is equal to the variation of kinetic energy with respect to space along the three direction axes OX, OY, and OZ, respectively.

IV-3.2 THE CASE OF SHEAR DEFORMATION

IV-3.2.1 Example

In a bend, where the fluid particles are angularly deformed, the fluid paths are curved and because of its inertia, the fluid tends to continue along a straight line. This causes a centrifugal force proportional to the change of direction which is imposed by the applied forces.

It is possible for the velocity of a fluid particle to keep the same intensity along its path, but with a change in direction. This is the case of free vortex motion.

IV-3.2.2 Mathematical Expression

It has been seen that the velocity components of angular deformation for a two-dimensional motion are:

$$\frac{1}{2}\left(\frac{\partial u}{\partial y} + \frac{\partial v}{\partial x}\right) dy$$

$$\frac{1}{2}\left(\frac{\partial u}{\partial y} + \frac{\partial v}{\partial x}\right) dx$$

Hence, as in the previous case, using the substitutions $u = \frac{dx}{dt}$ and $v = \frac{dy}{dt}$, the corresponding inertia forces become:

$$\frac{1}{2}\rho v\left(\frac{\partial u}{\partial y} + \frac{\partial v}{\partial x}\right)$$

$$\frac{1}{2}\rho u\left(\frac{\partial u}{\partial y} + \frac{\partial v}{\partial x}\right)$$

IV-3.3 THE CASE OF A CHANGE OF ROTATION

IV-3.3.1 Example

In the entrance to a pipe (Figure IV-2), because of the change in friction forces, there is a variation of rotation of the fluid particles. Hence there are inertia forces corresponding to the natural resistance of the fluid to change its rotational motion. In a uniform pipe, the rotation of particles exists but there is no change in rotational intensity and the corresponding acceleration is zero.

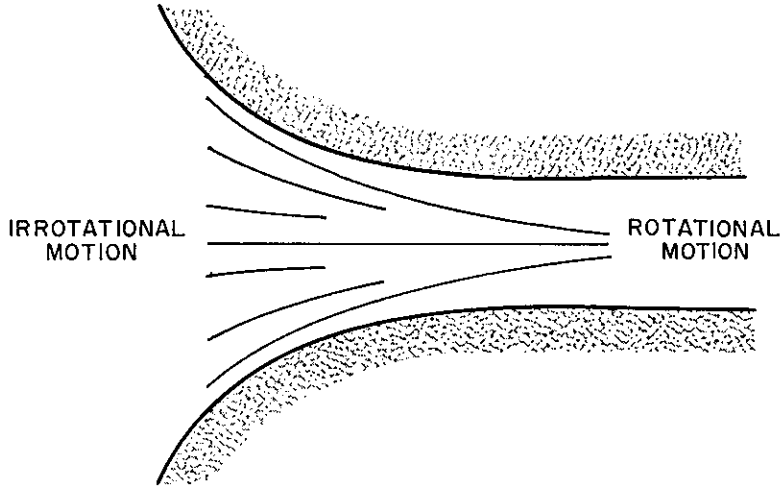

FIGURE IV-2
ZONE OF ACCELERATION OF ROTATION

IV-3.3.2 Mathematical Expression

As in the two previous cases, since

$$-\frac{1}{2}\left(\frac{\partial v}{\partial x}-\frac{\partial u}{\partial y}\right) dy$$

$$\frac{1}{2}\left(\frac{\partial v}{\partial x}-\frac{\partial u}{\partial y}\right) dx$$

are the velocities of the components of rotation in a two-dimensional motion, the corresponding inertia forces are obtained equal to:

$$-\frac{1}{2}\rho v\left(\frac{\partial v}{\partial x}-\frac{\partial u}{\partial y}\right)$$

$$\frac{1}{2}\rho u\left(\frac{\partial v}{\partial x}-\frac{\partial u}{\partial y}\right)$$

It has been shown that it is possible to assume that the motion is irrotational when friction effects are negligible. (See II-4.1). It is evident that the same conditions lead to neglect of rotational inertia forces.

IV-4 GENERAL MATHEMATICAL EXPRESSIONS OF INERTIA FORCES

IV-4.1 In the general case both local acceleration and convective acceleration occur at the same time. The most simple example is when a fluid oscillates in a non-uniform curved pipe. Hence, in the general case, $\vec{V}$ and its components u, v, and w are functions of both time and space coordinates:

$$V = f(x, y, z, t) \qquad \begin{cases} u\,(x, y, z, t) \\ v\,(x, y, z, t) \\ w\,(x, y, z, t) \end{cases}$$

The total differential of $\vec{V}$ being $d\vec{V} = \frac{\partial \vec{V}}{\partial t} dt + \frac{\partial \vec{V}}{\partial x} dx + \frac{\partial \vec{V}}{\partial y} dy + \frac{\partial \vec{V}}{\partial z} dz$, the total acceleration is given by the total differential of $\vec{V}$ (or its components u, v, w) with respect to time:

$$\frac{d\vec{V}}{dt} = \frac{\partial \vec{V}}{\partial t} + \frac{\partial \vec{V}}{\partial x}\frac{dx}{dt} + \frac{\partial \vec{V}}{\partial y}\frac{dy}{dt} + \frac{\partial \vec{V}}{\partial z}\frac{dz}{dt}$$

$$\begin{cases} \frac{du}{dt} = \frac{\partial u}{\partial t} + \frac{\partial u}{\partial x}\frac{dx}{dt} + \frac{\partial u}{\partial y}\frac{dy}{dt} + \frac{\partial u}{\partial z}\frac{dz}{dt} \\ \frac{dv}{dt} = \frac{\partial v}{\partial t} + \frac{\partial v}{\partial x}\frac{dx}{dt} + \frac{\partial v}{\partial y}\frac{dy}{dt} + \frac{\partial v}{\partial z}\frac{dz}{dt} \\ \frac{dw}{dt} = \frac{\partial w}{\partial t} + \frac{\partial w}{\partial x}\frac{dx}{dt} + \frac{\partial w}{\partial y}\frac{dy}{dt} + \frac{\partial w}{\partial z}\frac{dz}{dt} \end{cases}$$

Introducing $u = \frac{dx}{dt}$, $v = \frac{dy}{dt}$, and $w = \frac{dz}{dt}$, and multiplying by the density ρ, the inertia forces are obtained as follows:

$$\rho\left(\frac{\partial u}{\partial t} + u\frac{\partial u}{\partial x} + v\frac{\partial u}{\partial y} + w\frac{\partial u}{\partial z}\right)$$

$$\rho\left(\frac{\partial v}{\partial t} + u\frac{\partial v}{\partial x} + v\frac{\partial v}{\partial y} + w\frac{\partial v}{\partial z}\right)$$

$$\rho\left(\frac{\partial w}{\partial t} + u\frac{\partial w}{\partial x} + v\frac{\partial w}{\partial y} + w\frac{\partial w}{\partial z}\right)$$

Local Acceleration Terms — Convective Acceleration Terms

These expressions may be modified to give more expressive forms. This is the purpose of paragraphs IV-4.2 and IV-4.3.

IV-4.2 Following the similar procedure used in the study of the elementary motions of fluid particles (Sec. II-5.2), that is, adding and subtracting $\frac{1}{2}\rho v\frac{\partial v}{\partial x}$ and $\frac{1}{2}\rho w\frac{\partial w}{\partial x}$ to the first line above, gives the following expressions which substantiate the previous physical considerations:

$$\rho\left[\frac{\partial u}{\partial t} + u\frac{\partial u}{\partial x} + \frac{1}{2}v\left(\frac{\partial v}{\partial x} + \frac{\partial u}{\partial y}\right) + \frac{1}{2}w\left(\frac{\partial u}{\partial z} + \frac{\partial w}{\partial x}\right) + \frac{1}{2}w\left(\frac{\partial u}{\partial z} - \frac{\partial w}{\partial x}\right) - \frac{1}{2}v\left(\frac{\partial v}{\partial x} - \frac{\partial u}{\partial y}\right)\right]$$

Local acceleration resulting in a change in translatory motion — Acceleration in Linear Deformation — Acceleration in Angular Deformation — Acceleration in Rotation

Convective Acceleration Terms

Then, adding and subtracting $\frac{1}{2}\ \rho w \frac{\partial w}{\partial y}$ and $\frac{1}{2}\ \rho u \frac{\partial u}{\partial y}$ to the second line, and $\frac{1}{2}\ \rho u \frac{\partial u}{\partial z}$ and $\frac{1}{2}\ \rho v \frac{\partial v}{\partial z}$ to the third line will give two similar expressions.

IV-4.3 Alternatively, it is often useful to transform the acceleration terms as follows in order to emphasize both the kinetic energy terms and the rotational terms. Adding and subtracting $\rho\left(v \frac{\partial v}{\partial x} + w \frac{\partial w}{\partial x}\right)$ to the first line, $\rho\left(u \frac{\partial u}{\partial y} + w \frac{\partial w}{\partial y}\right)$ to the second line, and $\rho\left(u \frac{\partial u}{\partial z} + v \frac{\partial v}{\partial z}\right)$ to the third line gives the following expression, valid along the OX axis:

$$\rho\left(\frac{\partial u}{\partial t} + u \frac{\partial u}{\partial x} + v \frac{\partial u}{\partial y} + w \frac{\partial u}{\partial z} + v \frac{\partial v}{\partial x} - v \frac{\partial v}{\partial x} + w \frac{\partial w}{\partial x} - w \frac{\partial w}{\partial x}\right)$$

and two similar expressions for the two other directions OY and OZ.

This above expression may be written:

$$\rho\left[\frac{\partial u}{\partial t} + \left(u \frac{\partial u}{\partial x} + v \frac{\partial v}{\partial x} + w \frac{\partial w}{\partial x}\right) + v\left(\frac{\partial u}{\partial y} - \frac{\partial v}{\partial x}\right) + w\left(\frac{\partial u}{\partial z} - \frac{\partial w}{\partial x}\right)\right]$$

Since:

$$u \frac{\partial u}{\partial x} = \frac{1}{2} \frac{\partial u^2}{\partial x}, \quad v \frac{\partial v}{\partial x} = \frac{1}{2} \frac{\partial v^2}{\partial x} \text{ and } w \frac{\partial w}{\partial x} = \frac{1}{2} \frac{\partial w^2}{\partial x},$$

$$u \frac{\partial u}{\partial x} + v \frac{\partial v}{\partial x} + w \frac{\partial w}{\partial x} = \frac{1}{2} \frac{\partial}{\partial x}\left(u^2 + v^2 + w^2\right) = \frac{\partial}{\partial x} \frac{V^2}{2}.$$

Moreover, introducing the coefficients of the rotational vector

$$2\eta = \left(\frac{\partial u}{\partial z} - \frac{\partial w}{\partial x}\right)$$

$$2\zeta = \left(\frac{\partial v}{\partial x} - \frac{\partial u}{\partial y}\right)$$

yields finally as an expression for the inertia forces - along the OX axis

$$\rho\left[\frac{\partial u}{\partial t} + \frac{\partial}{\partial x}\left(\frac{V^2}{2}\right) + 2(\eta w - \zeta v)\right]$$

Similarly, it may be found that the inertia forces along the OY and OZ axes are:

$$\rho\left[\frac{\partial v}{\partial t} + \frac{\partial}{\partial y}\left(\frac{V^2}{2}\right) + 2(\zeta u - \xi w)\right]$$

$$\rho\left[\frac{\partial w}{\partial t} + \frac{\partial}{\partial z}\left(\frac{V^2}{2}\right) + 2(\xi v - \eta u)\right]$$

These three expressions may be written vectorially in a more concise manner as follows:

$$\rho\left(\frac{\partial \vec{V}}{\partial t} + \nabla\left(\frac{V^2}{2}\right) - \vec{V} \times \nabla \times \vec{V}\right)$$

$$\rho\left(\frac{\partial \vec{V}}{\partial t} + \underbrace{\overrightarrow{\text{grad}}\,\frac{V^2}{2} - \vec{V} \times \overrightarrow{\text{curl}}\,\vec{V}}_{\text{Convective acceleration}}\right)$$

Local acceleration — Kinetic energy term — Rotational term

It has to be noticed that the convective inertia term

$$\rho\ \overrightarrow{\text{grad}}\ \frac{V^2}{2} \qquad \left\{\begin{array}{l} \rho\ \dfrac{\partial}{\partial x}\ \dfrac{V^2}{2} \\[2ex] \rho\ \dfrac{\partial}{\partial y}\ \dfrac{V^2}{2} \\[2ex] \rho\ \dfrac{\partial}{\partial z}\ \dfrac{V^2}{2} \end{array}\right.$$

$$\rho\ \nabla\ \frac{V^2}{2}$$

is, in fact, the variation with respect to space of the kinetic energy $\rho\ \frac{V^2}{2}$ of the particle.

IV-5 ON SOME APPROXIMATIONS

IV-5.1 CASES WHERE THE LOCAL ACCELERATION IS NEGLECTED

IV-5.1.1 A rigorous steady motion never exists. There is always a beginning and an end. However, many motions in hydraulics are actually very close to being steady during a given interval of time. In this case, since $\vec{V}$ does not vary with time, the corresponding inertia term $\frac{\partial \vec{V}}{\partial t}$ is zero. (The very important case of turbulent motion will be studied in Chapters VII and VIII.)

However, there exist many unsteady motions in hydraulic engineering in which the variation of velocity with respect to time is studied without taking into account the local acceleration and the corresponding inertia terms.

This occurs when the velocities are slow and their variations with time are very slow. For instance, in the case of a periodic motion in which the period T is very long: $\frac{\partial V}{\partial t} \approx \frac{V}{T}$. Hence $\rho \frac{\partial V}{\partial t}$ would be negligible in comparison with other forces.

Some particular cases where this approximation is valid are:

Flow in a porous medium: variation of the ground water table with respect to time.

Flood wave in a river.

Variation of level in a reservoir because of the variation of the upstream river flux, the spillway and bottom outlet control, and turbined discharge.

Emptying of a basin by a small valve.

In all these cases, the flow is considered as a succession of steady motions and calculated as such without taking account of local inertia.

IV-5.1.2 Example

As an example of unsteady motion analyzed as a steady motion, the variation of level in a basin is studied. (Figure IV-3).

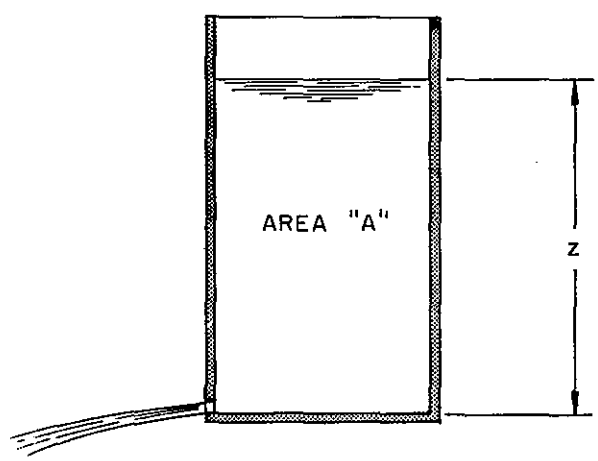

FIGURE IV-3
UNSTEADY MOTION CONSIDERED AS
A SUCCESSION OF STEADY MOTION

Consider the emptying of a rectangular basin of horizontal cross-sectional area A. The volume of water above a small hole of area S is A times z. The

variation of z as a function of time is given by the differential equation $A\ dz = Q\ dt$ where $Q = C_d S V$, C_d being the coefficient of discharge and V being given by the formula of Torricelli: $V = \sqrt{2gz}$. The Torricelli formula is valid only if the local inertia is negligible.

Introducing the value of $Q = C_d S \sqrt{2gz}$ in the above equation and integrating gives the total time required to empty such a basin, where z_o is the initial depth:

$$T = \frac{2A}{C_d S \sqrt{2g}} \sqrt{z}$$

If S were large and A small, it would be necessary to take account of the local inertia to calculate T.

Another similar example, previously cited, is that of the variation of level in a reservoir of horizontal section $S(z)$ because of the variation of the upstream river flux. The corresponding calculation of the economical height of the dam, the number of turbines and the spillway capacity are deduced by this method:

$$Q(t)\ \Delta t = S(z)\ \Delta z + Q_t\ \Delta t + Q_s(z)\ \Delta t + f(S)\ \Delta t$$

Upstream Influx of the River	Change of Level in Reservoir	Turbined Volume	Volume over the Spillway	Loss by Evaporation

IV-5.2 CASES WHERE THE CONVECTIVE ACCELERATION IS NEGLECTED OR APPROXIMATED

IV-5.2.1 Slow Motion

The local inertia term is proportional to the velocity V, i.e. it is a linear term, while the convective acceleration terms are quadratic: proportional to V^2 (or a product u^2, v^2, w^2, uv, uw, vw). Hence, since the convective acceleration introduces a quadratic term, the general equation of momentum is non-linear.

It is well known that it is easy to mathematically solve many linear differential systems of equations. But it is often difficult to solve a non-linear system. This is the chief cause of difficulty in fluid mechanics. For this reason, it is helpful to know when it is possible to neglect this quadratic term.

When V tends to zero, a quadratic term proportional to V^2 tends to zero more rapidly than a linear term proportional to V. (Figure IV-4). Hence, in practice, when V is small, V^2 is negligible and the convective inertia term is negligible in comparison with the other terms expressing the local inertia and applied forces.

Some examples are:

Periodical gravity wave theory (1st order of approximation).

Flow in a porous medium, which obeys the linear law of Darcy. (Such a kind of motion is defined only by

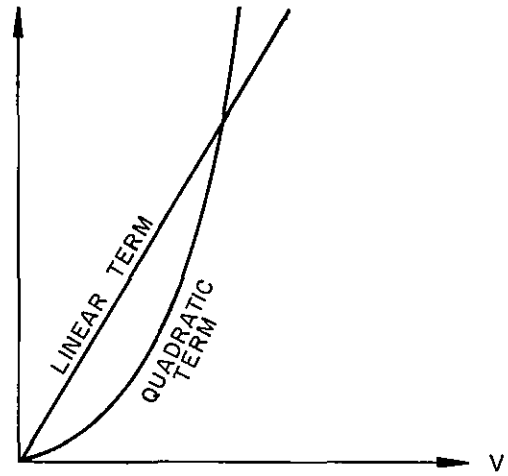

FIGURE IV-4
QUADRATIC TERMS BECOME NEGLIGIBLE
WHEN V TENDS TO ZERO

an equality of applied forces since the local acceleration is negligible, also.)

Motion of a small sphere in a viscous fluid (Stokes' formula).

IV-5.2.2 Solution Given by a Series

Sometimes partial effect of the convective acceleration is taken into account by the use of an approximate solution given by a number of terms of a series. (Example: gravity wave theories to the second order, third order, etc. of approximation; laminar boundary layer theory; etc.)

IV-5.2.3 Irrotational Motion

Another method to take account of a partial effect of the convective acceleration is by the assumption of irrotationality when the friction effects are negligible. This point has been developed and will be more fully developed in later chapters.

IV-5.2.4 Simplification of Some Terms

Sometimes only some terms of the convective acceleration may be neglected. The case of a two-dimensional boundary layer on a flat plate is given here as an example (Figure IV-5). This example is particularly helpful in understanding how the mathematical simplifications may be based on physical considerations. Hypothesis: u is large in comparison with v; $\frac{\partial u}{\partial x}$ is large in comparison with $\frac{\partial v}{\partial x}$; $\frac{\partial u}{\partial x}$ is small in comparison with $\frac{\partial u}{\partial y}$; hence, the two-dimensional convective inertia components:

large x small + small x large

$$\rho\left(u \quad \frac{\partial u}{\partial x} + v \quad \frac{\partial u}{\partial y}\right)$$

large x very small + small x small

$$\rho\left(u \quad \frac{\partial v}{\partial x} + v \quad \frac{\partial v}{\partial y}\right)$$

become more simply $\rho\left(u\frac{\partial u}{\partial x} + v\frac{\partial u}{\partial y}\right)$ since $u\frac{\partial v}{\partial x}$ and $v\frac{\partial v}{\partial y}$ are negligible.

Similar approximations are made to analyze the development of a jet.

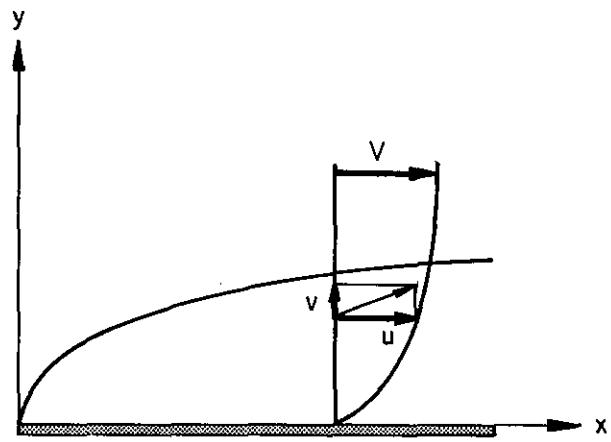

FIGURE IV-5
INTRODUCTION OF SIMPLIFYING ASSUMPTIONS
IN THE THEORY OF DEVELOPMENT OF A
BOUNDARY LAYER

IV-5.2.5 Linearization of Quadratic Terms

Linearizing the quadratic terms consists, for instance, of substituting for the quadratic terms: $y = A\,V^2$ or $y = A_1\,V\,dV$, the linear terms as: $y_1 = B\,V(+\,cst)$ or $y_2 = B_1\,V$ or $y_2 = B_2\,dV$, such that:

B = mean value of $A\,V$ (Figure IV-6)

B_1 = mean value of $A_1\,d\,V$

B_2 = mean value of $A_1\,V$

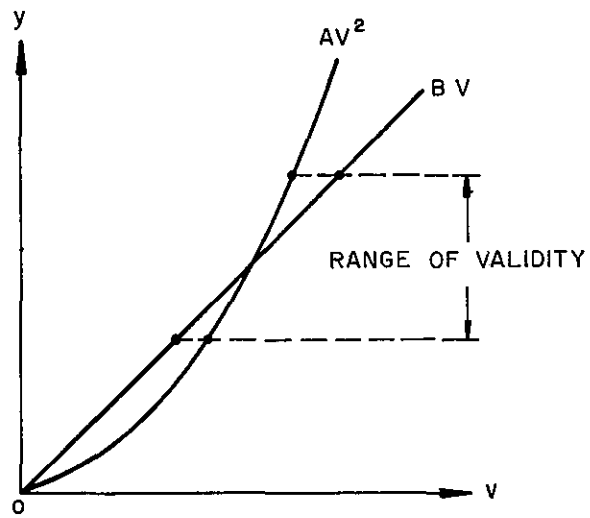

FIGURE IV-6
LINEARIZATION

This method is applicable when V or dV varies within a small range; otherwise, the value of B, B_1, B_2 must be changed and the problems solved step by step. Surge tank stability calculations, laminar flow stability study and motion of a sphere in a viscous fluid (Oseen's theory) are some examples where this method is used. The Oseen theory is an attempt to improve the Stokian theory for the flow around a sphere by taking into account some linearized effects of convective inertia.

IV-1 Consider an unsteady two-dimensional flow where the velocity components at point $x = 1$, $y = 1$ at time $t = 0$ are $u = 1$ ft/sec, $v = 2$ ft/sec and at time $t = 1$ sec, $u = 2$ ft/sec, $v = 3$ ft/sec.

Moreover, at time $t = 0$, the velocity components at point $x = 2$, $y = 1$ are $u = 1.2$ ft/sec and $v = 2.4$ ft/sec and at point $x = 1$, $y = 2$ they are $u = 1.1$ ft/sec, $v = 1.8$ ft/sec. Calculate the value of the total acceleration by assuming that the variations of velocity with time and distance are linear.

Answer:

$$\frac{dV}{dt} = 1.72 \text{ ft/sec}^2$$

IV-2 Calculate the total variation of temperature of a train which travels 300 miles a day in the northern direction. The mean daily variation of temperature is -2°F per 1000 miles. The daily variation at a given location is $4 \sin \frac{2\pi t}{T}$ $^{\circ}$F where $T = 24$ hours.

Answer:

$$\frac{dT}{dt} = \frac{\pi}{3} \cos \frac{\pi t}{12} - \frac{1}{40} \qquad {}^{\circ}\text{F/hr} \qquad t \text{ in hours}$$

IV-3 In the case of a progressive acoustic wave in a pipe, such that

$$u = a \sin \frac{2\pi}{L} (x - Ct)$$

calculate the ratio of convective inertia to local inertia.

IV-4 Consider a basin such as shown in the following figure, where the particle velocity at the orifice $(z = 0,\ x = 4 \text{ feet})$ is $V = \sqrt{2g\eta}$, $z = \eta$ is the height of the free surface above the orifice. The horizontal area of the basin being $A = 4 \text{ ft}^2$, determine:

1) The variation of the free surface with respect to time, i.e., the function $\eta(t)$ at time $t = 0$, $\eta_o = 20$ feet. The local inertia will be neglected for this calculation.

2) The local inertia at point $x = 3$, $z = 0$, i.e., in the converging section $(\rho = 1.94)$.

3) The convective inertia at the same point.

4) Is the neglection of the local inertia a valid assumption? Explain. The friction will be neglected.

5) When a constant discharge $q_o = 1 \text{ ft}^3/\text{sec}$ is poured into the tank, establish the function $\eta(t)$ $(\eta_o = 20 \text{ feet})$ and determine η when $t \to \infty$.

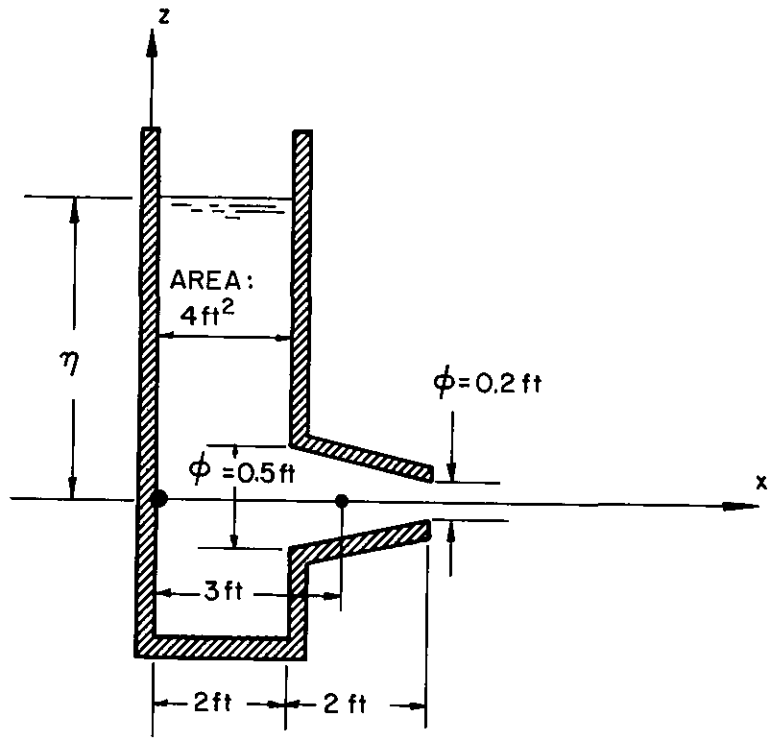

Answer:

1) $\eta = \left[\frac{141 - t}{31.7}\right]^2$ feet

2) $\rho \frac{\partial u}{\partial t} = 0.16 \text{ lbs/ft}^3$

3) $\rho u \frac{\partial u}{\partial x} = 1.78 \pi \sqrt{2 g \eta} \text{ lbs/ft}^3$

4) Local inertia << convective inertia at any time.

(It can be found that they would be equal when $\eta = 0.014$ feet, but the equations are no longer valid.)

5) $\eta \rightarrow 15.7$ ft when $t \rightarrow \infty$

$$t = \frac{2A}{B^2}\left[B\left(\eta_o^{\frac{1}{2}} - \eta^{\frac{1}{2}}\right) + q_o \log \frac{B\,\eta_o^{\frac{1}{2}} - q_o}{B\,\eta^{\frac{1}{2}} - q_o}\right]$$

$$\text{where} \quad B = \frac{\pi \Phi^2}{4} \sqrt{2g}$$

IV-5 Determine the convective inertia terms which can be neglected in a jet.

IV-6 The influx of discharge into a reservoir is defined by the equation

$$Q(t) \text{ ft}^3/\text{sec} = 10{,}000 \, [1.5 - \sin kt]$$

where $k = \frac{2\pi}{T}$ and T is a period of one year. The horizontal area of the reservoir is defined by

$$A(z) = 10{,}000 \, z^2$$

The top of the spillway for flood discharge is located at an elevation $z = 100$ feet and has a discharge capacity

$$Q_s \text{ ft}^3/\text{sec} = C \ell \, [z - 100] \sqrt{2g(z - 100)}$$

where the coefficient of discharge $C = 0.5$, and the length of the spillway $\ell = 100$ feet. The turbined discharge is constant and equal to 7000 ft^3/sec.

Determine the variation of the level of the free surface in the reservoir as a function of time and the maximum discharge over the

spillway for each year following time $t = 0$. The maximum possible discharge over the spillways will also be determined. At time $t = 0$, one will take the free surface elevation at $z = 30$ feet.

IV-7 Consider a periodic two-dimensional oscillation in a rectangular tank (seiche) of length ℓ and depth d ($\ell >> d$). The period of oscillation is $T = \frac{2\ell}{\sqrt{gd}}$. The horizontal velocity component u is assumed to be a constant along a vertical and is a function of time only. The equation of the free surface is ($a << d$):

$$h = d + a \cos mx \cos kt$$

$$m = \frac{2\pi}{L}, \quad L = T\sqrt{gd}, \quad k = \frac{2\pi}{T}$$

Determine the maximum value of u and w and the location where they are maximum. Some simplifying assumptions will be accepted for these calculations. Determine the expression for the local inertia and the convective inertia, their maximum values, and the ratio of the maximum value of convective inertia to the maximum value of the local inertia. Present a criterion permitting the evaluation when the convective inertia is negligible.

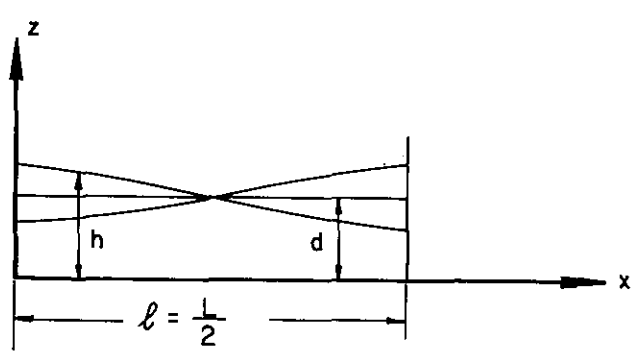

Answer:

$$u_{max} = a\sqrt{g/d} \quad \text{at} \quad x = \frac{\ell}{2}$$

$$w_{max} = ka \quad \text{at} \quad x = 0,\ \ell, \text{ and } z = d$$

$$\frac{\left|\rho\, u \frac{\partial u}{\partial x}\right|_{max}}{\left|\rho \frac{\partial u}{\partial t}\right|_{max}} = \frac{a}{d}$$

IV-8 Demonstrate that

$$\frac{du}{dt} = \frac{\partial u}{\partial t} + 2\,(w\,\eta + v\,\zeta) + \frac{\partial}{\partial x}\left(\frac{V^2}{2}\right)$$

and find similar expressions for $\frac{dV}{dt}$ and $\frac{dw}{dt}$.

IV-9 Expression the components of acceleration A_r, A_θ, A_z referring to a cylindrical system of coordinates.

Answer:

r-direction:

$$A_r = \frac{\partial v_r}{\partial t} + v_r \frac{\partial v_r}{\partial r} + \frac{v_\theta}{r}\frac{\partial v_r}{\partial \theta} + v_z \frac{\partial v_r}{\partial z} - \frac{v_\theta^2}{r}$$

θ-direction

$$A_\theta = \frac{\partial v_\theta}{\partial t} + v_r \frac{\partial v_\theta}{\partial r} + \frac{v_\theta}{r}\frac{\partial v_\theta}{\partial \theta} + v_z \frac{\partial v_\theta}{\partial z} + \frac{v_r\, v_\theta}{r}$$

z-direction

$$A_z = \frac{\partial v_z}{\partial t} + v_r \frac{\partial v_z}{\partial r} + \frac{v_\theta}{r} \frac{\partial v_z}{\partial \theta} + v_z \frac{\partial v_z}{\partial z}$$

IV-10 The components of velocity u, v, w are now defined in a natural system of coordinates, i.e., the axes OX and OY are defined from a given point along and perpendicularly, respectively, to a streamline. Give the components of acceleration. In a second case, where it will be assumed that paths and streamlines are different, the axis will be defined at a given point with respect to paths. Then give also the components of acceleration (R is the radius of curvature of the path).

Answer:

1) $\frac{\partial V}{\partial t} + \frac{\partial (V^2/2)}{\partial x}$ and $\frac{V^2}{R}$

2) $\frac{\partial u}{\partial t} + \frac{\partial (V^2/2)}{\partial x}$, $\frac{\partial v}{\partial t} + \frac{V^2}{R}$, $\frac{\partial w}{\partial t}$

CHAPTER V

APPLIED FORCES

V-1 INTERNAL AND EXTERNAL FORCES

Considering an isolated elementary mass of fluid, the applied forces consist of internal and external forces.

V-1.1 INTERNAL FORCES

Internal forces result from the interaction of the interior points of the considered mass of fluid. According to the principle that action equals reaction, these internal forces balance in pairs and their sum and total torque is rigorously zero. (Figure V-1). However, it will be seen in Chapter XIII that the work of these internal forces is not zero, although their sum is zero. It is for this reason that it is important to mention their existence.

V-1.2 EXTERNAL FORCES

The forces on the boundaries of the considered particle of fluid, so-called surface force, and the forces which are always acting in the same direction on its mass, so-called body or volume forces, are not balanced. These are the external forces.

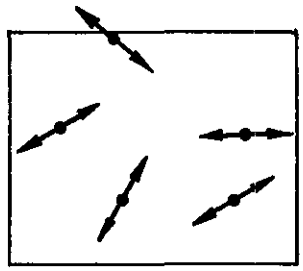

FIGURE V-1
ACTION EQUALS REACTION: INTERNAL
FORCES BALANCE IN PAIRS

V-1.2.1 Surface Forces

Surface forces result from forces acting from outside on the limits of the considered volume. They are caused by molecular attraction. They decrease very quickly away from the boundaries of the considered particle of fluid, and their action is limited to a very thin layer which, in practice, according to the assumption that the fluid is a continuous medium, can be considered as infinitesimally thin and blended with the surface of the fluid particle.

These surface forces are, in practice:

Normal forces -- due to pressure

Shearing forces -- due to viscosity

These two kinds of forces also exist within the particle, but are always balanced in pairs and their sum is zero, as previously noted. The work of these internal forces is not zero. For example,

the head loss in a pipe results from the work of the internal viscous forces. This question is also developed in Chapter XIII.

V-1.2.2 Body Forces

Body forces result from an external field (such as gravity or magnetic field) which acts on each element of the considered volume in a given direction. For this reason, they are called body or volume forces. Except for some rare cases, for example the study of the motion of a fluid metal in a magnetic pump, only gravitational force has to be considered in fluid mechanics. It is known that this gravitational force is considered as acting in the same fixed direction, except in some studies of ocean currents where the gravity acceleration must be considered as radial.

V-1.3 REMARKS ON EXTERNAL AND INTERNAL FORCES

The distinction between external and internal forces is not restricted to the study of an elementary particle of fluid. For example, the theory of hydraulic jump, the head loss in a sudden enlargement in a pipe, and the Bernoulli equation in a pipe can be studied or demonstrated by taking into account the difference between external and internal forces (or the work of these forces) in a definite volume of fluid. This question will be dealt with in Chapters XI and XIII.

Other forces may be considered as applied external forces. Two examples are:

Capillary forces due to the difference of molecular attraction between two media -- of particular importance in free surface flow through a porous medium; and

Inertia caused by the Coriolis acceleration due to the earth's rotation -- when tide motion, sea currents and wind are concerned.

These two kinds of forces will not be dealt with in the following work.

V-2 GRAVITY FORCES

Similar to the inertia forces, the volume forces are proportional to the mass of the fluid and they are proportional to the acceleration caused by an external field. Hence, in the case of gravity action, the volume force per unit of volume is simply equal to its weight: $\varpi = \rho g$, where g is the acceleration due to gravity.

This force is independent of the motion and is the same in statics or in any viscous or turbulent motion, and is equal to the weight of the elementary fluid particle: $\rho g \, dx \, dy \, dz$.

The gravity force is expressed in a differential form in the three axis system OX, OY, OZ (the vertical axis OZ being positive upwards) as follows: let X, Y and Z be the three components of gravity force along the three axes OX, OY, OZ. It is evident that X and Y equal zero. The three components X, Y and Z of gravity force are:

$$X = 0$$

$$Y = 0$$

$$Z = -\rho g = -\frac{\partial}{\partial z}(\rho g z)$$

which becomes, vectorially: $-\overrightarrow{\text{grad}}\,(\rho g z)$ since $X = \frac{\partial}{\partial x}(\rho g z) = 0$ and $Y = \frac{\partial}{\partial y}(\rho g z) = 0$.

As far as the motion of a gas is concerned in engineering practice, the gravity force is neglected (except, for example, in meteorology or in the calculation for chimneys and ventilation openings, where the phenomena are influenced by the variations of gravity forces due to density changes).

V-3 PRESSURE FORCES

Pressure forces result from the normal components of the molecular forces near the boundary of the considered volume. The pressure intensity at a point is obtained by dividing the normal force against an infinitely small area by this area.

V-3.1 PRESSURE INTENSITY, PRESSURE FORCE AND DIRECTION

The pressure intensity is a scalar quantity which is absolutely independent of the orientation of this area. This may be demonstrated by considering a triangular two-dimensional element in a fluid at rest. (Figure V-2).

Since there is no motion, inertia forces and viscous forces are zero, and the only forces are gravity and pressure. The projections of these forces along the OX and OY axes yield the equalities:

$$p_x\, dy - p\, ds \sin \alpha = 0$$

$$p_y\, dx - p\, ds \cos \alpha = \rho g \frac{dx\, dy}{2}$$

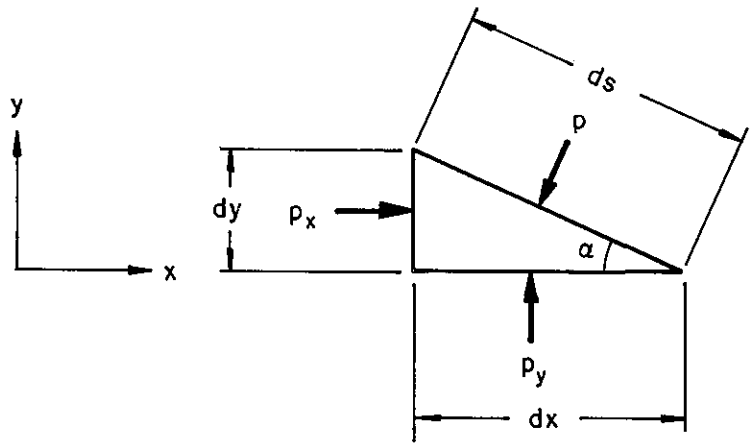

FIGURE V-2
PRESSURE INTENSITY IS INDEPENDENT OF ORIENTATION

Introducing $dy = ds \sin \alpha$, $dx = ds \cos \alpha$, and neglecting $\rho g \frac{dx\, dy}{2}$ (being of the second order of smallness), one obtains $p = p_x$, $p = p_y$. Hence, $p = p_x = p_y$.

Since α is any arbitrary angle, the pressure is seen to be the same in all directions. A similar demonstration is possible for the three-dimensional elements of a fluid.

However, it is evident that the gradient of pressure force (which is a vector) changes with direction. In the same way, the force caused by pressure against an area (which is a vector) changes direction as the normal to the considered area changes direction.

V-3.2 RATE OF PRESSURE FORCE PER UNIT OF VOLUME

Consider an elementary fluid particle (dx dy dz) (Figure V-3). The pressure force due to the external adjacent fluid particle acting against the side A B C D is: p x Area A B C D = p dy dz. The pressure force against the other side acts in the opposite direction and may be written:

$$-\left(p + \frac{\partial p}{\partial x} dx\right) (\text{Area EFGH}) = -\left(p + \frac{\partial p}{\partial x} dx\right) dy\, dz$$

Hence, the difference of pressure forces acting in opposite directions is:

$$p\, dy\, dz - \left(p + \frac{\partial p}{\partial x} dx\right) dy\, dz = -\frac{\partial p}{\partial x} dx\, dy\, dz$$

Similarly, the pressure force differences acting in the OY and OZ directions are $-\frac{\partial p}{\partial y} dx\, dy\, dz$ and $-\frac{\partial p}{\partial z} dx\, dy\, dz$.

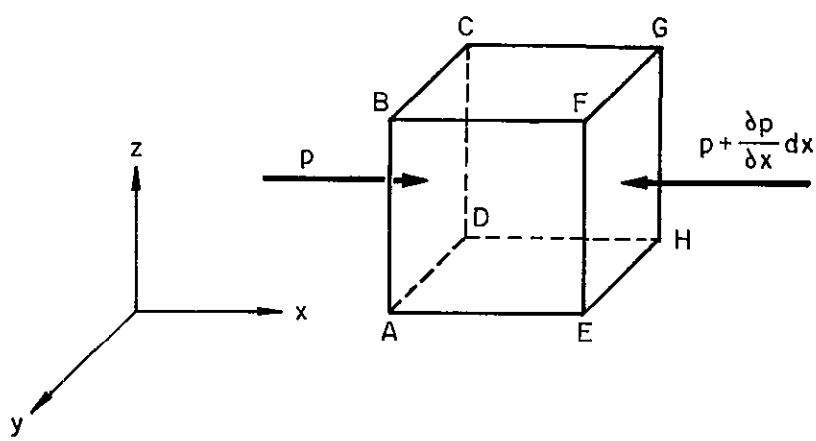

FIGURE V-3

Hence, the rate of change of pressure force per unit of volume is given by the three components $-\frac{\partial p}{\partial x}$, $-\frac{\partial p}{\partial y}$, and $-\frac{\partial p}{\partial z}$, which can be written vectorially: $-\overrightarrow{\text{grad}}\,(p)$.

V-3.3 FLUID MOTION AND GRADIENT OF PRESSURE

It is interesting to note that the motion of the fluid particle does not depend upon the absolute value of p, but only upon the gradient of p. Consider the motion in a tunnel as shown in Figure V-4. The motion depends upon the difference between the upstream and downstream levels only. This property is often used to study motion under pressure in a scale model. However, cavitation occurs if p falls below a critical value.

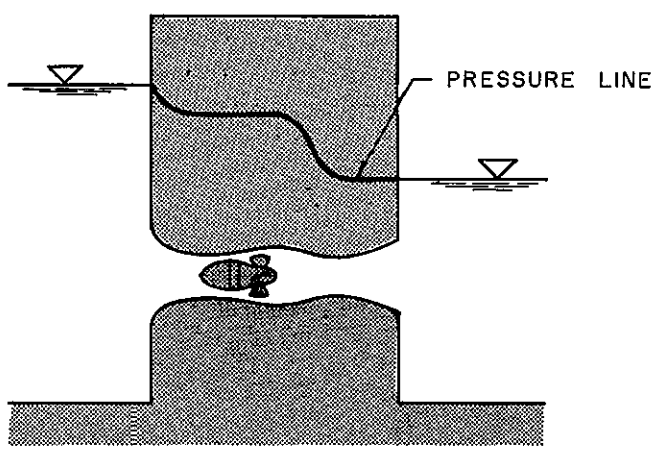

FIGURE V-4
THE MOTION DOES NOT DEPEND ON THE ABSOLUTE VALUE OF THE PRESSURE BUT ITS GRADIENT

V-3.4 PRESSURE AND GRAVITY

The total force due to the pressure force and gravity force per unit volume is:

$$\overrightarrow{\text{grad}}\ p + \overrightarrow{\text{grad}}\ \rho g z = \overrightarrow{\text{grad}}\,(p + \rho g z)$$

The sum of these two linear quantities $(p + \rho g z)$ is a constant in hydrostatics since $p - p_A = -\rho g z$ where p_A is a constant external pressure (atmospheric). This property is also verified in a cross section of a uniform flow as in a channel or in a pipe, or more generally when the curvature of the paths is negligible or the motion is very slow (see X-2.1.3). Hence the sum $(p + \rho g z)$ may often be conveniently replaced by the single term p^*: $p^* = p + \rho g z$, such that $p^* = \text{cst}$ or $\frac{\partial p^*}{\partial z} = 0$, or $\overrightarrow{\text{grad}}\, p^* = 0$. OZ is parallel to the considered cross section, i.e., in practice OZ being most often vertical. While $\frac{p}{\rho g}$ is known as the pressure head, $\frac{p^*}{\rho g}$ is called the piezometric head.

In the general case, pressure and gravity forces have a total sum which varies with distance: $\overrightarrow{\text{grad}}\, p^*$ and its components $\frac{\partial p^*}{\partial x}$, $\frac{\partial p^*}{\partial y}$, $\frac{\partial p^*}{\partial z}$, are different from zero.

V-4 VISCOUS FORCES

V-4.1 MATHEMATICAL EXPRESSION FOR THE VISCOUS FORCES

Shear stresses are present because of fluid viscosity. This resistence is caused by the transfer of molecular momentum.

The friction force is assumed to be proportional to the coefficient of viscosity μ and to the rate of angular deformation: $\tau = \mu \frac{\partial V}{\partial n}$.

Consider a two-dimensional element of fluid (Figure V-5). The friction force on the side AB of length dx is: $\tau\, dx = \mu \frac{\partial u}{\partial y} dx$. Since the velocity at C is $(u + \frac{\partial u}{\partial y} dy)$, the friction force on the side CD is:

$$(\tau + \frac{\partial \tau}{\partial y} dy)\, dx = \mu \frac{\partial}{\partial y} (u + \frac{\partial u}{\partial y} dy)\, dx = \mu \frac{\partial u}{\partial y} dx + \mu \frac{\partial^2 u}{\partial y^2} dy\, dx.$$

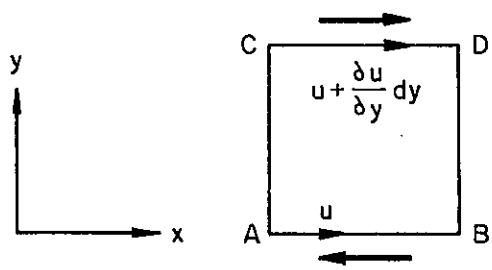

FIGURE V-5
TWO-DIMENSIONAL ELEMENT OF FLUID

These forces are in opposite direction, since if the external particle GHCD against the side CD acts in the OX direction, the external particle ABEF against the side AB is pushed in the same direction OX by the particle ABCD. Consequently, the particle ABEF acts in the opposite direction. Hence the difference of these friction forces is:

$$\frac{\partial \tau}{\partial y}\, dx\, dy = \mu \frac{\partial^2 u}{\partial y^2}\, dx\, dy$$

Dividing by dx dy, the friction force per unit of area is:

$$\frac{\partial \tau}{\partial y} = \mu \frac{\partial^2 u}{\partial y^2}$$

More generally, for a three-dimensional incompressible fluid, it is possible to demonstrate that the friction force components per unit of volume are:

$$\mu \left(\frac{\partial^2 u}{\partial x^2} + \frac{\partial^2 u}{\partial y^2} + \frac{\partial^2 u}{\partial z^2} \right) = \mu \nabla^2 u$$

$$\mu \left(\frac{\partial^2 v}{\partial x^2} + \frac{\partial^2 v}{\partial y^2} + \frac{\partial^2 v}{\partial z^2} \right) = \mu \nabla^2 v$$

$$\mu \left(\frac{\partial^2 w}{\partial x^2} + \frac{\partial^2 w}{\partial y^2} + \frac{\partial^2 w}{\partial z^2} \right) = \mu \nabla^2 w$$

They are written vectorially:

$$\mu \left(\frac{\partial^2 \vec{V}}{\partial x^2} + \frac{\partial^2 \vec{V}}{\partial y^2} + \frac{\partial^2 \vec{V}}{\partial z^2} \right) = \mu \nabla^2 \vec{V}$$

V-4.2 MATHEMATICAL CHARACTERISTICS

Since μ is considered as a constant, the momentum equation is a second order differential equation because of friction forces. In reality, the coefficient of viscosity depends upon temperature, which depends on friction force in return; however, this variation of temperature caused by friction is too small to influence the motion by variation of the coefficient of viscosity. This is not always

the case, particularly when an external source of heat causes a very high gradient of temperature, as in a heat exchanger of an atomic pile. Then it is necessary to consider μ as a variable with respect to distance. The viscous term becomes non-linear.

V-4.3 APPROXIMATIONS MADE ON VISCOUS FORCES

It has been shown physically that sometimes it is possible to consider friction effects as negligible. (Chapter II, II-4.1.2).

From the above demonstration, it may be seen that it is possible to neglect friction forces when the second differential of speed ($\nabla^2 \vec{V}$) is small. This is often so out of the boundary layer where the fluid motion is similar to that of a perfect fluid.

Sometimes it is possible to neglect only one part of the viscous friction terms. For example, as explained in paragraph II-5.2.4, in a two-dimensional laminar boundary layer or in a jet, $\frac{\partial^2 v}{\partial x^2}$ and $\frac{\partial^2 v}{\partial y^2}$ may be neglected since v is small in comparison to u (see Figure IV-5), and also $\frac{\partial^2 u}{\partial x^2}$ may be neglected since $\frac{\partial u}{\partial x}$ is small.

Hence, only the term $\frac{\partial^2 u}{\partial y^2}$ and the corresponding friction force $\mu \frac{\partial^2 u}{\partial y^2}$ has to be taken into account.

V-5 SOME THEORETICAL CONSIDERATIONS OF SURFACE FORCES

V-5.1 A GENERAL EXPRESSION FOR SURFACE FORCES

Surface forces, as previously seen, consist of pressure force and friction force. These surface forces may be introduced

without taking account of their physical nature. It will be seen that the advantage of such a method of expressing the surface forces lies in its applicability to any kind of motion, e.g. perfect, viscous or turbulent, compressible or incompressible. However, the values of these surface forces are expressed differently when their physical nature is taken into account.

V-5.2 THE NINE COMPONENTS OF THE EXTERNAL FORCES

Consider an elementary mass of fluid in the form of a cube; its edges are parallel to the three coordinate axes OX, OY and OZ, as shown in Figure V-6.

On each side of this elementary cube, surface forces may be completely defined by three components parallel to the three coordinate axes. Two of these components are shear stresses while the third is a normal stress.

Since a cube has six sides, 18 components have to be considered. These components are defined with the help of two subscripts. σ are the normal forces and τ are the shearing forces. The first subscript x, y, or z refers to the axis normal to the considered side. The second subscript x, y or z refers to the direction in which the force acts.

The pairs of parallel forces acting on two opposite sides of the cube act in opposite directions, and their difference is obtained by a simple partial derivatives in the direction of the distance between these two considered sides.

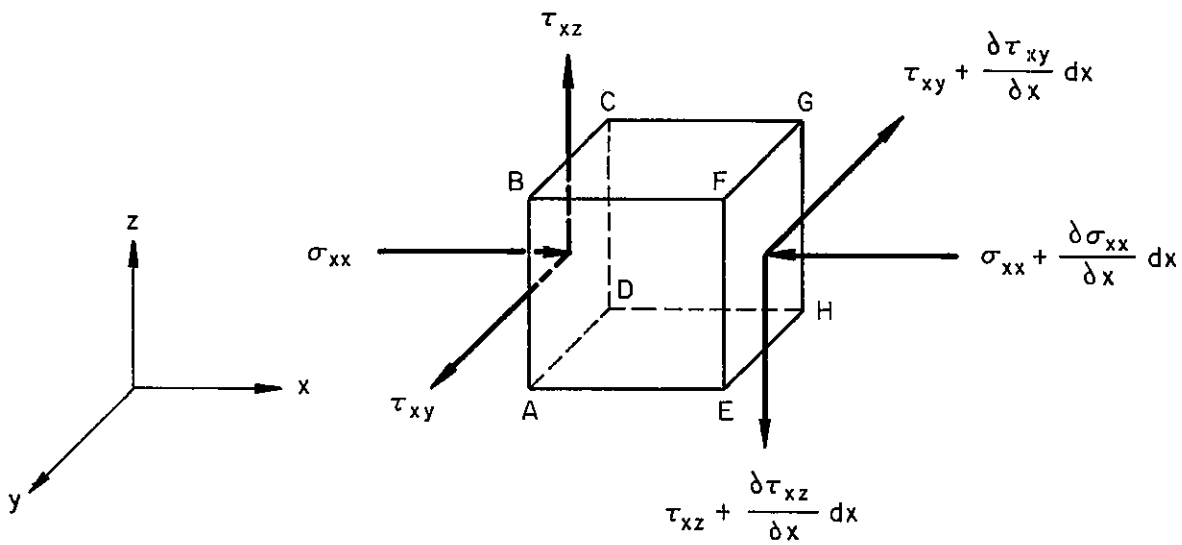

FIGURE V-6
NOTATION FOR SURFACE FORCES

Hence, the external forces may be defined by a tensor of rank two:

$$\begin{vmatrix} \sigma_{xx} & \tau_{yx} & \tau_{zx} \\ \tau_{xy} & \sigma_{yy} & \tau_{zy} \\ \tau_{xz} & \tau_{yz} & \sigma_{zz} \end{vmatrix}$$

These forces are completely given by Table V-1.

Now, the addition of all the forces per unit volume acting in the same direction yields:

TABLE V-1

		Stresses Applied to the Side Normal to the Axis					
		OX		OY		OZ	
On the side of area (See Figure V-6)		ABCD dy dz	EFGH dy dz	BFGD dx dz	AEHC dx dz	AEFB dx dy	CHGD dx dy
In the Direction of	OX	σ_{xx}	$(\sigma_{xx} + \frac{\partial \sigma_{xx}}{\partial x} dx)$	τ_{yx}	$(\tau_{yx} + \frac{\partial \tau_{yx}}{\partial y} dy)$	τ_{zx}	$(\tau_{zx} + \frac{\partial \tau_{zx}}{\partial z} dz)$
	OY	τ_{xy}	$(\tau_{xy} + \frac{\partial \tau_{xy}}{\partial x} dx)$	σ_{yy}	$(\sigma_{yy} + \frac{\partial \sigma_{yy}}{\partial y} dy)$	τ_{zy}	$(\tau_{zy} + \frac{\partial \tau_{zy}}{\partial z} dz)$
	OZ	τ_{xz}	$(\tau_{xz} + \frac{\partial \tau_{xz}}{\partial x} dx)$	τ_{yz}	$(\tau_{yz} + \frac{\partial \tau_{yz}}{\partial y} dy)$	σ_{zz}	$(\sigma_{zz} + \frac{\partial \sigma_{zz}}{\partial z} dz)$

In the OX direction: $\left(\frac{\partial \sigma_{xx}}{\partial x} + \frac{\partial \tau_{yx}}{\partial y} + \frac{\partial \tau_{zx}}{\partial z}\right)$

In the OY direction: $\left(\frac{\partial \tau_{xy}}{\partial x} + \frac{\partial \sigma_{yy}}{\partial y} + \frac{\partial \tau_{zy}}{\partial z}\right)$

In the OZ direction: $\left(\frac{\partial \tau_{xz}}{\partial x} + \frac{\partial \tau_{yz}}{\partial y} + \frac{\partial \sigma_{zz}}{\partial z}\right)$

V-5.3 THE SIX COMPONENTS OF LAMÉ

On the other hand, consider the torque of a fluid particle about one edge (for example, A in Figure V-7).

The total sum of the torque caused by the shearing stresses is:

$$\tau_{xy} (dy\, dz)\, dx - \tau_{yx} (dz\, dx)\, dy$$

This torque is equal to the mass times the square of the radius of gyration $(dR)^2$ times the square of the angular velocity $(\omega)^2$, which may be written:

$$\rho\, dx\, dy\, dz\, (dR)^2\, \omega^2$$

Since dR is infinitesimally small, having the same order as dx, dy and dz, $(dR)^2$ is of the second order of smallness and the speed of gyration becomes infinite, which is physically impossible. Hence, the total torque must be zero. This condition is possible only when $\tau_{xy} = \tau_{yx}$.

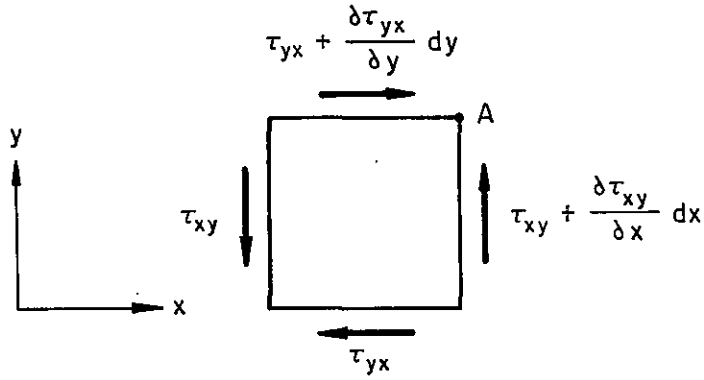

FIGURE V-7

Similarly, it may be shown that $\tau_{yz} = \tau_{zy}$ and $\tau_{xz} = \tau_{zx}$. Hence, the nine components of the tensor of external force are reduced to the six so-called components of Lamé.

$$\begin{vmatrix} \sigma_{xx} & \tau_{xy} & \tau_{xz} \\ \tau_{xy} & \sigma_{yy} & \tau_{yz} \\ \tau_{xz} & \tau_{yz} & \sigma_{zz} \end{vmatrix}$$

V-5.4 VALUE OF THE LAMÉ COMPONENTS IN SOME PARTICULAR CASES

V-5.4.1 In the case of a <u>perfect fluid</u>, the shearing stresses are zero and the normal forces become simply the pressure forces:

$$\sigma_{xx} = \sigma_{yy} = \sigma_{zz} = -p$$

$$\tau_{xy} = \tau_{yz} = \tau_{zx} = 0$$

V-5.4.2 In a <u>viscous incompressible fluid,</u> it is possible to demonstrate that the normal forces (σ) are the sum of the pressure force and a viscous force proportional to the coefficients of linear deformation:

$$\sigma_{xx} = -p + 2\mu \frac{\partial u}{\partial x}$$

$$\sigma_{yy} = -p + 2\mu \frac{\partial v}{\partial y}$$

$$\sigma_{zz} = -p + 2\mu \frac{\partial w}{\partial z}$$

The shearing stresses τ are functions of the coefficients of angular deformation:

$$\tau_{yz} = \mu \left(\frac{\partial w}{\partial y} + \frac{\partial v}{\partial z} \right)$$

$$\tau_{xz} = \mu \left(\frac{\partial u}{\partial z} + \frac{\partial w}{\partial x} \right)$$

$$\tau_{xy} = \mu \left(\frac{\partial v}{\partial x} + \frac{\partial u}{\partial y} \right)$$

Now, introducing these values in the sum of forces acting in the same direction, as for example in the OX direction,

$$\left(\frac{\partial \sigma_{xx}}{\partial x} + \frac{\partial \tau_{xy}}{\partial y} + \frac{\partial \tau_{xz}}{\partial z} \right)$$

it is easy to verify that the formulas obtained previously are found:

$$- \frac{\partial p}{\partial x} + \mu \nabla^2 u$$

V-5.4.3 In the case of a <u>viscous compressible fluid</u>, the shearing stresses are the same as in the above case, but the normal forces have to take into account the change of volume of the fluid particle. It may be seen that:

$$\sigma_{xx} = -p + \lambda \left(\frac{\partial u}{\partial x} + \frac{\partial v}{\partial y} + \frac{\partial w}{\partial z} \right) + 2\mu \frac{\partial u}{\partial x}$$

Two similar relationships are easily deduced for σ_{yy} and σ_{zz}.. λ is a second coefficient of viscosity for a gas. From the kinetic theory of gases, it may be shown that for a monatomic gas: $3\lambda + 2\mu = 0$. In practice this relationship is considered accurate enough for any kind of gas.

Now, introducing these values in the sum of forces acting in the OX direction yields:

$$\left(\frac{\partial \sigma_{xx}}{\partial x} + \frac{\partial \tau_{xy}}{\partial y} + \frac{\partial \tau_{xz}}{\partial z} \right) = - \frac{\partial p}{\partial x} + \mu \nabla^2 u + (\mu + \lambda) \frac{\partial}{\partial x} \operatorname{div} \vec{V}$$

Similar expressions are easily deduced for the two other directions, OY and OZ. These three expressions are vectorially written in a more concise manner as follows:

$$- \overrightarrow{\operatorname{grad}}\ p + \mu \nabla^2 V + (\mu + \lambda)\ \overrightarrow{\operatorname{grad}}\ \operatorname{div} \vec{V}$$

Since for an incompressible fluid $\operatorname{div} \vec{V} = 0$, the expression in V-5.4.2 may be verified.

V-5.5 DISSIPATION FUNCTION

The energy transformed into heat either by change of volume or by friction may be obtained by adding the work done by all the external forces. This is equal to the external forces times their displacement (V dt).

For instance, in the OX direction, the work of pressure forces is:

$$p\, dy\, dz\, u dt - \left(p + \frac{\partial p}{\partial x} dx\right) dy\, dz \left(u + \frac{\partial u}{\partial x} dx\right) dt$$

and by all the forces in the OX direction:

$$\sigma_{xx}\, dy\, dz\, u dt - \left(\sigma_{xx} + \frac{\partial \sigma_{xx}}{\partial x} dx\right) dy\, dz \left(u + \frac{\partial u}{\partial x} dx\right) dt$$

$$+ \tau_{xy}\, dy\, dz\, u dt - \left(\tau_{xy} + \frac{\partial \tau_{xy}}{\partial x} dx\right) dy\, dz \left(u + \frac{\partial u}{\partial x} dx\right) dt$$

$$+ \tau_{xz}\, dy\, dz\, u dt - \left(\tau_{xz} + \frac{\partial \tau_{xz}}{\partial x} dx\right) dy\, dz \left(u + \frac{\partial u}{\partial x} dx\right) dt$$

Finally, introducing the values of σ and τ, it is found that the total work per unit volume changed into heat, and per unit of time, is given by the so-called "dissipation function". It is a function of the linear and angular rates of deformation.

$$\Phi = \lambda (\operatorname{div} \vec{V})^2 + \mu \left[2\left(\frac{\partial u}{\partial x}\right)^2 + 2\left(\frac{\partial v}{\partial y}\right)^2 + 2\left(\frac{\partial w}{\partial z}\right)^2 + \left(\frac{\partial w}{\partial y} + \frac{\partial v}{\partial z}\right)^2 + \left(\frac{\partial u}{\partial z} + \frac{\partial w}{\partial x}\right)^2 + \left(\frac{\partial v}{\partial x} + \frac{\partial u}{\partial y}\right)^2 \right]$$

$\lambda\ (\mathrm{div}\ \vec{V})^2$ is equal to zero in an incompressible fluid.

This function can be used, for example, in the calculation of head loss of a viscous flow in a pipe, the damping of gravity waves, etc.

V-1 Demonstrate that the viscous forces acting on an element of fluid of volume unity can be expressed in terms of the rotation by the following expression:

$$-2\mu\left(\frac{\partial\zeta}{\partial y}-\frac{\partial\eta}{\partial z}\right)$$

and two other expressions obtained by permutation.

Answer:

$$-2\mu\left(\frac{\partial\xi}{\partial z}-\frac{\partial\zeta}{\partial x}\right)$$

$$-2\mu\left(\frac{\partial\eta}{\partial x}-\frac{\partial\xi}{\partial y}\right)$$

V-2 Demonstrate that in an irrotational flow of an incompressible fluid, the sum of the viscous forces is theoretically zero.

Answer:

$$\mu\nabla^2\vec{V} = \mu\nabla^2 \operatorname{grad}\phi = \mu \operatorname{grad}\nabla^2\phi \equiv 0 \text{ for continuity}$$

V-3 Calculate the viscous force acting on a cubic element of water of volume 10^{-3} ft^3 and located between $y = \frac{1}{10}$ ft and $y = \frac{2}{10}$ ft in a two-dimensional flow defined by the velocity components

$$u = 10^{-4} \frac{g}{\nu} (4 - y)\, y$$

$$v = 0$$

$$w = 0$$

Calculate the values of σ and τ acting on each side of this cube, and the rate of dissipation of energy in the cube. ($\nu = 1.076 \cdot 10^{-5}$ ft^2/sec)

V-4 Express $\mu \nabla^2 \vec{V}$ in a cylindrical system of coordinates.

<u>Answer:</u>

r-direction:

$$\mu \left[\frac{1}{r} \frac{\partial}{\partial r} \left(r \frac{\partial v_r}{\partial r}\right) + \frac{1}{r^2} \frac{\partial^2 v_r}{\partial \theta^2} + \frac{\partial^2 v_r}{\partial z^2} - \frac{v_r}{r^2} - \frac{2}{r^2} \frac{\partial v_\theta}{\partial \theta}\right]$$

θ-direction

$$\mu \left[\frac{1}{r} \frac{\partial}{\partial r} \left(r \frac{\partial v_\theta}{\partial r}\right) + \frac{1}{r^2} \frac{\partial^2 v_\theta}{\partial \theta^2} + \frac{\partial^2 v_\theta}{\partial z^2} - \frac{v_\theta}{r^2} + \frac{2}{r^2} \frac{\partial v_r}{\partial \theta}\right]$$

z-direction

$$\mu \left[\frac{1}{r} \frac{\partial}{\partial r} \left(r \frac{\partial v_z}{\partial r}\right) + \frac{1}{r^2} \frac{\partial^2 v_z}{\partial \theta^2} + \frac{\partial^2 v_z}{\partial z^2}\right]$$

V-5 Express the stresses σ and τ in a cylindrical system of coordinates for an incompressible fluid.

Answer:

$$\sigma_{rr} = 2\mu \frac{\partial v_r}{\partial r}, \quad \sigma_{\theta\theta} = 2\mu \left[\frac{1}{r}\frac{\partial v_\theta}{\partial \theta} + \frac{v_r}{r}\right]$$

$$\sigma_{zz} = 2\mu \frac{\partial v_z}{\partial z}$$

$$\tau_{r\theta} = \mu \left[r \frac{\partial}{\partial r}\left(\frac{v_\theta}{r}\right) + \frac{1}{r}\frac{\partial v_r}{\partial \theta}\right]$$

$$\tau_{rz} = \mu \left[\frac{\partial v_r}{\partial r} + \frac{\partial v_r}{\partial z}\right]$$

$$\tau_{\theta z} = \mu \left[\frac{\partial v_\theta}{\partial z} + \frac{1}{r}\frac{\partial v_z}{\partial \theta}\right]$$

CHAPTER VI

EQUATIONS OF EULER
NAVIER-STOKES EQUATIONS
STABILITY OF LAMINAR FLOW

VI-1 MAIN DIFFERENTIAL FORMS OF THE MOMENTUM EQUATION

The momentum equation is obtained by equating the applied forces to the inertia force for a unit of volume of the fluid. The physical meaning and the mathematical expressions of these forces have been developed in Chapters IV and V.

According to the assumed approximations on the phenomena to be studied, it is convenient to use the momentum equation written in different forms. These different forms will be developed in this chapter.

VI-1.1 PERFECT FLUID

VI-1.1.1 Euler's Equation

The first major approximation is to assume that the fluid is perfect. In this case the friction forces are zero and the applied forces consist of gravity and pressure, only.

The momentum equation is obtained directly from the expressions developed in Chapters IV and V, in the three axis system OX, OY, OZ, where OZ is assumed to be vertical.

Recall: $(p^* = p + \rho g z)$

Inertia forces = pressure and gravity forces

per unit of volume (See IV-1.1) — per unit of volume of fluid (See V-3.4)

$$\rho \frac{du}{dt} = - \frac{\partial p^*}{\partial x}$$

$$\rho \frac{dv}{dt} = - \frac{\partial p^*}{\partial y}$$

$$\rho \frac{dw}{dt} = - \frac{\partial p^*}{\partial z}$$

which are vectorially written:

$$\rho \frac{d\vec{V}}{dt} + \overrightarrow{\text{grad}}\, p^* = 0$$

Or, along the OX axis, developing the expression of $\frac{du}{dt}$ and p^*, the momentum equation takes the form: (See IV-4.1)

$$\rho \left(\overbrace{\underbrace{\frac{\partial u}{\partial t}}_{\text{Local Inertia}} + \underbrace{u\frac{\partial u}{\partial x} + v\frac{\partial u}{\partial y} + w\frac{\partial u}{\partial z}}_{\text{Convective Inertia}}}^{\text{Inertia forces}} \right) = \overbrace{- \underbrace{\frac{\partial}{\partial x}}_{\text{Pressure}} \underbrace{(p + \rho g z)}_{\text{Gravity}}}^{\text{Applied forces}}$$

Two similar equations may be written in the OY and OZ directions.

Such a system of equations associated with the continuity relationship $\frac{\partial u}{\partial x} + \frac{\partial v}{\partial y} + \frac{\partial w}{\partial z} = 0$ (See III-2.2.2) forms the basis of the largest part of hydrodynamics dealing with a perfect incompressible fluid. These equations are mathematically of the first order but are non-linear (more specifically quadratic) because of the convective inertia terms. This quadratic term is the cause of a number of difficulties

encountered in hydraulics.

VI-1.1.2 Lagrangian Equations

It has been explained in Chapter I that it is possible to study problems in hydraulics either in Eulerian coordinates or in Lagrangian coordinates. The Lagrangian method consists of following particles along their paths instead of dealing with particles at a given point. (See I-3.1.)

The momentum equation in a Lagrangian system of coordinates is used particularly to solve problems related to periodical gravity waves. Hence this equation is given here only for the purpose of recognition in reading literature on this subject. Its demonstration is not within the scope of this book.

Friction forces are not taken into account. Hence these equations may be obtained from the previous system of Eulerian equations by the classical operations

$$x - x_o = \int_{t_o}^{t} u \, dt$$

$$y - y_o = \int_{t_o}^{t} v \, dt$$

$$z - z_o = \int_{t_o}^{t} w \, dt$$

x_o, y_o, and z_o being the initial coordinates of the considered particle at a given time t_o and x, y, z the coordinates of the same particle at time t.

If X, Y, Z are the volume or body forces, i.e. gravity,

the Lagrangian equation along the OX axis is written:

$$\frac{1}{\rho}\frac{\partial p}{\partial x_o} = \left(X - \frac{\partial^2 x}{\partial t^2}\right)\frac{\partial x}{\partial x_o} + \left(Y - \frac{\partial^2 y}{\partial t^2}\right)\frac{\partial y}{\partial y_o} + \left(Z - \frac{\partial^2 z}{\partial t^2}\right)\frac{\partial z}{\partial z_o}$$

Two similar equations give the value of $\frac{\partial p}{\partial y_o}$ and $\frac{\partial p}{\partial z_o}$ by permutation of x_o, y_o, z_o.

VI-1.2 VISCOUS FLUID AND THE NAVIER-STOKES EQUATIONS

VI-1.2.1 If the friction forces are introduced in the Eulerian equations, the so-called Navier-Stokes equations are obtained (See V-4.1). Because of their importance, the Navier-Stokes equations are fully developed along the three coordinate axes:

$$\rho\left(\overbrace{\frac{\partial u}{\partial t}}^{\text{Local Inertia}} + \overbrace{u\frac{\partial u}{\partial x} + v\frac{\partial u}{\partial y} + w\frac{\partial u}{\partial z}}^{\text{Convective Inertia}}\right) = \overbrace{-\frac{\partial p}{\partial x}}^{\text{Pressure}} + \overbrace{\mu\left(\frac{\partial^2 u}{\partial x^2} + \frac{\partial^2 u}{\partial y^2} + \frac{\partial^2 u}{\partial z^2}\right)}^{\text{Friction}}$$

$$\rho\left(\frac{\partial v}{\partial t} + u\frac{\partial v}{\partial x} + v\frac{\partial v}{\partial y} + w\frac{\partial v}{\partial z}\right) = -\frac{\partial p}{\partial y} + \mu\left(\frac{\partial^2 v}{\partial x^2} + \frac{\partial^2 v}{\partial y^2} + \frac{\partial^2 v}{\partial z^2}\right)$$

$$\rho\left(\frac{\partial w}{\partial t} + u\frac{\partial w}{\partial x} + v\frac{\partial w}{\partial y} + w\frac{\partial w}{\partial y}\right) = -\frac{\partial(p + \rho g z)}{\partial z} + \mu\left(\frac{\partial^2 w}{\partial x^2} + \frac{\partial^2 w}{\partial y^2} + \frac{\partial^2 w}{\partial z^2}\right)$$

Inertia Forces — Applied Forces: Pressure, Gravity, Friction

The Navier-Stokes equations are the basis of most problems in fluid mechanics dealing with liquid. They are second order differential equations because of the friction terms, and quadratic because of the convective inertia terms.

VI-1.2.2 Tensorial Notation

These Navier-Stokes equations are written in a very concise

manner with the aid of tensorial notation. The tensorial writing is very frequently used because of its conciseness. A knowledge of tensorial calculus is not required to follow the system which is given here as a guide to further reading on this subject.

Use is made of two subscripts, i and j, which indicate when an operation is to be systematically repeated and which component of a vector quantity (such as $\vec{V}$) is being considered. When an index is repeated in a term, the considered quantity has to be summed over the possible components. For example, the continuity equation $\frac{\partial u}{\partial x} + \frac{\partial v}{\partial y} + \frac{\partial w}{\partial z} = 0$ is tensorially written: $\frac{\partial u_i}{\partial x_i} = 0$, since the subscript i indicates that the quantity (here $\vec{V}$) has to be summed over the three components OX, OY, OZ.

The three previous Navier-Stokes equations may be written simply as:

$$\rho \left[\frac{\partial u_i}{\partial t} + u_j \frac{\partial u_i}{\partial x_j} \right] = - \frac{\partial (p + \rho g z)}{\partial x_i} + \mu \frac{\partial^2 u_i}{\partial x_j \partial x_j}$$

Here, the subscript i is the so-called "free index" which indicates the component being considered, and the subscript j is the so-called "dummy index" which indicates repeated operations.

VI-1.2.3 These Navier-Stokes equations are often written in another way in order to emphasize the role of the rotational component of motion. It is sufficient in this case to use the expression of the inertia force demonstrated in Chapter VI, which yields: (See IV-4.3.)

$$\overbrace{\underbrace{\text{Local Inertia}}\quad \underbrace{\text{Convective Inertia}}_{\text{Caused by variation of Kinetic Energy}\quad\text{Caused by Rotation}}}^{\text{Inertial Forces}} = \underbrace{\text{Pressure Gravity Friction}}_{\text{Applied Forces}}$$

$$\rho\left[\frac{\partial u}{\partial t} + \frac{\partial}{\partial x}\frac{V^2}{2} + 2(w\eta - v\zeta)\right] = -\frac{\partial(p+\rho g z)}{\partial x} + \mu\nabla^2 u$$

$$\rho\left[\frac{\partial v}{\partial t} + \frac{\partial}{\partial y}\frac{V^2}{2} + 2(u\zeta - w\xi)\right] = -\frac{\partial(p+\rho g z)}{\partial y} + \mu\nabla^2 v$$

$$\rho\left[\frac{\partial w}{\partial t} + \frac{\partial}{\partial z}\frac{V^2}{2} + 2(v\xi - u\eta)\right] = -\frac{\partial(p+\rho g z)}{\partial z} + \mu\nabla^2 w$$

VI-1.2.4 Vectorial Notation

These three equations are easily written vectorially in a more concise manner as:

$$\overbrace{\underbrace{\text{Local Inertia}}\quad \underbrace{\text{Convective Inertia}}_{\text{Caused by variation of Kinetic Energy}\quad\text{Caused by Rotation}}}^{\text{Inertia Forces}} = \overbrace{\text{Pressure Gravity Friction}}^{\text{Applied Forces}}$$

$$\rho\left(\frac{\partial \vec{V}}{\partial t} + \overrightarrow{\text{grad}}\,\frac{V^2}{2} + (\overrightarrow{\text{curl}}\,\vec{V}) \times \vec{V}\right) = -\overrightarrow{\text{grad}}\,(p+\rho g z) + \mu\nabla^2\vec{V}$$

which may be transformed as

$$\overrightarrow{\text{grad}}\left(\rho\frac{V^2}{2} + p + \rho g z\right) = -\rho\frac{\partial\vec{V}}{\partial t} - \rho(\overrightarrow{\text{curl}}\,\vec{V}) \times \vec{V} + \mu\nabla^2\vec{V}$$

In the case of a steady $\left(\frac{\partial\vec{V}}{\partial t} = 0\right)$ irrotational flow $(\overrightarrow{\text{curl}}\,\vec{V} = 0)$ of a perfect fluid $(\mu = 0)$, the above equation gives at

once:

$$\overrightarrow{\text{grad}}\left(\rho \frac{V^2}{2} + p + \rho g z\right) = 0$$

or

$$\rho \frac{V^2}{2} + p + \rho g z = \text{const.}$$

which is the well-known Bernoulli equation, fully developed in Chapter X.

VI-1.2.5 The Case of Compressible Fluid

In the case of a compressible fluid, the applied forces must take account of the change of volume of the particle. The momentum equation along the OX axis for such a fluid is given here without further demonstration for the purpose of familiarity in reading.

$$\underset{\text{Inertia}}{\rho \frac{du}{dt}} = \underset{\text{Pressure}}{-\frac{\partial(p + \rho g z)}{\partial x}} + \underset{\text{Friction}}{\mu \nabla^2 u} + \underset{\text{Change of Volume}}{(\lambda + \mu)\frac{\partial}{\partial x} \operatorname{div} \vec{V}}$$

When the above expression is vectorially combined with expressions for $\rho \frac{du}{dt}$ and $\rho \frac{dv}{dt}$, one obtains:

$$\overrightarrow{\text{grad}}\left(\rho \frac{V^2}{2} + p + \rho g z - (\lambda + \mu) \operatorname{div} \vec{V}\right) = -\rho \frac{\partial \vec{V}}{\partial t} - \rho(\overrightarrow{\text{curl}}\, \vec{V}) \times \vec{V} + \mu \nabla^2 \vec{V}.$$

VI-1.3 THE GENERAL FORM OF THE MOMENTUM EQUATION

It has been shown that the applied forces may be expressed independent of their physical nature with the help of the tensor of rank two:

$$\begin{vmatrix} \sigma_{xx} & \tau_{xy} & \tau_{xz} \\ \tau_{xy} & \sigma_{yy} & \tau_{yz} \\ \tau_{xz} & \tau_{yz} & \sigma_{zz} \end{vmatrix}$$

The main advantage of such a notation is that it is valid for any kind of fluid -- perfect or real -- and any kind of motion -- laminar or turbulent. It will be shown that if in the momentum equation the real values u, v, w and p are replaced by the average values $\overline{u}$, $\overline{v}$, $\overline{w}$ and $\overline{p}$ in a turbulent flow, the surface forces σ and τ include additional forces caused by the turbulent fluctuations. (See VII-5.3.)

Hence, the advantage of using the notations σ and τ exists in expressing general equations which are independent of the nature of the flow. Equating the inertia forces to the applied forces expressed in the manner shown in Chapter V yields:

$$\overbrace{\rho \frac{du}{dt}}^{\text{Inertial Forces}} = \overbrace{\underbrace{X}_{\text{Volume Forces}} + \underbrace{\left(\frac{\partial \sigma_{xx}}{\partial x} + \frac{\partial \tau_{xy}}{\partial y} + \frac{\partial \tau_{xz}}{\partial z}\right)}_{\text{Surface Forces}}}^{\text{Applied Forces}}$$

$$\rho \frac{dv}{dt} = Y + \left(\frac{\partial \tau_{xy}}{\partial x} + \frac{\partial \sigma_{yy}}{\partial y} + \frac{\partial \tau_{yz}}{\partial z}\right)$$

$$\rho \frac{dw}{dt} = Z + \left(\frac{\partial \tau_{xz}}{\partial x} + \frac{\partial \tau_{yz}}{\partial y} + \frac{\partial \sigma_{zz}}{\partial z}\right)$$

In practice, if OZ is vertical upwards, $X = 0$, $Y = 0$, $Z = -\rho g = -\frac{\partial}{\partial z}(\rho g z)$.

VI-2 SYNTHESIS OF THE MOST USUAL APPROXIMATIONS

Tables VI-1 and VI-2 recall the physical meaning of different terms and the possible approximations.

According to different possible combinations of these approximations, all the cases presented in the following tables may be

TABLE VI-1

$$\rho \left[\frac{\partial \vec{V}}{\partial t} + \overrightarrow{\text{grad}} \frac{V^2}{2} + (\overrightarrow{\text{curl}}\, \vec{V}) \times \vec{V} \right] = -\overrightarrow{\text{grad}}\,(p + \rho g z) + \mu \nabla^2 \vec{V}$$

Physical Meaning	Local Inertia	Variation of Kinetic Energy with Space	Rotational Term	Pressure Force	Gravity Force	Friction Force
		Convective Inertia		Applied Forces		
Mathe-matical Charac-teristics	1st Order Linear Term	Non-Linear (Quadratic) Term		1st Order Linear Term	Constant Term	2nd Order Linear Term
Approximation	Steady Flow = 0		Irrotational Motion = 0 Solution given by a Harmonic Function		Gas = 0 (with exceptions)	Ideal Fluid = 0
		Slow Motion = 0	= 0			

TABLE VI-2

Local Inertia	Convective Inertia	Friction	Equations	Some Applications
Steady motion or motion considered as a succession of steady motions.	Slow Motion	Without Friction	$\overrightarrow{\text{grad}}\,(p + \rho g z) = 0$	Hydrostatics
		With Friction	$-\overrightarrow{\text{grad}}\,(p + \rho g z) + \mu \nabla^2 \vec{V} = 0$	Steady uniform flow Flow in a porous medium
	Irrotational Motion	Without Friction	$\overrightarrow{\text{grad}}\left(\rho \frac{V^2}{2} + p + \rho g z\right) = 0$	Non-uniform (convergent) Steady flow at a constant total energy. Calculation of pressure in a two-dimensional flow net.
	Rotational Motion	With Friction	$\overrightarrow{\text{grad}}\left(\rho \frac{V^2}{2} + p + \rho g z\right) = - \rho(\overrightarrow{\text{curl}}\,\vec{V}) + \vec{V} + \mu \nabla^2 \vec{V}$	General case of steady motion. Boundary layer (after some simplifications)
Unsteady Motion	Slow Motion	Without Friction	$\rho \frac{\partial \vec{V}}{\partial t} + \overrightarrow{\text{grad}}\,(p + \rho g z) = 0$	Gravity wave. (1st Order theory) Water hammer theory.
		With Friction	$\rho \frac{\partial \vec{V}}{\partial t} + \overrightarrow{\text{grad}}\,(p + \rho g z) - \mu \nabla^2 \vec{V} = 0$	Wave filter theory (mean motion)
	Irrotational Motion	Without Friction	$\rho \frac{\partial \vec{V}}{\partial t} + \overrightarrow{\text{grad}}\,(\rho \frac{V^2}{2} + p + \rho g z) = 0$	Shock wave theories
	Rotational Motion	Without Friction	$\text{grad}\,(\rho \frac{V^2}{2} + p + \rho g z) = - \rho \frac{\partial \vec{V}}{\partial t} - \rho\,(\overrightarrow{\text{curl}}\,\vec{V}) + \vec{V} = 0$	Gravity wave theory of Gerstner
		With Friction	General Case	Tidal wave in an estuary.

encountered in hydraulics. It is very often sufficient to neglect the gravity force ($\overrightarrow{\text{grad}}\, \rho g z$) and to consider ρ as a variable function of p to obtain the basic equations governing the motion of gases, as long as the divergence of $\vec{V}$ remains small.

It may be noticed that, in practice, the friction term $\mu \nabla^2 \vec{V}$ is often empirically simplified in order to be able to study more complex phenomena such as flow through a porous medium $(K\vec{V})$, or turbulent flow (KV^2). These two points are analyzed in Chapters VIII and IX.

VI-2.1 AN EXAMPLE OF AN EXACT SOLUTION OF NAVIER-STOKES EQUATIONS

VI-2.1.1 Difficulties of Integration

It is to be expected that a general solution of the system of differential equations given by the continuity and momentum principles does not exist. However, some exact solutions can be obtained if the boundary conditions are simple, even if the quadratic term of the convective inertia is not zero (i.e., in the case of a non-uniform flow). Some examples of this include flow between parallel plates (i.e. the Couette flow, the Poiseuille flow), flow due to a rotating disk, etc.

VI-2.1.2 Flow on a Sloped Plane

The very simple example of a two-dimensional steady uniform flow on an inclined plane of infinite dimensions is given here as an example (Figure VI-1). The Navier-Stokes equation given in VI-1.2.1 may be simplified as follows:

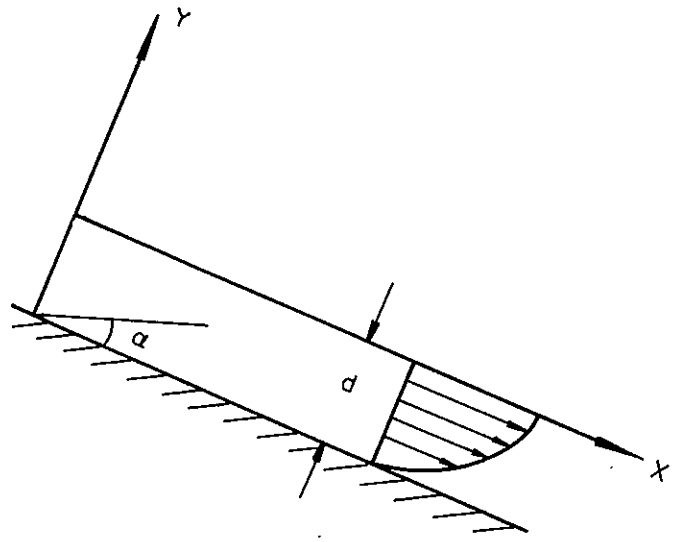

FIGURE VI-1
LAMINAR FLOW ON AN INCLINED PLANE

Since the motion is steady, $\frac{\partial u}{\partial t} = 0$ and $\frac{\partial v}{\partial t} = 0$. Since the motion is two-dimensional, $w = 0$, $\frac{\partial u}{\partial z} = 0$, $\frac{\partial^2 u}{\partial z^2} = 0$, etc. Since the motion is uniform and parallel to the axis OX :

$$v = 0 , \quad \frac{\partial v}{\partial x} = 0 , \quad \frac{\partial v}{\partial y} = 0 , \quad \mu \nabla^2 v = 0 , \text{ etc.}$$

$$\frac{\partial u}{\partial x} = 0 , \quad \frac{\partial^2 u}{\partial x^2} = 0 , \quad \frac{\partial p}{\partial x} = 0 , \text{ etc.}$$

The components of the gravitational force are $X = \rho g \sin \alpha$ and $Y = -\rho g \cos \alpha$. The continuity equation is reduced to $\frac{\partial u}{\partial x} = 0$ since $v = 0$, resulting from the fact that the flow is uniform.

The Navier-Stokes equations are reduced to:

$$\begin{cases} \rho g \sin \alpha + \mu \left(\frac{\partial^2 u}{\partial y^2} \right) = 0 \\ 0 = -\frac{\partial p}{\partial y} - \rho g \cos \alpha \end{cases}$$

The second equation points out that the pressure obeys a hydrostatic law: $p + \rho g y \cos \alpha = \text{constant}$. This constant may be, for example, the atmospheric pressure p_a such that:

$$p = p_a - \rho g y \cos \alpha$$

Hence the pressure is a constant along a parallel to the OX axis and equal to atmospheric pressure at the free surface.

The boundary conditions are $u = 0$ for $y = -d$ on the plane, and $\frac{du}{dy} = 0$ for $y = 0$ at the free surface.

The integration of

$$\frac{\partial^2 u}{\partial y^2} = -\frac{\rho g}{\mu} \sin \alpha$$

and taking into account the above boundary conditions, gives successively

$$\frac{\partial u}{\partial y} = -\frac{g \sin \alpha}{\nu} y \quad (\nu = \frac{\mu}{\rho})$$

and

$$u = \frac{g \sin \alpha}{2 \nu} (d^2 - y^2)$$

which is the equation of a parabola.

The discharge per unit of width

$$q = \int_o^d u \, dy = \frac{g \sin \alpha}{2 \nu} \int_o^d (d^2 - y^2) \, dy$$

$$q = \frac{g \sin \alpha}{3 \nu} d^3$$

In the case of a vertical plane, $\alpha = \frac{\pi}{2}$ and $q = \frac{g d^3}{3 \nu}$

The loss of energy per unit length may be given with the aid of the dissipation function Φ, which in this case is simply equal to

$\mu \left(\frac{\partial u}{\partial y}\right)^2$. Hence the loss of energy is

$$\int_o^d \Phi \, dy = \mu \int_o^d \left(\frac{\partial u}{\partial y}\right)^2 dy = \frac{(\rho g \sin \alpha)^2 d^3}{3\mu}$$

This can also be obtained by considering directly the work done by friction forces F_f

$$\int_o^d F_f \, du = \mu \int_o^d \frac{\partial u}{\partial y} du = \mu \int_o^d \left(\frac{\partial u}{\partial y}\right)^2 dy$$

VI-2.1.3 Numerical Treatments of the Navier-Stokes Equations

It is now possible, thanks to the development of high speed computers, to treat the Navier-Stokes equations directly by finite differences. This permits the study of complex flow motions beyond the usual limits of analytical solutions.

Among many possible methods which have been developed, one must mention the MAC (markers and cells) method for two-dimensional or axially symmetric incompressible fluid, and the PIC (particle in cell) method for two-dimensional compressible fluid.

In brief, these methods consist in solving time dependent flow motion at successive intervals of time from a given set of boundary conditions and the knowledge of the flow motion at time $T = 0$. The space intervals define a square mesh or a grid. Considering one (or two) particle(s) at the center of each of these squares at time $T = 0$, it is then possible to calculate the paths of these particles at successive intervals of time. The results are printed directly by the computer, and give a Lagrangian representation of the flow pattern as a function of time. It is also possible to obtain and print velocity vectors and pressure distributions (isobars) directly.

It is easily realized that this method is extremely powerful, as is evident from Figure VI-2. This figure represents the flow patterns which will be obtained by the sudden release of a vertical wall of water (this is the dam break problem) and hitting an obstacle. However, this method, as any numerical method, also has its limitation. The accuracy of the results is rapidly limited by the error which is made by replacing differential terms by finite difference. These are the truncation errors; a round-off error is also added, as will be explained in further detain in Section XV-4.3.

Any calculation also requires a preliminary analysis of stability conditions in order that the cumulative error does not blow out of proportion. This method is costly due to computing time. Nevertheless, it is to be expected that these kinds of methods will be used more and more for solving problems of increasing complexity.

VI-3 THE STABILITY OF LAMINAR FLOW

VI-3.1 THE NATURAL TENDENCY FOR FLUID FLOW TO BE UNSTABLE

Consider two layers of fluid moving with different velocities because of the effect of friction (Figure VI-3). If for any reason a small undulation exists between these two layers, the velocity of layer (2) decreases; hence, according to the Bernoulli equation, the pressure tends to increase.

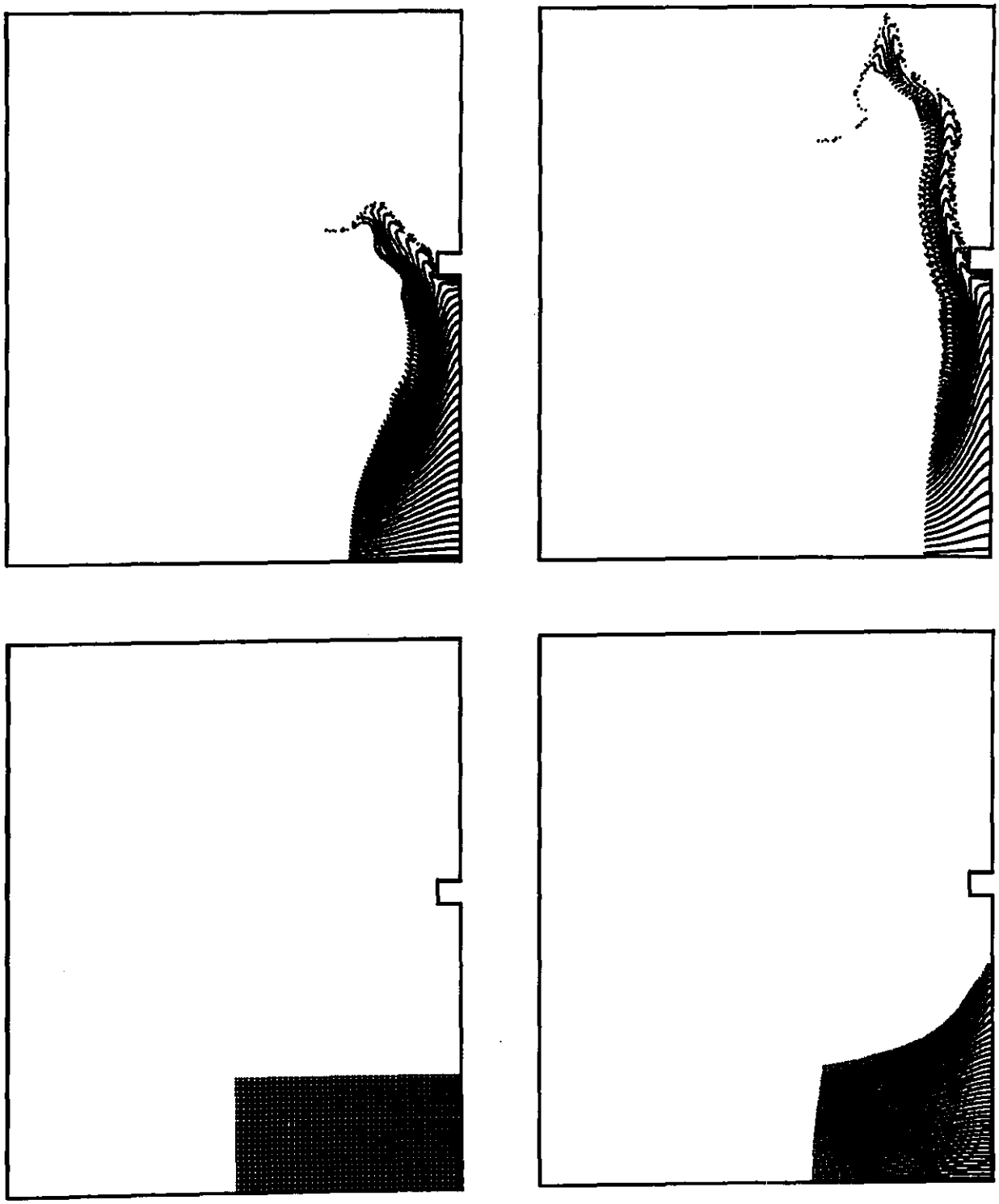

FIGURE VI-2
AN EXAMPLE OF AN APPLICATION OF NUMERICAL TREATMENT OF THE NAVIER-STOKES EQUATION
(Courtesy of Dr. F. Harlow of A.E.C.)

On the other hand, the velocity of layer (1) tends to increase; hence, the pressure tends to decrease. The pressure action being in the same direction as the inertial forces (by centrifugal action), the

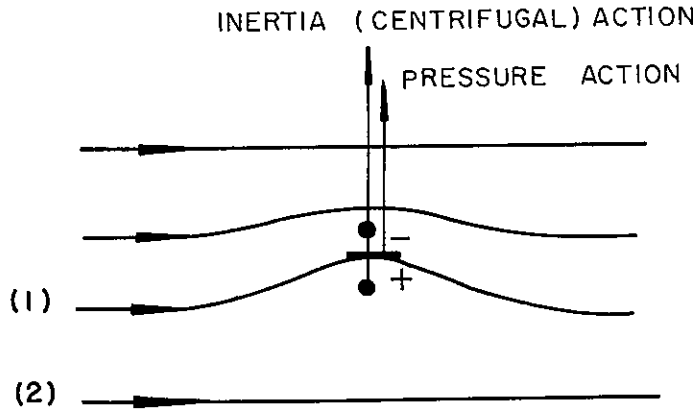

FIGURE VI-3
FLUID FLOW IS FUNDAMENTALLY UNSTABLE

undulation has a natural tendency to increase in amplitude. However, this increase in path length of the particles in motion causes an increase in friction effect, which in turn has a tendency to dampen such an undulation.

Hence, the stability of a laminar flow, without undulation or with stable undulations, depends upon the ratio of the gradient of the kinetic energy (dimensionally equal to the convective inertia forces) to the viscous forces. This ratio is dimensionally a function of the so-called Reynolds number ($R = VL/\nu$) which has to be defined empirically. V is a velocity, L is a characteristic length.

If instability conditions are satisfied, this primary, small undulation increases as shown by Figure VI-4.

VI-3.2 FREE TURBULENCE, EFFECTS OF WALL ROUGHNESS

Primary undulations are caused either by the mass of the fluid or by a boundary. In the first case the phenomenon is called "free turbulence". The balls of turbulence come initially from the zone where the gradient of kinetic energy is a maximum, as for example from the boundary of a circular jet in the same medium (Figure VI-5).

Primary undulations are most often caused by roughness of a fixed boundary. Indeed, any roughness causes a local increase of velocity which consequently produces a local strong gradient of kinetic energy, causing an instability (Figure VI-6).

This instability may exist even between two fluids of different density. For example, the wind blowing on a liquid causes ripples. These ripples are due to an instability between the air flow and water

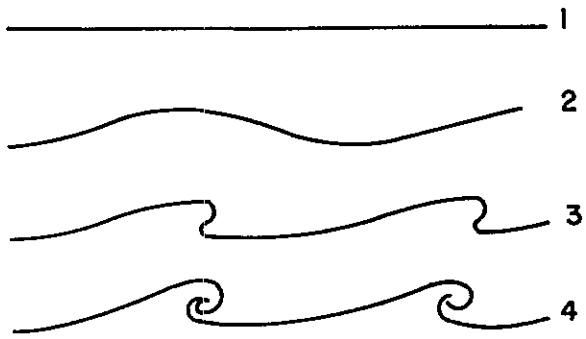

FIGURE VI-4
DEVELOPMENT OF
UNDULATIONS

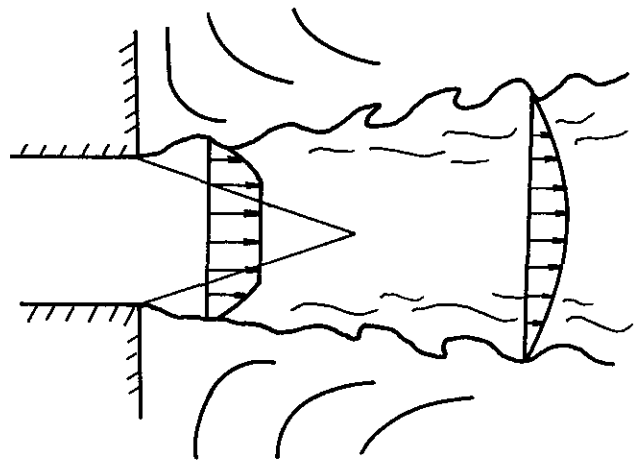

FIGURE VI-5
FREE TURBULENCE

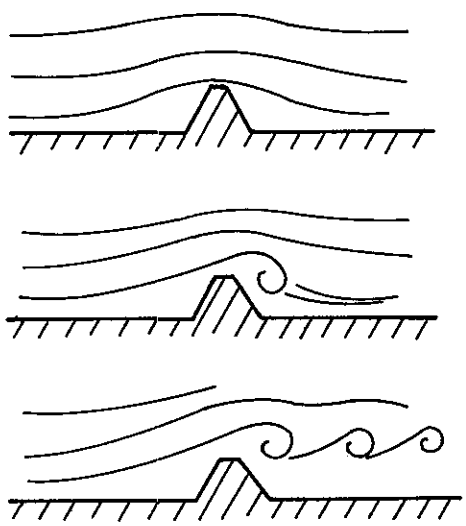

FIGURE VI-6
INSTABILITY OF A LAMINAR
FLOW BECAUSE OF A ROUGHNESS

flow caused by the friction of the wind on the free surface of the water. On the other hand, at sea the breaking phenomenon, either on a beach or white caps, is also a cause of turbulence in the same way that a hydraulic jump is a cause of turbulence in a steady flow. Both are particular cases of free turbulence.

VI-3.3 SOME THEORETICAL ASPECTS

Mathematically, the problem of the stability of a viscous flow is, in reality, the problem of the origin of turbulence.

Because of the definite instability of the flow, a disturbance caused by external forces (such as that created by a roughness at the boundary) grows exponentially if the disturbance is large enough. If the disturbance is small, the friction forces cause its damping. But if the ratio of the gradient of kinetic energy (dimensionally equal to a convective inertia force) to the viscous force is large enough, even an infinitely small disturbance is able to cause instability.

Hence, laminar flow is naturally and basically unstable at large Reynolds numbers. But even at low Reynolds numbers, laminar flow is unstable if the disturbance is large enough.

It is possible, with many precautions, to obtain a laminar flow in a very smooth pipe up to a Reynolds number of 40,000, although under normal conditions the critical value of Reynolds number for a pipe is 2,000.

A disturbance superimposed on the primary motion causes, as previously seen, a large local increase in the convective inertia forces.

This disturbance would tend to be dampened out by friction unless there is a transfer of energy (or a transfer of momentum by convective inertia forces) from the primary motion to this disturbance. Hence, in a turbulent motion, the rate of turbulence depends on the rate of energy which is transmitted from the primary flow to be finally absorbed entirely by friction.

The very interesting question concerning the origin of turbulence will not be studied in detail here. It is simply emphasized that the Navier-Stokes equations give unstable solutions which represent exact motions only at low Reynolds numbers, i.e. when the friction forces are large in comparison with the kinetic energy gradient.

These considerations lead to a further study of turbulence in Chapters VII and VIII.

VI-1 Consider successively a circular pipe and a square pipe rotating around their own axes at an angular velocity varying suddenly from $\omega = 0$ at time $t = 0$ to $\omega = \omega_1$ at time $t = \epsilon$ (ω_1 small) and $\omega = \omega_2$ at time $t = t_1$ (ω_2 large). These two pipes are successively half filled and fully filled with liquid. Describe qualitatively the liquid motion in the two cases where 1) the fluid is perfect, and 2) the fluid is viscous.

VI-2 Demonstrate that the velocity distribution for a flow between two parallel planes, one of them being fixed and the other one moving at a constant velocity U, is

$$u = \frac{U y}{e}$$

where e is the distance between the two planes.

VI-3 Write a Navier-Stokes equation for an unsteady flow between two parallel planes in which one of the planes is fixed while the other one is moving at a speed $u(t)$.

Then write the Navier-Stokes equation for a two-dimensional steady flow between two planes almost parallel; one plane is fixed, and the other plane is moving at constant velocity U. Do the simplifying

approximations that you think are permissible for analyzing the flow motion.

VI-4 Calculate the two-dimensional velocity distribution $u(y)$ between two parallel horizontal planes between which there are two layers of fluid of thickness e_1 and e_2, viscosity μ_1 and μ_2, and density ρ_1 and ρ_2 $(\rho_1 > \rho_2)$ respectively. One plane is fixed and the upper plane moves at constant velocity U.

Answer:

$$u(y) = U\left(1 + \frac{\mu_1}{\mu_2}\frac{e_1}{e_2}\right)^{-1}\frac{y}{e_1} \quad \text{when } y < e_1$$

and

$$u(y) = U\left\{1 - \left[1 - \left(1 + \frac{\mu_1}{\mu_2}\frac{e_2}{e_1}\right)^{-1}\right]\left[\frac{e_1 \quad e_2 - y}{e_2}\right]\right\} \quad \text{where } y > e_1$$

VI-5 Consider a two-dimensional flow between two parallel horizontal planes separated by a distance $2h$.

1) Write the continuity relationship, the Navier-Stokes equation, and the boundary condition. The flow motion will be assumed to be in the OX direction and OZ is perpendicular to the plane.

2) j being the head loss defined by

$$\frac{dp}{dx} = -\rho g j$$

calculate the velocity distribution $u = f(j, z)$ by two successive integrations, and the total discharge per unit of width $Q = f(j, h)$.

3) Calculate the mean velocity $\bar{u} = f(j, h)$ and express u as a function of $\bar{u}$, z, and e.

4) Calculate $\frac{d^2u}{dz^2}$ and $\frac{dp}{dx} = f(\bar{u}, h)$.

5) Calculate the rotational coefficients ξ, η, ζ as functions of j, z, h.

6) Calculate the loss of energy per unit length of the direction of the flow: $\rho g j Q = f(j, h)$ and the value of j as a function of Q and h.

7) Should an obstacle be inserted between the two planes, demonstrate that the mean motion with respect to the vertical OZ is irrotational, i.e., $\frac{\partial \bar{u}}{\partial y} - \frac{\partial \bar{v}}{\partial x} = 0$. (It is the Hele-Shaw analogy.) Express the potential function as a function of p, h and μ.

Answer:

1) $\frac{\partial u}{\partial x} = 0$, $v = w = 0$, $u = 0$ when $z = Ih$,

$$\frac{1}{\rho}\frac{\partial p}{\partial x} = \nu \frac{d^2u}{dz^2}$$

2) $u = \frac{\rho g j}{2\mu}(h^2 - z^2)$ $\qquad Q = \frac{2\rho g j}{3\mu} h^3$

3) $\bar{u} = \frac{\rho g j h^2}{3\mu}$ $\qquad \bar{u} = \frac{3u}{2h^2}(h^2 - z^2)$

4) $\frac{d^2 u}{dz^2} = -\frac{3u}{h^2}$ $\qquad \frac{dp}{dx} = -\frac{3\mu u}{h^2}$

5) $\xi = 0 \qquad \zeta = 0 \qquad \eta = \frac{1}{2}\left(\frac{\partial u}{\partial z}\right) = -\frac{\rho g j z}{2\mu}$

6) $\rho g j Q = \frac{2(\rho g)^2 j^2 h^3}{3\mu}$ $\qquad j = \frac{3\mu}{2\rho g h^3}$

7) $w = 0$

$$\frac{1}{\rho}\frac{\partial p}{\partial u} = \nu \nabla^2 u \cong \nu \frac{\partial^2 u}{\partial z^2}$$

$$\frac{1}{\rho}\frac{\partial p}{\partial y} = \nu \nabla^2 v \cong \nu \frac{\partial^2 u}{\partial z^2}$$

$$\frac{\partial p}{\partial x} = -\frac{3\mu\bar{u}}{h^2}, \qquad \frac{\partial p}{\partial y} = -\frac{3\mu\bar{v}}{h^2}$$

($\bar{v}$ = v average

$$\frac{\partial \bar{u}}{\partial x} + \frac{\partial \bar{v}}{\partial y} = 0$$

Since $\frac{\partial^2 p}{\partial x\, \partial y} \equiv \frac{\partial^2 p}{\partial y\, \partial x}$, one must have $\frac{\partial \bar{u}}{\partial y} - \frac{\partial \bar{v}}{\partial x} = 0$

$$\phi = -\frac{h^2 p}{3\mu}$$

VI-6 Calculate the ratio of inertial force to viscous forces in the case of a laminar steady uniform flow. Discuss the statement which consists of saying that the Reynolds number is a significant dimensionless parameter giving the relative importance of the inertial force to viscous force. Is the ratio of the gradient of kinetic energy to the viscous force a more significant definition?

VI-7 The following dimensionless quantities are defined:

$$x^* = \frac{x}{L}, \qquad y^* = \frac{y}{L}, \qquad z^* = \frac{z}{L}$$

$$t^* = \frac{t}{T}, \qquad V^* (u^*, v^*, w^*) = \frac{V (u, v, w)}{U}$$

$$p^* = \frac{p}{\rho U^2}, \qquad \vec{F}^* = \frac{\vec{F}}{g}$$

where L, T, U are an arbitrary typical length, time and velocity, and $\vec{F}$ is the gravity force. Then demonstrate that the Navier-Stokes equations can be written in dimensionless form as:

$$\left(\frac{L}{U T}\right) \frac{\partial u^*}{\partial t^*} + \frac{\partial}{\partial x^*} \left(p^* + \frac{1}{2} u^{*2}\right) + v^* \frac{\partial u^*}{\partial y^*} + w^* \frac{\partial u^*}{\partial z^*}$$

$$= \left(\frac{g L}{U^2}\right) \vec{F}^* + \left(\frac{\nu}{U L}\right) \nabla^2 u^*$$

and two other similar equations. Explain the physical significance of the parameters:

$\frac{UT}{L}$ (sometimes called reduced frequency)

$\frac{U^2}{gL}$ (Froude number)

$\frac{UL}{\nu}$ (Reynolds number)

VI-8 Demonstrate that in a flow defined by $v = w = 0$ and $u = f(y, z) = 0$, one has

$$\rho \frac{\partial \eta}{\partial t} = \mu \nabla^2 \eta$$

$$\rho \frac{\partial \zeta}{\partial t} = \mu \nabla^2 \zeta$$

VI-9 Demonstrate that $\frac{\partial \xi}{\partial x} + \frac{\partial \eta}{\partial y} + \frac{\partial \zeta}{\partial z} = 0$

VI-10 Demonstrate that the Navier-Stokes equation can still be written:

$$\rho \frac{d\xi}{dt} - \mu \nabla^2 \xi = \rho \left[\xi \frac{\partial u}{\partial x} + \eta \frac{\partial u}{\partial y} + \zeta \frac{\partial u}{\partial z}\right]$$

and two other equations obtained by circular permutation.

Answer:

$$\rho \frac{d\eta}{dt} - \mu \nabla^2 \eta = \rho \left[\xi \frac{\partial v}{\partial x} + \eta \frac{\partial v}{\partial y} + \zeta \frac{\partial v}{\partial z}\right]$$

$$\rho \frac{d\xi}{dt} - \mu \nabla^2 \xi = \rho \left[\xi \frac{\partial w}{\partial x} + \eta \frac{\partial w}{\partial y} + \zeta \frac{\partial w}{\partial z}\right]$$

CHAPTER VII

TURBULENCE - MEAN MOTION - MEAN FORCES - REYNOLDS EQUATION

VII-1 THE DEFINITION OF MEAN MOTION AND MEAN FORCES

VII-1.1 CHARACTERISTICS OF MEAN MOTION VERSUS ACTUAL MOTION

In the previous chapters, theory was sometimes illustrated by examples in which the motion was obviously turbulent, despite the fact that in the theory only an ideal fluid or a viscous laminar flow was dealt with. In a turbulent motion, velocity and pressure vary in a disorderly manner. In fact, in these examples, it was implied but not specified that only the average values of the velocity and the pressure were dealt with.

For example, a turbulent motion is always: unsteady - since at a given point the velocity changes continuously in a very irregular way; non-uniform - since the velocity changes from point to point at a given time; rotational - since the friction forces, proportional to $\nabla^2 \vec{V}$, are important. These characteristics are true as far as the actual motion is concerned. However, a turbulent motion may often be considered in practice as steady, uniform (in a pipe), or irrotational (over a weir). This is because only the average

motion is steady, uniform or irrotational, and the previously considered examples were relative to the average values.

Now this method has to be justified and the differences between the motion of an ideal fluid or a viscous flow, and a mean turbulent motion have to be further considered. This is the purpose of this chapter.

VII-1.2 VALIDITY OF THE NAVIER-STOKES EQUATION FOR TURBULENT MOTION

It is true that equalities between the inertia forces and the applied forces on an elementary fluid particle are valid even if the motion is turbulent. Hence, the basic Navier-Stokes equations and continuity relationships are also theoretically valid in the study of turbulent motion.

However, it is impossible to obtain an exact solution for such a complicated motion. It has been seen that it is sometimes possible to calculate a laminar solution where the boundary conditions are simple. Also, it is possible to know from theory whether a small disturbance will increase or be damped out by friction. However, theory is actually limited to these cases.

On the other hand, it is not necessary to know the exact fine structure of the flow in engineering practice. Only the average values and the over-all and statistical effects of turbulent fluctuations have to be studied. This is possible because of the random nature of these turbulent fluctuations.

Hence, the apparently complicated and disorderly motion has to be analyzed for the mean motion only. Although for some particular problems a study of the fluctuations is directly involved, it is usually sufficient to take only the statistical values into account.

VII-1.3 DEFINITIONS OF THE MEAN VALUES IN A TURBULENT FLOW

In a turbulent motion, as in the case of a viscous flow, velocity and pressure have to be known as functions of the space coordinates and time.

The instantaneous velocity $\vec{V}$ at a fixed point is the vectorial sum of the mean velocity $\overline{\vec{V}}$ with respect to time (referring to the basic primary movement) and the fluctuation velocity $\vec{V}'$ which varies rapidly with time both in intensity and direction. This can be expressed by the relationships $\vec{V} = \overline{\vec{V}} + \vec{V}'$ where, by definition,

$\overline{\vec{V}} = \frac{1}{T} \int_0^T \vec{V}\, dt$ and $\overline{\vec{V}'} = \frac{1}{T} \int_0^T \vec{V}'\, dt = 0$ where T is a time interval to be specified in the next section. Similarly, the instantaneous components of velocity are defined as follows:

real velocity		mean velocity		fluctuation velocity
u	=	$\bar{u}$	+	u'
v	=	$\bar{v}$	+	v'
w	=	$\bar{w}$	+	w'

and $\overline{u} = \frac{1}{T} \int_o^T u\, dt \quad \overline{u'} = \frac{1}{T} \int_o^T u'\, dt = 0$. Similar definitions exist for the $\overline{v}$ and $\overline{w}$ components. Also by definition, $\overline{u'} = \overline{v'} = \overline{w'} = 0$. Similarly, instantaneous pressure p is the scalar sum of the mean pressure $\overline{p}$ and a fluctuation term p' such that $p = \overline{p} + p'$ where

$$\overline{p} = \frac{1}{T} \int_o^T p\, dt \quad \overline{p'} = \frac{1}{T} \int_o^T p'\, dt = 0$$

Hence, turbulent motion may be considered as the superposition of a mean motion and a fluctuating and disorderly motion, random in nature, which obeys statistical laws.

VII-1.4 STEADY AND UNSTEADY MEAN TURBULENT FLOWS

It should be noted that the mean value is defined for intervals of time T, which is large compared to the time-scale of turbulent fluctuations but small compared to the time scale of the mean motion.

If, for example, one considers the oscillation of water in a tunnel (surge tank) where motion is turbulent, the instantaneous velocity at a fixed point varies quickly because of the turbulence. The average velocity defined for a relatively short interval of time varies also with respect to time, but its change is slow. It has the period of the oscillation. The real motion is always unsteady because of turbulence and in this case, the mean motion is also unsteady. (Fig. VII-1)

In the following discussion, a motion is called unsteady only

if the mean value of the velocity defined in relatively short intervals of time T varies during a longer interval of time. This short interval of time, which permits definition of the mean motion, is relative to the frequency of turbulent fluctuations. It is difficult to give an order of magnitude of T . It varies with the phenomenon to be studied. For example, it is long for the meteorologist who deals with atmospheric motion, and it is short for the aerodynamist who deals with the turbulence effects in the boundary layer along a wing.

VII-1.5 MEAN MOTION IN A PIPE

As an example of mean motion and fluctuating motion, a turbulent "uniform" flow in a pipe is defined as follows: (Fig. VII-2)

$$u,\ v,\ w \neq 0 \qquad\qquad u',\ v',\ w' \neq 0$$

$$\overline{v},\ \overline{w} = 0 \qquad \overline{u} \neq 0 \qquad \overline{u'},\ \overline{v'},\ \overline{w'} = 0$$

On the other hand, $\frac{\partial \overline{u}}{\partial x} = 0$ since the motion is uniform along the OX axis. However, $\frac{\partial \overline{u}}{\partial y}$, $\frac{\partial \overline{u}}{\partial z} \neq 0$ since the velocity distribution in the pipe is non-uniform.

All the derivatives of $\overline{v}$ and $\overline{w}$ are zero since $\overline{v}$ and $\overline{w}$ are constant and equal to zero.

All the derivatives of u', v', and w' are different from zero.

$$\frac{\partial u'}{\partial x},\quad \frac{\partial u'}{\partial y} \ldots \frac{\partial v'}{\partial x} \ldots \neq 0$$

but the mean values of those quantities are always zero. For example,

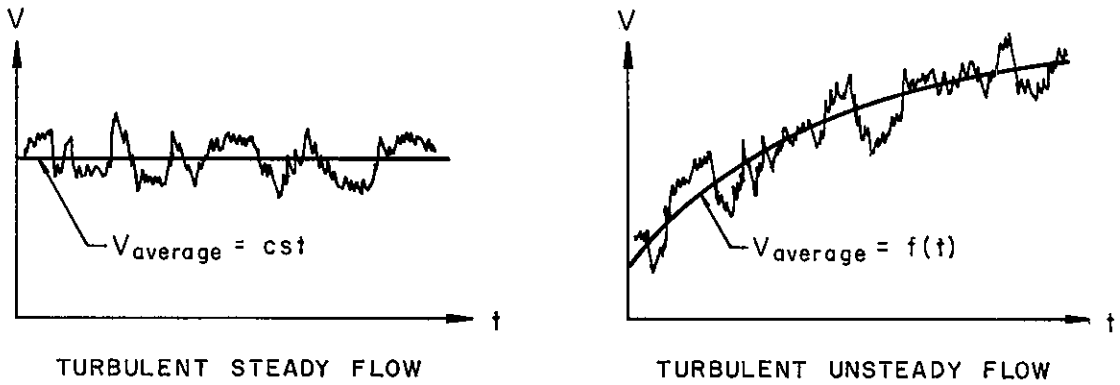

FIGURE VII-1
THE STEADINESS OF A TURBULENT FLOW IS DEFINED BY THE MEAN VELOCITY ONLY

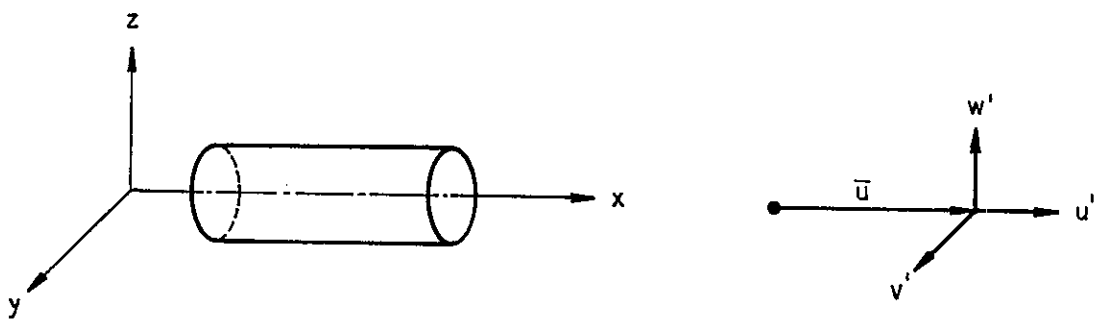

FIGURE VII-2
TURBULENT FLOW IN A PIPE

since $\overline{u'} = \frac{1}{T} \int_o^T u' \, dt = 0$ by definition,

$$\overline{\frac{\partial u'}{\partial x}} = \frac{1}{T} \int_o^T \frac{\partial u'}{\partial x} \, dt = \frac{\partial}{\partial x} \frac{1}{T} \int_o^T u' \, dt = \frac{\partial \overline{u'}}{\partial x} = 0$$

VII-1.6 MEAN FORCES

Since the real value of the inertia forces is always equal to the sum of the real values of the applied forces in any kind of motion (laminar or turbulent), the mean value of the inertia forces with respect to time is equal to the mean value of the applied forces with respect to time. This may be expressed as follows:

Since:

$$\begin{matrix}\text{Local} \\ \text{Inertia} \\ \text{Forces}\end{matrix} + \begin{matrix}\text{Convective} \\ \text{Inertia} \\ \text{Force}\end{matrix} + \begin{matrix}\text{Pressure} \\ \text{Force}\end{matrix} + \begin{matrix}\text{Gravity} \\ \text{Force}\end{matrix} + \begin{matrix}\text{Friction} \\ \text{Force}\end{matrix} = 0$$

it is always true that:

$$\begin{matrix}\text{Mean value} \\ \text{with respect} \\ \text{to time of}\end{matrix} \left[\begin{matrix}\text{Local} \\ \text{Inertia} \\ \text{Force}\end{matrix} + \begin{matrix}\text{Convective} \\ \text{Inertia} \\ \text{Force}\end{matrix} + \begin{matrix}\text{Gravity} \\ \text{Force}\end{matrix} + \begin{matrix}\text{Pressure} \\ \text{Force}\end{matrix} + \begin{matrix}\text{Friction} \\ \text{Force}\end{matrix} \right] = 0$$

This is expressed mathematically, along the OX axis, as: (see Chapter VI-1.2.1)

$$\frac{1}{T} \int_o^T \rho \left(\frac{\partial u}{\partial t} + u \frac{\partial u}{\partial x} + v \frac{\partial u}{\partial y} + w \frac{\partial u}{\partial z} \right) dt = \frac{1}{T} \int_o^T \left(- \frac{\partial (p + \rho g z)}{\partial x} + \mu \nabla^2 u \right) dt$$

or, using the σ and τ notations and the rotational coefficients η, ζ and ξ : (see Chapters VI-1.2.3 and VI-1.3)

$$\frac{1}{T}\int_0^T \rho\left(\frac{\partial u}{\partial t} + \frac{\partial}{\partial x}\frac{V^2}{2} + 2(w\eta - v\zeta)\right) dt =$$

$$+ \frac{1}{T}\int_0^T \left(-\frac{\partial}{\partial x}\rho g z + \frac{\partial}{\partial x}\sigma_{xx} + \frac{\partial}{\partial y}\tau_{xy} + \frac{\partial}{\partial z}\tau_{xz}\right) dt$$

and similar equations along the OY and OZ axes. Finally, using the vectorial notations:

$$\frac{1}{T}\int_0^T \rho\left(\frac{\partial \vec{V}}{\partial t} + \overrightarrow{\text{grad}}\,\frac{V^2}{2} + (\overrightarrow{\text{curl}}\,\vec{V}) \times \vec{V}\right) dt =$$

$$\frac{1}{T}\int_0^T \left(-\overrightarrow{\text{grad}}\,(p + \rho g z) + \mu\nabla^2\vec{V}\right) dt$$

Now each of these mean forces has to be expressed as a function of the mean values and fluctuating values of the velocity and the pressure. For this purpose, the different forces are distinguished as follows:

1. The constant forces: - Gravity force
2. The linear forces:
   - Pressure force, linear function of p
   - Local inertia force, linear function of $\vec{V}$
   - Friction force, linear function of $\vec{V}$
3. The quadratic force: - Convective inertia, function of the square of velocity V^2 or a product of two components of velocity: u^2, v^2, w^2, uv, uw, vw.

VII-2 CALCULATION OF THE MEAN FORCES

The mean forces are calculated as a function of the mean values of velocities and pressure. These calculations are fully developed for a better understanding. They are based on the fact that the order of mathematical operations has no effect on the final result. In particular, integration during an interval of time T and derivatives with respect to time or space could be interchanged.

VII-2.1 THE CONSTANT FORCE

The gravity force depends only on the density of the elementary particle. The fluctuations of pressure are too small to change this density (even in the case of a gas, where this force is still completely neglected). Hence, the gravity force does not depend on any kind of motion and is the same for laminar and turbulent motion.

The mean value of the gravity force is equal to this constant gravity force.

Mathematically this may be expressed successively as:

$$\overline{\rho g} = \frac{1}{T} \int_0^T \rho g \, dt = \rho g \frac{1}{T} \int_0^T dt = \rho g$$

since ρg is a constant with respect to time; also,

$$\overline{\frac{\partial}{\partial z} (\rho g z)} = \frac{1}{T} \int_0^T \frac{\partial}{\partial z} (\rho g z) \, dt = \frac{\partial}{\partial z} \frac{1}{T} \int_0^T \rho g z \, dt = \frac{\partial}{\partial z} (\rho g z)$$

since $\rho g z$ is constant with respect to time.

Similarly: $\overline{\vec{\text{grad}}\ (\rho g z)} = \vec{\text{grad}}\ (\rho g z)$.

The gravity forces are mathematically expressed in the same way for turbulent motion as for laminar motion.

VII-2.2 LINEAR FORCES

VII-2.2.1 Mean Local Inertia Force

The mean value of the local inertia force,

$$\rho \frac{\partial \vec{V}}{\partial t} \qquad \text{or} \qquad \left\{ \begin{array}{l} \rho \dfrac{\partial u}{\partial t} \\[2ex] \rho \dfrac{\partial v}{\partial t} \\[2ex] \rho \dfrac{\partial w}{\partial t} \end{array} \right.$$

may be obtained by considering any of its components; for example: $\rho \frac{\partial u}{\partial t}$. The mean value of the term $\rho \frac{\partial u}{\partial t}$ during an interval of time T is given by alternating the operation $\frac{\partial}{\partial t}$ with the operation $\frac{1}{T} \int_0^T$ as follows:

$$\overline{\rho \frac{\partial u}{\partial t}} = \frac{1}{T} \int_0^T \rho \frac{\partial u}{\partial t} dt = \rho \frac{\partial}{\partial t} \frac{1}{T} \int_0^T u\, dt$$

(It is understood that the symbol in $\frac{\partial}{\partial t}$ should be $\frac{\partial}{\partial T}$, see Section VII-1.4. This notation will be avoided for the sake of simplicity.) Introducing the average and fluctuating values $u = \bar{u} + u'$

$$\overline{\rho \frac{\partial u}{\partial t}} = \rho \frac{\partial}{\partial t} \frac{1}{T} \int_0^T (\bar{u} + u')\, dt = \rho \frac{\partial}{\partial t} \frac{1}{T} \int_0^T \bar{u}\, dt + \rho \frac{\partial}{\partial t} \frac{1}{T} \int_0^T u'\, dt$$

and the definitions of $\bar{u}$ and u':

$$\frac{1}{T}\int_0^T \bar{u}\,dt = \bar{u} \qquad\qquad \overline{u'} = \frac{1}{T}\int_0^T u'\,dt = 0$$

results in

$$\overline{\rho\,\frac{\partial u}{\partial t}} = \rho\,\frac{\partial \bar{u}}{\partial t} \quad \left(\text{or } \rho\,\frac{\partial \bar{u}}{\partial T}\right)$$

Hence, the mean value of the local inertia force with respect to time is equal to the inertia force caused by the change of value of the mean velocity alone. The local inertia force in laminar flow and in turbulent flow is mathematically expressed by the same type of function:

$$\rho\,\frac{\partial \vec{\bar{V}}}{\partial t} \qquad \text{or} \qquad \left\{ \begin{array}{l} \rho\,\dfrac{\partial \bar{u}}{\partial t} \\[2ex] \rho\,\dfrac{\partial \bar{v}}{\partial t} \\[2ex] \rho\,\dfrac{\partial w}{\partial t} \end{array} \right.$$

However, in the cases of laminar motion, $\vec{\bar{V}}(\bar{u}, \bar{v}, \bar{w})$ is rigorously equal to the actual value $V\,(u, v, w)$ of the velocity.

VII-2.2.2 <u>The Mean Pressure Force</u>

Similarly averaging the pressure forces:

$$-\,\vec{\text{grad}}\,p \qquad \text{or} \qquad \left\{ \begin{array}{l} -\,\dfrac{\partial p}{\partial x} \\[2ex] -\,\dfrac{\partial p}{\partial y} \\[2ex] -\,\dfrac{\partial p}{\partial z} \end{array} \right.$$

one obtains for the component $-\frac{\partial p}{\partial x}$ along the OX axis:

$$-\overline{\frac{\partial p}{\partial x}} = -\frac{1}{T}\int_o^T \frac{\partial p}{\partial x}\,dt = -\frac{\partial}{\partial x}\frac{1}{T}\int_o^T p\,dt = -\frac{\partial}{\partial x}\frac{1}{T}\int_o^T (\overline{p} + p')\,dt =$$

$$-\frac{\partial}{\partial x}\frac{1}{T}\int_o^T \overline{p}\,dt - \frac{\partial}{\partial x}\frac{1}{T}\int_o^T p'\,dt$$

Since, $\frac{1}{T}\int_o^T \overline{p}\,dt = \overline{p}$ and $\frac{1}{T}\int_o^T p'\,dt = 0$, one has $-\overline{\frac{\partial p}{\partial x}} = -\frac{\partial \overline{p}}{\partial x}$, similarly:

$$-\overline{\overrightarrow{\text{grad}}\ p} = -\frac{1}{T}\int_o^T \overrightarrow{\text{grad}}\ p\,dt = -\overrightarrow{\text{grad}}\ \frac{1}{T}\int_o^T p\,dt = -\overrightarrow{\text{grad}}\ \overline{p}$$

$$-\overline{\overrightarrow{\text{grad}}\ p} = -\overrightarrow{\text{grad}}\ \overline{p}$$

The mean pressure force is equal to the force due to the mean pressure alone, and is mathematically expressed in the same way as the actual motion.

VII-2.2.3 <u>Mean Viscous Force</u>

The viscous force

$$\mu\nabla^2\vec{V} \quad \text{or} \quad \begin{cases} \mu\nabla^2 u = \mu\left(\frac{\partial^2 u}{\partial x^2} + \frac{\partial^2 u}{\partial y^2} + \frac{\partial^2 u}{\partial z^2}\right) \\ \mu\nabla^2 v = \mu\left(\frac{\partial^2 v}{\partial x^2} + \frac{\partial^2 v}{\partial y^2} + \frac{\partial^2 v}{\partial z^2}\right) \\ \mu\nabla^2 w = \mu\left(\frac{\partial^2 w}{\partial x^2} + \frac{\partial^2 w}{\partial y^2} + \frac{\partial^2 w}{\partial z^2}\right) \end{cases}$$

has a mean value which may be calculated by considering, for example, one of the second order terms such as $\mu \frac{\partial^2 u}{\partial x^2}$. Averaging this term leads successively to:

$$\overline{\mu \frac{\partial^2 u}{\partial x^2}} = \frac{1}{T} \int_o^T \mu \frac{\partial^2 u}{\partial x^2} dt = \mu \frac{\partial^2}{\partial x^2} \frac{1}{T} \int_o^T u\, dt = \mu \frac{\partial^2 \overline{u}}{\partial x^2}$$

And more generally:

$$\overline{\mu \nabla^2 \vec{V}} = \mu \nabla^2 \frac{1}{T} \int_o^T \vec{V} dt = \mu \nabla^2 \overline{\vec{V}}$$

The mean viscous force is equal to the viscous force due to the mean velocity alone, and is mathematically expressed in the same way as the actual motion.

VII-2.2.4 Conclusion on the Linear Forces

All the linear forces involved in the mean motion are mathematically written in the same way for both mean turbulent flow and actual motion, turbulent or laminar. In viscous motion, the mean values $\overline{V}$ and $\overline{p}$ are rigorously equal to the actual instantaneous values V and p.

VII-2.3 THE QUADRATIC FORCES

The convective inertia forces are:

$$\rho \left(\overrightarrow{\text{grad}} \frac{V^2}{2} + (\overrightarrow{\text{curl}}\, \vec{V}) \times \vec{V} \right) \quad \text{or} \quad \rho u_j \frac{\partial u_i}{\partial x_j} \quad \text{or} \quad \begin{cases} \rho \left(u \frac{\partial u}{\partial x} + v \frac{\partial u}{\partial y} + w \frac{\partial u}{\partial z} \right) \\ \rho \left(u \frac{\partial v}{\partial x} + v \frac{\partial v}{\partial y} + w \frac{\partial v}{\partial z} \right) \\ \rho \left(u \frac{\partial w}{\partial x} + v \frac{\partial w}{\partial y} + w \frac{\partial w}{\partial z} \right) \end{cases}$$

All these terms are proportional to V^2 or to a product of the components of V : u^2, v^2, w^2, uv, uw, vw . A simple general demonstration would be the use of the tensorial notation $\rho u_j \frac{\partial u_i}{\partial x_j}$. However, to be more comprehensive, it is useful to reason on one of these ordinary terms such as $\rho u \frac{\partial u}{\partial x}$ and to generalize the obtained result.

Consider for example, the component $u = \overline{u} + u'$. Squaring u yields $u^2 = \overline{u}^2 + 2\,\overline{u}u' + u'^2$, and averaging u^2 leads successively to:

$$\overline{u^2} = \frac{1}{T}\int_0^T u^2\,dt = \frac{1}{T}\int_0^T (\overline{u}^2 + 2\,\overline{u}u' + u'^2)\,dt$$

Introducing the relationships:

$$\frac{1}{T}\int_0^T \overline{u}^2\,dt = \overline{u}^2$$ (since $\overline{u}$ is a constant in the interval of time T)

$$\frac{1}{T}\int_0^T 2\,\overline{u}u'\,dt = 2\,\overline{u}\,\frac{1}{T}\int_0^T u'\,dt = 0$$ $\left(\text{since } \frac{1}{T}\int_0^T u'dt = 0\right)$

$$\frac{1}{T}\int_0^T u'^2\,dt = \overline{u'^2}$$ (u' may be positive or negative but u'^2 is always positive and its mean value is different from zero.)

Similarly, consider a product:

$$uv = (\overline{u} + u')(\overline{v} + v') = \overline{u}\,\overline{v} + u'\overline{v} + v'\overline{u} + u'v'$$

It has for a mean value:

$$\overline{uv} = \overline{u}\,\overline{v} + \overline{u'v'}$$

since the mean values of $\overline{u}v'$ and $u'\overline{v}$ are zero.

Now, considering the mean value of any term of convective inertia, such as $\rho u \frac{\partial u}{\partial x}$, one has successively:

$$\rho \overline{u \frac{\partial u}{\partial x}} = \frac{1}{T} \int_0^T \rho u \frac{\partial u}{\partial x} dt = \frac{1}{T} \int_0^T \rho (\overline{u} + u') \frac{\partial}{\partial x} (\overline{u} + u') dt =$$

$$\frac{1}{T} \int_0^T \left(\overline{u} \frac{\partial \overline{u}}{\partial x} + \overline{u} \frac{\partial u'}{\partial x} + u' \frac{\partial \overline{u}}{\partial x} + u' \frac{\partial u'}{\partial x} \right) dt$$

and considering each of these terms independently gives:

$$\frac{1}{T} \int_0^T \overline{u} \frac{\partial \overline{u}}{\partial x} dt = \overline{u} \frac{\partial \overline{u}}{\partial x}$$ (since $\overline{u}$ and $\frac{\partial \overline{u}}{\partial x}$ are constant with respect to time)

$$\frac{1}{T} \int_0^T \overline{u} \frac{\partial u'}{\partial x} dt = \overline{u} \frac{1}{T} \frac{\partial}{\partial x} \int_0^T u' dt = 0 \quad \left(\text{since } \int_0^T u' dt = 0\right)$$

$$\frac{1}{T} \int_0^T u' \frac{\partial \overline{u}}{\partial x} dt = \frac{1}{T} \frac{\partial \overline{u}}{\partial x} \int_0^T u' dt = 0$$

$$\frac{1}{T} \int_0^T u' \frac{\partial u'}{\partial x} dt = \frac{1}{T} \frac{\partial}{\partial x} \int_0^T \frac{u'^2}{2} dt = \frac{\partial}{\partial x} \frac{\overline{u'^2}}{2} = \overline{u' \frac{\partial u'}{\partial x}} \neq 0$$

Introducing these values yields:

$$\rho \overline{u \frac{\partial u}{\partial x}} = \rho \left(\overline{u} \frac{\partial \overline{u}}{\partial x} + \overline{u' \frac{\partial u'}{\partial x}} \right)$$

and similarly, it is found that:

$$\rho \overline{u \frac{\partial v}{\partial x}} = \rho \left(\overline{u} \frac{\partial \overline{v}}{\partial x} + \overline{u' \frac{\partial v'}{\partial x}} \right)$$ and so on.

Hence, the mean value of a convective inertia force with respect to time is equal to the sum of the convective inertia caused by the mean velocity and the mean convective inertia caused by the turbulent fluctuations. As far as the mean value of the velocity alone is concerned, the convective inertia terms have the same mathematical form as for the case of a laminar motion.

VII-3 THE CONTINUITY RELATIONSHIP

In the simple case of an incompressible fluid, the continuity relationship is written: (see Chapter III-2.2.2)

$$\frac{\partial u}{\partial x} + \frac{\partial v}{\partial y} + \frac{\partial w}{\partial x} = 0$$

This relationship, expressed as a function of the mean components of velocity and turbulent fluctuations, becomes:

$$\frac{\partial}{\partial x}(u' + \overline{u}) + \frac{\partial}{\partial y}(\overline{v} + v') + \frac{\partial}{\partial z}(\overline{w} + w') = 0$$

or:

$$\frac{\partial \overline{u}}{\partial x} + \frac{\partial \overline{v}}{\partial y} + \frac{\partial \overline{w}}{\partial z} + \frac{\partial u'}{\partial x} + \frac{\partial v'}{\partial y} + \frac{\partial w'}{\partial z} = 0$$

The averaging process, applied to $\frac{\partial \overline{u}}{\partial x}$, for example, gives:

$$\overline{\frac{\partial \overline{u}}{\partial x}} = \frac{1}{T}\int_0^T \frac{\partial \overline{u}}{\partial x}\,dt = \frac{\partial}{\partial x}\,\frac{1}{T}\int_0^T \overline{u}\,dt = \frac{\partial \overline{u}}{\partial x}$$

and applied to $\frac{\partial u'}{\partial x}$ gives:

$$\overline{\frac{\partial u'}{\partial x}} = \frac{1}{T}\int_0^T \frac{\partial u'}{\partial x}\,dt = \frac{\partial}{\partial x}\,\frac{1}{T}\int_0^T u'\,dt = 0$$

and the continuity relationship for the mean motion becomes:

$$\frac{\partial \overline{u}}{\partial x} + \frac{\partial \overline{v}}{\partial y} + \frac{\partial \overline{w}}{\partial z} = 0$$

(Consequently: $\frac{\partial u'}{\partial x} + \frac{\partial v'}{\partial y} + \frac{\partial w'}{\partial z} = 0$)

The mathematical form of the continuity relationship is the same for the mean motion as for the actual motion.

VII-4 THE MAIN CHARACTERISTICS OF THE MEAN MOTION OF A TURBULENT FLOW

Insofar as the mean velocity and the mean pressure alone are concerned, the basic momentum equation and the continuity relationship have exactly the same mathematical form as the corresponding equations for the actual motion. However, other forces exist and have to be added. These new forces are caused by the convective inertia of the turbulent fluctuations. If these last "new" forces may be neglected, or as long as only the forces which are functions of the mean velocity and mean pressure are dealt with, the solutions of problems concerning turbulent motion have the same mathematical form as the solutions given by the Navier-Stokes equations. For example, a mean motion which is steady and irrotational and for which the viscous forces $\mu\nabla^2 \overline{V}$ are neglected obeys the well known Bernoulli equation:

$$\rho \frac{\overline{V}^2}{2} + \overline{p} + \rho g z = \text{constant}$$

However, the velocity $\overline{V}$ and the pressure $\overline{p}$ are the average values. The assumptions used in applying this equation must be relative to the mean motion; i.e., the mean motion must be steady, irrotational and without viscous friction (despite the fact that the actual motion is always in fact unsteady, rotational and with friction).

Hence, it is now justified that examples of turbulent motion were cited in the previous chapters to illustrate our considerations on irrotational motion despite turbulence.

In practice the fluctuations of pressure p' are very small by comparison with the real pressure p, such that $p \doteq \overline{p}$. On the other hand, the viscous forces $\mu \nabla^2 \overline{V}$ caused by the mean motion are generally small in comparison with the other forces, in particular with the convective inertia forces caused by the turbulent fluctuations. The viscous forces can often be neglected except, for example, in a laminar boundary layer.

Now the effects of the convective fluctuating forces on the mean motion have to be studied. Then a relationship between the value of the mean velocity and the fluctuating velocity has to be established. Since another unknown $\vec{V}'$ (u', v', w') has been added, another relationship is necessary in order to solve problems in hydraulics. These studies will be the purpose of the next chapter.

VII-5 REYNOLDS EQUATIONS

Now applied forces and inertia forces for a turbulent flow are equated in the form of the so-called Reynolds equations.

VII-5.1 PURPOSE OF THE REYNOLDS EQUATIONS

Expressing each force in the Navier-Stokes equation as a function of the mean values $\vec{\overline{V}}(\overline{u}, \overline{v}, \overline{w})$ and the fluctuating values $\vec{V}(u', v', w')$ and averaging, leads to the Reynolds equation. The Reynolds equation is the form of the Newton or momentum equation for turbulent motion.

Since each of the mean forces has been calculated in the previous sections, it is possible to obtain directly the Reynolds equations by equating the sum of the obtained expressions to zero. It is recalled that each force has the same mathematical form as in the Navier-Stokes equation expressed as a function of the mean values of velocity or pressure. However, additional convective inertia forces exist, caused by the fluctuating terms. For example, the mean value of the quadratic inertia term $\rho u \frac{\partial u}{\partial x}$ is $\rho \overline{u \frac{\partial u}{\partial x}} = \rho \overline{u} \frac{\partial \overline{u}}{\partial x} + \rho \overline{u' \frac{\partial u'}{\partial x}}$. Hence, the momentum equation valid for the average motion may be written directly:

$$\rho \left(\underbrace{\frac{\partial \overline{u}}{\partial t}}_{\text{local inertia}} + \underbrace{\overline{u} \frac{\partial \overline{u}}{\partial x} + \overline{v} \frac{\partial \overline{u}}{\partial y} + \overline{w} \frac{\partial \overline{u}}{\partial z}}_{\text{convective inertia caused by the mean velocities}} + \underbrace{\overline{u' \frac{\partial u'}{\partial x}} + \overline{v' \frac{\partial u'}{\partial y}} + \overline{w' \frac{\partial u'}{\partial z}}}_{\text{convective inertia caused by the fluctuated velocities}} \right) =$$

$$\underbrace{\frac{\partial}{\partial x} (\overline{p} + \rho g z)}_{\text{pressure gravity}} + \underbrace{\mu \nabla^2 \overline{u}}_{\text{viscous force}}$$

(Since the calculation method is identical in the OY and OZ directions, only the momentum equation along the OX axis is studied.)

VII-5.2 REYNOLDS STRESSES

As far as the mean motion is concerned, the convective inertia forces caused by the fluctuating velocity components may be considered as external forces, similar to the pressure or viscous forces. Hence, it is necessary to transform the above equation in order to emphasize such a method of study of the turbulence effects.

Considering the convective inertia caused by the fluctuating velocity components as given in Chapter VII-5.1:

$$\rho \left(\overline{u' \frac{\partial u'}{\partial x}} + \overline{v' \frac{\partial u'}{\partial y}} + \overline{w' \frac{\partial u'}{\partial z}} \right)$$

and adding the zero value:

$$\overline{\rho u' \left(\frac{\partial u'}{\partial x} + \frac{\partial v'}{\partial y} + \frac{\partial w'}{\partial z} \right)}$$

from the continuity relationship as it has been demonstrated in paragraph VII-3, yields the following expression where terms are grouped in pairs:

$$\rho \left(\overline{u' \frac{\partial u'}{\partial x}} + \overline{u' \frac{\partial u'}{\partial x}} + \overline{v' \frac{\partial u'}{\partial y}} + \overline{u' \frac{\partial v'}{\partial y}} + \overline{w' \frac{\partial u'}{\partial z}} + \overline{u' \frac{\partial w'}{\partial z}} \right)$$

which becomes:

$$\rho \left(\frac{\partial \overline{u'^2}}{\partial x} + \frac{\partial \overline{u'v'}}{\partial y} + \frac{\partial \overline{u'w'}}{\partial z} \right)$$

Now, by introducing these terms (and two similar terms obtained for the OY and OZ directions) into the general momentum equation, the so-called Reynolds equations are obtained:

$$\rho\left(\frac{\partial\bar{u}}{\partial t}+\bar{u}\frac{\partial\bar{u}}{\partial x}+\bar{v}\frac{\partial\bar{u}}{\partial y}+\bar{w}\frac{\partial\bar{u}}{\partial z}\right)=-\frac{\partial}{\partial x}(\bar{p}+\rho gz)+\mu\nabla^2\bar{u}-\rho\left(\frac{\partial\overline{u'^2}}{\partial x}+\frac{\partial\overline{u'v'}}{\partial y}+\frac{\partial\overline{u'w'}}{\partial z}\right)$$

$$\rho\left(\frac{\partial\bar{v}}{\partial t}+\bar{u}\frac{\partial\bar{v}}{\partial x}+\bar{v}\frac{\partial\bar{v}}{\partial y}+\bar{w}\frac{\partial\bar{v}}{\partial z}\right)=-\frac{\partial}{\partial y}(\bar{p}+\rho gz)+\mu\nabla^2\bar{v}-\rho\left(\frac{\partial\overline{u'v'}}{\partial x}+\frac{\partial\overline{v'^2}}{\partial y}+\frac{\partial\overline{v'w'}}{\partial z}\right)$$

$$\rho\left(\frac{\partial\bar{w}}{\partial t}+\bar{u}\frac{\partial\bar{w}}{\partial x}+\bar{v}\frac{\partial\bar{w}}{\partial y}+\bar{w}\frac{\partial\bar{w}}{\partial z}\right)=-\frac{\partial}{\partial z}(\bar{p}+\rho gz)+\mu\nabla^2\bar{w}-\rho\left(\frac{\partial\overline{u'w'}}{\partial x}+\frac{\partial\overline{v'w'}}{\partial y}+\frac{\partial\overline{w'^2}}{\partial z}\right)$$

inertia — convective inertia — pressure + gravity forces — viscous forces — turbulent fluctuation forces

It is noticed that these Reynolds equations are very similar to the Navier-Stokes equations as has been shown previously. The difference is in the convective inertia forces caused by the turbulent fluctuations and in the fact that the other forces are expressed as functions of the mean value of the velocity or pressure.

The turbulent fluctuation forces, so-called "Reynolds stresses", may be defined by a tensor of rank to where the normal stresses are $\overline{\rho u_i'^2}$ and the shearing stresses are $\rho\overline{u_i' u_j'}$ $(i \neq j)$.

VII-5.3 VALUE OF THE LAMÉ COMPONENTS IN A TURBULENT MOTION

The applied forces are expressed independently of their physical nature, as is shown in Chapter VI-1.3, in order to study the physical

effects of the turbulent fluctuation force. It is recalled, for example, that the applied forces along the OX axis are expressed by X for the body force and the components σ and τ of a tensor of rank two for the external forces, as follows:

$$X + \left(\frac{\partial \sigma_{xx}}{\partial x} + \frac{\partial \tau_{xy}}{\partial y} + \frac{\partial \tau_{xz}}{\partial z} \right)$$

The mean value of the fluctuation terms such as σ'_{xx}, for example, is equal to zero by definition:

$$\frac{1}{T} \int_0^T \frac{\partial}{\partial x} \sigma'_{xx} \, dt = 0$$

Hence, the averaging process applied to these terms (which are either constant, such as X, or linear) gives for the applied forces:

$$\frac{1}{T} \int_0^T X + \left(\frac{\partial}{\partial x} \sigma_{xx} + \frac{\partial}{\partial y} \tau_{xy} + \frac{\partial}{\partial z} \tau_{xz} \right) dt =$$

$$X + \frac{\partial}{\partial x} \overline{\sigma}_{xx} + \frac{\partial}{\partial y} \overline{\tau}_{xy} + \frac{\partial}{\partial z} \overline{\tau}_{xz}$$

Introducing this above expression in the Reynolds equation instead of their factual values (that is the pressure, gravity, viscous terms) leads to:

$$\rho \frac{d\overline{u}}{dt} = X + \left(\frac{\partial}{\partial x} \overline{\sigma}_{xx} + \frac{\partial}{\partial y} \overline{\tau}_{xy} + \frac{\partial}{\partial z} \overline{\tau}_{xz} \right) -$$

$$\rho \left(\frac{\partial \overline{u'^2}}{\partial x} + \frac{\partial \overline{u'v'}}{\partial y} + \frac{\partial \overline{u'w'}}{\partial z} \right)$$

which may be written:

$$\rho \frac{d\bar{u}}{dt} = X + \frac{\partial}{\partial x}\left(\bar{\sigma}_{xx} - \rho\overline{u'^2}\right) + \frac{\partial}{\partial y}\left(\bar{\tau}_{xy} - \rho\overline{u'v'}\right) + \frac{\partial}{\partial z}\left(\bar{\tau}_{xz} - \rho\overline{u'w'}\right)$$

From this equation it is easily deduced that the fluctuation terms may be considered as external forces which are added to the other forces defined by normal forces $\bar{\sigma}$ and shear stresses $\bar{\tau}$. Hence, these new external forces to be dealt with are:

Normal force: $$\left[\sigma_{xx}\right]' = \bar{\sigma}_{xx} - \rho\overline{u'^2} = -\bar{p} + 2\mu\frac{\partial\bar{u}}{\partial x} - \rho\overline{u'^2}$$

Shear stress: $$\left[\tau_{xy}\right] = \bar{\tau}_{xy} - \rho\overline{u'v'} = +\mu\left(\frac{\partial\bar{u}}{\partial y} + \frac{\partial\bar{v}}{\partial x}\right) - \rho\overline{u'v'}$$

and so on. These new total external forces may also be defined by a tensor of rank two similar to the first tensor defined in Chapter V-5.3.

VII-5.4 USUAL APPROXIMATION

In practice the viscous forces caused by the mean velocity are very often negligible in turbulent flow in comparison with the other forces, and particularly in comparison with the shear stresses caused by the fluctuation terms $\rho\overline{u'v'}$, $\rho\overline{u'w'}$, and $\rho\overline{v'w'}$. However, both viscous and turbulent shear stresses are involved in a phenomenon where the boundary layer effects have to be analyzed.

VII-5.5 CORRELATION COEFFICIENTS & ISOTROPIC TURBULENCE

By definition, in isotropic turbulence the mean value of any function of the fluctuating velocity components and their space derivatives

is unaltered by a change in the axes of reference. In particular:

$$\overline{u'^2} = \overline{v'^2} = \overline{w'^2} \; ; \qquad \overline{u'v'} = \overline{u'w'} = \overline{v'w'} = 0 \; .$$

It is evident that isotropy introduces a great simplification in the calculations. However, this assumption is usually valid locally only. Because of the boundary, the turbulence is not isotropic and the products $\overline{u'v'}$, $\overline{u'w'}$ and $\overline{v'w'}$ may differ from each other. There exists a correlation between u' and v', u' and w', and v' and w', defined by the coefficients:

$$\frac{\overline{u'v'}}{\sqrt{\overline{u'^2}\,\overline{v'^2}}} \qquad \frac{\overline{u'w'}}{\sqrt{\overline{u'^2}\,\overline{w'^2}}} \qquad \frac{\overline{v'w'}}{\sqrt{\overline{v'^2}\,\overline{w'^2}}}$$

These coefficients are equal to zero in the case of isotropic turbulence. Since the convective inertia forces caused by the fluctuation terms are functions of $\overline{u'^2}$, $\overline{v'^2}$, $\overline{w'^2}$, $\overline{u'v'}$, $\overline{u'w'}$, $\overline{v'w'}$, they may be expressed directly as functions of the coefficients of correlation which are dimensionless.

VII-1 Express $\overline{\overrightarrow{\text{grad}}\,\frac{V^2}{2}}$ and $\overline{\vec{V} \times \overrightarrow{\text{curl}}\,\vec{V}}$ in terms of u, u′, v, v′, w, w′ for a turbulent flow.

VII-2 Express the average ratio of dilatational and shear deformation in terms of mean and fluctuating velocity components for a turbulent flow.

VII-3 Draw a line u(t) at random on graph paper and determine $\bar{u}$ and $\left[\overline{u'^2}\right]^{\frac{1}{2}}$. On the same graph, draw another line v(t) at random and determine $\bar{v}$ and $\left[\overline{v'^2}\right]^{\frac{1}{2}}$ and the value of the correlation coefficient

$$\frac{\overline{u'v'}}{\left[\overline{u'^2}\;\overline{v'^2}\right]^{\frac{1}{2}}}$$

VII-4 Demonstrate that the Reynolds equations can still be written:

$$\frac{\partial \bar{u}}{\partial t} + \bar{u}\frac{\partial \bar{u}}{\partial x} + \bar{v}\frac{\partial \bar{u}}{\partial y} + \bar{w}\frac{\partial \bar{u}}{\partial z} = \frac{\partial}{\partial x}\left[\frac{p}{\rho} + \nu\frac{\partial \bar{u}}{\partial x} - \overline{u'^2}\right]$$

$$+ \frac{\partial}{\partial y}\left[\nu\left(\frac{\partial \bar{u}}{\partial y} + \frac{\partial \bar{v}}{\partial x}\right) - \overline{u'v'}\right] + \frac{\partial}{\partial z}\left[\nu\left(\frac{\partial \bar{u}}{\partial z} + \frac{\partial \bar{w}}{\partial x}\right) - \overline{u'w'}\right]$$

and two other equations which will be determined. Indicate the advantage of this form of the Reynolds equation.

VII-5 Write the Reynolds equation in the case of a mean two-dimensional motion. Write the Reynolds equation in the case of isotropic turbulence $[\overline{u'^2} = \overline{v'^2}, \ \overline{uv} = 0]$.

VII-6 Write the Reynolds equation for a flow in a straight circular pipe and demonstrate that the pressure is smaller on the axis of the pipe than on the wall.

VII-7 Determine the expression of the dissipation function due to turbulent fluctuation as a function of $\frac{\partial u'}{\partial y}$ only, in the case of isotropic turbulence.

CHAPTER VIII

TURBULENCE - EFFECTS - MODERN THEORIES

VIII-1 SOME PHYSICAL EFFECTS OF TURBULENT FLUCTUATIONS

The following considerations are purely qualitative. Some of them will be quantitatively analyzed in later sections.

VIII-1.1 VELOCITY DISTRIBUTION

The velocity distribution depends upon the shearing stresses. That is, it depends upon viscous force terms and turbulent fluctuation terms such as $\rho\overline{u'v'}$, $\rho\overline{u'w'}$, $\rho\overline{v'w'}$.

The effects of viscous forces without turbulent fluctuation stresses have previously been analyzed for a particular case (see VI-2.1.2). The obtained velocity distribution is in the form of a parabola in the case of a laminar flow on a sloped plane.

The effects of the turbulent fluctuations on the velocity distribution are analyzed qualitatively by considering the following mechanical analogy.

VIII-1.1.1 An Analogy with Elementary Mechanics

Consider two warships moving in the same direction at different velocities V_1 and V_2. V_1 is assumed to be greater than V_2. If a mass M (bullets) is sent at relative speed V' from ship (1)

to ship (2), the absolute value of the velocity of the bullets is $\vec{V} = \vec{V}_1 + \vec{V}'$. Because of the component V', a momentum is transmitted to ship (2), and since V_1 is also greater than V_2, this momentum tends to accelerate the motion of ship (2). (Fig. VIII-1)

Similarly, a bullet coming from ship (2) to ship (1) tends to slow down the speed of ship (1). In a word, because of the interchange of momentum between these two ships, their velocities tend to become equal.

The "shearing stress", which is really a force in this particular case, between these two ships is equal to the momentum transfered per unit of time: $F = \frac{d(MV)}{dT}$; that is, $\tau = MV'(V_1 - V_2)$ where M is the mass of bullets fired per second. This expression may be compared to a term such as $\rho u'v'$ where ρ replaces M, v' replaces V', and u' replaces $(V_1 - V_2)$.

VIII-1.1.2 Effect of Shearing Stresses on Velocity Distribution

Consider two fluid layers defined by the mean motion, i.e. separated by streamlines tangential to the vector "mean velocity". (Fig. VIII-2) Let $\overline{\vec{V}}_1$ and $\overline{\vec{V}}_2$ be the mean velocities of these two layers in a given cross section. The instantaneous velocity $\vec{V}_1$ is the sum of the mean velocity $\overline{\vec{V}}_1$ and a fluctuating term $\vec{V}_1'$: $\vec{V}_1 = \overline{\vec{V}}_1 + \vec{V}_1'$. $\vec{V}_1'$ has two components: v_1', normal to the mean velocity, and v_2' in the $\vec{V}_1$ direction.

Because of the normal component v_1', an amount of fluid moving in the $\overline{\vec{V}}_1$ direction at the mean velocity $\overline{\vec{V}}_1$ penetrates from layer (1) into layer (2), and since its mean velocity $\overline{\vec{V}}_1$ is smaller than

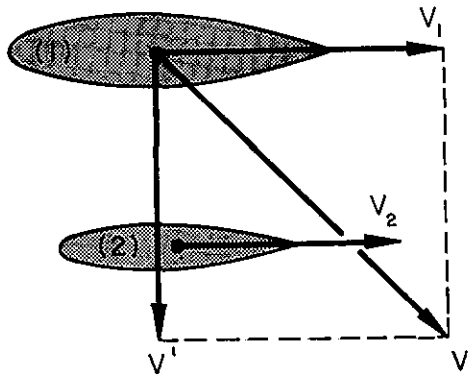

FIGURE VIII-1
CHANGE OF MOMENTUM BETWEEN TWO WARSHIPS

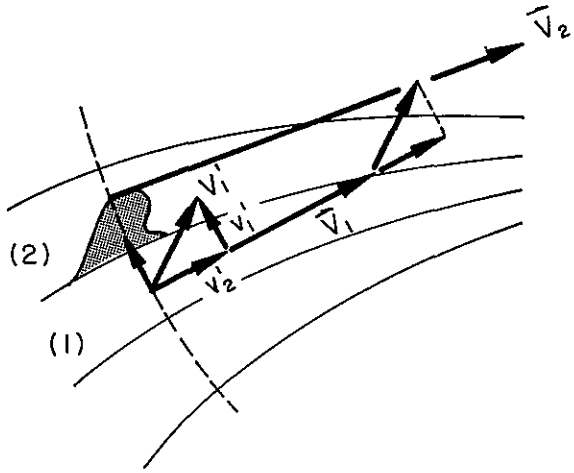

FIGURE VIII-2
CHANGE OF MOMENTUM BETWEEN TWO FLUID LAYERS BY TURBULENCE

the mean velocity $\overline{\overline{V}}_2$ of layer (2), this amount of fluid tends to slow down the speed of layer (2).

Similarly, because of the fluctuating components of the velocity, the amounts of fluid penetrating from layer (2) into layer (1) tend to increase the velocity of layer (1). In a word, because of the turbulence, the mean velocity of the two layers tends to become equal. It is seen that the fluctuating velocity forces act physically as external forces involving a shearing stress.

VIII-1.1.3 Comparison between Perfect Fluid, Viscous Flow and Turbulent Flow

In a turbulent flow these shearing stresses caused by turbulence are usually more active than the shearing stresses caused by viscosity. Hence the mean motion tends to flow similar to an ideal fluid.

However, at a boundary layer, the terms of the form $\rho \overline{u'v'}$ tend to zero since v' tends to zero because of the boundary. (Fig. VIII-3.) Conversely, the viscous term $\mu \frac{\partial^2 \overline{u}}{\partial y^2}$ increases near the boundary and becomes particularly important in the case of a smooth boundary.

The mean velocity distributions in a pipe, given by Fig. VIII-4 and corresponding to different assumptions made on the shearing stresses, illustrate these previous considerations.

The quantitative study of the velocity distribution in a turbulent flow depends upon the assumption made on the distribution of the value of the shearing stress τ. This will be a subject treated in further chapters.

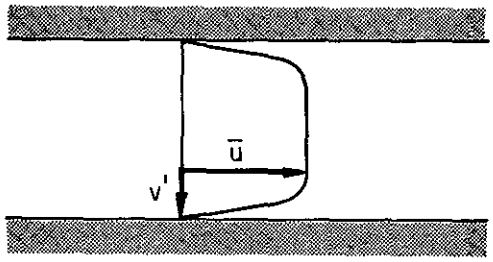

FIGURE VIII-3
THE SHEARING STRESSES CAUSED BY TURBULENCE DECREASES NEAR THE BOUNDARY, WHILE THE VISCOUS FORCE INCREASES

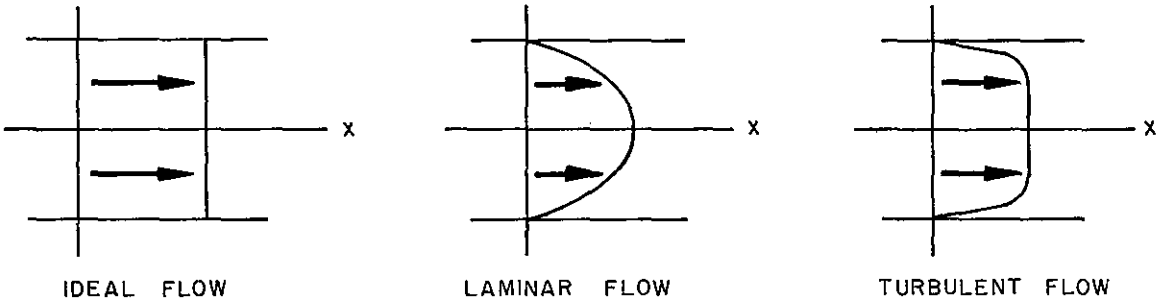

FIGURE VIII-4
VELOCITY DISTRIBUTION IN A PIPE

VIII-1.2 IRROTATIONAL MOTION

A turbulent motion is strongly rotational since the actual friction forces have an important effect. However, rotational motion occurs at random, like the turbulent fluctuations, and in the case of isotropic turbulence the mean motion is irrotational.

This could be deduced from the velocity distribution pattern. It has been seen that turbulent flow represents a velocity distribution very similar to the velocity distribution obtained in an ideal fluid, except in the boundary layer. Where the turbulence is non-isotropic, the mean flow is rotational, but out of the boundary layer the turbulence is nearly isotropic in a first approximation.

Hence, a number of methods of calculation which give the flow pattern in an ideal fluid may be successfully applied in a turbulent flow, as long as the boundary layer is thin with respect to the main flow.

It is evident that such an assumption is of particular importance in engineering practice since it permits a knowledge of the flow pattern of the mean motion in any convergent short structure, such as a bellmouth gallery or a spillway. (Figs. II-13 and II-14.)

These considerations are also illustrated by Fig. VIII-5.

VIII-1.3 PRESSURE

Considering the normal forces $[\sigma] = -p + 2\mu \frac{\partial \overline{u}}{\partial x} - \rho \overline{u'^2}$ and neglecting the viscous term $2\mu \frac{\partial \overline{u}}{\partial x}$, it is seen that a fluctuating force has to be added to pressure force. This fluctuating force results in an increase of the average pressure value. Some examples illustrate this fact.

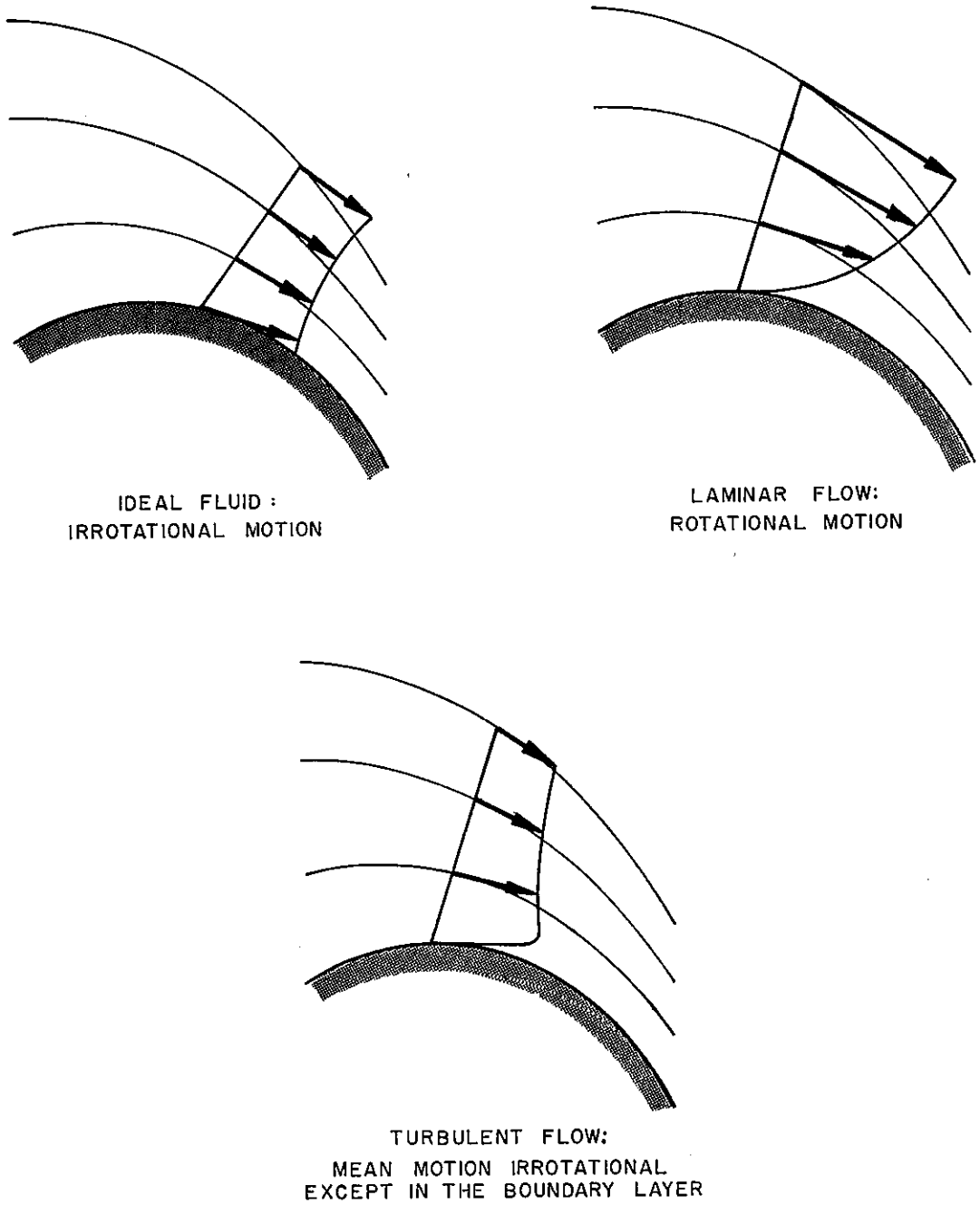

FIGURE VIII-5
A TURBULENT FLOW MAY OFTEN BE CONSIDERED AS IRROTATIONAL

It is seen in elementary hydraulics that the hydraulic jump theory is developed by equating the variation of momentum to the external forces, i.e. the difference of pressure forces before and after the jump. (Fig. VIII-6.) To be more exact, it would be necessary to add to the pressure forces the difference in $\int_0^h \left(\rho \overline{u'^2}\right) dh$ where h is the depth. This term is usually not indicated in textbooks and is, in fact, negligible.

However, this same factor is sufficient to explain why the resistance of a body moving with velocity V in calm water is different from the resistance of this same body when stationary in a turbulent flow of the same mean velocity V. This is the paradox of Du Buat. This phenomenon is caused by the difference of impulse of the turbulent convective inertia $\rho \overline{u'^2}$ acting against the body in a manner similar to pressure forces. They exist only because of the turbulence of the flow moving around the fixed body.

VIII-2 TURBULENT FLOW BETWEEN TWO PARALLEL PLANES

VIII-2.1 ESTABLISHMENT OF EQUATIONS OF MOTION

Consider the simple case of uniform steady turbulent motion between two horizontal parallel planes, as shown by Fig. VIII-7. Since the mean motion is steady the local inertia forces are zero: $\rho \frac{\partial \overline{u}}{\partial t} = 0$; $\rho \frac{\partial \overline{v}}{\partial t} = 0$; $\rho \frac{\partial \overline{w}}{\partial t} = 0$. Assuming that the mean velocity vector is parallel to the two planes in the OX direction, the components $\overline{v}$ and $\overline{w}$ along the OY and OZ axis respectively are zero and all the

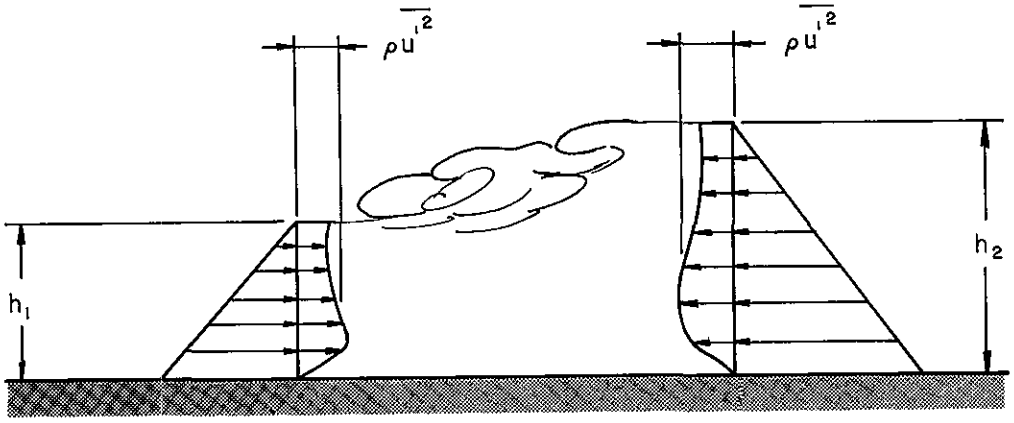

FIGURE VIII-6
TURBULENT FLUCTUATION TERMS HAVE TO BE ADDED TO THE PRESSURE FORCES

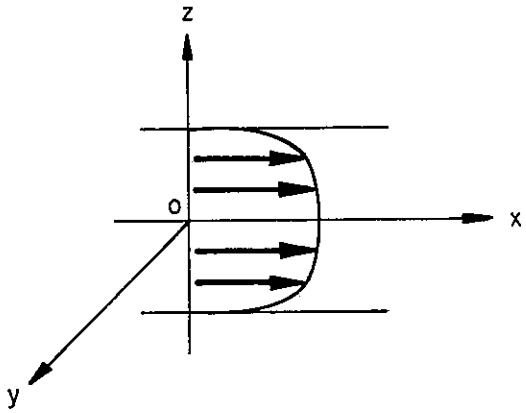

FIGURE VIII-7
TURBULENT FLOW BETWEEN TWO PARALLEL LINES

terms of the Reynolds equations where those quantities appear are zero. (See VII-5. 2) Since the mean motion is uniform, $\frac{\partial \overline{u}}{\partial x} = 0$. Then it is also seen that all the convective inertia terms are zero as in any case of uniform flow.

Now, considering the fluctuation terms, the variations of $\overline{u'^2}$, $\overline{v'^2}$, $\overline{w'^2}$, $\overline{u'v'}$, $\overline{u'w'}$, $\overline{v'w'}$ with respect to x are zero since the motion is uniform and the turbulence fully developed in the considered domain. On the other hand, the variations with respect to Y are zero since the two planes are assumed to be infinite, and the motion is two dimensional.

Finally, the Reynolds equations are reduced to:

$$0 = -\frac{\partial \overline{p^*}}{\partial x} + \mu \frac{\partial^2 \overline{u}}{\partial z^2} - \rho \frac{\partial \overline{u'w'}}{\partial z}$$

$$0 = -\frac{\partial \overline{p^*}}{\partial z} - \rho \frac{\partial \overline{w'^2}}{\partial z}$$

where $\overline{p^*} = \overline{p} + \rho gz$, while for a laminar flow between two parallel planes the Navier-Stokes equations would be written:

$$0 = -\frac{\partial p^*}{\partial x} + \mu \frac{\partial^2 u}{\partial z^2}$$

$$0 = -\frac{\partial p^*}{\partial z}$$

VIII-2. 2 INTEGRATION OF EQUATIONS OF MOTION

Now, integrating the second of the above equations with respect to z leads successively to:

$$0 = \frac{\partial}{\partial z} \left(\overline{p^*} + \rho \overline{w'^2} \right)$$

$$\overline{p^*} + \rho \overline{w'^2} = \text{const.}$$

Let the pressure at the boundaries be $\overline{p_o^*}$. Since $w' = 0$ at the boundaries, the mean pressure $\overline{p^*}$ at any point of the flow is smaller than the mean pressure at the boundary $\overline{p_o^*}$ by the quantity $\rho \overline{w'^2}$.

VIII-2.3 VARIATION OF THE MEAN PRESSURE IN A TURBULENT FLOW

If $\overline{U}_o$ is the mean velocity between the two planes, it has been found experimentally that $\frac{\overline{u'^2}}{\overline{U}_o^2} < 0.01$ and $\frac{\overline{v'^2}}{\overline{U}_o^2}$ and $\frac{\overline{w'^2}}{\overline{U}_o^2} < 0.0025$.

Hence the difference:

$$\frac{\overline{p_o^*} - \overline{p^*}}{\frac{\rho}{2} \overline{U}_o^2} = 2 \frac{\overline{w'^2}}{\overline{U}_o^2}$$

is always smaller than 0.0050 and is neglected. The pressure distribution in a turbulent uniform flow is hydrostatic (at least within 0.5%).

VIII-2.4 SECONDARY CURRENTS

Such variations of pressure caused by the fluctuation terms give rise to the origin of secondary currents in straight channels and non-circular pipes. Secondary currents take place when non-symmetrical effects of the turbulent shearing stresses exist in the flow, that is, each

time that the boundary is non-circular.

These secondary currents go from the zone of high shearing stress to the zone of lower shearing stresses as shown by Fig. VIII-8. They have a tendency to equalize the shearing stresses at the boundary. Hence they are secondary only in name: they partly justify the use by engineers of the empirical tool, so-called hydraulic radius. It is to be recalled that the definition of hydraulic radius is based on the assumption that the shearing stress at the boundary is a constant. The limitations of applicability of the hydraulic radius definition must be known. A change in the secondary current pattern in a flow has an effect on the head loss which is not negligible. However, this effect is neglected in hydraulics because it is not yet known.

VIII-3 MODERN THEORIES ON TURBULENCE

VIII-3.1 THE UNKNOWNS IN A TURBULENT FLOW

In Chapter I, it was seen that problems in hydraulics consist of finding the four unknowns, u, v, w and p. For turbulent flow, the four unknowns are $\overline{u}$, $\overline{v}$, $\overline{w}$ and $\overline{p}$. However, four other unknowns, u', v', w' and p' have been introduced, theoretically requiring four other equations unless the fluctuation terms may be neglected.

It is seen that p' does not appear in the Reynolds equation for the mean motion because of the linearity of the pressure forces. Moreover, p' is usually very small in comparison with $\overline{p}$. p' should be taken into account only for some very special problems which are not yet very well known.

A relationship is established between the fluctuation values u', v', w' (or more specifically functions of them, such as $\overline{u'v'}$, $\overline{v'w'}$, $\overline{u'w'}$) and the mean values $\overline{u}$, $\overline{v}$, $\overline{w}$. So, the fluctuation terms are expressed as functions of the mean values $\overline{u}$, $\overline{v}$, $\overline{w}$.

More recent methods consist of applying probability calculus and random functions since a turbulent fluctuation is random in nature. Although progress has been made in the statistical theory of turbulence, only isotropic and homogeneous turbulences are well analyzed. However, isotropic turbulence is an idealized case never encountered as is the abstract concept of irrotationality never encountered. Further serious investigation into non-isotropic turbulence is necessary.

VIII-3.2 BOUSSINESQ THEORY

In order to simplify the Reynolds equation, Boussinesq introduced the turbulent exchange coefficient ϵ, dimensionally equal to the coefficient of viscosity μ. In the case of uniform flow parallel to a plane in the OX direction ($\overline{u} = \overline{u}(y)$, $\overline{v} = 0$, $\overline{w} = 0$), ϵ is defined by the equality $\rho\,\overline{u'v'} = -\epsilon \dfrac{d\overline{u}}{dy}$. Then the shearing stress $[\tau]$ becomes $[\tau] = (\mu + \epsilon)\dfrac{d\overline{u}}{dy}$ instead of $\tau = \mu \dfrac{du}{dy}$. $[\tau]$ is given by a linear relationship.

From this relationship it may be seen that the fluctuation term would act similar to the viscous term, their effect being simply added linearly. They are of a different order of magnitude, that is $\epsilon \ggg \mu$ and $[\tau] \cong \epsilon \dfrac{d\overline{u}}{dy}$.

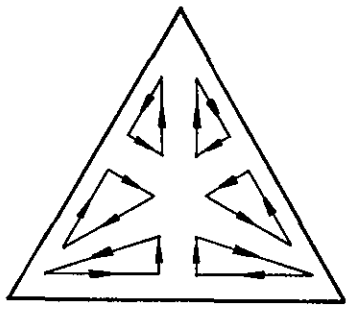

FIGURE VIII-8
SECONDARY CURRENTS
IN A TRIANGULAR PIPE

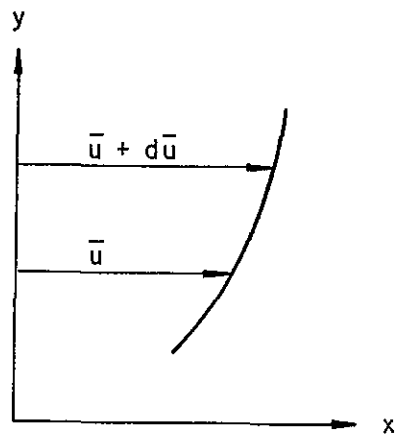

FIGURE VIII-9
MIXING LENGTH - NOTATION

Such a relationship gives a velocity distribution similar to that obtained in a laminar flow from the Navier-Stokes equations. Since it would be necessary to consider that ϵ varies with respect to space, the Boussinesq theory is a failure. However, in some cases relative to the motion of atmospheric layer, ϵ is approximately a constant and the Boussinesq assumption is applied to obtain a result at a first order of approximation.

VIII-3.3 PRANDTL THEORY FOR MIXING LENGTH

The mixing length theory has been introduced by Prandtl by analogy with the mean free path as it is defined in kinetic theory of gases. It is the momentum transfer theory.

Consider the flow $\overline{u} = \overline{u}(y)$, $\overline{v} = 0$, $\overline{w} = 0$ parallel to the OX axis. (Fig. VIII-9.) The mean velocities are $\overline{u}$ and $\overline{u} + d\overline{u}$ at two points on a perpendicular to the boundary $Y = 0$.

According to Prandtl, it is assumed that the fluctuation terms u' and v' are proportional to the difference in velocity $d\overline{u}$ which is equal to: $d\overline{u} = \frac{d\overline{u}}{dy}\, dy$, such that $\overline{u'v'} = -\ell^2 \left(\frac{d\overline{u}}{dy}\right)^2$ or $|u'|$ and $|v'| \approx \ell \frac{d\overline{u}}{dy}$. ℓ is the "mixing length" and is proportional to dy. ℓ may be physically considered as the length which may be traversed by a ball of fluid perpendicular to the mean velocity vector $\overline{\vec{u}}$. It is evident that according to this definition, ℓ is equal to zero at the boundary since a ball of fluid cannot pass through the boundary.

On the other hand, $\overline{u'v'}$ always has the opposite sign of $\frac{d\overline{u}}{dy}$. If one considers a ball of fluid moving from the boundary to the middle of the flow, $v' > 0$ since it is moving from a layer where $\overline{u}$ is smaller to a layer where $\overline{u}$ is larger. It causes a slowing down of the motion, hence $u' < 0$. Conversely, if one considers a ball of fluid moving toward the boundary, v' is negative while u' is positive. Since $\overline{u'v'}$ is always negative, the shearing stresses caused by turbulence, $\tau = -\rho\,\overline{u'v'}$, are positive, as is $\frac{d\overline{u}}{dy}$.

If a velocity distribution has been considered such that $\frac{d\overline{u}}{dy}$ is negative, it will be similarly found that $-\rho\,\overline{u'v'}$ is always negative. Consequently, in any case, $[\tau]$ has the same sign as $\frac{d\overline{u}}{dy}$, which is emphasized by writing:

$$[\tau] = \rho\,\ell^2 \left|\frac{d\overline{u}}{dy}\right| \frac{d\overline{u}}{dy}$$

In the general case,

$$[\tau] = \mu\,\frac{d\overline{u}}{dy} + \rho\,\ell^2 \left|\frac{d\overline{u}}{dy}\right| \frac{d\overline{u}}{dy}$$

This function may be linearized with the help of the Boussinesq coefficient ϵ (See VIII-3.2):

$$\epsilon = \rho\ell^2 \left|\frac{d\overline{u}}{dy}\right|$$

Despite a more complex mathematical form, the main advantage of the Prandtl theory over the Boussinesq theory is that it is easier to assume the value of ℓ than the value of ϵ.

VIII-3.4 TAYLOR'S VORTICITY TRANSPORT THEORY

Instead of considering the change of momentum from one layer to another as Prandtl did, Taylor considered the change of moment of momentum.

This theory sometimes gives the same result. For example, the velocity distributions in a two-dimensional jet given by both theories are the same. However, when the mixing length is a function of the normal distance from the boundary, different results are obtained.

VIII-3.5 VALUE OF THE MIXING LENGTH

Now the value of the mixing length has to be determined. Various formulas are proposed.

The first kind of formula for the mixing length is purely empirical and valid only for special cases. Some examples are:

a) At the boundary of a jet ℓ is proportional to the distance from the orifice.

b) Against the wall of a pipe ℓ is assumed to be proportional to the distance y from the boundary: $\ell = ky$ where k is a constant. This means physically that the amplitude of a turbulent fluid ball is zero at the boundary and increases linearly with the distance from the boundary.

Introducing this value in the Prandtl formulas yields:

$$[\tau] = \rho k^2 y^2 \left|\frac{d\bar{u}}{dy}\right| \frac{d\bar{u}}{dy}$$

If $[\tau]$ is considered as a constant, a "universal velocity distribution" is obtained by integrating with respect to y :

$$\bar{u} = \sqrt{\frac{[\tau]}{\rho}} \left(\frac{1}{k} \text{Ln} y + \text{constant}\right)$$

$[\tau]$ has been considered as a constant by Prandtl in the theory of the boundary layer along a flat plate. The values of the constants are determined by experiment. In a pipe $[\tau]$ is considered as a linear function of the distance from the wall as it is explained in elementary hydraulics. Both cases are theoretically approximate, but give results close to factual measurements.

VIII-3.6 VON KÁRMÁN'S SIMILARITY HYPOTHESIS

Von Kármán tried to find a value for ℓ independent of the kind of flow, according to two similarity assumptions:

a) The turbulence mechanism is independent of viscosity (except near a smooth boundary).

b) The turbulent fluctuations are statistically the same at any point but change only in time and length scales.

From this assumption Von Kármán found that

$$[\tau] = \rho \ell^2 \left| \frac{d\bar{u}}{dy} \right| \frac{du}{dy}$$

as Prandtl, and

$$\ell = k \frac{\frac{d\bar{u}}{dy}}{\frac{d^2\bar{u}}{dy^2}} \qquad \text{Hence } [\tau] = \frac{\rho k^2 \left(\frac{d\bar{u}}{dy}\right)^4}{\left(\frac{d^2\bar{u}}{dy^2}\right)^2}$$

where k is a universal constant, experimentally found to be equal to 0.4 .

VIII-3.7 OTHER THEORIES

Other theories were proposed to improve these semi-empirical formulas. Particularly, in order to avoid $\epsilon = 0$ when $\frac{d\bar{u}}{dy} = 0$, for example, in the middle of a pipe, Prandtl proposed:

$$[\tau] = \rho \ell^2 \left[\left(\frac{d\bar{u}}{dy} \right)^2 + \ell'^2 \left(\frac{d^2\bar{u}}{dy^2} \right)^2 \right]$$

But it is difficult to know the best value of ℓ'.

These various theories, and particularly the Prandtl and Von Kármán theories, have been very successfully applied in a number of practical cases (wall, pipe, etc.). However, they do not seem so successful when the flow is not uniform (bend, divergent, etc.). Hence, the solution to problems in turbulence will be the use of statistical mechanics, as introduced by Taylor, Von Kármán and Kampe de Feriet.

VIII-4 SOME CONSIDERATIONS ON THE LOSS OF ENERGY IN A UNIFORM FLOW

VIII-4.1 A REVIEW OF ELEMENTARY HYDRAULICS

It has been seen in elementary hydraulics that the head loss in a uniform flow is:

a) Proportional to the mean value through a cross section of the velocity V when the flow is laminar;

b) Proportional to its square value V^2 when the flow is turbulent and the boundary is rough; and

c) A complex intermediate function of V (V^n) when the flow is turbulent and the boundary is smooth. ($1 < n < 2$)

VIII-4.2 A THEORETICAL EXPLANATION FOR THE VALUE OF HEAD LOSS

The above result may be partly explained by the following considerations. A part of the kinetic energy of the primary (or mean) motion of a turbulent flow is continuously absorbed to provide the turbulent fluctuations. The kinetic energy of these turbulent fluctuations is a quadratic function of the fluctuating velocities. Since all these fluctuations are finally absorbed by friction, the loss of energy in a turbulent flow is a quadratic function of the fluctuating velocities.

On the other hand, the fluctuating velocities are roughly linear functions of the mean velocities. It has been seen that

$$[\tau] = \mu \frac{d\bar{u}}{dy} - \rho \overline{u'v'} = \mu \frac{d\bar{u}}{dy} + \rho \ell^2 \left| \frac{d\bar{u}}{dy} \right| \frac{d\bar{u}}{dy}$$

As long as $\mu \frac{\partial \bar{u}}{\partial y}$ is negligible, $\overline{u'v'}$ is a quadratic function of $\bar{u}$, and the head loss is proportional to $\bar{u}^2$, that is, proportional to V^2.

In the case of a smooth boundary, the term $\frac{d\bar{u}}{dy}$ is no longer negligible in the boundary layer. Hence the head loss is a complex intermediate function of $\bar{u}$, that is, a complex function of V.

In the case of a laminar flow, $[\tau]$ is simply equal to $\tau = \mu \frac{d\bar{u}}{dy}$ and the head loss is a linear function $\bar{u}$ ($\bar{u} = u$), hence a linear function of V. This topic is further developed in Section XIV-4.

VIII-4.3 WORK DONE BY TURBULENT FORCES

It is evident that because of the turbulence the loss of energy in a turbulent flow is much greater than in a laminar flow. It

is important to note the following considerations:

The mean value of the viscous forces per unit of volume has been found to be:

$$\mu \overline{\nabla^2 \vec{V}} = \mu \nabla^2 \overline{\vec{V}} + \mu \overline{\nabla^2 \vec{V}'}$$

where

$$\mu \overline{\nabla^2 \vec{V}'} = \mu \nabla^2 \overline{\vec{V}'} = 0$$

The term $\mu \nabla^2 \overline{\vec{V}}$ is small by comparison to the kinematic forces caused by turbulent fluctuations. The mean value of the viscous forces caused by these turbulent fluctuations is zero.

If instead of considering the mean forces, one considers the mean value of the work done by these forces, quite a different result is obtained. Consider, for example, the mean shearing force $\mu \overline{\frac{\partial u}{\partial x}}$. This force is equal to $\mu \frac{\partial \overline{u}}{\partial x}$ since $\mu \overline{\frac{\partial u'}{\partial x}} = \mu \frac{\partial \overline{u'}}{\partial x} = 0$. The work done by this force in a unit of time is:

$$dy\, dz\, \mu \frac{\partial u}{\partial x} \left[- u + (u + \frac{\partial u}{\partial x})dx\right] = \frac{\mu}{2} \left(\frac{\partial u}{\partial x}\right)^2 dx\, dy\, dz$$

and by unit of volume: $\frac{\mu}{2} \left(\frac{\partial u}{\partial x}\right)^2$. The mean value of this work with respect to time is successively:

$$W = \frac{\mu}{2} \overline{\left(\frac{\partial u}{\partial x}\right)^2} = \frac{\mu}{2} \overline{\left(\frac{\partial \overline{u}}{\partial x} + \frac{\partial u'}{\partial x}\right)^2}$$

The double product being zero:

$$2\,\overline{\frac{\partial \bar{u}}{\partial x}\,\frac{\partial u'}{\partial x}} = 2\,\frac{\partial \bar{u}}{\partial x}\,\frac{\partial}{\partial x}\,\frac{1}{T}\int_0^T u'\,dt = 0$$

one finally obtains:

$$W = \frac{\mu}{2}\left(\frac{\partial \bar{u}}{\partial x}\right)^2 + \frac{\mu}{2}\,\overline{\left(\frac{\partial u'}{\partial x}\right)^2}$$

The second term is always positive, hence its mean value is not zero.

Moreover, u' is generally smaller than $\bar{u}$, but the variation of u' with respect to space (in this expression with respect to x : $\frac{\partial u'}{\partial x}$) is usually greater than the variation of $\bar{u}$ with respect to space (in this expression with respect to x : $\frac{\partial \bar{u}}{\partial x}$). The first term $\frac{\mu}{2}\left(\frac{\partial \bar{u}}{\partial x}\right)^2$ may often be neglected and $W \simeq \frac{\mu}{2}\,\overline{\left(\frac{\partial u}{\partial x}\right)^2}$.

Hence the loss of energy and the head loss are mainly due to the turbulent fluctuations.

VIII-4.4 DISSIPATION FUNCTION IN A TURBULENT MOTION

A similar result may be obtained by considering all the terms of the dissipation function Φ presented in Chapter V-5.5 in which u, v, w are replaced by $\bar{u}$, $\bar{v}$, $\bar{w}$, u', v', w'. Then it is found that the mean value for Φ is the sum of two terms: Φ_m and Φ_t :

$\Phi = \Phi_m + \Phi_t$, where Φ_m is a function of the mean values $\bar{u}$, $\bar{v}$, $\bar{w}$ only, and is small by comparison with Φ_t, a function of u', v', w' only.

$$\Phi_m = \mu \left[\left(\frac{\partial \bar{u}}{\partial y} \right)^2 + \ldots + \left(\frac{\partial \bar{u}}{\partial y} + \frac{\partial \bar{v}}{\partial x} \right)^2 + \ldots \right]$$

$$\Phi_t = \mu \left[\overline{\left(\frac{\partial u'}{\partial x} \right)^2} + \ldots + \overline{\left(\frac{\partial u'}{\partial y} + \frac{\partial v'}{\partial x} \right)^2} + \ldots \right]$$

Φ_t is the part of energy which is absorbed by friction because of the turbulent fluctuations.

VIII-1 Explain why $[\tau]$ is considered as a constant along a perpendicular to the wall in the boundary layer theory and varies linearly with distance from the wall in the case of a uniform flow in a pipe or between two parallel planes. Explain the limitation of these assumptions. What is the criterion for the pressure distribution on which such assumptions are based?

VIII-2 It has been found experimentally that

$$\bar{u} = \sqrt{\frac{[\tau_o]}{\rho}} \left(\frac{y}{D}\right)^{1/6}$$

where D is the distance between two parallel planes. Give the expressions for $[\tau]$ and Prandtl's mixing length ℓ as functions of y.

VIII-3 Using the von Kármán similarity rule

$$\tau = \rho K^2 \frac{(du/dy)^4}{(d^2\bar{u}/dy^2)^2}$$

and the relationship

$$\frac{\partial \bar{p}}{\partial x} = \text{constant}$$

along the centerline, derive the following universal velocity distribution

law for a rectangular channel of width $2h$

$$\overline{u} = \overline{u_o} + \frac{1}{K}\sqrt{\frac{\tau_o}{\rho}}\left[\ell n\left(1 - \sqrt{\frac{y}{h}}\right) + \sqrt{\frac{y}{h}}\right]$$

where $\overline{u_o}$ is the velocity at the centerline $y = 0$ and τ_o is the shear stress at the wall.

VIII-4 It will be assumed that the velocity distribution in a cylindrical pipe of radius R is given by the one-seventh power law, i.e.,

$$\frac{u}{U} = \left(\frac{R - r}{R}\right)^{1/7}$$

where U is the maximum velocity on the centerline. Then give an expression for the Prandtl's mixing length as a function of r.

CHAPTER IX

FLOW IN A POROUS MEDIUM -- LAW OF DARCY

Conclusion of Part I

IX-1 AVERAGE MOTION IN A POROUS MEDIUM

IX-1.1 THE BASIC EQUATIONS

Because of their importance in engineering practice where a great number of applications are encountered, the laws governing flow in a porous medium have to be studied in detail.

The basic laws to be applied are again the continuity relationship and, usually, the momentum equation. The momentum principle, expressed by the Navier-Stokes equations, is theoretically valid for this kind of motion. However, because of the complexity of the boundary conditions (since $V = 0$ at the surface of every grain of the porous medium), this equation is no longer useful in this form. Some approximations and transformations must be performed.

IX-1.2 SIMPLIFICATION OF BOUNDARY CONDITIONS FOR THE MEAN MOTION

First of all, the grains are assumed to be distributed at random. The flow obeys statistical laws. (The case of non-isotropic porous medium, such as varved clays, necessitates the consideration of a coefficient of permeability which varies with direction.) Hence,

instead of dealing with the real values of velocity and pressure, varying in a very complex manner, only the mean values need be considered.

It is evident that such a method considerably simplifies the boundary conditions since these conditions have to be expressed only to the boundaries of the mean flow, i. e. the limits of the porous medium and the free surface.

IX-1.3 DIFFUSION IN A POROUS MEDIUM

It is known that in a laminar flow the mixing process is very slow since it is caused only by molecular agitation, while in a turbulent flow it is rapid since it is caused by the turbulence fluctuations. In a laminar flow through a porous medium, because of the random nature of the particle distribution, it may be observed that dye diffuses quickly although the flow is laminar. (Fig. IX-1.) The concentration curve is given by a Gaussian shaped distribution.

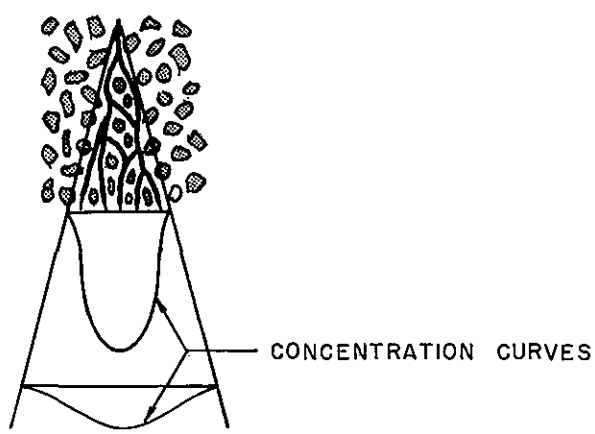

FIGURE IX - 1
DIFFUSION THROUGH A POROUS MEDIUM

The angle of the cone of diffusion is a function of the characteristics of the porous medium and is approximately 6°. This angle increases when the flow becomes turbulent; it is then a function of the Reynolds number as defined in Sec. IX-3.1 .

IX-1.4 DEFINITION OF THE MEAN MOTION IN A UNIFORM FLOW

The most simple way of defining the mean velocity consists of considering a unidimensional porous medium as shown by Fig. IX-2 .

The mean velocity or "specific velocity" is the ratio of the discharge Q to the total area A, $V = Q/A$, independent of the void coefficient.

Now, if the motion is referred to a three-axis system of coordinates OX, OY, OZ (see Fig. IX-2), the three real velocity components, u, v, w are different from zero. Their mean values in the porous medium are respectively:

$$\overline{\overline{u}} = \frac{1}{\text{Vol.}} \iiint_{\text{Vol.}} u \, d(\text{Vol.}) = \frac{1}{A} \iint_{A} u \, dA = V$$

$$\overline{\overline{v}} = \frac{1}{\text{Vol.}} \iiint_{\text{Vol.}} v \, d(\text{Vol.}) = \frac{1}{A} \iint_{A} v \, dA = 0$$

$$\overline{\overline{w}} = \frac{1}{\text{Vol.}} \iiint_{\text{Vol.}} w \, d(\text{Vol.}) = \frac{1}{A} \iint_{A} w \, dA = 0$$

where Vol. is the total volume of the porous medium. The mean values with respect to space are written with two bars instead of one to

be differentiated from the mean value with respect to time $(\overline{V})$ as used in studies of turbulent motions.

IX-1.5 GENERAL DEFINITION OF THE MEAN MOTION

For a more complicated pattern of the mean motion, as shown by Fig. IX-3, where a variation of the mean value of the velocity with respect to space also exists, the mean value of the velocity vector has to be defined in an elementary volume Δ Vol. $= \Delta x\, \Delta y\, \Delta z$ of porous medium as follows:

$$V = \frac{1}{\Delta x\, \Delta y\, \Delta z} \iiint_{\Delta x\, \Delta y\, \Delta z} \vec{V}\, dx\, dy\, dz$$

and along three coordinate axes:

$$\overline{\overline{u}} = \frac{1}{\Delta x\, \Delta y\, \Delta z} \iiint_{\Delta x\, \Delta y\, \Delta z} u\, dx\, dy\, dz$$

$$\overline{\overline{v}} = \frac{1}{\Delta x\, \Delta y\, \Delta z} \iiint_{\Delta x\, \Delta y\, \Delta z} v\, dx\, dy\, dz$$

$$\overline{\overline{w}} = \frac{1}{\Delta x\, \Delta y\, \Delta z} \iiint_{\Delta x\, \Delta y\, \Delta z} w\, dx\, dy\, dz$$

$\overline{\overline{v}} = 0$ in the case of a mean two-dimentional flow as that shown by Fig. IX-3.

Such an elementary volume of porous medium must theoretically be large enough for the averaging process to be valid. Hence, $\Delta x\, \Delta y\, \Delta z$ must be large enough to contain a number of grains distributed at random.

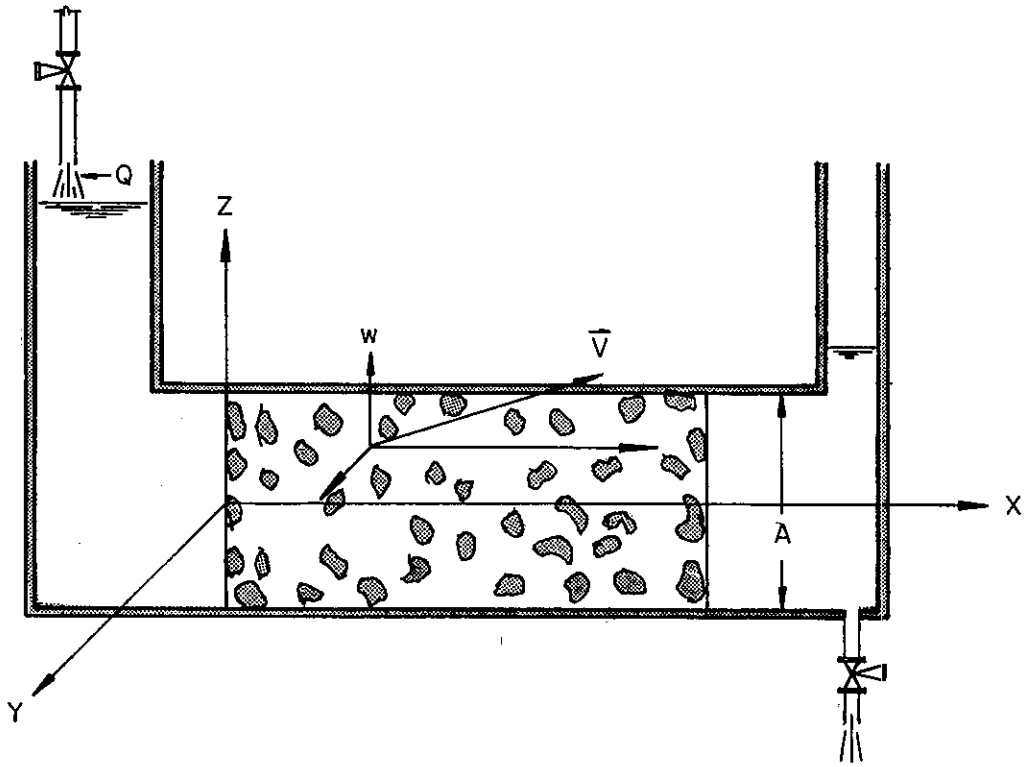

FIGURE IX - 2
MEAN UNIFORM FLOW THROUGH POROUS MEDIUM

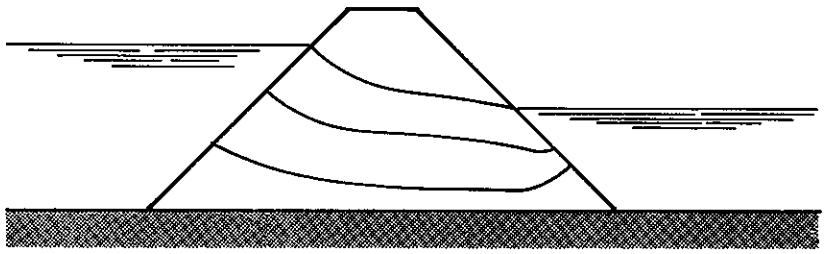

FIGURE IX - 3
MEAN NON-UNIFORM FLOW THROUGH POROUS MEDIUM

On the other hand, $\Delta x\, \Delta y\, \Delta z$ must theoretically be small enough to be considered as infinitely small $dx\, dy\, dz$ in order to apply the methods of differential calculus.

In other words, $\Delta x\, \Delta y\, \Delta z$ has to be large enough for the averaging process to be valid, but small enough to be considered as infinitely small in the mean motion. For both these opposing conditions to be satisfied the gradient of real velocity has to be much greater than the gradient of the mean velocity. This may be physically translated as: a large flow pattern through relatively small grains or pebbles. A small flow pattern around some large rocks does not obey the statistical laws which are valid for a mean motion.

IX-1.6 PRESSURE

Similarly the mean pressure is defined by:

$$\bar{\bar{p}} = \frac{1}{\Delta x\, \Delta y\, \Delta z} \iiint_{\Delta x\, \Delta y\, \Delta z} p\, dx\, dy\, dz$$

The variations of p around $\bar{\bar{p}}$ are mainly caused by the curvature of the paths around the grains. Such variations are proportional to the convective inertia, that is proportional to the square of the velocity, which is usually negligible.

A piezometer inserted in a porous medium may integrate these variations if it is large enough.

IX-1.7 BOUNDARY CONDITIONS

The boundary conditions are expressed as a function of the

mean velocity at the boundary of the porous medium instead of being expressed as a function of the real velocity at the boundary of each grain.

IX-1.8 ANALOGIES BETWEEN TURBULENT FLOW AND FLOW THROUGH A POROUS MEDIUM

Interesting theoretical analogies may be made between the methods of studying turbulent flow and flow through a porous medium.

In both cases the mean velocity and mean pressure are dealt with because of the random nature of the flows. In the case of turbulence the mean values are defined at a given point with respect to time, while in the case of flow through a porous medium the mean values are defined with respect to space. (see VII-1.3.)

$$\overline{\vec{V}} = \frac{1}{T}\int_0^T \vec{V}\,dt \;, \qquad \overline{\overline{\vec{V}}} = \frac{1}{\text{Vol.}}\iiint_{\text{Vol.}} \vec{V}\,d(\text{Vol.})$$

The time T has to be long enough for the averaging process to be valid, but short enough to take account of whether the mean motion is steady or unsteady. (See VII-1.4.) The elementary volume $\Delta x\,\Delta y\,\Delta z$ must obey similar considerations with respect to space as has been discussed in IX-1.4 .

The fluctuation terms u', v', w', p' found in the studies of turbulence exist also with respect to space in the studies of flow through a porous medium, and their mean value is also zero by definition: $\vec{V} = \overline{\overline{\vec{V}}} + V'$.

$$\frac{1}{\Delta x\,\Delta y\,\Delta z} \iiint_{\Delta x\,\Delta y\,\Delta z} \vec{V'}(\text{or } p')\,dx\,dy\,dz = 0$$

The momentum equation of the mean motion in a porous medium is obtained by averaging each of the forces with respect to space, as has been done with respect to time in the study of turbulent flow. This will be the subject of Sec. IX-2 .

Then, both turbulent flow and flow through a porous medium are strongly rotational as far as the real motion is concerned. However, their mean motions may be irrotational. (See VIII-1.2 and IX-2.5.)

An isotropic turbulent flow may be considered analogous to flow through an isotropic medium.

Turbulent flow through a porous medium will have to be studied by considering the mean values with respect to both space and time:

$$\overline{\overline{\vec{V}}} = \frac{1}{T}\int_0^T \frac{1}{\Delta x\,\Delta y\,\Delta z} \iiint_{\Delta x\,\Delta y\,\Delta z} \vec{V}\,dx\,dy\,dz\,dt$$

IX-1.9 CONTINUITY RELATIONSHIP

Considering the mean velocities with respect to space passing across the plane sides of a cube defining an elementary volume of a porous medium, it is found by a demonstration similar to that given in Chapter III that the continuity relationship is:

$$\frac{\partial \overline{\overline{u}}}{\partial x} + \frac{\partial \overline{\overline{v}}}{\partial y} + \frac{\partial \overline{\overline{w}}}{\partial z} = 0$$

That is, the continuity relationship for the mean motion has the same mathematical form as for other kinds of flow.

IX-2 LAW OF DARCY

IX-2.1 CAPILLARITY EFFECT

First of all, it must be noted that for certain flows with a free surface through a very fine porous medium, the capillarity forces could have an appreciable effect on the flow pattern and the discharge through it. For example, the rise of the free surface in an earth dam of grain size near 0.1 mm. is about one foot. (Fig. IX-4)

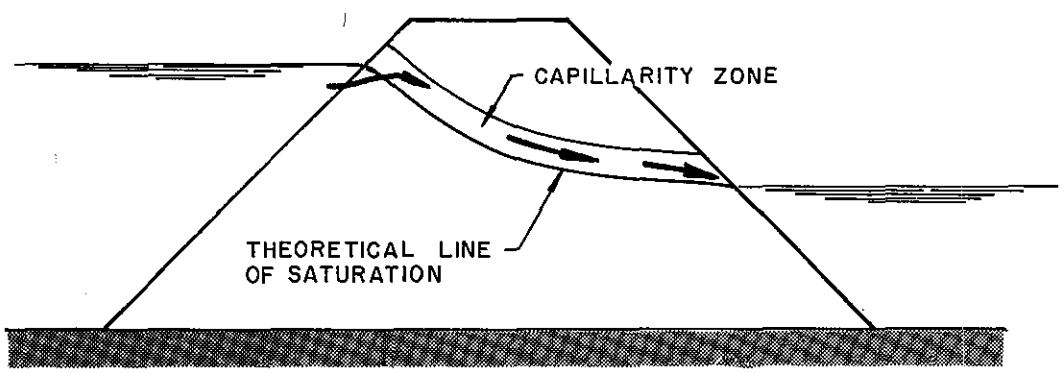

FIGURE IX-4
CAPILLARITY EFFECTS IN A FLOW THROUGH POROUS MEDIUM

IX-2.2 THE PRINCIPLE OF THE AVERAGING PROCESS

Insofar as these capillarity effects may be neglected, the momentum equation expressed as a function of the mean values is given by the same averaging operation with respect to space as was done for a turbulent flow with respect to time.

Since the sum of the real value of the different forces involved is always zero,

$$\text{inertia force} + \text{gravity force} + \text{pressure force} + \text{friction force} = 0$$

the sum of their mean values with respect to space is also equal to zero:

$$\begin{matrix}\text{Mean}\\ \text{Value with}\\ \text{Respect to}\\ \text{Space}\end{matrix} \left[\text{inertia force} + \text{gravity force} + \text{pressure force} + \text{friction force}\right] = 0$$

IX-2.3 APPROXIMATION

For a first approximation, the inertia forces are neglected. The local inertia is neglected because the variation of the ground water table is usually very slow. From this point of view, unsteady motions through a porous medium are usually studied as a succession of steady motions. (See IV-5.1.) However, some special problems require the consideration of the local inertia, for example, perviousness of a rockfill breakwater to periodical gravity waves.

The convective inertia is also neglected. Since the velocity is usually very small, the square of the velocity and terms which are functions of the square of the velocity (such as the convective inertia

forces) are of a second order of magnitude in comparison with other terms. (See IV-5.2.1.) The range of validity of such an assumption is studied further.

IX-2.4 MEAN FORCES - - LAW OF DARCY

Finally the momentum equation is reduced to an equality of applied forces:

$$\frac{1}{\Delta x\,\Delta y\,\Delta z}\iiint_{\Delta x\,\Delta y\,\Delta z}\left(-\frac{\partial(p+\rho g z)}{\partial x}+\mu\,\nabla^2 u\right)dx\,dy\,dz = 0$$

Two similar equations may be written along the two other axes OY and OZ . These three equations are reduced vectorially to:

$$\frac{1}{\Delta x\,\Delta y\,\Delta z}\iiint_{\Delta x\,\Delta y\,\Delta z}\left[-\overrightarrow{\mathrm{grad}}(p+\rho g z)+\mu\,\nabla^2\vec{V}\right]dx\,dy\,dz = 0$$

In calculating these equations as functions of the mean value $\overline{\overline{V}}$ and $\overline{\overline{p}}$, it is to be noted that they include:

one constant force: gravity force

two linear forces: pressure force and viscous force

Following the same process of integration as that used in turbulent motion (see VII-2), it is found that:

$$\frac{1}{\Delta x\,\Delta y\,\Delta z}\iiint_{\Delta x\,\Delta y\,\Delta z} -\overrightarrow{\mathrm{grad}}(p+\rho g z)\,dx\,dy\,dz = -\overrightarrow{\mathrm{grad}}\,(\overline{\overline{p}}+\rho g z)$$

Now consider the viscous forces. Since they are linear, it is reasonable to expect that they are proportional to the mean velocity $\overline{\overline{V}}$ as long as there are

no quadratic effects caused by the convective inertia and turbulence. Hence it is written that they are proportional to $\mu \overline{\overline{V}}$ such that

$$\frac{1}{\Delta x\, \Delta y\, \Delta z} \iiint_{\Delta x\, \Delta y\, \Delta z} \mu\, \nabla^2 V \; dx\, dy\, dz = \frac{\mu}{k} \overline{\overline{\vec{V}}}$$

where k is the permeability of the porous medium, an empirical function of the void coefficient and grain size. $K = \frac{k}{\mu}$ is the so-called "hydraulic conductivity" which measures the permeability of the porous medium to the fluid. Hence the "Law of Darcy" is finally written:

$$\overline{\overline{u}} = K \frac{\partial}{\partial x} (\overline{\overline{p}} + \rho g z) = K \frac{\partial \overline{\overline{p}}^*}{\partial x}$$

$$\overline{\overline{v}} = K \frac{\partial}{\partial y} (\overline{\overline{p}} + \rho g z) = K \frac{\partial \overline{\overline{p}}^*}{\partial y}$$

$$\overline{\overline{w}} = K \frac{\partial}{\partial z} (\overline{\overline{p}} + \rho g z) = K \frac{\partial \overline{\overline{p}}^*}{\partial z}$$

or vectorially:

$$\overline{\overline{\vec{V}}} = K \overrightarrow{\text{grad}}\, (\overline{\overline{p}} + \rho g z) = K \overrightarrow{\text{grad}}\, \overline{\overline{p}}^*$$

In a non-isotropic porous medium, K has different values -- K_x, K_y, K_z -- along the three components axes OX, OY and OZ respectively.

This law states that the mean velocity of the fluid flowing through a porous medium is directly proportional to the pressure gradient acting on the fluid. $\overline{\overline{p}}^* = \overline{\overline{p}} + \rho g z$ is the piezometric head. The simplification of the friction term is of an empirical nature and it seems

difficult to justify such a law rigorously. It would be necessary to go through the calculation for a flow as shown in Fig. IX-1 . On the other hand, it would seem reasonable to think that the Navier-Stokes equations are no longer valid, from a microscopic point of view, for a flow passing through the very fine channels of a porous medium, like porous china, which would probably require a study based on molecular agitation. This subject is relevant to the kinetic theory of liquids.

IX-2.5 IRROTATIONAL MOTION AND FLOW THROUGH POROUS MEDIUM

It is important to note that such a mean motion defined by the law of Darcy is always irrotational.

Introducing the value $\overline{\overline{u}}$, $\overline{\overline{v}}$, $\overline{\overline{w}}$ given above, it is easy to verify that $\frac{\partial \overline{\overline{u}}}{\partial y} - \frac{\partial \overline{\overline{v}}}{\partial x} = 0$ since:

$$\frac{\partial}{\partial y}\left[\frac{k}{\mu}\frac{\partial \overline{\overline{p^*}}}{\partial x}\right] - \frac{\partial}{\partial x}\left[\frac{k}{\mu}\frac{\partial \overline{\overline{p^*}}}{\partial y}\right] \equiv 0$$

Similar demonstrations may be done for the two other conditions given in Chapter II (II-5.2) . However, a turbulent flow through porous medium cannot have its mean motion defined by a potential function. It is necessarily rotational.

IX-2.6 VELOCITY POTENTIAL FUNCTION

The calculation of a velocity potential function ϕ follows the same rules as for a free flow field of an irrotational motion. However, it should be noted that ϕ normally has a slightly different definition for a flow through a porous medium than that given

in Chapter II. The velocity potential function for a flow through a porous medium is uaually defined by $\overline{\overline{u}} = -K \frac{\partial \phi}{\partial x}$, $\overline{\overline{v}} = -K \frac{\partial \phi}{\partial y}$, $\overline{\overline{w}} = -K \frac{\partial \phi}{\partial z}$, or $\overline{\overline{\vec{V}}} = -K \overrightarrow{\text{grad}}\ \phi$. Substituting these values into the Darcy equations gives:

$$\overline{\overline{u}} = -K \frac{\partial \phi}{\partial x} = -K \frac{\partial}{\partial x} (\overline{\overline{p}} + \rho g z)$$

and two similar equations, from which it is easy to see that ϕ is equal to the piezometric head: $\overline{\overline{p^*}} = (\overline{\overline{p}} + \rho g z) = \phi$. Sometimes ϕ is also defined by: $\left(\frac{\overline{\overline{p}}}{\rho g} + z\right) = \frac{\overline{\overline{p^*}}}{\rho g}$ and $\overline{\overline{u}} = -K \rho g \frac{\partial \phi}{\partial x}$, etc. Fig. IX-5 illustrates the value and the physical meaning of ϕ corresponding to such a definition. The velocity potential function is a constant along the sides of the dike and decreases linearly with z at the free surface inside the dike. Hence, a constant Δz corresponds to a constant value for $\Delta\phi$. This statement will be developed in Sec. XI-6.3.1 on the flow net method.

IX-3 RANGE OF VALIDITY OF THE LAW OF DARCY

It has yet to be seen that the value of the permeability k is a function of the porous medium characteristics alone. This is true only insofar as the Reynolds' number is small.

IX-3.1 REYNOLDS' NUMBER

The Reynolds' number of a flow through a porous medium is defined by $\frac{\overline{\overline{V}}\,\delta}{\nu}$ where V is the mean or specific velocity as pre-

viously defined, and δ the diameter of a grain. The diameter of a grain is easily known while the diameter of the "channels", as used for pipe, would be difficult to define. This process assumes that there is a simple linear relationship between these "channel" diameters and the grain size. However, in a porous medium made of a large grain size distribution, the small particles have a tendency to reduce the size of the "channel". (Fig. IX-6.) The "channels" have the same order of magnitude as the smallest particles. Hence, it is more exact in this case to define the Reynolds' number with the help of the smaller grain sizes. The "characteristic diameter" δ_c may be considered empirically as the average size corresponding to the lowest 10% limit. More accurate considerations on this problem would require further investigation.

IX-3.2 CONVECTIVE INERTIA

Although the velocity in a porous medium is very small, the variation of velocity with respect to space is large. It is easy to recognize this since the actual paths in a porous medium are strongly curved. Hence the convective inertia has an appreciable influence on the motion when the Reynolds' number is greater than one even before the appearance of turbulence. This convective inertia being quadratic, the following so-called law of Forchheimer is more nearly true than Darcy's law.

$$\overrightarrow{\text{grad}}\, \overline{\overline{p^*}} = a\, \overline{\overline{\vec{V}}} + b\, \overline{\overline{\vec{V}}}\, |\overline{\overline{\vec{V}}}|^n$$

where n lies between 0 and 1 .

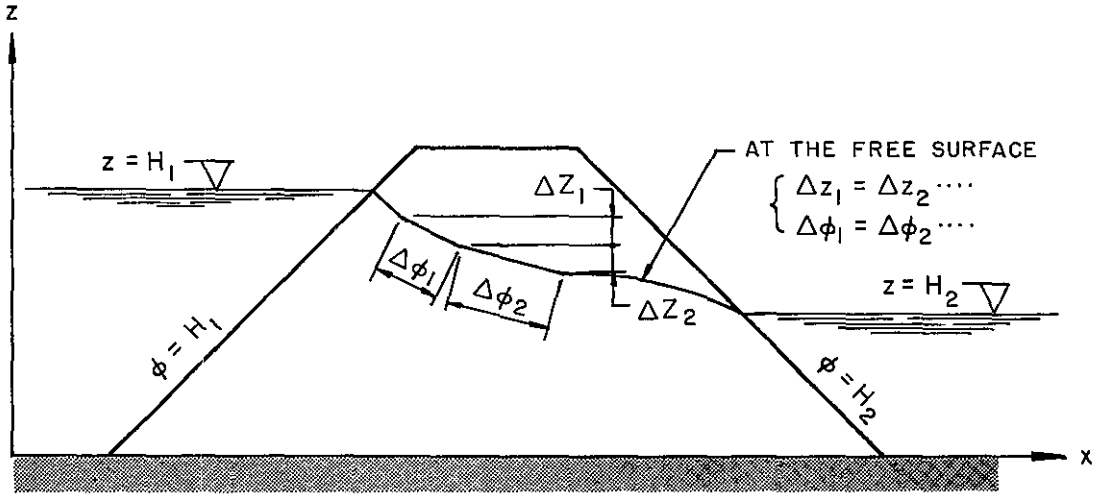

FIGURE IX - 5
VALUE OF THE POTENTIAL FUNCTION FOR A FREE SURFACE FLOW THROUGH POROUS MEDIUM

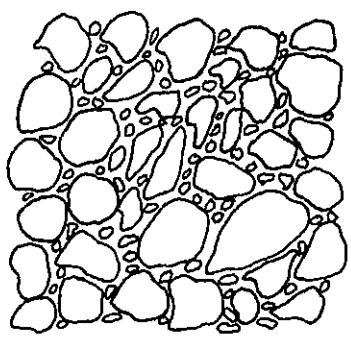

FIGURE IX - 6
THE "CHANNELS" ARE REDUCED BY THE SMALLER PARTICLES

IX-3.3 TURBULENCE IN POROUS MEDIUM

At larger Reynolds' numbers ($R > 100$), the flow becomes turbulent. The above Forchheimer equation may still be applied but the values of the coefficients a and b are changed.

At very large Reynolds' numbers, the linear term $a \vec{\bar{V}}$ becomes negligible, and the coefficient n tends to the value 1 :

$$\overrightarrow{\text{grad}}\ \bar{p}^* = b \vec{\bar{V}} \left| \vec{\bar{V}} \right|$$

Then the coefficient b for the same void coefficient and the same grain size distribution is a function of the roughness of the pebbles. A similar phenomenon has been found in elementary hydraulics with turbulent flow in a rough pipe.

IX-3.4 PERMEABILITY COEFFICIENT

The value of the permeability coefficient is given by dimensional analysis and experimental results. In the general case, it is found to be a function of the Reynolds' number $\frac{V \delta_c}{\nu}$, void coefficient ϵ, and the Froude number $\frac{V^2}{g \delta}$. Many functions have been proposed, too numerous to be compared and analyzed in this book. Some of them are more or less theoretically justified.

For a first order of approximation, the following equation may be used for any kind of flow: laminar or turbulent. This empirical law has been established experimentally for a range of Reynolds' numbers between 10^2 and 10^5.

$$\frac{\Delta H}{\Delta L} = \frac{C_x}{\epsilon^5} \frac{V^2}{2g\,\delta_c} \text{ or } \frac{C_x (1-\epsilon)^2}{\epsilon^3} \frac{V^2}{2g\,\delta_c}$$

where $\frac{\Delta H}{\Delta L}$ is the gradient of pressure $\left(\frac{\Delta H}{\Delta L} = \frac{\mu \overline{\overline{V}}}{k} \right)$ and C_x is the drag coefficient of a rough sphere for the same value of the Reynolds' number (Fig. IX-7) (see Section XIV-5.1). For a laminar motion with a negligible convective inertia ($R < 1$), $C_x = \frac{24}{\overline{\overline{V}}\,\delta_c/\nu}$. Hence the Darcy coefficient is found to be equal to $\frac{\mu}{k} = \frac{12\,\mu}{\rho\, g\, \delta_c^2\, \epsilon^5}$ or $\frac{12\,\mu}{\rho\, g\, \delta_c^2} \frac{(1-\epsilon)^2}{\epsilon^3}$

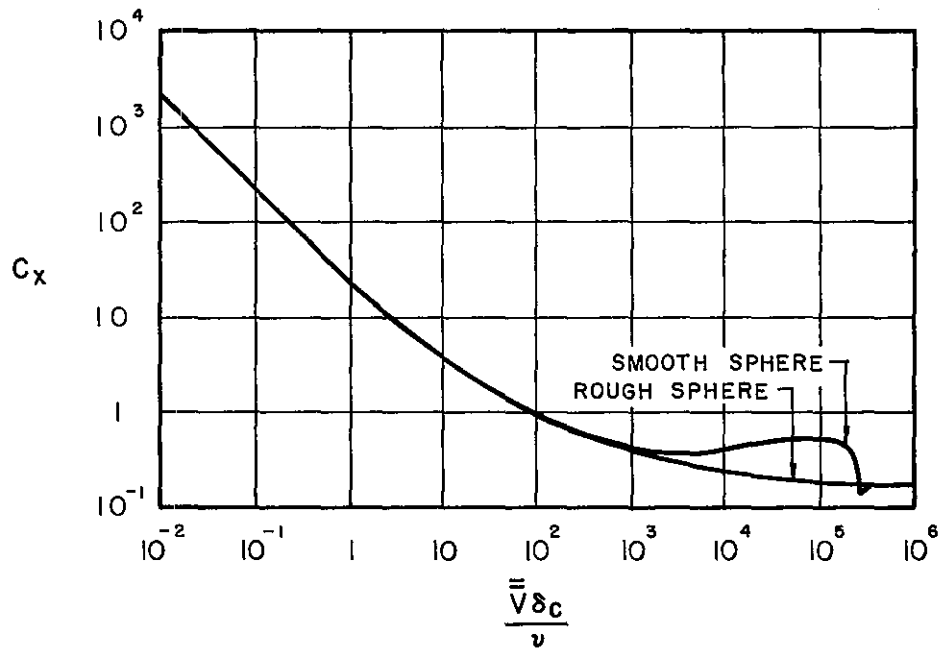

FIGURE IX-7
DRAG OF A ROUGH SPHERE vs. REYNOLDS' NUMBER

IX-1 Calculate the total flow discharge through a porous medium of total cross section $A = 1\ ft^2$ and length in the direction of the flow $\ell = 3$ feet as a function of the head. The significant grain size diameter is $\delta = 0.3$ mm and the void coefficient is $\epsilon = 0.40$. One will also make use of Figure IX-2 for determining the head loss coefficient. Determine the head under which the law of Darcy no longer applies, and the head under which the turbulence appears. Repeat the same calculation when the porous medium is composed of two successive layers: $\ell = 1.5$ feet and $\delta = 0.5$ mm; $\ell = 1.5$ feet and $\delta = 0.1$ mm; and three successive layers of length $\ell = 1$ foot each and $\delta = 0.1$ mm, 0.3 mm, and 0.5 mm respectively, of same void coefficient (kinematic coefficient of viscosity $\nu = 1.076 \times 10^{-5}\ ft^2/sec$).

Answer:

One layer

$$\frac{\Delta H}{\Delta L} = C_x \frac{V^2}{2g\delta} \frac{(1-\epsilon)^2}{\epsilon^3}, \qquad C_x = \frac{24\nu}{V\delta}$$

$$Q = 1.43 \cdot 10^{-2}\ \Delta H \quad ft^3/sec$$

$\Delta H < 0.76$ - the Darcy law is valid

$R > 100$, for turbulence

From Figure IX-7, $C_x = 1$

$\Delta H > 319$ feet for turbulence.

Two layers

$$\Delta H_{total} = \frac{12\nu Q}{gA} \frac{(1-\epsilon)^2}{\epsilon^3} \sum \frac{\Delta\ell}{\delta^2}$$

$$Q = 3.06 \cdot 10^{-3}\ \Delta H$$

$\Delta H < 2.14$ ft - the Darcy law is valid

$\Delta H > 550$ ft for turbulence

Three layers

$Q = 4.15 \cdot 10^{-3} \Delta H$

$\Delta H < 1.58$ ft - the Darcy law is valid

$\Delta H > 424$ ft for turbulence

IX-2 Consider a flow through a porous medium with a cross section $A = 100\ ft^2$ and a length in the direction of the average flow $L = 100$ feet. One wants to build a scale model of this porous medium at a scale $\lambda = 1/10$ such that $a = 1\ ft^2$ and $\ell = 10$ feet, and with the same void coefficient ϵ. One wants the discharge to obey the rule of similitude of Froude, i.e., $q = \lambda^{5/2} Q$ under a head $\Delta h_{model} = \Delta h_{prototype} \times \lambda$. For this purpose the grain size of the model δ_m will be related to the grain size of the prototype δ_p by the relationship $\delta_m = K \lambda \delta_p$. Determine the value of K in the case where $H = 100$ feet, $\delta = 1$ mm, and $\epsilon = 0.40$.

<u>Answer:</u>

$$K = \lambda^{-\frac{3}{4}}$$

SUMMARY OF PART ONE

THE UNKNOWNS TO BE FOUND

To solve a problem in hydraulics, there are two unknowns to be found: the velocity $\vec{V}(u, v, w)$ and the pressure p as a function of space coordinates x, y, z and time t.

However, for turbulent flow, the mean motion with respect to time is dealt with. The two unknowns are $\overline{\vec{V}}(\overline{u}, \overline{v}, \overline{w})$ and $\overline{p}$. The fluctuations of velocity $\vec{V}(u', v', w')$ give rise to some convective inertia forces acting on the mean motion similar to the external forces.

For flow through a porous medium the mean motion with respect to space is dealt with. The two unknowns are $\overline{\overline{\vec{V}}}(u, v, w)$ and $\overline{\overline{p}}$.

In all cases (ideal fluid, laminar flow, turbulent flow, flow through porous medium) the two unknowns -- velocity and pressure, real or mean with respect to time or with respect to space -- are obtained by the continuity relationship and the momentum equation.

THE CONTINUITY EQUATIONS

The continuity relationship has the same mathematical form for four kinds of motion. It is expressed as a function of the real velocity $\vec{V}(u, v, w)$ for an ideal fluid and a laminar flow:

$$\frac{\partial u}{\partial x} + \frac{\partial v}{\partial y} + \frac{\partial w}{\partial z} = 0$$

It is expressed as a function of the mean velocity with respect to time for a turbulent flow:

$$\frac{\partial \bar{u}}{\partial x} + \frac{\partial \bar{v}}{\partial y} + \frac{\partial \bar{w}}{\partial z} = 0$$

It is expressed as a function of the mean velocity with respect to space for a flow through a porous medium:

$$\frac{\partial \bar{\bar{u}}}{\partial x} + \frac{\partial \bar{\bar{v}}}{\partial y} + \frac{\partial \bar{\bar{w}}}{\partial z} = 0$$

THE MOMENTUM EQUATIONS

The momentum equations are written below along the OX axis only for the four cases to be considered.

	Inertia		Pressure Gravity	Viscous Friction	Convective Inertia caused by Turbulence
Perfect fluid Eulerian Equation	$\rho \frac{du}{dt}$	$=$	$- \frac{\partial p^*}{\partial x}$		
Laminar Flow: Navier-Stokes Equations	$\rho \frac{du}{dt}$	$=$	$- \frac{\partial p^*}{\partial x}$	$+ \mu \nabla^2 u$	
Turbulent Flow Reynolds (or Boussinesq) Equations	$\rho \frac{d\bar{u}}{dt}$	$=$	$- \frac{\partial \overline{p^*}}{\partial x}$	$+ \mu \nabla^2 \bar{u}$	$- \rho \left(\frac{\partial \overline{u'^2}}{\partial x} + \frac{\partial \overline{u'v'}}{\partial y} + \frac{\partial \overline{u'w'}}{\partial z} \right)$
Flow Through Porous Medium Darcy's Law when	0	$=$	$- \frac{\partial \overline{\overline{p^*}}}{\partial x}$	$+ \frac{\mu}{k} \bar{\bar{u}}$	

Since similar terms are found in these four equations, similar methods of integration may be used. Some of them are only valid after some approximations or some assumptions have been used to simplify the basic equations. For example, neglecting the turbulent fluctuation terms and the viscous term, a turbulent flow behaves as a perfect fluid.

Hence, in order to simplify the writing and for more generality, only the notation $\vec{V}(u, v, w)$ and p are used in the following chapters since it is understood that V and p means $\bar{V}$ and $\bar{p}$ for turbulent flow and $\bar{\bar{V}}$ and $\bar{\bar{p}}$ respectively for flow through a porous medium.

PART TWO

SOME MATHEMATICAL TREATMENTS OF THE BASIC EQUATIONS

CHAPTER X

BERNOULLI EQUATION

X-1 FORCE AND INERTIA - WORK AND ENERGY

X-1.1 INTEGRATION OF THE MOMENTUM EQUATION IN SOME GENERAL CASES

The laws which govern the motion of a fluid element have been established in the first part of this book. They are given in differential forms.

Integrating the momentum equation along a line or over a mass of fluid gives some general relationships between the two unknowns: the velocity $\vec{V}$ and the pressure p independent of any specific boundary conditions. The purpose of this chapter is to establish these general relationships by integration of the momentum equation.

Before performing these integrations, some elements of mechanics are reviewed in order to ascertain the obtained relationship.

X-1.2 MOMENTUM AND ENERGY IN ELEMENTARY MECHANICS

Consider Newton's second law: force equals mass times acceleration: $\vec{F} = m \frac{d\vec{V}}{dt}$.

Multiplying each term by the length $\vec{dS}$ and inserting $\vec{V} = \frac{\vec{dS}}{dt}$ yields: $\vec{F}.\vec{dS} = m \frac{d\vec{V}}{dt} . \vec{dS} = m\vec{V}.d\vec{V} = m\,d\left(\frac{V^2}{2}\right)$

$\vec{F}\,\vec{dS}$ is the work done by the force $\vec{F}$ acting along $\vec{dS}$, while $md\left(\frac{V^2}{2}\right)$ is the variation in kinetic energy of the mass m caused by the force $\vec{F}$ along the path $\vec{dS}$.

Integrating with respect to dS gives:

$$\int \vec{F}.\ \vec{dS} \quad = \quad m\left(\frac{V_2^2}{2} - \frac{V_1^2}{2}\right)$$

which is an expression equating work and kinetic energy derived directly from an expression equating applied force and inertia.

X-1.3 MOMENTUM AND ENERGY IN HYDRAULICS

Now, consider the momentum equations established in the first part: Euler's equations, Navier-Stokes equations, Reynolds' equations and Darcy's Law. They are all expressions equating forces. If they are multiplied by a distance $\vec{dS}$ and integrated along a distance $\vec{S}$, expressions equating work and energy are obtained.

When the inertia forces are zero or neglibible, as it is in the case of a flow through porous medium, an equality between the work of the applied forces is obtained.

Since these equations are based on an elementary fluid particle of volume equal to unity $(m = \rho)$, the formulas obtained from them will give, as a first step, the relationships between the kinetic energy of an elementary fluid particle and the work of the applied forces acting on the particle.

X-1.4 PROCESSES OF INTEGRATION AND SIMPLIFYING ASSUMPTIONS

In this chapter only the exact integrations in the mathematical sense are performed, but these exact integrations require limitations and simplifying assumptions. First of all, it is assumed that the fluid is perfect. Moreover, the exact integrations without limitation of direction may also be performed for a rotational flow.

These integrations are successively given from the most simple case to the most complex one. The number of simplifying assumptions will be noted although these assumptions are not always satisfied in practice. Approximate integrations are then necessary for practical purposes in order to study, for example, the flow of fluid in a pipe, etc. This subject is dealt with in Chapter XII.

X-2 IRROTATIONAL MOTION IN A PERFECT FLUID

This paragraph deals with cases where an exact integration is possible in any direction; in practice these cases are limited to irrotational motion of an ideal fluid. The following illustrative cases may be studied in the order given from the most simple to the most complex.

X-2.1 SLOW-STEADY AND UNIFORM-STEADY MOTIONS

X-2.1.1 Slow-Steady Motion

Since the motion is steady, the local inertia terms are zero; since the motion is slow, the convective inertia terms may be neglected;

and since the fluid is perfect, the friction forces are zero. Hence, the momentum equation is reduced to an equality of applied forces: pressure and gravity, mathematically expressed as:

$$\frac{\partial p}{\partial x} = 0$$

$$\frac{\partial p}{\partial y} = 0$$

$$\frac{\partial (p + \rho g z)}{\partial z} = 0$$

The axes OX and OY being horizontal, the first two equations show that the pressure is a constant on a horizontal plane, while the third equation gives:

$$p + \rho g z = p^* = \text{constant}$$

It is seen that p varies linearly with the distance from the free surface. The law of hydrostatics is recognized; that is, hydrostatics could be considered as a steady limit case of slow motion of an ideal fluid. However, since friction forces are also zero when there is no motion, the law of hydrostatics is exact, while this same law is only approximate for slow motion.

X-2.1.2 Uniform Steady Flow of a Real Fluid

It is important to note that a similar law is obtained for a uniform steady flow of a real fluid, i.e. with friction forces. Consider a uniform flow in the OX direction with an angle α with the horizontal,

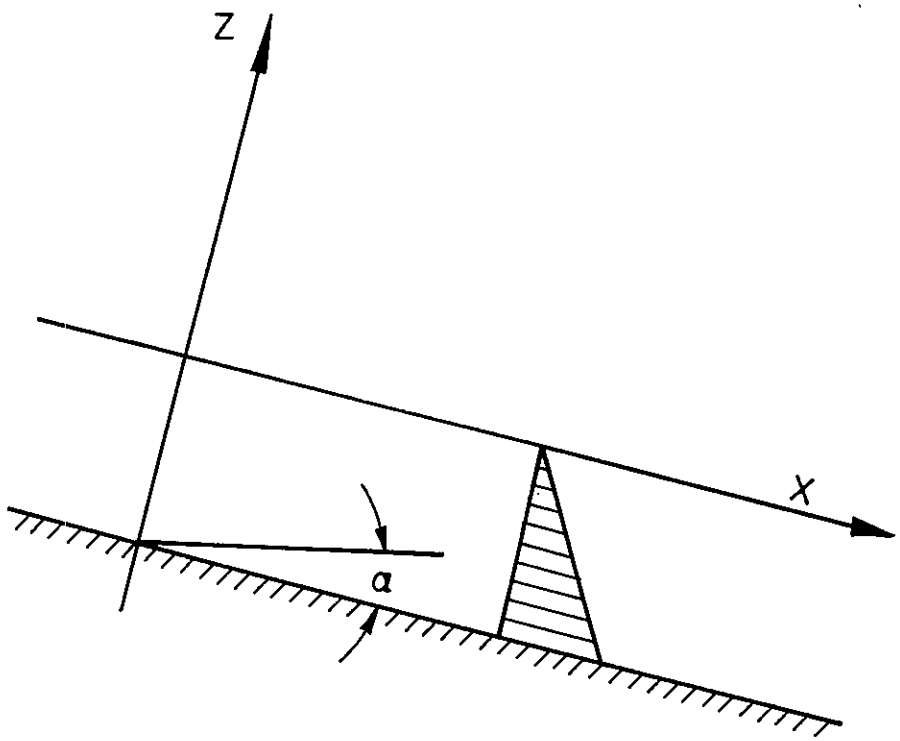

FIGURE X - 1
IN A UNIFORM FLOW, PRESSURE DISTRIBUTION IS HYDROSTATIC AT AN ANGLE

as shown by Fig. X-1 . Since the motion is uniform, $\frac{\partial u}{\partial x} = 0$. Hence, the terms of convective inertia are always zero in a uniform flow; and taking into account the fact that the OZ axis is inclined at an angle α , $\frac{\partial (p + \rho g z \cos \alpha)}{\partial z} = 0$. Integrating, with the system of axes presented in Fig. X-1 where Z is always negative, one obtains

$p = p_a + \rho g z \cos \alpha$ where p_a is the atmospheric pressure.

The isobars or lines of equal pressure are inclined at an angle α with respect to a horizontal plane. It may be deduced from this that the buoyancy exerted on any body in such a flow, such as on a rock deposit on the bottom, is exerted at an angle α with the vertical.

For a number of practical cases of flow with a free surface, α is very small and $\cos \alpha$ may be considered equal to unity. Hence, the pressure distribution in a free surface uniform flow is most often hydrostatic.

This hydrostatics law is considered as accurate enough even for a non-uniform and non-slow motion when the curvature of the paths is small. The calculation of a backwater curve is usually based on such an assumption, even though it is often not specified as such. Fig. X-2 illustrates such a consideration.

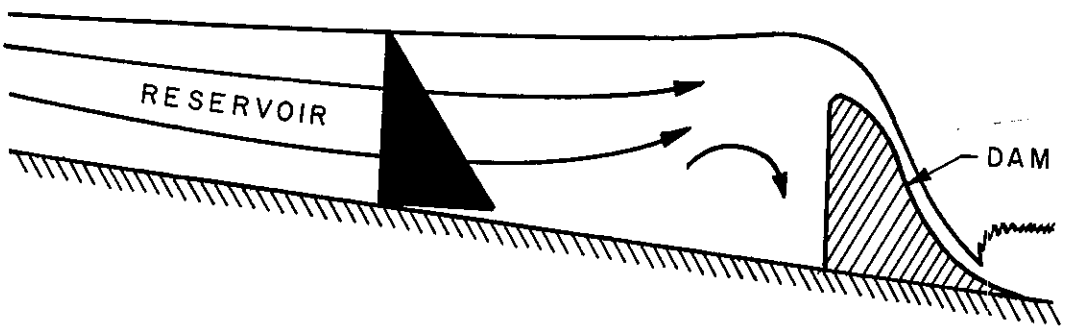

FIGURE X - 2
VELOCITY AND PATH CURVATURE ARE SMALL
HYDROSTATIC PRESSURE DISTRIBUTION

Figs. X-3, X-4 and X-5 illustrate some cases where the convective inertia has a non-negligible influence on the pressure distribution and conversely, the pressure distribution has an influence on the flow pattern. Effect of flow curvature is also studied in Section XVII-2.3.1.

X-2.2 SLOW-UNSTEADY AND UNIFORM-UNSTEADY MOTIONS OF A PERFECT FLUID

X-2.2.1 General Case

Introducing the local inertia terms in the previous equations (X-2.1.1) gives the following equations, valid for the slow unsteady motion of a perfect fluid. They are also valid for non-slow, unsteady, uniform flow of a perfect fluid since in that case the convective inertia terms are also zero, as it will be seen in Chapter XII-2.1.2 .

$$\begin{cases} \rho \dfrac{\partial u}{\partial t} = - \dfrac{\partial p^*}{\partial x} \\[2ex] \rho \dfrac{\partial v}{\partial t} = - \dfrac{\partial p^*}{\partial y} \\[2ex] \rho \dfrac{\partial w}{\partial t} = - \dfrac{\partial p^*}{\partial z} \end{cases}$$

$$\rho \frac{\partial \vec{V}}{\partial t} + \overrightarrow{\text{grad}}\, p^* = 0$$

Now considering that a slow motion may mathematically be irrotational (see Chapter IV-5.2.3), $\vec{V}(u, v, w)$ may be defined by a

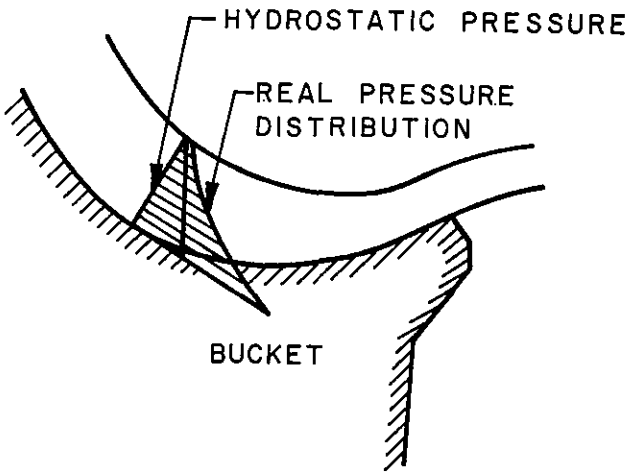

FIGURE X - 3

PRESSURE DISTRIBUTION IS GREATER THAN THAT GIVEN BY HYDROSTATIC LAW

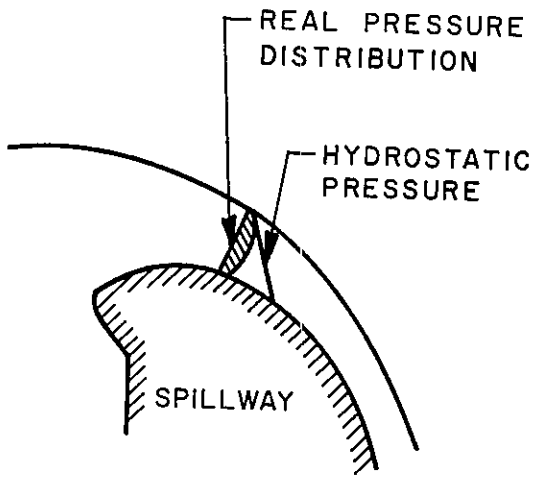

FIGURE X - 4

PRESSURE DISTRIBUTION IS SMALLER THAN THAT GIVEN BY HYDROSTATIC LAW

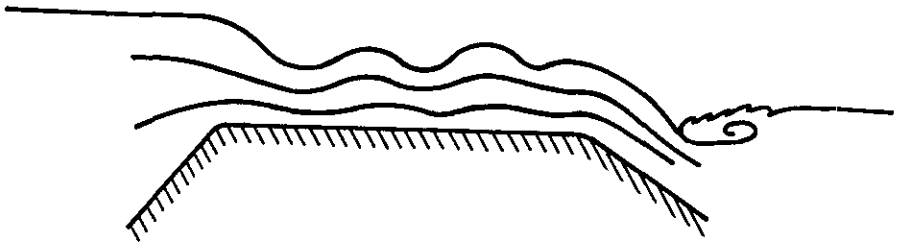

FIGURE X - 5

PATH CURVATURES OVER A BROAD-CRESTED WEIR

velocity potential function ϕ such that:

$$\vec{V} = \overrightarrow{\text{grad}}\ \phi \qquad \begin{cases} u = \dfrac{\partial \phi}{\partial x} \\ v = \dfrac{\partial \phi}{\partial y} \\ w = \dfrac{\partial \phi}{\partial z} \end{cases}$$

The following transformations can be made successively:

$$\frac{\partial u}{\partial t} = \frac{\partial}{\partial t} \frac{\partial \phi}{\partial x} = \frac{\partial}{\partial x} \frac{\partial \phi}{\partial t}$$

and similarly:

$$\frac{\partial v}{\partial t} = \frac{\partial}{\partial y} \frac{\partial \phi}{\partial t}$$

$$\frac{\partial w}{\partial t} = \frac{\partial}{\partial z} \frac{\partial \phi}{\partial t}$$

or

$$\frac{\partial \vec{V}}{\partial t} = \frac{\partial}{\partial t} \overrightarrow{\text{grad}}\ \phi = \overrightarrow{\text{grad}}\ \frac{\partial \phi}{\partial t}$$

Introducing these values in the momentum equations gives:

$$\begin{cases} \dfrac{\partial}{\partial x} \left(\rho \dfrac{\partial \phi}{\partial t} + p^* \right) = 0 \\ \dfrac{\partial}{\partial y} \left(\rho \dfrac{\partial \phi}{\partial t} + p^* \right) = 0 \\ \dfrac{\partial}{\partial z} \left(\rho \dfrac{\partial \phi}{\partial t} + p^* \right) = 0 \end{cases}$$

or

$$\overrightarrow{\text{grad}} \left(\rho \frac{\partial \phi}{\partial t} + p^* \right) = 0$$

Now integrating with respect to distance gives in any direction:

$$\rho \frac{\partial \phi}{\partial t} + p + \rho g z = f(t)$$

The derivative of $f(t)$ with respect to space is zero.

X-2.2.2 <u>The Cauchy Poisson Condition at the Free Surface</u>

At the free surface, defined by $z = \eta$, the pressure p is constant. Hence, including $f(t)$ in $\frac{\partial \phi}{\partial t}$, the Bernoulli equation becomes:

$$\left. \frac{\partial \phi}{\partial t} \right|_{z = \eta} + g\eta = \text{constant}$$

The motion is assumed to be infinitely small, hence $\left. \frac{\partial \phi}{\partial t} \right|_{z = \eta} = \left. \frac{\partial \phi}{\partial t} \right|_{z = 0}$.

Differentiating with respect to t, and since $\frac{\partial z}{\partial t} = w = \frac{\partial \phi}{\partial z}$, where the nonlinear terms are neglected (see XVI-1.4) one obtains:

$$\frac{\partial^2 \phi}{\partial t^2} + g \frac{\partial \phi}{\partial z} = 0$$

This is the Cauchy Poisson condition at the free surface which is fully developed in Section XVII-1.5.

X-2.3 STEADY IRROTATIONAL MOTION OF A PERFECT FLUID

The momentum equations in the OX, OY, OZ directions of steady irrotational motion of a perfect fluid are: (see VI-1.2.3)

$$\begin{cases} \rho \left(\frac{\partial}{\partial x} \frac{V^2}{2} \right) = - \frac{\partial p^*}{\partial x} \\ \rho \left(\frac{\partial}{\partial y} \frac{V^2}{2} \right) = - \frac{\partial p^*}{\partial y} \\ \rho \left(\frac{\partial}{\partial z} \frac{V^2}{2} \right) = - \frac{\partial p^*}{\partial z} \end{cases} \quad \text{or} \quad \begin{cases} \frac{\partial}{\partial x} \left(\rho \frac{V^2}{2} + p^* \right) = 0 \\ \frac{\partial}{\partial y} \left(\rho \frac{V^2}{2} + p^* \right) = 0 \\ \frac{\partial}{\partial z} \left(\rho \frac{V^2}{2} + p^* \right) = 0 \end{cases}$$

which are written vectorially:

$$\rho \ \overrightarrow{\text{grad}} \ \frac{V^2}{2} = - \overrightarrow{\text{grad}} \ p^* \quad \text{or} \quad \overrightarrow{\text{grad}} \left(\rho \frac{V^2}{2} + p^* \right) = 0$$

Integrating these equations with respect to distance yields in any direction:

$$\rho \frac{V^2}{2} + p + \rho g z = \text{constant}$$

or dividing by ρg:

$$\frac{V^2}{2g} + \frac{p}{\varpi} + z = H$$

where H is a constant, the so-called total head: sum of the velocity head $\frac{V^2}{2g}$, the pressure head $\frac{p}{\varpi}$, and the elevation head z. $\frac{p}{\varpi} + z$ is the value given by a piezometer and is called the piezometric head. (See Fig. X-6.)

Finally, this very important result is obtained: the variation with respect to space of the total head H in an irrotational motion is zero: $\overrightarrow{\text{grad}} \ (H) = 0$

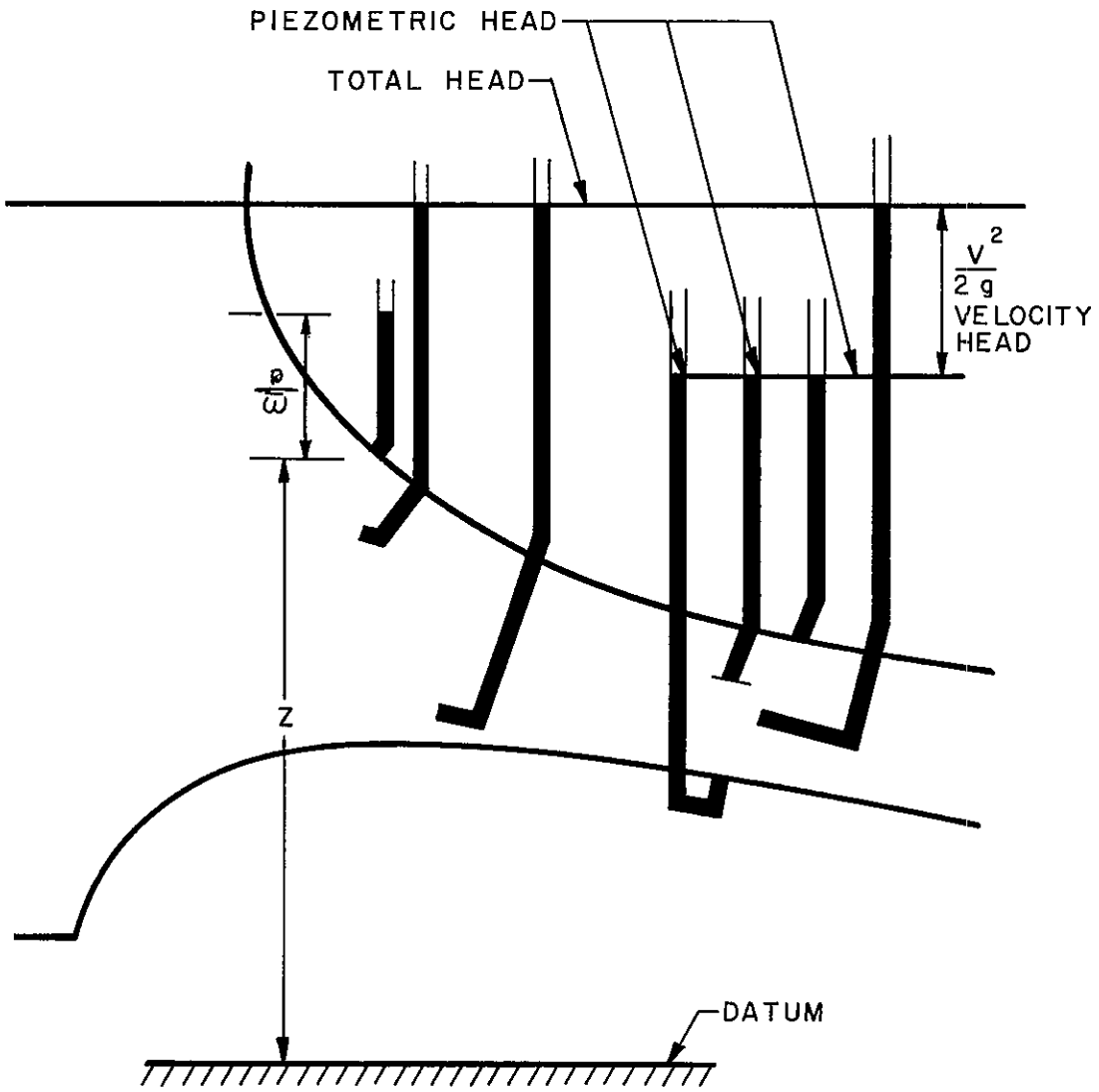

FIGURE X - 6
IN AN IRROTATIONAL FLOW, THE TOTAL HEAD IS A CONSTANT AT ANY POINT

X-2.3.1 The physical meaning of such an equation is well known: it expresses the conservation of energy of an elementary particle of fluid as a sum of its kinetic energy, pressure energy and potential energy. It is emphasized that for an irrotational motion, the Bernoulli equation is valid in any direction: along a path as well as along a normal to a path. It is noticed, also, that the velocity $\vec{V}$ and pressure p refer to the local value of the velocity and do not refer to the mean velocity and mean pressure in a cross section, as will be demonstrated in the generalization of the Bernoulli equation for studying the flow in a pipe. (Chapter XII)

A number of applications based on this formula are made in engineering practice. For example, the calculation of pressure along a boundary may be known by application of this equation when the velocity field is given, for example, by the flow net method. (See Chapter XI-6.) It must be realized that this method may only be applied for an irrotational flow as it is encountered in practice in short, convergent structures. (See Chapter II-4.4.)

X-2.3.2 Expressing $\vec{V}$ as a function of ϕ the Bernoulli equation becomes:

$$\frac{\rho}{2}\left[\left(\frac{\partial\phi}{\partial x}\right)^2+\left(\frac{\partial\phi}{\partial y}\right)^2+\left(\frac{\partial\phi}{\partial z}\right)^2\right] + p + \rho g z = \text{constant}$$

X-2.4 UNSTEADY IRROTATIONAL FLOW OF A PERFECT FLUID

Since the motion is unsteady the local inertia terms have to be introduced in the equations of the preceding case:

$$\begin{cases} \rho \dfrac{\partial u}{\partial t} + \dfrac{\partial}{\partial x}\left(\rho \dfrac{V^2}{2} + p + \rho g z\right) = 0 \\[2ex] \rho \dfrac{\partial v}{\partial t} + \dfrac{\partial}{\partial y}\left(\rho \dfrac{V^2}{2} + p + \rho g z\right) = 0 \\[2ex] \rho \dfrac{\partial w}{\partial t} + \dfrac{\partial}{\partial z}\left(\rho \dfrac{V^2}{2} + p + \rho g z\right) = 0 \end{cases}$$

Introducing the value of V as a function of ϕ according to the same process as that given in paragraph X-2.2.1 leads to the following equalities:

$$\begin{cases} \dfrac{\partial}{\partial x}\left(\rho \dfrac{\partial \phi}{\partial t} + \rho \dfrac{V^2}{2} + p + \rho g z\right) = 0 \\[2ex] \dfrac{\partial}{\partial y}\left(\rho \dfrac{\partial \phi}{\partial t} + \rho \dfrac{V^2}{2} + p + \rho g z\right) = 0 \\[2ex] \dfrac{\partial}{\partial z}\left(\rho \dfrac{\partial \phi}{\partial t} + \rho \dfrac{V^2}{2} + p + \rho g z\right) = 0 \end{cases}$$

or

$$\overrightarrow{\text{grad}}\left(\rho \frac{\partial \phi}{\partial t} + \rho \frac{V^2}{2} + p + \rho g z\right) = 0$$

Integrating them with respect to distance gives in any direction:

$$\rho \frac{\partial \phi}{\partial t} + \rho \frac{V^2}{2} + p + \rho g z = f(t)$$

or expressing V^2 as a function of ϕ :

$$\rho \frac{\partial \phi}{\partial t} + \frac{\rho}{2}\left[\left(\frac{\partial \phi}{\partial x}\right)^2 + \left(\frac{\partial \phi}{\partial y}\right)^2 + \left(\frac{\partial \phi}{\partial z}\right)^2\right] + p + \rho g z = f(t)$$

X-3 ROTATIONAL MOTION OF A PERFECT FLUID

Despite the fact that rotation is physically caused by friction, some rotational motions without friction force are considered in theoretical hydraulics. This case is treated now. This will form a sound basis for studying real rotational flow after generalization involving simplifying assumptions. (See Chapter XII)

It will be seen that in the case of a rotational motion, an exact integration in any direction is impossible. However, an exact integration is possible along a path.

X-3.1 STEADY-ROTATIONAL MOTION OF A PERFECT FLUID

X-3.1.1 Consider first the momentum equations under the Eulerian form where $\frac{d}{dt}$ means total derivative:

$$\rho \frac{du}{dt} = -\frac{\partial p^*}{\partial x}$$

$$\rho \frac{dv}{dt} = -\frac{\partial p^*}{\partial y}$$

$$\rho \frac{dw}{dt} = -\frac{\partial p^*}{\partial z}$$

It is assumed that u, v and w vary with respect to space only. The motion being steady, the partial derivatives $\frac{\partial u}{\partial t}$, $\frac{\partial v}{\partial t}$, $\frac{\partial w}{\partial t}$ are zero.

These three equalities will be multiplied by dx, dy and dz respectively. dx, dy and dz are by definition the components of an element of streamline $\vec{dS}$ (and not any length dx, dy, dz as in X-2) such that:

$$dx = u\,dt$$

$$dy = v\,dt$$

$$dz = w\,dt$$

Then adding them gives:

$$\rho\left(\frac{du}{dt}\,dx + \frac{dv}{dt}\,dy + \frac{dw}{dt}\,dz\right) = -\left(\frac{\partial p^*}{\partial x}\,dx + \frac{\partial p^*}{\partial y}\,dy + \frac{\partial p^*}{\partial z}\,dz\right)$$

Introducing the relationships $u = \frac{dx}{dt}$, $v = \frac{dy}{dt}$, $w = \frac{dz}{dt}$ in the left side leads successively to:

$$(u\,du + v\,dv + w\,dw) = d\left(\frac{u^2 + v^2 + w^2}{2}\right) = d\left(\frac{V^2}{2}\right)$$

On the other hand, the right hand side is the total differential of p^*. Hence, the momentum equation becomes finally:

$$d\;\rho\left(\frac{V^2}{2}\right) = -\,dp^*$$

or

$$d\;\rho\left(\frac{V^2}{2} + p^*\right) = 0$$

that is:

$$\rho\,\frac{V^2}{2} + p + \rho g z = \text{Constant}$$

which is the same equation that was obtained for an irrotational motion. This formula has been obtained without assuming the motion irrotational, but its integration is limited along a streamline because of the insertion of the values dx, dy, and dz as u dt, v dt and w dt respectively.

X-3.1.2 Because of its importance, the case of steady-rotational motion of a perfect fluid is also studied by considering the momentum equation under different forms.

Another demonstration is given here by considering the convective inertia terms under their developed forms. (Only these terms are taken into account in the following, since the demonstrations for p^* are always the same.) The three expressions of convective inertia along the three axes of reference are multiplied by dx, dy, dz respectively:

$$\begin{cases} \rho \left(u \dfrac{\partial u}{\partial x} + v \dfrac{\partial u}{\partial y} + w \dfrac{\partial u}{\partial z} \right) dx \\ \rho \left(u \dfrac{\partial v}{\partial x} + v \dfrac{\partial v}{\partial y} + w \dfrac{\partial v}{\partial z} \right) dy \\ \rho \left(u \dfrac{\partial w}{\partial x} + v \dfrac{\partial w}{\partial y} + w \dfrac{\partial w}{\partial z} \right) dz \end{cases}$$

Since dx, dy, dz are the components of streamline $\vec{dS}$, the streamline equations $\frac{dx}{u} = \frac{dy}{v} = \frac{dz}{w} = dt$ (see Chapter I-2.4) give the following equalities:

$$v\,dx = u\,dy\,, \quad w\,dx = u\,dz\,, \quad w\,dy = v\,dz$$

Introducing these equalities and adding the three above expressions leads successively to:

$$\rho\left(u\frac{\partial u}{\partial x}dx + u\frac{\partial u}{\partial y}dy + u\frac{\partial u}{\partial z}dz\right) + \rho\left(v\frac{\partial v}{\partial x}dx + v\frac{\partial v}{\partial y}dy + v\frac{\partial v}{\partial z}dz\right) +$$

$$\rho\left(w\frac{\partial w}{\partial x}dx + w\frac{\partial w}{\partial y}dy + w\frac{\partial w}{\partial z}dz\right) =$$

$$\rho\,(u\,du + v\,dv + w\,dw) = d\;\rho\left(\frac{V^2}{2}\right)$$

The result of this demonstration is the very same as that given in Section X-3.1.1.

X-3.1.3 A similar process of integration may be done from the following form where the rotational terms ζ, η, ξ appear:

$$\rho\left[\frac{\partial}{\partial x}\left(\frac{V^2}{2}\right) + 2(\eta w - \zeta v)\right]dx$$

$$\rho\left[\frac{\partial}{\partial y}\left(\frac{V^2}{2}\right) + 2(\zeta u - \xi w)\right]dy$$

$$\rho\left[\frac{\partial}{\partial z}\left(\frac{V^2}{2}\right) + 2(\xi v - \eta u)\right]dz$$

The term $\rho\frac{V^2}{2}$ is directly obtained from the components $\rho\frac{\partial}{\partial x}\left(\frac{V^2}{2}\right)dx$, $\rho\frac{\partial}{\partial y}\left(\frac{V^2}{2}\right)dy$, $\rho\frac{\partial}{\partial z}\left(\frac{V^2}{2}\right)dz$, while the terms where ζ, η, ξ appear are canceled out by the introduction of the relationships $v\,dx = u\,dy$, $w\,dx = u\,dz$, $w\,dy = v\,dz$ valid along a streamline. It must be noted that these rotational terms disappear along a streamline despite the fact that ζ, η, ξ are different from zero as was the case in X-2.3.

X-3.1.4 Since $\rho \frac{V^2}{2} + p + \rho g z$ = Constant along a streamline $dS(dx, dy, dz)$, the total variation of the total head $H = \frac{V^2}{2} + \frac{p}{\omega} + z$ along this path is zero:

$$\frac{\partial}{\partial S}\left(\frac{V^2}{2g} + \frac{p}{\omega} + z\right) = 0$$

or

$$\frac{\partial H}{\partial S} = 0$$

In a steady flow, if $\frac{\partial H}{\partial S}$ is positive, it is because of the action along the path dS of an external force such as a pump. It $\frac{\partial H}{\partial S}$ is negative, it is either because of the action along the path dS of an external force, such as a turbine, or because of friction force.

The variation in H along S measures, dimensionally in terms of length, the action of turbo machines or the head losses.

X-3.1.5 It is important to notice that in a rotational flow H varies from one streamline to another streamline, while H is the same for any streamline of an irrotational flow. Fig. X-7 illustrates such a result.

X-3.2 PRESSURE DISTRIBUTION IN A DIRECTION PERPENDICULAR TO THE STREAMLINES

X-3.2.1 In an irrotational flow, the variation of p is known in any direction by applying the Bernoulli equation to the velocity field.

In a rotational flow, the Bernoulli equation gives the variation of p along a streamline as a function of the variation of $\vec{V}$, but does

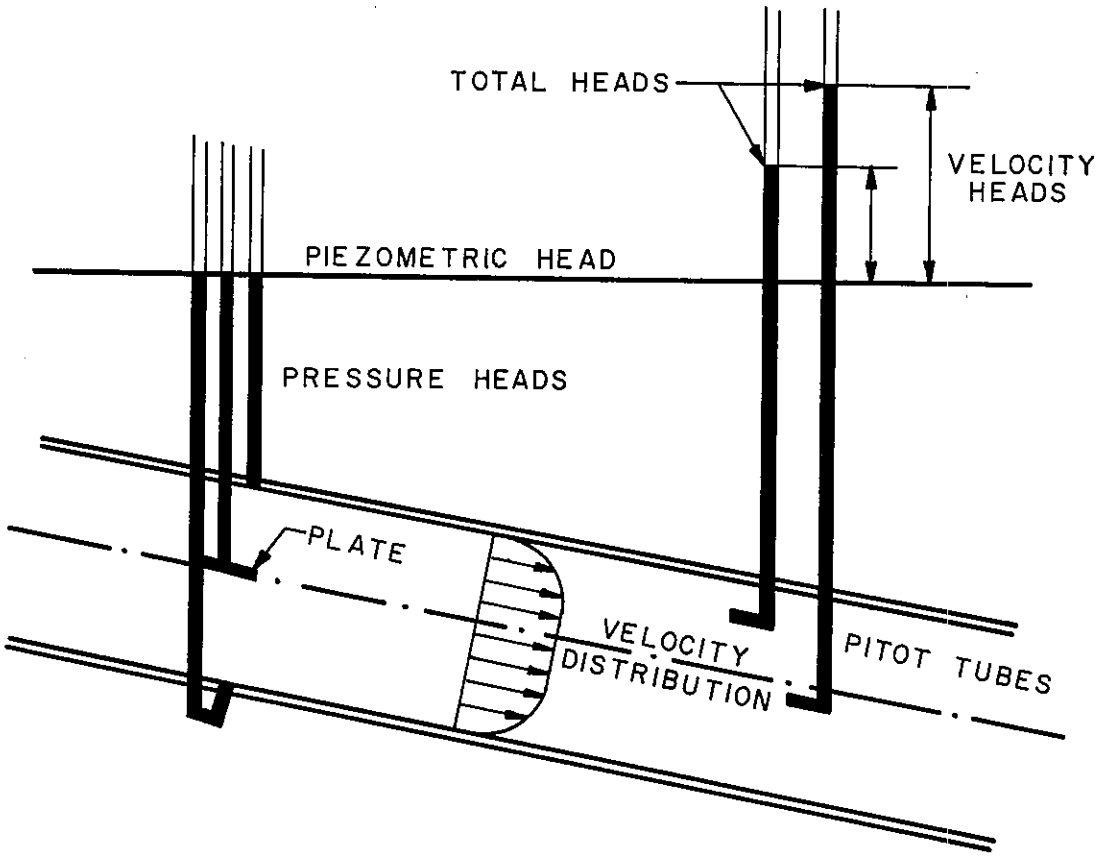

FIGURE X - 7
IN A ROTATIONAL FLOW, THE TOTAL HEAD CHANGES FROM ONE STREAMLINE TO ANOTHER

not give any indication of the variation of p in a direction perpendicular to the streamlines. However, both of these are of equal importance in engineering practice.

It has been seen that the pressure distribution in a uniform flow is hydrostatic. (See Chapter X-2.1.2.) This hydrostatic law is again valid when the path curvature is small.

X-3.2.2 Now the general case of non-negligible curvature is studied. Consider an infinitely small, curved, two-dimensional stream tube as shown by Fig. X-8, and an elementary mass of fluid ρ dR dS in this stream tube.

Since the motion is in the direction of the stream tube, this elementary mass is in equilibrium in a direction normal to the stream-

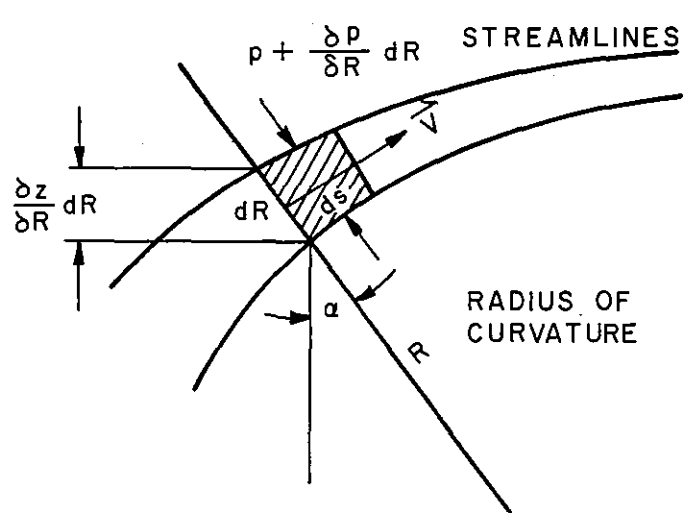

FIGURE X - 8
NOTATION

line, under the action of its inertia and applied forces.

Its inertia gives rise to a centrifugal force equal to $\rho \, dR \, dS \, \frac{V^2}{R}$ where R is the radius of curvature of the streamlines. The applied forces are the difference of pressure forces acting on the two streamlines:

$$\left(p + \frac{\partial p}{\partial R} dR\right) dS - p \, dS = \frac{\partial p}{\partial R} dR \, dS$$

and the gravity:

$$\rho g \, dR \, dS \quad \cos \alpha$$

Introducing

$$\cos \alpha = \frac{\frac{\partial z}{\partial R} dR}{dR} = \frac{\partial z}{\partial R}$$

and equating and dividing by the volume dR dS leads to:

$$\rho \frac{V^2}{R} = \frac{\partial (p + \rho g z)}{\partial R}$$

or

$$\rho \frac{V^2}{R} = \frac{\partial p^*}{\partial R}$$

or also:

$$\frac{V^2}{g R} = \frac{\partial \frac{p^*}{\varpi}}{\partial R}$$

or again

$$\frac{\partial}{\partial R} \left(\frac{V^2}{g} \ln R - \frac{p^*}{\varpi} \right) = 0 \, .$$

Integrating this equation along dR permits the calculation of the pressure distribution from the velocity fields along a curved boundary, as on a bucket of a spillway, for example.

If R tends to infinity, $\frac{\partial \frac{p^*}{\omega}}{\partial R}$ tends to zero and $p^* =$ constant as has been found in the case of uniform flow. (See Chapter X-2.1.2)

X-3.2.3 The above demonstration does not require the assumption that the flow is irrotational. Hence, it is valid for an irrotational flow as well as for a rotational flow. It has been seen that the pressure distribution in an irrotational flow is also known by the Bernoulli equation which is valid for any direction, and in particular in a direction perpendicular to the streamlines. So two methods exist for calculating the variation of the pressure distribution in a direction perpendicular to the streamlines for an irrotational flow. It is evident that the same result must be obtained. This could be demonstrated by combining the above formula with a condition of irrotationality.

The simplest demonstration is that the variation of total head $H = \frac{V^2}{2g} + \frac{p^*}{\omega}$ along the radius of curvature R is zero; i.e. $\frac{\partial H}{\partial R} = 0$.

Introducing the relationship demonstrated in the previous section, one has successively:

$$\frac{\partial H}{\partial R} = \frac{V}{g}\frac{\partial V}{\partial R} + \frac{\partial \frac{p^*}{\omega}}{\partial R} = \frac{V}{g}\left(\frac{\partial V}{\partial R} + \frac{V}{R}\right)$$

In an irrotational flow $VR = \text{constant}$; $VdR + RdV = 0$. Hence, $\frac{\partial V}{\partial R} + \frac{V}{R} = 0$, that is $\frac{\partial H}{\partial R} = 0$ which means that the constant H is the same for any streamlines of an irrotational flow, as previously shown. (See Chapter X-2.3.)

X-3.3 UNSTEADY-ROTATIONAL MOTION OF A PERFECT FLUID

Introducing the local inertia terms, multiplying the three momentum equations by dx, dy, dz respectively, adding them and integrating them along a streamline following the same process as given for a steady motion (see X-3.1.1) leads to:

$$\rho \frac{V^2}{2} + p + \rho g z + \rho \int \left(\frac{\partial u}{\partial t} dx + \frac{\partial v}{\partial t} dy + \frac{\partial w}{\partial t} dz \right) = \text{constant}$$

or

$$\rho \frac{V^2}{2} + p + \rho g z + \rho \int \frac{\partial V}{\partial t} dS = \text{constant}$$

that is:

$$\rho \frac{\partial V}{\partial t} + \frac{\partial}{\partial S} \left(\rho \frac{V^2}{2} + p + \rho g z \right) = 0$$

and dividing by ρg:

$$\frac{1}{g} \frac{\partial V}{\partial t} + \frac{\partial H}{\partial S} = 0$$

This last expression is smaller than zero when friction forces are taken into account.

X-4 RÉSUMÉ AND NOTEWORTHY FORMULAS

This chapter dealt with a perfect fluid. According to this assumption the following formulas have been found:

Hydrostatics Steady slow motion	$p^* = p + \rho g z = Cst$
Steady uniform flow (real fluid). OZ at an angle α with the vertical.	$p + \rho g z \cos \alpha = Cst$
Unsteady slow motion	$\rho \frac{\partial \phi}{\partial t} + p^* = f(t)$
Free surface condition for unsteady slow motion	$\frac{\partial^2 \phi}{\partial t^2} + g \frac{\partial \phi}{\partial z} = 0$
Steady irrotational flow	$H = \frac{V^2}{2g} + \frac{p}{\omega} + z = Cst$
Unsteady irrotational motion	$\frac{1}{g} \frac{\partial \phi}{\partial t} + \frac{V^2}{2g} + \frac{p}{\omega} + z = f(t)$
Steady rotational flow	$\frac{\partial}{\partial S} \left(\frac{V^2}{2g} + \frac{p}{\omega} + z \right) = 0$
Steady flow (rotational or irrotational	$\frac{V^2}{gR} = \frac{\partial}{\partial R} \left(\frac{p}{\omega} + z \right)$
Unsteady rotational flow	$\frac{\partial}{\partial S} \left(\frac{V^2}{2g} + \frac{p}{\omega} + z \right) + \frac{1}{g} \frac{\partial V}{\partial t} = 0$

All these formulas have been obtained by exact integration. Unfortunately, only the formulas obtained in the case where the motion is assumed to be irrotational may be applied in engineering practice. The integration in the case of a rotational motion is valid only along an infinitely small stream tube which is a streamline. To be able to use these formulas in practice, they must be integrated to a cross section. This is the subject of Chapter XII, which is entitled, "Generalization of the Bernoulli Equation".

X-1 The velocity around the limit of a circular cylinder is given by the equation:

$$V = 2\,U \sin\theta$$

where U is the velocity at distance infinity, and where the pressure is p_∞. Determine the pressure distribution around the dylinder.

Answer:

$$p - p_\infty = \frac{1}{2}\rho U^2 \left[1 - 4\sin^2\theta\right]$$

X-2 Demonstrate the following equality valid for steady flow:

$$2\,(w\eta - v\zeta) = -\frac{\partial}{\partial x}\left[\frac{V^2}{2} + \frac{p}{\rho} + g\,z\right]$$

and two other similar relationships obtained by circular permutations.

Answer:

$$2\,(u\zeta - w\xi) = -\frac{\partial}{\partial y}\left[\frac{V^2}{2} + \frac{p}{\rho}\,g\,z\right]$$

$$2\,(v\xi - u\eta) = -\frac{\partial}{\partial z}\left[\frac{V^2}{2} + \frac{p}{\rho}\,g\,z\right]$$

X-3 The velocity potential function for a flow past a sphere of

radius R is

$$\phi = U \left(\frac{R^3}{2\, r^2} + r \right) \cos \theta$$

Determine the velocity and pressure distribution around the sphere.

$$v_r = \frac{\partial \phi}{\partial r}, \qquad v_\theta = \frac{1}{r} \frac{\partial \phi}{\partial \theta}$$

In view of the results, explain the shape that a drop of rain will take, and explain why, by considering the capillary action, there is a maximum critical size which can never be exceeded.

<u>Answer:</u>

$$v_r = 0, \qquad v_\theta = -1.5\, U \sin \theta,$$

$$p - p_\infty = \frac{1}{2} \rho U^2 \left[1 - \frac{9}{4} \sin^2 \theta \right]$$

X-4 A wave filter is composed of wire mesh dropped into the fluid flow. Such a filter creates negligible flow disturbances. However, it introduces an internal friction force F proportional to the average velocity such that $\vec{F} = -K\vec{V}$. The flow motion will be considered as irrotational. Establish the free surface condition which should be used instead of the Cauchy-Poisson condition for the free surface in the case where the void coefficient of the filter is unity (i.e., practically immaterial) and in the case where it has a finite value ϵ.

Answer:

$$V = \text{grad}\,\phi$$

$$\frac{1}{\epsilon}\frac{d\vec{V}}{dt} + \text{grad}\left[\frac{p}{\rho} + g z\right] + K\vec{V} = 0$$

Linearizing:

$$\text{grad}\left[\frac{1}{\epsilon}\frac{\partial\phi}{\partial t} + \frac{p}{\rho} + g z + K\phi\right] = 0$$

At the free surface where $z = \eta$,

$$\frac{\partial\eta}{\partial t} = \frac{1}{\epsilon}\frac{\partial\phi}{\partial z}$$

$$\frac{1}{\epsilon}\frac{\partial^2\phi}{\partial t^2} + \frac{g}{\epsilon}\frac{\partial\phi}{\partial z} + K\frac{\partial\phi}{\partial t} = 0$$

CHAPTER XI

FLOW PATTERN

STREAM FUNCTION - POTENTIAL FUNCTION

XI-1 GENERAL CONSIDERATIONS ON THE DETERMINATION OF FLOW PATTERN

The laws which govern the motion of an infinitely small particle of fluid have been established in Part One (Chapters II to IX). Then some general relationships between velocity and pressure and gravity, such as that given by the Bernoulli equation, have been deduced by general exact integration, independent of the boundary conditions (Chapter X). It has been seen that this integrating process has transformed an equality between momentum-force into an equality between energy-work. The pressure p (or velocity $\vec{V}$) may be determined from these general relationships after insertion of the value $\vec{V}$ (or p).

Also, the differential equations derived from the continuity principle and momentum equation allow us to theoretically solve directly any particular problem, that is, to determine the velocity $\vec{V}$ (or pressure p) when the boundary conditions are introduced. These boundary conditions define the particular case to be considered. An example of this is given in Chapter VI-2, Laminar Flow on an Inclined Plane.

However, the boundary conditions are usually too complicated in the majority of cases encountered in engineering practice and, as

previously pointed out, it is also evident that a general solution of the continuity relationship and Navier-Stokes equation does not exist.

Hence, the use of the mathematical theory is limited to over-simplified cases. However, a number of practical problems closely approximate some simple cases which can be submitted to mathematical analysis. This could be performed after a choice of schematic boundary conditions, which may be mathematically expressed in simple form.

The purpose of this chapter is to study some of these exact mathematical methods. Moreover, a number of approximate methods - graphical, numerical or experimental - are based on the same mathematical principles as those which are explained in this chapter. The approximate methods extend the field of application of the exact methods considerably and take into account cases in which the boundary conditions are not so simple. The well-known graphical flow net method is one of these approximate methods.

It is intended that the word "exact" refer to the mathematical process. The physical exactness will depend upon the limit of validity of the basic assumptions necessary to use such methods.

It has already been indicated that the two unknowns to be determined are the velocity $\vec{V}$ and the pressure p and that theoretically, both of them may be found directly from the momentum equation and continuity relationship. However, in many cases the methods under study provide a knowledge of the relative velocity distribution from the velocity field calculated from the continuity principle and an assumption such as that of irrotationality.

To calculate the absolute value of the velocity requires a second step. This second step is simple when the absolute value of the velocity at one point or at one boundary is known.

Then, in a third step, the pressure distribution is determined by application of some of the relationships between $\vec{V}$ and p which have been established in Chapter X, such as the Bernoulli equation.

This chapter deals with the problem of the determination of the velocity field by some analytical methods of particular importance. These analytical methods are based on the use of two mathematical tools which allow a concise description of the complete flow pattern. They are: the stream function and the velocity potential function.

XI-2 STREAM FUNCTION

XI-2.1 DEFINITION

The stream function is a mathematical device to concisely describe a flow pattern by its streamlines.

The stream function may be used to calculate any kind of flow of incompressible fluid: rotational or irrotational, steady or unsteady, two-dimensional or three dimensional; laminar or turbulent, slow or non-slow motion. However, in the case of turbulent motion, the streamlines are intended to define only the mean motion with respect to time, i.e. the mean velocity vector $\vec{\bar{V}}$. It may also be used to define the mean motion with respect to space of a flow through porous medium whatever the value of the Reynolds' number, i.e. for turbulent flow as well as for laminar flow.

Although the stream function may theoretically be defined and used for three-dimensional motion, its calculation is complex and its use has been limited. Hence, in practice the stream function is mainly used in two-dimensional flow and only this case is analyzed in this book.

The stream function may be defined by any one of its characteristics and then the other characteristics may be deduced from this chosen definition. As was done for the velocity potential function, the stream function will be defined first by the velocity components.

XI-2.2 STREAM FUNCTION AND CONTINUITY

The stream function is a natural outcome from the continuity relationship: $\frac{\partial u}{\partial x} + \frac{\partial v}{\partial y} = 0$. Indeed, consider a function $\psi(x, y, t) =$ constant such that $u = \frac{\partial \psi}{\partial y}$, $v = -\frac{\partial \psi}{\partial x}$.

From the continuity relationship given above, it follows that in any case $\frac{\partial}{\partial x}\frac{\partial \psi}{\partial y} - \frac{\partial}{\partial y}\frac{\partial \psi}{\partial x} = 0$ which shows that ψ always satisfies the principle of continuity; in other words, the existence of ψ implies that the continuity relationship is satisifed and conversely the continuity equation implies the existence of a stream function.

XI-2.3 STREAM FUNCTION, STREAMLINES AND DISCHARGE

Now it is shown that such a function $\psi = cst$ is not only the equation of one streamline but of any streamline of the considered flow. This is performed by a simple change of the constant value for ψ .

For this purpose, consider the streamline equation $\frac{dx}{u} = \frac{dy}{v}$ (see I-2.3) which may be written $u\,dy - v\,dx = 0$. Introducing the

value of u and v as functions of ψ yields the equation of streamlines in terms of stream function:

$$\frac{\partial\psi}{\partial x}\,dx + \frac{\partial\psi}{\partial y}\,dy = 0$$

It is the total differential $d\psi$ (with respect to distance) of $\psi(x, y, t)$. Hence, the equation of any streamline expressed as a function of ψ is given by the equation $d\psi = 0$, or in the case of steady flow $\psi(x, y) =$ constant, and in the case of unsteady flow $\psi(x, y, t_o) =$ constant.

Changing the value of the constant gives different streamlines of the considered flow, but the function $\psi(x, y)$ keeps the same analytical form. It is for this reason that ψ is called a stream function.

Consider the flow pattern as shown by Fig. XI-1. The discharge dQ passing through an element dn perpendicular to the streamlines is:

$$dQ = \frac{\partial\psi}{\partial y}\,dy + \frac{\partial\psi}{\partial x}\,dx = d\psi$$

which is also the total differential of $\partial\psi$ with respect to distance.

It is deduced that $V = \frac{dQ}{dn} = \frac{d\psi}{dn}$.

The total discharge between two streamlines $\psi_1(x, y) = K_1$ and $\psi_2(x, y) = K_2$ is given by an integration between A and B of dQ; i.e.

$$\int_{AB} dQ = \int_{AB} d\psi = \psi_2 - \psi_1 = \Delta\psi$$

The total discharge between two streamlines ψ_1 and ψ_2 is given by their difference.

The average value of V between A and B is:

$$V = \frac{\Delta\psi}{\Delta n} = \frac{\Delta\psi}{AB}$$

XI-2.4 AN EXAMPLE OF STREAM FUNCTION - UNIFORM FLOW

In this section, it is verified that the stream function of a uniform flow may take the form: (Fig. XI-2)

$$\psi = Ay - Bx$$

The velocity components are:

$$u = \frac{\partial\psi}{\partial y} = A \qquad\qquad v = -\frac{\partial\psi}{\partial x} = B$$

and $V = \sqrt{A^2 + B^2}$. V does not depend upon x and y , hence the flow is uniform.

The streamlines are defined by the equation:

$$Ay - Bx = K$$

They are straight lines of slope: $\frac{y}{x} = \frac{B}{A}$ and are obtained by giving K various constant values. The discharge between two streamlines is given by the difference between the corresponding values of the constant K.

XI-2.5 STREAM FUNCTION AND ROTATION

The rate of rotation is: (see Chapter II) $2\zeta = \frac{\partial u}{\partial y} - \frac{\partial v}{\partial x}$

Expressed as a function of ψ , the rate of rotation becomes successively:

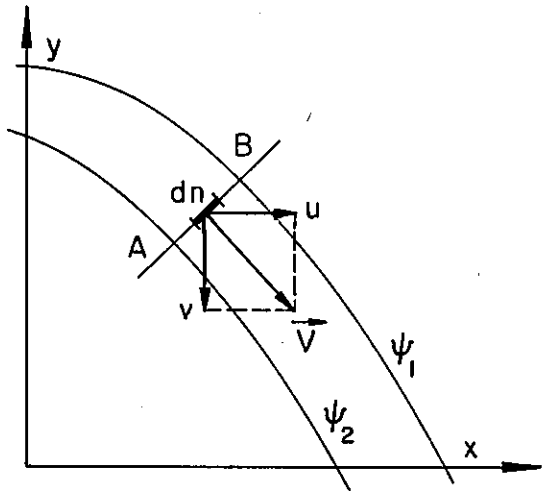

FIGURE XI-1
DISCHARGE IN TERMS OF STREAM FUNCTION - NOTATION

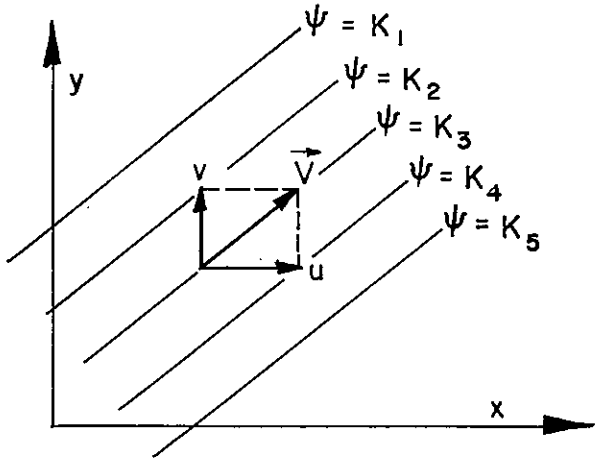

FIGURE XI-2
UNIFORM FLOW DEFINED BY A STREAM FUNCTION

$$2\zeta = \frac{\partial}{\partial y}\frac{\partial \psi}{\partial y} - \frac{\partial}{\partial x}\left(-\frac{\partial \psi}{\partial x}\right) = \frac{\partial^2 \psi}{\partial y^2} + \frac{\partial^2 \psi}{\partial x^2}$$

that is:

$$2\zeta = \nabla^2 \psi$$

Hence, an irrotational motion for which $\zeta = 0$ is defined by a stream function ψ which is a solution of the Laplace equation $\nabla^2 \psi = 0$. In other words, $\nabla^2 \psi = 0$ defines an irrotational motion which satisfies the continuity principle. It may be easily verified that the example of uniform flow defined by a stream function given in XI-2.4 is irrotational.

XI-2.6 GENERAL REMARKS ON THE USE OF THE STREAM FUNCTION

The stream function may be used to calculate the flow pattern from the basic equations -- continuity relationship and momentum equation -- by introducing the value of u and v as a function of ψ. In this case, it must be noted that the problem exists in finding only one unknown: ψ instead of two: u and v, but it should be expected that because of its own definition, the order of the basic differential equation increases by one degree.

For example, consider the equations which are used to study the boundary layer theory as they have been established in Chapters IV-5.2.4 and V-4.3.

Continuity: $$\frac{\partial u}{\partial x} + \frac{\partial v}{\partial y} = 0$$

Momentum: $$u\frac{\partial u}{\partial x} + v\frac{\partial u}{\partial y} = \nu\frac{\partial^2 u}{\partial y^2}$$

The first equation allows definition of ψ as:

$$u = \frac{\partial \psi}{\partial y} \qquad \text{and} \qquad v = -\frac{\partial \psi}{\partial x}$$

Then introducing these values in the momentum equation yields:

$$\frac{\partial \psi}{\partial y} \frac{\partial^2 \psi}{\partial x \, \partial y} - \frac{\partial \psi}{\partial x} \frac{\partial^2 \psi}{\partial y^2} = \nu \frac{\partial^3 \psi}{\partial y^3}$$

which involves the calculation of only one unknown ψ but the equation is now of the third order instead of a second order as it was when the motion was expressed by the two velocity components of u and v. In a word, the stream function permits the transformation of a system of two equations with two unknowns u and v into one equation of higher order with only one unknown.

Introducing the boundary conditions, this equation gives the theoretical value of ψ after successive integrations from which u and v are afterwards obtained by simple differentiation.

XI-3 VELOCITY POTENTIAL FUNCTION

XI-3.1 ITS USE

The velocity potential function has been defined in Chapter II-5.3. Similar to the stream function, the velocity potential function is a mathematical device to concisely describe a flow pattern.

The velocity potential function may be used for any kind of irrotational flow: steady or unsteady, two-dimensional or three dimensional. It may be used to study turbulent motion, provided the velocity

potential function refers to the mean motion with respect to time, and the turbulence is almost isotropic. In practice, outside the boundary layer turbulent flow has a mean motion which could often be considered as irrotational (see VIII-2.2).

It may also be used to study a flow through porous medium provided it refers to the mean motion with respect to space, and that the Reynolds number is smaller than 1 (see IX-2.6).

Except in this last case, it may be used only when friction effects are negligible, and in short convergent structures. When used for the divergent part of a flow, it must be realized that convective inertia forces often cause separation and wakes and that the velocity potential function has a limit of applicability. If the surface of separation of wakes is known, the flow out of stagnant zones may also be defined by a potential function provided the friction effects are negligible, as they are in the convergent part of the flow.

XI-3.2 DEFINITION

It is to be recalled that the velocity potential function is defined as a function of (x, y, z, t) such that when differentiated with respect to space in any direction, it yields the velocity in that direction. For example, for one direction S the velocity in that direction $\vec{V}$ is such that $\vec{V} = \left(\overrightarrow{\frac{\partial\phi}{\partial S}}\right)$ or $d\phi = \vec{V}.\vec{dS}$.

Particularly along the reference axes OX, OY and OZ, ϕ is defined by the following equalities:

$$u = \frac{\partial\phi}{\partial x} \qquad v = \frac{\partial\phi}{\partial y} \qquad w = \frac{\partial\phi}{\partial z}$$

XI-3.3 VELOCITY POTENTIAL FUNCTION AND ROTATION

It has been stated that the velocity potential function exists only in the case of irrotational flow. The condition for a two-dimensional motion to be irrotational was shown to be: (see II-4.1)

$$2\zeta = \frac{\partial u}{\partial y} - \frac{\partial v}{\partial x} = 0$$

Expressing this as a function of ϕ results in:

$$\frac{\partial}{\partial y}\frac{\partial \phi}{\partial x} - \frac{\partial}{\partial x}\frac{\partial \phi}{\partial y} = 0$$

This relationship is an identity and shows that ϕ always satisfies the condition for an irrotational flow; in other words, the existence of ϕ implies that the flow is irrotational. A similar demonstration could be made in the case of a three-dimensional motion.

It is interesting to note the following parallel:
The velocity potential function is a natural mathematical outcome from the assumption that the motion is irrotational $\frac{\partial u}{\partial y} - \frac{\partial v}{\partial x} = 0$ just as the stream function is a natural mathematical outcome from the continuity relationship $\frac{\partial u}{\partial x} + \frac{\partial v}{\partial y} = 0$.

XI-3.4 EQUIPOTENTIAL LINES AND EQUIPOTENTIAL SURFACE

By definition an equipotential line in a two-dimensional motion and an equipotential surface in a three-dimensional motion are defined by the fact that ϕ keeps a constant value at any point of this line or of this surface:

$$\phi(x, y, z) = \text{constant} = K$$

or

$$\phi(x, y, z, t_o) = \text{constant} = K$$

That is:

$$\frac{\partial\phi}{\partial x} dx + \frac{\partial\phi}{\partial y} dy + \frac{\partial\phi}{\partial z} dz = 0 \qquad \text{or} \qquad d\phi = 0$$

Changing the value of the constant K gives various equipotential lines or surfaces in the same way that various streamlines were obtained when this operation was performed with the stream function ($\psi = K$) .

On the other hand, the velocity vector and the streamlines are always perpendicular to the equipotential lines or equipotential surfaces. Consider the equation of an equipotential line given above in the case of a two-dimensional flow:

$$\frac{\partial\phi}{\partial x} dx + \frac{\partial\phi}{\partial y} dy = 0$$

$$\text{or} \qquad u\,dx + v\,dy = 0$$

It is deduced that the slope of an equipotential line is $\frac{dy}{dx} = -\frac{u}{v}$ which is normal to the slope of a streamline. (See XI-2.3.) More generally this may also be deduced from the fact that $\frac{\partial\phi}{\partial x}$, $\frac{\partial\phi}{\partial y}$, $\frac{\partial\phi}{\partial z}$ are the direction cosines of the perpendicular to the surface defined by $\phi = K$.

XI-3.5 VELOCITY POTENTIAL FUNCTION AND CONTINUITY

It is to be recalled that introducing ϕ in the continuity relationship (see Chapter III-3.4) $\frac{\partial u}{\partial x} + \frac{\partial v}{\partial y} + \frac{\partial w}{\partial z} = 0$ leads to

$\frac{\partial^2\phi}{\partial x^2} + \frac{\partial^2\phi}{\partial y^2} + \frac{\partial^2\phi}{\partial z^2} = 0$ or $\nabla^2\phi = 0$. Similarly, introducing ψ in the equation stating that the flow is irrotational leads to $\nabla^2\psi = 0$ as has been demonstrated in XI-2.6 .

Hence, a two-dimensional irrotational flow may be found as a solution of both:

$$\nabla^2\phi = 0 \qquad \text{or} \qquad \nabla^2\psi = 0$$

The following table summarizes the previous considerations:

Continuity	Irrotationality
Definition of ψ	Definition of ϕ
Expressed as $\nabla^2\phi = 0$	Expressed as $\nabla^2\psi = 0$

In a word, both $\nabla^2\phi = 0$ and $\nabla^2\psi = 0$ define an irrotational motion which satisfies the continuity principle.

XI-3.6 AN EXAMPLE OF VELOCITY POTENTIAL FUNCTION: UNIFORM FLOW

The simplest example of motion where the velocity potential may be used is the two-dimensional uniform flow for which the velocity potential function is (Fig. XI-3) :

$$\phi = Ax + By$$

The velocity components at any point are:

$$u = \frac{\partial\phi}{\partial x} = A \qquad v = \frac{\partial\phi}{\partial y} = B \qquad V = \sqrt{A^2 + B^2}$$

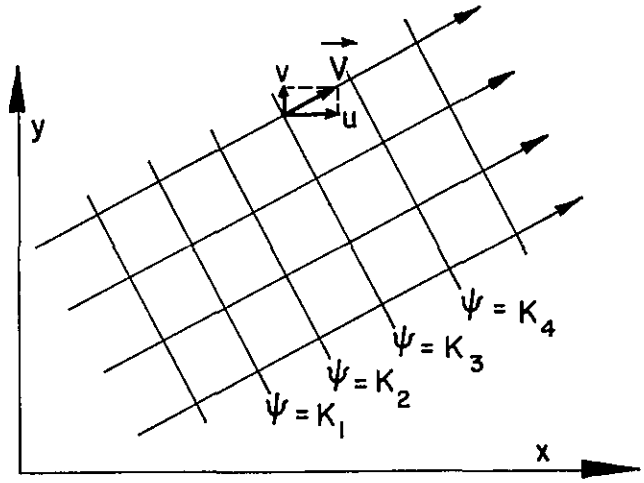

FIGURE XI-3
UNIFORM FLOW DEFINED BY A
VELOCITY POTENTIAL FUNCTION

That is the very same flow as that given by the stream function:

$$\psi = Ay - Bx$$

The equipotential lines are given by equating ϕ to constant value K:

$$Ax + By = K$$

They are straight lines of slope. $\frac{y}{x} = -\frac{A}{B}$

It may be noticed that these equipotential lines are perpendicular to the streamlines. (see XI-3.4)

XI-3.7 GENERAL REMARKS ON THE USE OF THE VELOCITY POTENTIAL FUNCTION

Introduction of ϕ instead of u, v, w in the basic momentum equation and continuity relationship reduces the number of unknowns

from three (or two in the case of a two-dimensional motion) to one. However, the order of differentiation is increased by one degree. Then the system of equations to be solved has the general form:

Continuity: $\nabla^2\phi = 0$

Momentum: $$\rho \frac{\partial\phi}{\partial t} + \frac{\rho}{2}\left[\left(\frac{\partial\phi}{\partial x}\right)^2 + \left(\frac{\partial\phi}{\partial y}\right)^2 + \left(\frac{\partial\phi}{\partial z}\right)^2\right] + p + \rho g z = f(t)$$

This momentum equation is often introduced as a free surface condition for which $p = \text{constant}$. But, in that case, another unknown must be introduced: $z = \eta(x, y, t)$ which is the equation of the free surface. However, in the case of infinitely small motion, this unknown may be eliminated and momentum equation and the free surface equation are simply replaced by the so-called Cauchy-Poisson condition

$$\frac{\partial^2\phi}{\partial t^2} + g\frac{\partial\phi}{\partial z} = 0 .$$

This matter is developed in Chapter XVI. The boundary conditions at a fixed boundary are $\frac{\partial\phi}{\partial n} = 0$. They indicate that the velocity component in a direction perpendicular to the boundary is zero. An irrotational flow under pressure is determined, at least in relative value, from continuity $\nabla^2\phi = 0$ and fixed boundary condition $\frac{\partial\phi}{\partial n} = 0$ only.

XI-4 STEADY, IRROTATIONAL, TWO-DIMENSIONAL MOTION, CIRCULATION OF VELOCITY

XI-4.1 A REVIEW, AN EXAMPLE, POLAR COORDINATES

XI-4.1.1 A Review of Previous Results

As previously seen, an irrotational two-dimensional motion satisfies all the conditions summarized in the following table, which establishes a parallel between stream function and potential function.

Continuity	Irrotationality
$\frac{\partial u}{\partial x} + \frac{\partial v}{\partial y} = 0$	$\frac{\partial u}{\partial y} - \frac{\partial v}{\partial x} = 0$
permit definition of	
The stream function ψ The streamlines are defined by: $d\psi = 0$ $\psi = K$	The velocity potential function ϕ The equipotential lines are defined by: $d\phi = 0$ $\phi = K$
The velocity components are: $u = \frac{\partial \psi}{\partial y} = \frac{\partial \phi}{\partial x}$ $v = -\frac{\partial \psi}{\partial x} = \frac{\partial \phi}{\partial y}$ $V = \frac{\partial \psi}{\partial n} = \frac{\partial \phi}{\partial S}$	
dn is the part of an equipotential line defined by $d\phi = 0$ dn is normal to the streamlines.	dS is the part of a streamline defined by $d\psi = 0$ dS is normal to the equipotential lines.
Irrotationality is expressed by: $\nabla^2\psi = 0$	Continuity is expressed by: $\nabla^2\phi = 0$

These characteristics involve others which have permitted the development of a number of very versatile tools to study a steady, irrotational, two-dimensional motion. For this reason, this kind of motion has taken on great importance in hydrodynamics and also in engineering practice since many three-dimensional motions can be successfully analyzed by neglecting the vertical or one horizontal component. For example, the flow in a wide river when the backwater curve effect is small, or the flow towards a well, may often be considered as two-dimensional motion.

The reader will have to refer to Chapter II and to section XI-3.1 to know when a flow may be considered as irrotational and when the following method can be used.

XI-4.1.2 An Example: Flow Toward a Plane (or Flow in a Square Corner)

The simple example of uniform flow has already been shown. Another example of irrotational two-dimensional flow is that defined by the stream function: $\psi = xy$. Giving ψ various constant values, it can be seen that the streamlines are represented by a family of rectangular hyperbolas which represent a flow towards a plate perpendicular to the incident motion (Fig. XI-4). Such a motion is irrotational since:

$$\frac{\partial u}{\partial y} - \frac{\partial v}{\partial x} = \frac{\partial^2 \psi}{\partial y^2} + \frac{\partial^2 \psi}{\partial x^2} \equiv 0$$

Therefore, a velocity potential function exists. This function may be found considering the following equalities:

$$u = \frac{\partial\phi}{\partial x} = \frac{\partial\psi}{\partial y} = x$$

$$v = \frac{\partial\phi}{\partial y} = -\frac{\partial\psi}{\partial x} = -y$$

Hence,

$$\phi = \int x\,dx = \frac{1}{2}x^2 + f(y)$$

$$\phi = \int y\,dy = -\frac{1}{2}y^2 + f(x)$$

It is easy to verify that

$$\phi = \frac{1}{2}(x^2 - y^2)$$

satisfies these two conditions.

The equipotential lines defined by ϕ = constant form a family of rectangular hyperbolas which are always perpendicular to the streamlines.

XI-4.1.3 Polar Coordinates

Before studying some typical flow patterns, it is useful to establish some fundamental formulas in polar coordinates. Referring to Fig. XI-5, it is seen that:

$$\vec{V} = \vec{u} + \vec{v} = \vec{v}_r + \vec{v}_\theta$$

and

$$v_r = u\cos\theta + v\sin\theta$$

$$v_\theta = -u\sin\theta + v\cos\theta$$

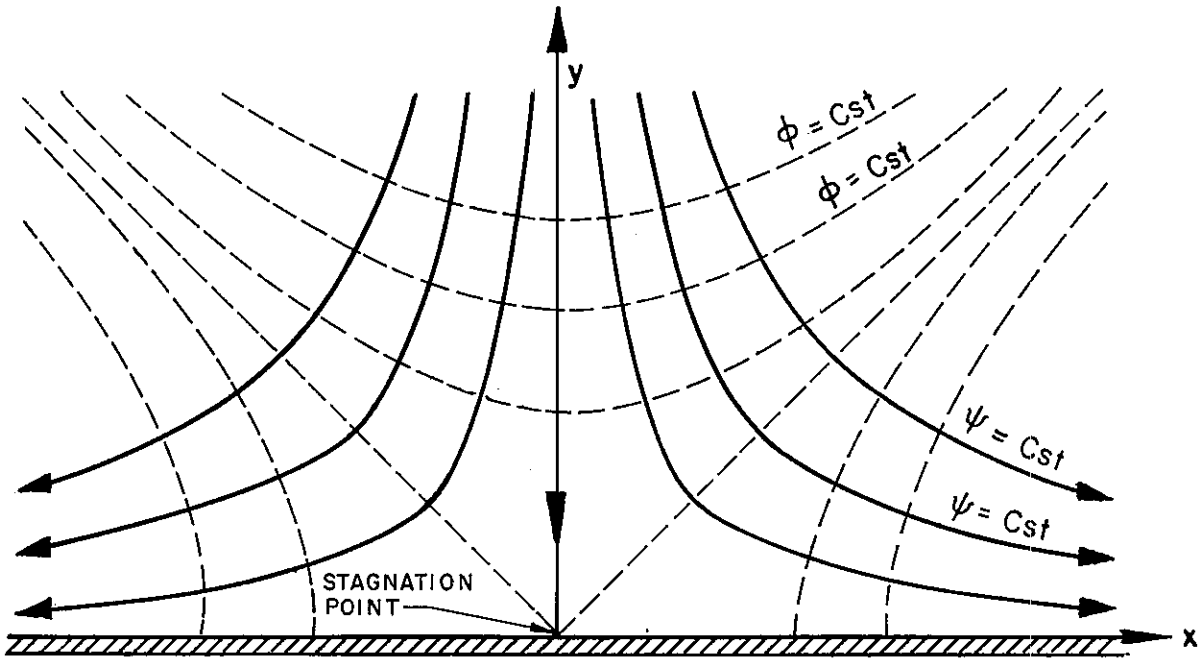

FIGURE XI-4
FLOW TOWARDS A PLATE

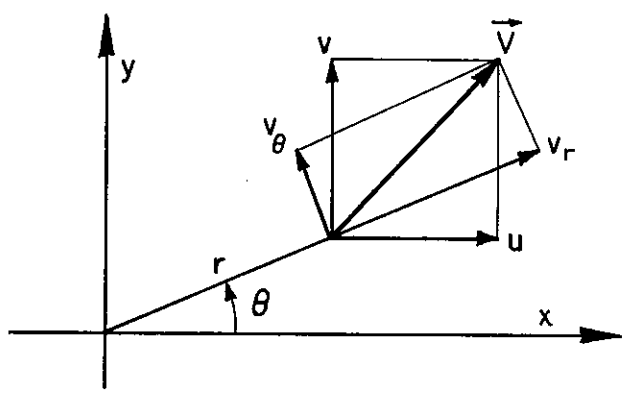

FIGURE XI-5
POLAR COORDINATES NOTATION

One has also:

$$x = r \cos \theta$$

$$y = r \sin \theta$$

$$\frac{\partial x}{\partial r} = \cos \theta, \quad \frac{1}{r} \frac{\partial x}{\partial \theta} = - \sin \theta$$

$$\frac{\partial y}{\partial r} = \sin \theta, \quad \frac{1}{r} \frac{\partial y}{\partial \theta} = \cos \theta$$

Now introducing ψ in the above equations leads successively to:

$$v_r = \frac{1}{r} \left[\frac{\partial \psi}{\partial y} (r \cos \theta) + \frac{\partial \psi}{\partial x} (-r \sin \theta) \right]$$

$$= \frac{1}{r} \left[\frac{\partial \psi}{\partial y} \frac{\partial y}{\partial \theta} + \frac{\partial \psi}{\partial x} \frac{\partial x}{\partial \theta} \right] = \frac{1}{r} \frac{\partial \psi}{\partial \theta}$$

and

$$v_\theta = - \frac{\partial \psi}{\partial y} \sin \theta - \frac{\partial \psi}{\partial x} \cos \theta$$

$$= - \frac{\partial \psi}{\partial y} \frac{\partial y}{\partial r} - \frac{\partial \psi}{\partial x} \frac{\partial x}{\partial r} = - \frac{\partial \psi}{\partial r}$$

Introducing ϕ gives similarly:

$$v_r = \frac{\partial \phi}{\partial x} \cdot \frac{\partial x}{\partial r} + \frac{\partial \phi}{\partial y} \cdot \frac{\partial y}{\partial r} = \frac{\partial \phi}{\partial r}$$

and

$$v_\theta = \frac{1}{r} \left[\frac{\partial \phi}{\partial x} (- r \sin \theta) + \frac{\partial \phi}{\partial y} (r \cos \theta) \right]$$

$$= \frac{1}{r} \left[\frac{\partial \phi}{\partial x} \frac{\partial x}{\partial \theta} + \frac{\partial \phi}{\partial y} \frac{\partial y}{\partial \theta} \right] = \frac{1}{r} \frac{\partial \phi}{\partial \theta}$$

Finally:

$$v_r = \frac{1}{r} \frac{\partial \psi}{\partial \theta} = \frac{\partial \phi}{\partial r}$$

$$v_\theta = - \frac{\partial \psi}{\partial r} = \frac{1}{r} \frac{\partial \phi}{\partial \theta}$$

By a similar calculation, the condition for irrotationality

$$2\zeta = \frac{\partial u}{\partial y} - \frac{\partial v}{\partial x} = 0$$

is found to be for a two-dimensional flow in cylindrical coordinates:

$$2\zeta = \frac{\partial r v_\theta}{\partial r} - \frac{1}{r}\frac{\partial v_r}{\partial \theta} = 0$$

XI-4.2 ELEMENTARY FLOW PATTERNS AND CIRCULATION

XI-4.2.1 Elementary Flow Patterns

Many cases encountered in engineering practice are closely approximate to some standard flow patterns. A great number of them are obtained by a combination or a transformation of three elementary flow patterns. These three basic patterns are: (see Figure XI-6)

a. Uniform flow, studied as an example in XI-2.4 and XI-3.6;

b. Radial flow: source or sink;

c. Circular flow or vortex flow which is an irrotational flow with a so-called circulation of velocity. If one or more vortices are included, the resulting complex flow pattern is still irrotational. However, the circulation of velocity may not be zero if the area defined by the path of integration includes one vortex.

XI-4.2.2 Flow Patterns Without Circulation of Velocity

Some examples of elementary combinations of flow patterns without circulation are: (see Figure XI-7)

a. One source and one sink;

b. A doublet: a source and a sink at the same point;

c. Flow past a half body: a source and uniform flow;

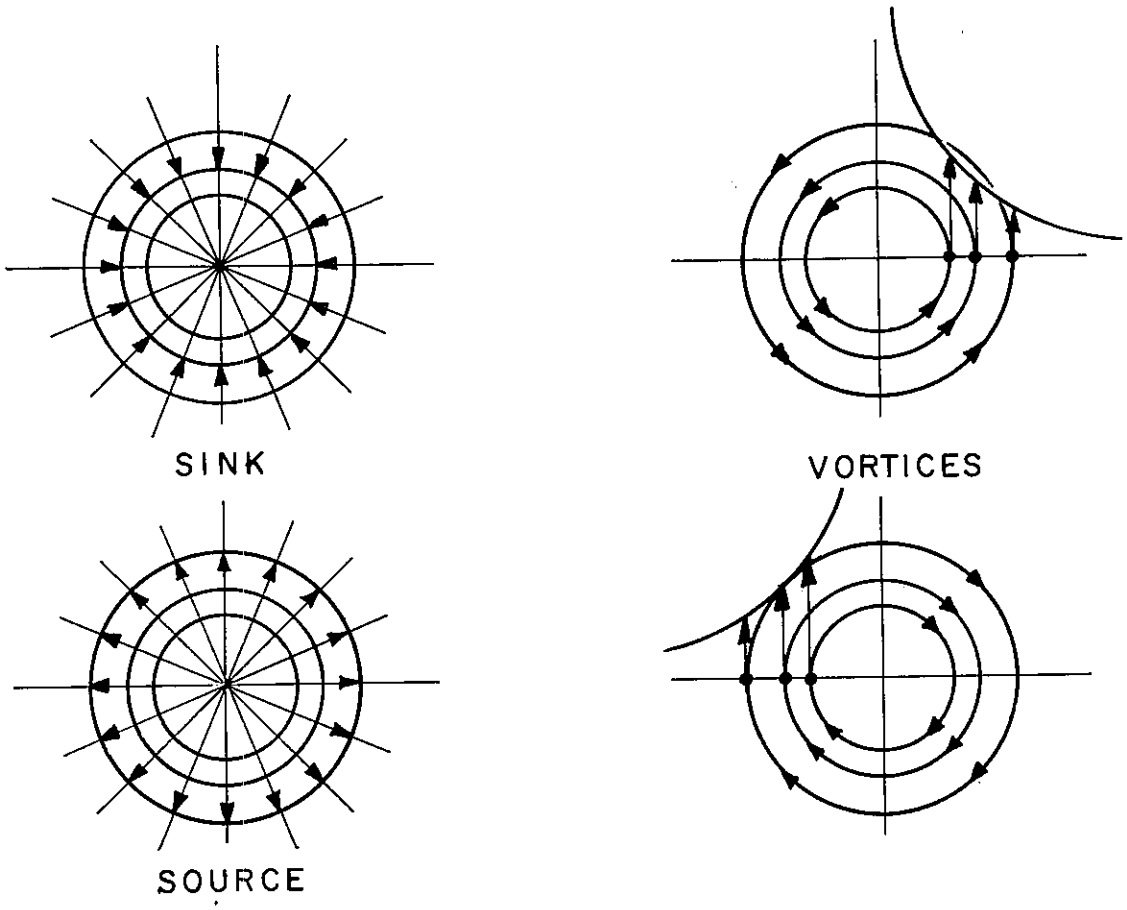

FIGURE XI-6
BASIC FLOW PATTERNS

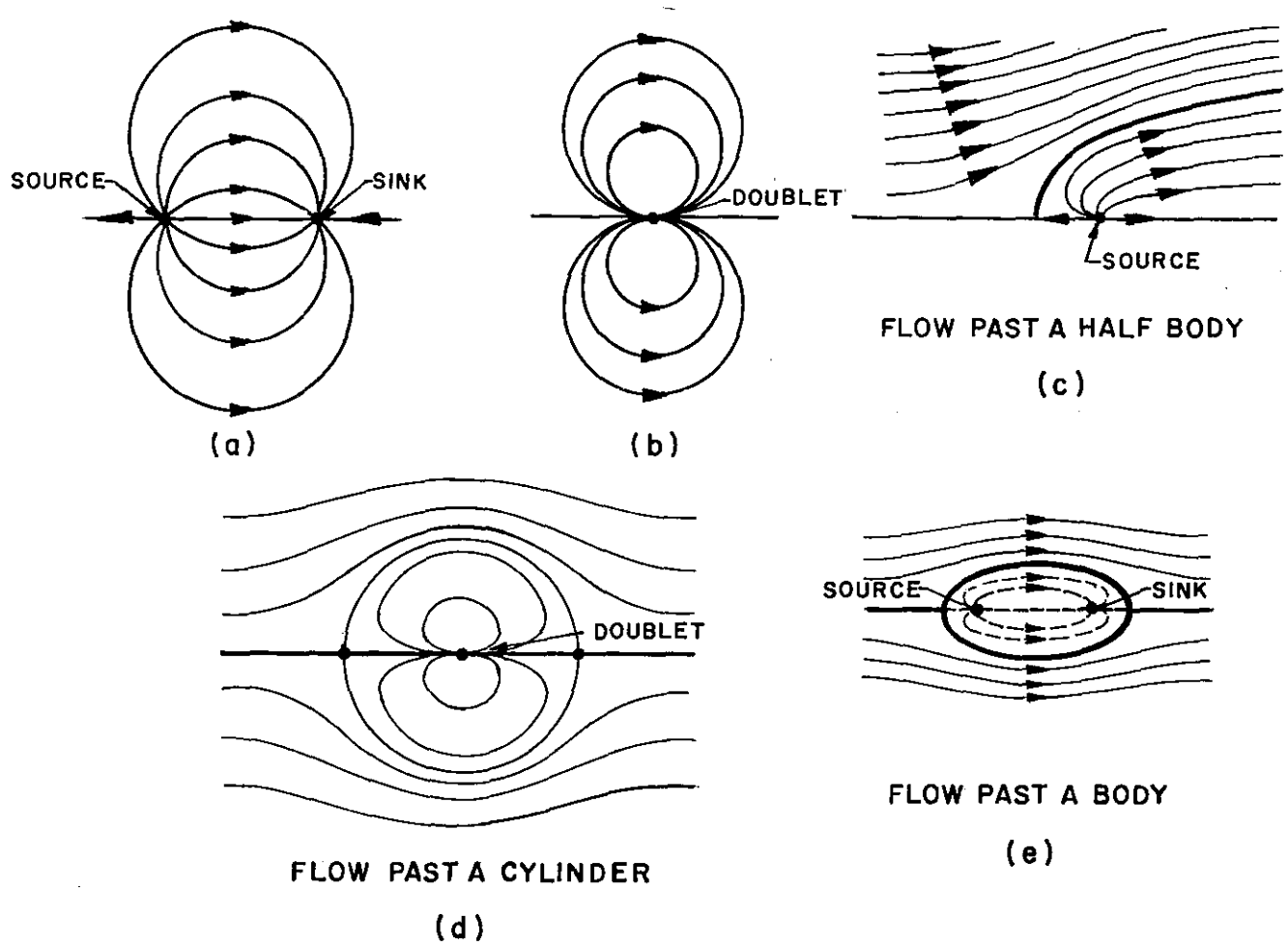

FIGURE XI-7
EXAMPLES OF COMBINATION OF BASIC FLOW PATTERNS WITHOUT CIRCULATION

d. Flow past a cylinder: a doublet and a uniform flow;

e. Flow past a long body: (Rankine body) or a streamlined fixed body: a source, a sink, and a uniform flow, or a source, a series of sinks, and a uniform flow.

XI-4.2.3 Flow Patterns with Circulation of Velocity

Some elementary combinations of flow patterns with circulation of velocity are: (see Figure XI-8)

a. Spiral vortex: sink and vortex;

b. Flow past a cylinder with circulation of velocity;

c. The flow past a cylinder with circulation may be transformed by a conformal mapping operation to the flow around a wing: This is the theory of aerofoil.

XI-4.2.4 Source and Sink

A source is a flow radially outward from a point assumed to be infinitely small (Figure XI-6). A sink is a flow radially inward to a point.

In practice, such a flow is fairly well represented by the flow through a porous medium towards a well of small diameter, insofar as the vertical component is small; i.e., insofar as the curvature of the water table is small.

But as previously mentioned, its main interest lies in the fact that complex flow patterns usually encountered in engineering practice may be obtained by a combination of sources, sinks, and other elementary kinds of flows.

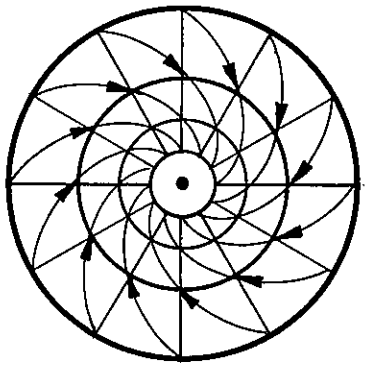

SPIRAL VORTEX

(a)

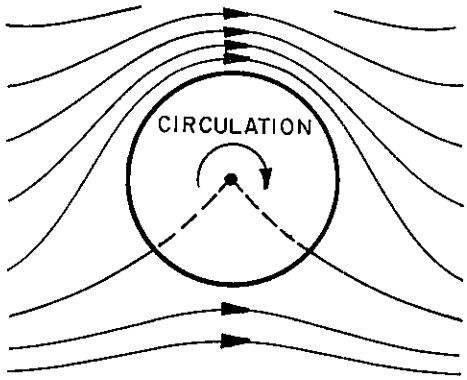

FLOW PAST A CYLINDER

(b)

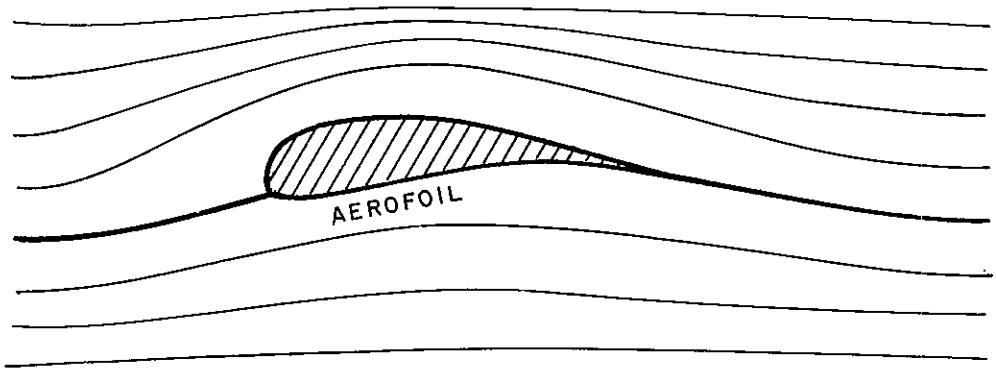

(c)

FIGURE XI-8

EXAMPLES OF FLOW WITH CIRCULATION OF VELOCITY

Let Q be the discharge of the source. The components of velocity at any point are: $v_\theta = 0$ (for reason of symmetry) and

$$v_r = \frac{Q}{2\pi r} = \frac{\partial \phi}{\partial r} = \frac{1}{r}\frac{\partial \psi}{\partial \theta}$$

Stream function and velocity potential function are given by direct integration. They equal respectively:

$$\phi = \frac{Q}{2\pi} \ln r$$

$$\psi = \frac{Q}{2\pi} \theta$$

Equipotential lines, given by ϕ = constant, are circles (r = constant). Streamlines, given by ψ = constant, are straight radial lines (θ = constant). Changing Q to $-Q$ gives the velocity potential function and stream function of a sink.

It is easy to verify that the velocity potential function of a three-dimensional source where $V = \frac{Q}{4\pi r^2}$ is: $\phi = \frac{Q}{4\pi r}$. In this case, the equipotential surfaces ϕ = constant are spheres (r = constant).

XI-4.2.5 Vortex

A vortex is a flow in which the streamlines are concentric circles (Figure XI-9). In a "forced vortex" water turns as a monolithic mass, the velocity being proportional to the distance from the center (See II-4.1).

The flow under study is a "free vortex". Such a flow is a pure mathematical concept, which has no physical equivalent. But associated with another simple flow, such as a uniform flow or a sink,

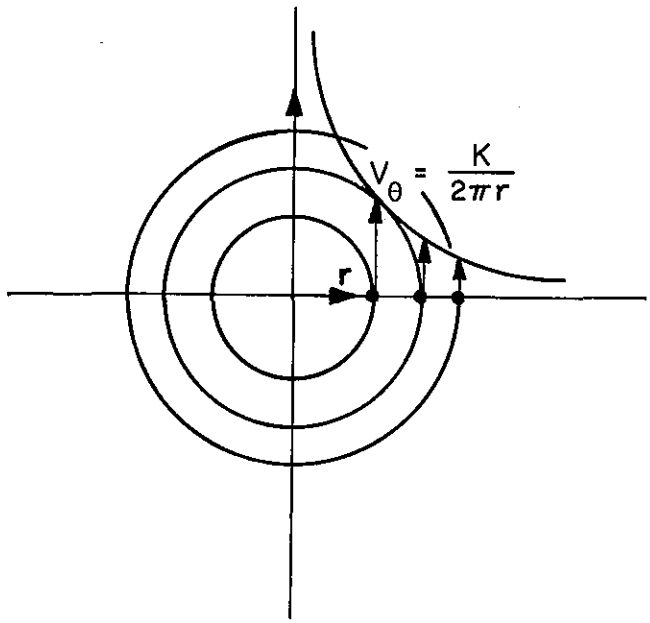

FIGURE XI-9
VORTEX

it may have a physical significance.

In a free vortex the velocity distribution is governed by the law $V r = \text{constant} = \frac{K}{2\pi}$. It may be seen that when r tends to zero, v_θ tends to infinity. Such a motion is irrotational.

Since there is no radial flow

$$v_r = \frac{\partial \phi}{\partial r} = \frac{1}{r} \frac{\partial \psi}{\partial \theta} = 0$$

Hence one obtains

$$v_\theta = V = \frac{K}{2\pi r} = \frac{1}{r} \frac{\partial \phi}{\partial \theta} = -\frac{\partial \psi}{\partial r}$$

which yields

$$\phi = \frac{K}{2\pi} \theta , \qquad \psi = -\int \frac{K}{2\pi r} dr = -\frac{K}{2\pi} \ln r$$

The flow pattern is very much the same as that of a source or a sink, but the stream lines and equipotential lines are interchanged. Since the flow is irrotational, the Bernoulli equation may be applied throughout the fluid:

$$\frac{V^2}{2g} + \frac{p^*}{\varpi} = \text{constant}$$

This yields:

$$\frac{K^2}{8\pi^2 r^2 g} + \frac{p^*}{\varpi} = \text{constant}$$

It is interesting to note that when r tends to zero, $\frac{p^*}{\varpi}$ tends to $-\infty$. Hence the presence of vortices in a flow is a very important cause of cavitation when air is not admitted into the core from a free surface. Then capillarity forces take on importance when $r \rightarrow 0$.

XI-4.2.6 Circulation of Velocity - Definition

Circulation is a mathematical concept on which the theories of wings, aerofoils, blades of pumps or turbines, propellers, fans, the Magnus effect which causes deviation of a tennis ball, some sand motions in a flow, etc. are based.

Circulation is given by the integral along a curve S of the tangential velocity component V_S along any closed curve S

$$\Gamma = \int_S V_S \, dS$$

It may be demonstrated that Γ is equal to zero in an irrotational flow.

There is an exception if the closed curve is around a point

which is the center of a vortex. Then:

$$\Gamma = v_\theta \, 2\pi r$$

and since

$$v_\theta = \frac{K}{2\pi r}: \quad \Gamma = K$$

Such a flow is called irrotational with circulation. The circulation along a closed curve in a rotational flow is generally different from zero and it may be demonstrated that when the closed curve is around an elementary area $dx\,dy$, $d\Gamma = \zeta\,dx\,dy$. Also, it can be demonstrated that the circulation Γ is equal to the flux of the vector rotation of components ζ, η, ξ through the considered area limited by the curve S. Only the definition of the circulation is given here since it is important to know at least its definition. Its use requires further study beyond the scope of this book.

XI-4.3 COMBINATION OF FLOW PATTERNS

As previously seen, a great number of very complicated flows are obtained by simple addition of the three basic flow patterns studied in the previous paragraphs:

Uniform flow;

Radial flow: source or sink;

Circular flow: vortex.

Examples are given at first, then the conditions to be satisfied for flow patterns, velocity potential functions, or stream functions to be added, are analyzed by consideration of the boundary conditions. Also, some more general considerations on the methods of calculation in hydraulics are given.

XI-4.3.1 Two Examples

XI-4.3.1.1 Flow Past a Half Body

It has been seen that a uniform flow may be defined by $\phi_1 = Ax$, or $\psi_1 = Ay$. A source may be defined by $\phi_2 = \frac{Q}{2\pi} \ln r$, or $\psi_2 = \frac{Q}{2\pi}\theta$. Their addition gives the pattern defined by the velocity potential function:

$$\phi = \phi_1 + \phi_2 = Ax + \frac{Q}{2\pi} \ln r$$

and the stream function:

$$\psi = \psi_1 + \psi_2 = Ay + \frac{Q}{2\pi}\theta$$

This flow pattern is presented in Figure XI-10. It may be noticed that a central streamline completely separates the source from the outside part of the plane. This streamline may be considered as the round nose body of a pier, for example. In elevation, the upper half of the flow pattern might be regarded as the flow of wind above a hill.

Streamlines and equipotential lines may be obtained graphically from the two basic flow patterns. It is sufficient to add a value $\psi_1 = K_1$ (or $\phi_1 = K'_1$) to a value $\psi_2 = K_2$ (or $\phi_2 = K'_2$) in such a way that $K_1 + K_2$ (or $K'_1 + K'_2$) are always equal to a constant value K.

For example, the intersection of $\psi_1 = 4$ with $\psi_2 = 5$ gives $\psi = 9$. The intersection of $\psi_1 = 3$ with $\psi_2 = 6$ gives also $\psi = 9$. The line joining all the intersections for which $\psi = 9$ is the streamline marked $\psi = 9$. The drawing is very simple when the same interval $\Delta\psi$ (or $\Delta\phi$) is chosen in the two elementary flow patterns. In the case of Figure XI-10, this interval $\Delta\psi$ is unity.

XI-4.3.1.2 Flow Past a Cylinder

Similarly, it can be demonstrated that one source and one sink of same intensity and located at the same point form a doublet defined by the stream function

$$\psi_1 = -\frac{K \sin\theta}{r}$$

The addition of a doublet with a uniform flow $\psi_2 = U r \sin\theta$ gives a streamline in the shape of a cylinder. Hence the outside flow pattern is considered as the flow of a perfect fluid around a cylinder. The stream function for flow around a cylinder is

$$\psi = -\frac{K \sin\theta}{r} + U r \sin\theta$$

or

$$\psi = U\left(r - \frac{R^2}{r}\right) \sin\theta$$

where $R = \sqrt{\frac{K}{U}}$ and U the velocity at infinity. It can be demonstrated that R is the radius of the cylinder. The potential function is found to be

$$\phi = -U\left(r + \frac{R^2}{r}\right) \cos\theta$$

The velocity distribution around the cylinder is

$$V = v_\theta\Big|_{r=R} = \frac{1}{r}\frac{\partial\phi}{\partial\theta} = 2U \sin\theta$$

and the pressure distribution is

$$(p - p_\infty) = \frac{1}{2}\rho U^2 \left[1 - 4\sin^2\theta\right]$$

where p_∞ is the pressure at infinity. It can be verified that the net pressure force on the cylinder,

$$F = 4\int_0^{\pi/4} p \cos\theta \; R \, d\theta ,$$

is nil. This result is general. The total force exerted by uniform stream of a perfect fluid on a submerged body, without circulation of

velocity, is nil. It is the paradox of d'Alembert.

XI-4.3.2 General Rule of Addition

ϕ_1, ϕ_2, $\cdots \phi_n$, $\cdots$ being solutions of $\nabla^2\phi = 0$, any combination $\phi = \phi_1 + \phi_2 + \cdots + \phi_n + \cdots$ is also a solution of $\nabla^2\phi = 0$ and hence is a possible flow pattern. A similar rule exists for the stream function ψ, solution of $\nabla^2\psi = 0$. This general rule has its limitations. This is the subject of the following section.

XI-4.3.3 Limitation to the Rule of Addition

Examples will permit a better understanding. Consider the flows presented in Figure XI-11.

In the case of the flow under pressure, an addition of solutions characterized by velocities $\vec{V}_1$ and $\vec{V}_2$ at a given point does not change the flow pattern since it does not depend upon the absolute value of the velocity. In the second case of flow with a free surface, the flow pattern is changed since the slope of the free surface changes with V. The solutions cannot be added since they depend upon the absolute value of the velocity. This stems from the fact that the flow depends upon a non-linear equation: the momentum equation; or more specifically the Bernoulli equation, in which the elevation of the free surface is related to the square of the velocity. The first flow pattern under pressure may be drawn directly from the fixed boundary which defines two streamlines. This flow pattern depends only on linear relationships:

The Continuity: $$\frac{\partial u}{\partial x} + \frac{\partial v}{\partial y} = 0 \quad \text{or} \quad \nabla^2\phi = 0$$

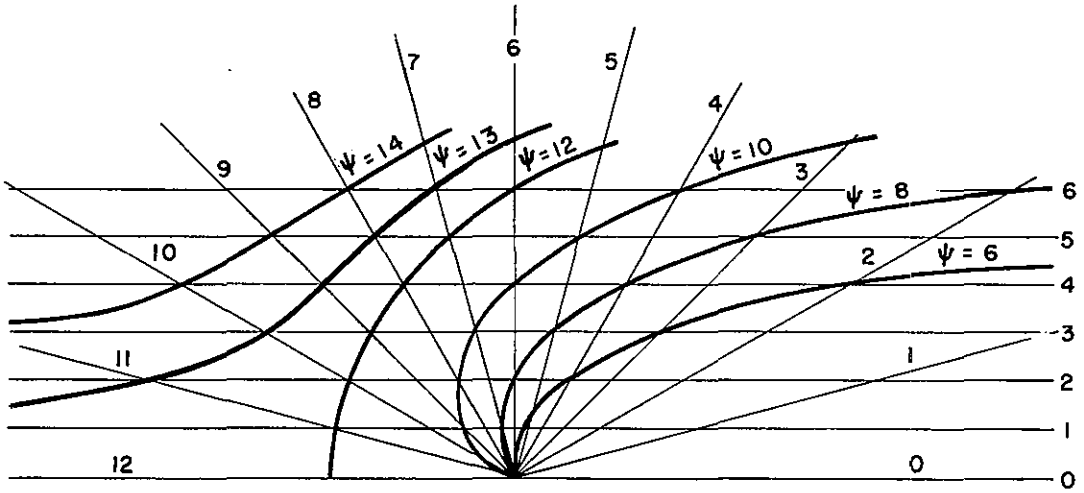

FIGURE XI-10
GRAPHICAL METHOD OF ADDITION OF FLOW PATTERNS

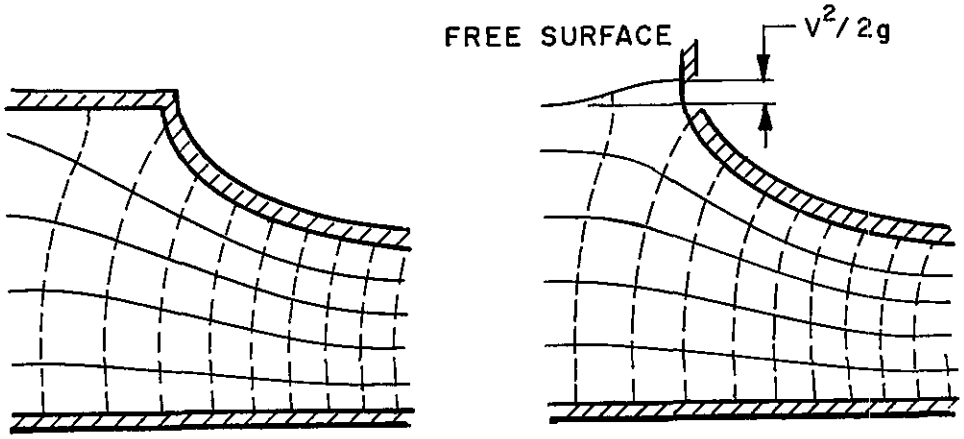

FIGURE XI - 11
THE FLOW PATTERN DEPENDS UPON THE SHAPE OF THE FREE SURFACE

The Irrotationality: $\frac{\partial u}{\partial y} - \frac{\partial v}{\partial x} = 0$ or $\nabla^2 \psi = 0$

The Boundary Condition: $\frac{\partial \phi}{\partial n} = 0$

This boundary condition is one involving the continuity only.

The flow pattern does not depend upon the absolute value of velocity but only upon its relative value. In a word, the solution for the flow pattern under pressure within given boundary is unique. The absolute value of the velocity at a point is often given instead of a boundary condition but the determination of the velocity at this point may require the application of the non-linear momentum equation.

Then the pressure distribution may be calculated in a final independent step by application of the momentum equation in the form of the Bernoulli equation.

In the second case the flow has a free surface. This free surface is unknown and must be calculated taking into account both the non-linear momentum equation and the continuity equation.

The boundary condition at the free surface p = constant involves a force and must be introduced in the momentum equation to calculate the shape of the free surface streamlines. In turn, this shape has an effect on the flow pattern.

Hence the flow pattern and the velocity field on one side, and the pressure distribution and free surface streamlines on the other side, cannot be calculated independently by successive steps as in the previous case. The flow pattern depends upon the absolute value of the velocity

and may be known only by a combination of linear equations (continuity) with the non-linear momentum equation. The assumption of irrotationality may be introduced in the momentum equation, but this does not make the momentum equation linear. The considerations given above lead to some more general remarks on the importance of the boundary conditions.

XI-5 REFLECTIONS ON THE IMPORTANCE OF BOUNDARY CONDITIONS

XI-5.1 NEW THEORETICAL CONSIDERATIONS ON THE KINDS OF FLOW

From the previous considerations, it is seen that in any kind of flow the method to be used to determine the flow pattern depends upon the kind of boundary conditions and upon the assumption of rotationality. From this point of view, two major categories of motion may be distinguished which are encountered in all methods in hydraulics: analytical, numerical, and graphical methods or methods based on an analogy. The major categories are on one hand the irrotational motions under pressure and slow motion, and on the other hand, the free surface flow and flow with friction force.

XI-5.2 IRROTATIONAL MOTION UNDER PRESSURE AND SLOW MOTION

The first category includes all irrotational motions under pressure, or considered as such, and slow motion in which the quadratic terms are negligible.

XI-5.2.1 The Case of Flow under Pressure

The streamlines at the boundary are fully determined since they are coincident with this boundary. The boundary conditions are expressed to satisfy the continuity principle, that is that the velocity is tangential to the boundary. The flow pattern depends completely upon linear equations only, expressing the continuity and the irrotationality principles. Then the flow pattern is relatively easily known.

The velocity field gives the relative value of the velocity. The absolute value can be known when the velocity is determined at one point, either given by a boundary condition or calculated by application of the momentum equation at this boundary (for example by the Torricelli formula $V = \sqrt{2gz}$).

Finally, the pressure distribution is determined from the knowledge of the velocity at any given point by application of the momentum equation.

On the other hand, this kind of flow pattern, determined from linear laws, can be considered as the superimposition of simpler basic flow patterns.

XI-5.2.2 The Case of Slow Motion

In the case of slow motion the motion is mathematically considered as infinitely small, even with a free surface. Hence, all the quadratic terms may be neglected and the momentum equation becomes linear. The free surface is considered as known at the beginning and denoted by a horizontal line. In that case various solutions

of flow patterns may be added.

For example, if ϕ_1 is the velocity potential function of a periodical gravity wave at the first order of approximation, that is when the convective inertia term is neglected, and ϕ_2 is the potential function of another wave traveling in the opposite direction, ϕ_1 and ϕ_2 are determined by the system of linear equations:

Continuity: $\nabla^2\phi = 0$

Momentum (free surface condition): $\left[\frac{\partial^2\phi}{\partial t^2} + g\frac{\partial\phi}{\partial z}\right]_{z=0} = 0$

Bottom condition: $\left[\frac{\partial\phi}{\partial n}\right]_{z=-d} = 0$

Hence $\phi = \phi_1 + \phi_2$ is the potential of the resultant "clapotis" (see Section XVI-3).

ϕ_1 and ϕ_2 may also be calculated at a higher order of approximation from the non-linear free surface conditions, which take into account the convective inertia term. Then the solution ϕ, representing the two non-linear waves, cannot be obtained by simple addition of the new solutions ϕ_1 and ϕ_2 given at a high order of approximation. It must be calculated from the basic equations. Similar considerations prevail in the case of irregular waves traveling at different velocities in the same direction. There is non-linear interaction.

In conclusion, in order that the velocity potential functions and the stream functions may be added, they must depend upon a linear and homogeneous equation only. Also, the boundary conditions should be homogeneous.

XI-5.3 FREE SURFACE FLOW AND FLOW WITH FRICTION FORCES

The second category of motion includes all motions at the free surface or the motions where the friction forces have a non-negligible effect, causing the motion to be rotational.

XI-5.3.1 Free Surface Flow

The free surface condition involves a force ($p = cst$). This force can only be inserted in the momentum equation which is an equality of force.

The flow pattern depends not only upon the linear continuity equation but also upon the non-linear momentum equation, which is linear only in the case of uniform motion. The pattern must be calculated by combining the continuity relationship with the momentum equation at the free surface. Difficulties arise not only from this non-linearity, but also from the fact that the free surface is unknown.

XI-5.3.2 Flow with Friction Forces

Similarly, a friction force (resulting in a rotational term different from zero) gives a boundary condition $\vec{V} = 0$. Such a boundary condition must be introduced in the momentum equation also. The non-linearity of the momentum equation, caused by the convective inertia term, is the major cause of difficulty in studying this kind of flow.

These mathematical difficulties show the importance of the irrotational motion under pressure and of the slow motions in theoretical hydraulics, even if they only represent very approximately the natural conditions.

XI-6 FLOW NET

XI-6.2 FLOW NET PRINCIPLE

The flow net is a family of equipotential lines and a family of streamlines representing a complete two-dimensional flow pattern. (See XI-2.3.)

The equalities $V = \frac{\partial \phi}{\partial s} = \frac{\partial \psi}{\partial n}$ for a finite difference, take the form $V = \frac{\Delta \phi}{\Delta s} = \frac{\Delta \psi}{\Delta n}$.

First, $\Delta\psi$ is chosen to be a constant in the complete velocity field, which means that the discharge ΔQ between two adjacent streamlines is the same ($\Delta\psi = \Delta Q$). (See XI-2.3.)

Second, the interval $\Delta\phi$ is chosen to be equal to $\Delta\psi$, which leads to $\Delta s = \Delta n$. Δs is the streamline element, while Δn is an equipotential line element with right angle intersections. Hence, Δs and Δn are the two sides of a curvilinear square, which tends to be an exact square when Δs and Δn tend to the infinitesimals ds and dn.

This characteristic of a two-dimensional irrotational flow permits one to draw a complete flow pattern as a mesh of squares. (Figure XI-12.) At any point, the velocity direction is given by the streamline. The velocity intensity given in relative value, is inversely proportional to the square sides.

The graphical procedure for construction of a flow net depends on whether the flow is under pressure or with a free surface.

XI-6.2 FLOW UNDER PRESSURE

XI-2.6.2 Its Use

The first case where the flow net method may be of very great use is for flow between two fixed boundaries, which corresponds to a flow under pressure.

A flow net around a solid body with well determined boundary conditions at infinity follows the same rules of construction. Also, it must be noted that many flows at the free surface, such as in a wide and relatively shallow river in which rotation is about a horizontal axis, may be defined by a two-dimensional velocity potential function and studied by the flow net method (see XI-5.4). However, components caused by wave effects or backwater curves must then be neglected. All these types of flow obey the same basic rules as the flows between fixed boundaries.

XI-6.2.2 Method of Construction of a Flow Net

Figure XI-12 begins in the regions where the velocity distribution is evident, such as in a uniform or radial flow. Then a number of streamlines are selected as a function of the desired accuracy, taking into account that this number could easily be increased in a given area if a greater local accuracy is required. Then the equipotential lines are drawn intersecting the streamlines (including the boundaries) perpendicularly, and forming squares with the streamlines.

The simplest method of checking the correctness of the drawing is to draw the diagonal lines of the square mesh. These diagonals should themselves form smooth curves which intersect each other

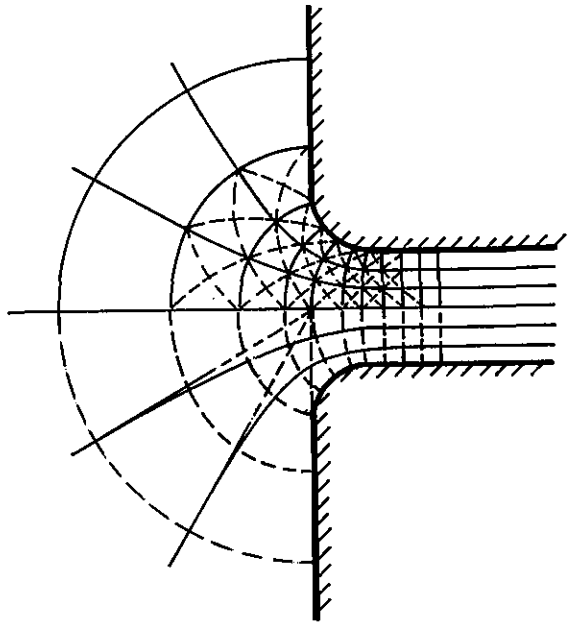

FIGURE XI - 12
FLOW NET STARTED IN RADIAL
AND UNIFORM FLOWS

perpendicularly. This is Prasil's method, demonstrated in Figure XI-12. (See also Figure XI-14.) If these diagonals do not intersect, a second drawing is made by superimposition of transparent paper to correct the first mistakes, repeating the process until the desired result is obtained. Usually three successive drawings are sufficient to obtain an accurate flow net by trial and error.

XI-6.2.3 Limitations of Validity of the Flow Net Method

The limits of validity of the flow net method to study flow under pressure are the same as those imposed by the assumption of irrotational motion. That is, the flow net method may be applied to study short convergent flow, or flow through porous medium when the

Reynold's number is smaller than 1.

Divergent flow causing separation and wakes, long structures where the friction forces cause the motion to be rotational, and unsteady motion cannot usefully be studied by the flow net method. In the case of a wake a flow net method may be used if the separation line is determined. (See Figure XI-13.) The pressure and velocity are then considered as constant along this line. Its determination is relevant to the method for flow with a free surface, which is the subject of the next section.

XI-6.3 FLOW NET WITH FREE SURFACE

XI-6.3.1 The Free Surface is Known

When the free surface boundaries are known by previous experiment, the same method as that explained to construct a flow net under pressure may be used. Moreover, a free surface condition is given which determines the distance between equipotential lines.

Three cases may be distinguished:

a. Flow through porous medium: the vertical distances between successive equipotential lines, following the rule $\Delta\phi$ = constant, are constant as has been shown in section IX-2.6 (Figure IX-5).

b. Horizontal high velocity flow: a flow through an orifice or from a gate, with a contraction and under a high head (Figure XI-14). In this case, by application of the Bernoulli equation, $V = \sqrt{2g(H - z)}$, H being the total head while z refers to the exact elevation of any point under consideration above the level downstream of the gate. In many cases, z is always small compared with H, and V is considered as

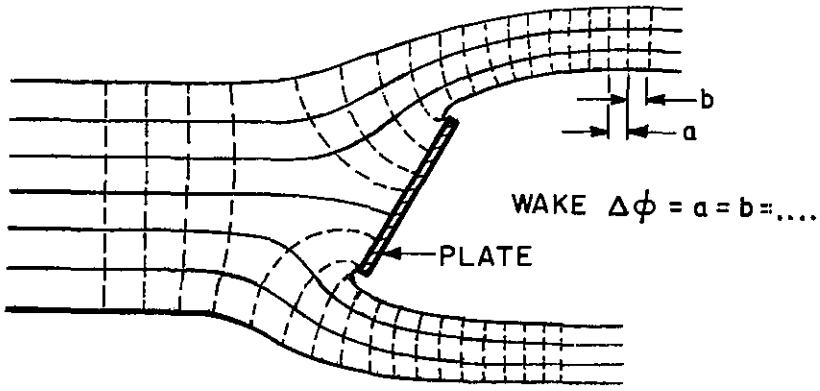

FIGURE XI - 13
WAKE

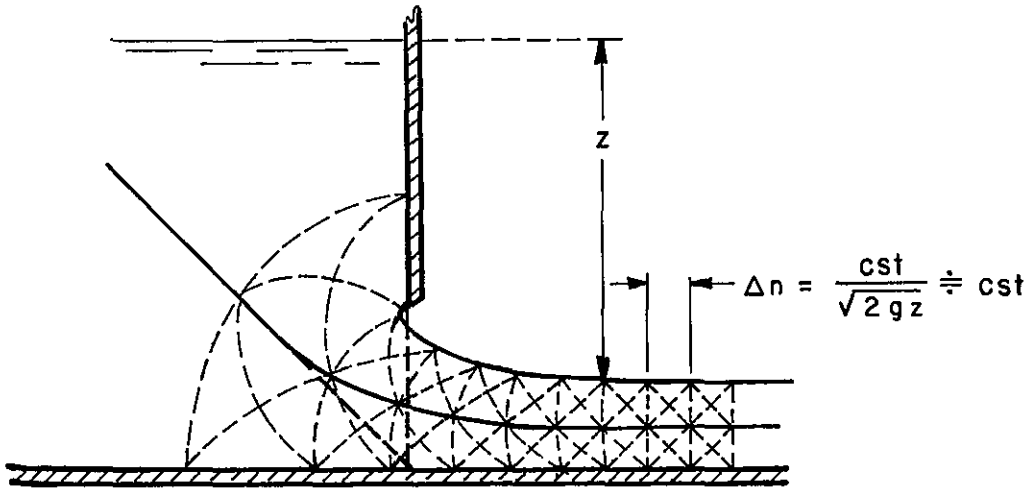

FIGURE XI - 14
HORIZONTAL HIGH VELOCITY FLOW

a constant at the free surface. Hence, the distances between equipotential lines are equal. In a word, such a flow is determined by considering that the gravity force in the downstream part of the gate or the orifice is negligible.

c. Flow with vertical velocity component (over a weir): the velocity at the free surface varies with z. According to the Bernoulli equation, $V = \sqrt{2gz}$. Hence, the distance between the free surface and the first streamline is given by: $\frac{\Delta\phi}{V} = \frac{\text{constant}}{\sqrt{2gz}} = \Delta n = \Delta s$.

XI-6.3.2 The Free Surface is Not Known

Theoretically, the continuity and the momentum equations, which give conditions such as those presented in a, b, and c above, should be sufficient to determine the free surface streamline and the complete flow pattern. The solution proceeds as follows: First, a tentative streamline is drawn intuitively. Then the distances between equipotential lines are calculated as shown in section XI-6.3.1. The flow net drawn on this basis must be found to be consistent with the given fixed boundary. If it is not, a second trial is made by modification of the free surface, and so the solution proceeds. It is easy to conceive that such a trial and error method is tedious and inaccurate.

Hence, although such a procedure is theoretically possible, it is unrealistic to attempt to determine a flow net with a free surface without an experiment (and more so, when it is a flow between two free surfaces such as a free falling jet). Most often the necessary experiments for determining the free surface are self-sufficient for the

practical engineering purposes: since a model has to be built, it can also be used for measuring the pressure distribution; and the determination of the flow net is then a purely academic exercise.

Only flow through an earth dam, because of its importance and the limit of validity of the experimental process, justifies the flow net method with a free surface. Some empirical relationships are given as a guide to start the flow net. Actually, however, it is more often studied by electrical analogy, but here also the determination of the free surface can involve difficulty.

XI-6.4 OTHER METHODS, CONFORMAL MAPPING

XI-6.4.1 Relaxation Method and Analogical Methods

A number of methods exist for drawing a flow net. All of them are based on the same principles, and a similar difficulty is encountered in the determination of a free surface.

The relaxation method is based on numerical calculus.

An analogy with an electrical field is very often used, by measuring directly the analogous equipotential lines between boundaries at different voltages. Many systems exist using liquid resistance mesh, wetted earth, etc.

The relaxation method and electrical method may be easily extended to three-dimensional irrotational flow.

Another analogical method is based on the fact that the mean motion of laminar flow at constant thickness may be considered as irrotational (see II-5.4). Dye such as fluoresceine and permanganate give the streamlines directly.

Finally, since the mean motion of laminar flow through a

porous medium is irrotational, it is very easy to use the analogical method also to study any two-dimensional or three-dimensional patterns.

XI-6.4.2 Conformal Mapping

XI-6.4.2.1 It is out of the scope of this book to develop this powerful mathematical tool for studying two-dimensional irrotational flows with or without circulation of velocity. Only the principle is described in the following.

Conformal mapping is based on the use of complex numbers ($W = \phi + i\psi$) ($Z = x + iy = re^{i\theta}$) and the use of the function of complex variable ($W = f(Z)$). (See Figure XI-15.)

Briefly, a conformal mapping operation consists of establishing a relationship between each point of a given flow pattern in the x, y plane and a point of another flow pattern in the ϕ, ψ plane. The first one is often the real flow under study. The second one is often a uniform flow pattern. Successive conformal mapping operations may also be

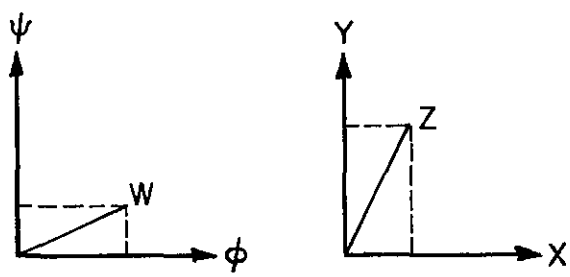

FIGURE XI - 15
NOTATION FOR CONFORMAL MAPPING

done in order to pass step by step from a very complex flow pattern to a uniform flow.

Conformal mapping can also be used for determining free streamlines by the application of the so-called Schwartz-Christoffel theorem. However, the application of this theorem requires the neglection of gravity forces.

XI-6.4.2.2 An Example: Flow Past a Cylinder

Let us consider the transformation

$$W = U\left(Z + \frac{R^2}{Z}\right)$$

where $W = \phi + i\psi$ is the equation for a uniform flow in the W-plane, i.e., in the system of axis ϕ-ψ. This flow is parallel to the axis ϕ, and the streamlines being defined by ψ = constant are perpendicular to the axis ψ (see Figure XI-16).

The above relationship characterizes the transformation of a flow around a cylinder of radius R into a uniform flow. This is evidenced by the following operation aimed at separating the real part and the imaginary parts.

$$\begin{aligned}
\phi + i\psi &= U\left(r\, e^{i\theta} + \frac{R^2}{r} e^{-i\theta}\right) \\
&= U\left(r \cos\theta + \frac{R^2}{r}\cos\theta + i\, r \sin\theta - i\,\frac{R^2}{r}\sin\theta\right) \\
&= U\left(r + \frac{R^2}{r}\right)\cos\theta + i\,U\left(r - \frac{R^2}{r}\right)\sin\theta
\end{aligned}$$

Then it is seen that the potential function is

$$\phi = -U\left(r + \frac{R^2}{r}\right)\cos\theta$$

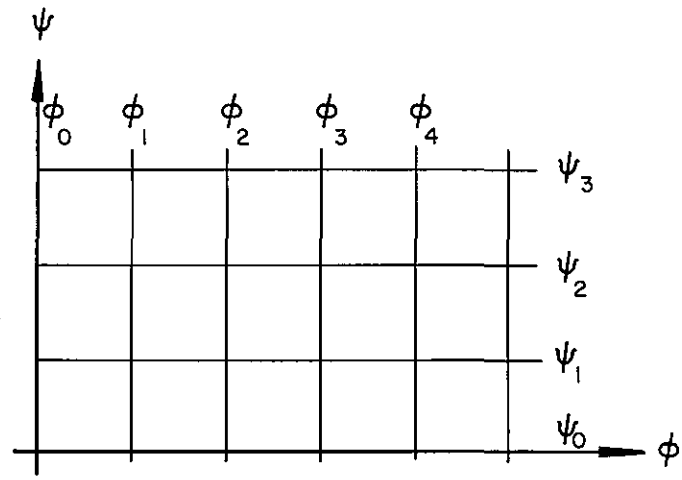

FIGURE XI-16
UNIFORM FLOW

and the stream function ψ is

$$\psi = U\left(r - \frac{R^2}{r}\right) \sin\theta$$

which are those of a flow around a cylinder (see Section XI-4.3.1.2).

XI-6.4.2.3 The following transformations can be studied by using a similar approach:

Uniform flow:	$W = (a + ib)\, Z$
Source at $Z = A$:	$W = \frac{Q}{2\pi} \ln (Z - A)$
Vortex as $Z = A$:	$W = -\frac{iK}{2\pi} \ln (Z - A)$
Spiral vortex at $Z = A$:	$W = \frac{1}{2\pi} (Q - iK) \ln (Z - A)$
Source at $-A$, sink at $+A$:	$W = \frac{Q}{2\pi} \ln \frac{Z + A}{Z - A}$
Flow through an aperature:	$Z = \cosh W$
Flow past a cylinder with circulation of velocity	$W = U\left(Z + \frac{R^2}{Z}\right) - \frac{iK}{2\pi} \ln Z$
Flow at a wall angle	$W = Z^n \left(\theta = \frac{\pi}{n}\right)$

XI-1 Draw a square mesh in a two-dimensional bend such as shown on the following figure and calculate the relative pressure distribution on both boundaries and along the streamline starting from point A at the center of the upstream pipe.

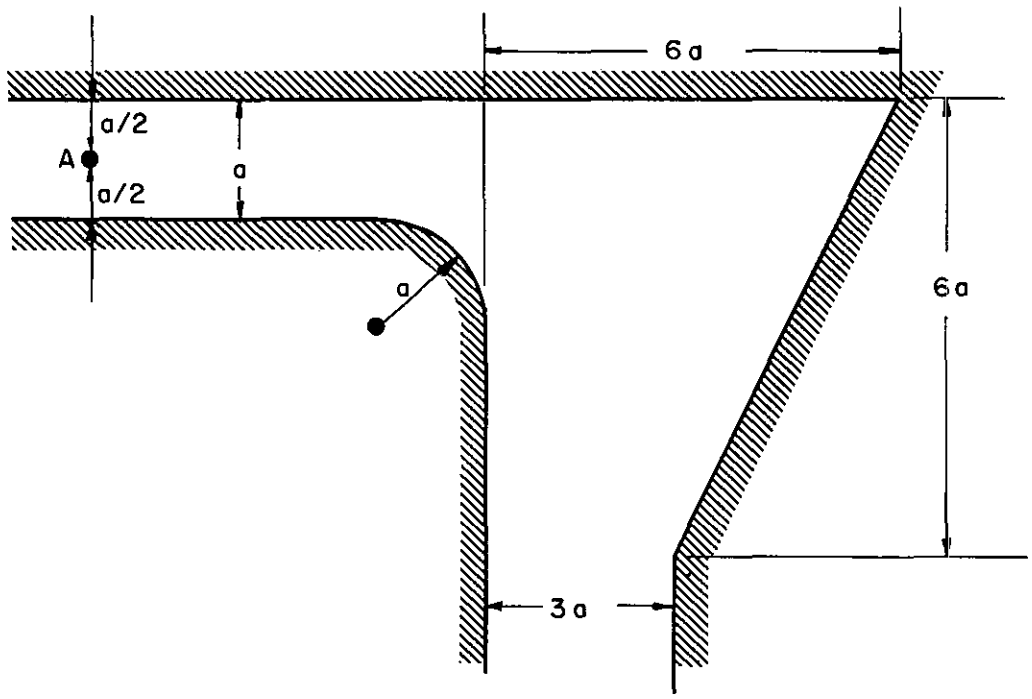

XI-2 Give the expression for the Navier-Stokes equations as a function of the stream function $\psi(x, y)$ in the case of two-dimensional motion.

Answer:

$$\rho \left[\frac{\partial^2 \psi}{\partial y\, \partial t} + \frac{\partial \psi}{\partial y} \frac{\partial^2 \psi}{\partial y\, \partial x} - \frac{\partial \psi}{\partial x} \frac{\partial^2 \psi}{\partial y^2}\right] = - \frac{\partial p^*}{\partial x} + \mu \left[\frac{\partial}{\partial y} \nabla^2 \psi\right]$$

and

$$\rho \left[- \frac{\partial^2 \psi}{\partial x \, \partial t} - \frac{\partial^2 \psi}{\partial x^2} \frac{\partial \psi}{\partial y} + \frac{\partial \psi}{\partial x} \frac{\partial^2 \psi}{\partial x \, \partial y} \right] = - \frac{\partial p^*}{\partial y} + \mu \frac{\partial}{\partial x} \nabla^2 \psi$$

XI-3 Demonstrate that the velocity potential function for a three-dimensional source is

$$\phi = - \frac{Q}{4\pi r}$$

XI-4 Determine the stream function and the potential function for a uniform flow of velocity $\vec{V}$ inclined at an angle α with the X-axis.

Answer:

$$\psi = V (y \cos \alpha - x \sin \alpha)$$

XI-5 Sketch the streamlines and equipotential lines for a flow past a cylinder of radius R. Determine the corresponding stream function.

Answer:

$$\psi = U y \left[1 - \frac{R^2}{x^2 + y^2} \right] = U \left(r - \frac{R^2}{r} \right) \sin \theta$$

XI-6 Study the various characteristics of a flow defined by the stream function

$$\psi = -x^2$$

Determine whether such a flow is rotational and calculate the vorticity. Is the fluid compressible? Plot the streamlines and the equipotential lines.

Answer:

$u = 0 \qquad v = 2x$

$\frac{\partial u}{\partial y} - \frac{\partial v}{\partial x} = -2$ (rotational); vorticity $= -1$

$\frac{\partial u}{\partial x} + \frac{\partial v}{\partial y} = 0$ (incompressible)

No equipotential line; it is a Couette flow between two parallel plates.

XI-7 Consider a uniform flow in the positive X-direction. The velocity varies linearly from $V = 0$ at $y = 0$ to $V = 10$ ft/sec at $y = 10$ feet. Determine the expression for ψ.

Answer:

$$\psi = \frac{1}{2} y^2$$

XI-8 Draw the flow pattern from a source to a sink by graphical means.

XI-9 Consider a flow around a cylinder defined by the potential function $\phi = -U(r - \frac{R^2}{r}) \cos\theta$. At which distance is the fluid velocity disturbed by the cylinder by more than 50%, 10% and 1%? Sketch these three lines of influence around the circle.

Answer:

They are circles of radii

$$r = 1.4\,R \quad (50\%)$$

$$r = 3.1\,R \quad (10\%)$$

$$r = 10\,R \quad (1\%)$$

XI-10 Consider a free surface sink vortex in which the vertical component of velocity will be neglected. Calculate the elevation of the free surface $\eta(r)$.

Answer:

$$\phi = -\frac{Q}{2\pi}\,\ell n\, r + \frac{K}{2\pi}\,\theta, \qquad \eta = \eta_\infty - \left[v_r^2 + v_\theta^2\right]\frac{1}{2g}$$

$$\eta = \eta_\infty - \frac{Q^2 + K^2}{8\pi^2 g}\,\frac{1}{r^2}$$

XI-11 Consider the potential function

$$\phi = \frac{Q}{2\pi} \ln r + \frac{K}{2\pi} \theta$$

Calculate the stream function and the general equations for equipotential lines and streamlines. Draw the corresponding flow pattern assuming that $Q = K$ and $Q = \frac{1}{4} K$ successively by means of graphical superposition.

Answer:

Equipotential lines:

$$r = e^{-\frac{K}{Q}(\theta - \theta_o)}$$

Streamlines:

$$r = e^{\frac{Q}{K}(\theta - \theta_o)}$$

$$\psi = \frac{Q}{2\pi} \theta - \frac{K}{2\pi} \ln r$$

XI-12 Demonstrate that the potential function of a doublet is

$$\phi = \frac{K \cos \theta}{r}$$

and demonstrate that streamlines and equipotential lines are circles.

Answer:

Take the potential function for a source and a sink of same

strength apart by a distance $2a$ such as

$$\phi = \frac{Q}{2\pi} [\ell n\, r_1 - \ell n\, r_2]$$

where r_1 and r_2 are measured from source and sink respectively. Insert the relationships (see the following figure):

$$r_1^2 = r^2 + a^2 - 2\, a\, r \cos\theta$$

$$r_2^2 = r^2 + a^2 + 2\, a\, r \cos\theta$$

Let $2a \frac{Q}{2\pi} = K$ and take the limit when a tends to zero.

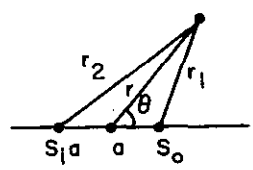

XI-13 Demonstrate that

$$d^2\Gamma = \left(\frac{V}{R} + \frac{\partial V}{\partial R}\right) dR\, d\ell \qquad \text{and} \qquad \frac{\partial H}{\partial R} = \rho g V \frac{d^2\Gamma}{dR\, d\ell}$$

where $H = \frac{V^2}{2g} + \frac{p}{\rho g} + z$, V is the particle velocity, Γ the circulation of velocity, dR an element perpendicular to to the streamlines, and $d\ell$ an element of streamlines, as shown on the following figure.

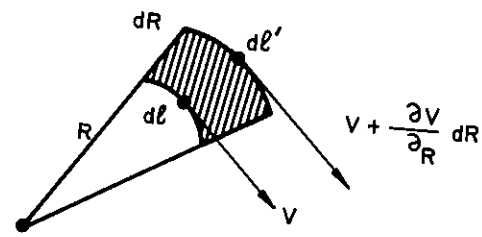

XI-14 The stream function for a flow past a cylinder with circulation of velocity is

$$\psi = U\left(r - \frac{R^2}{r}\right)\sin\theta - \frac{\Gamma}{2\pi}\,\ell n\, r$$

where Γ is the circulation. Determine the position of the stagnation points on the cylinder as a function of Γ. Demonstrate that the total force exerted by the flow per unit length of the cylinder is

$$F = \rho U \Gamma$$

<u>Answer:</u>

$$v_\theta = -\frac{\partial \psi}{\partial r}, \quad v_\theta = 0 \quad \text{where} \quad \sin\theta = \frac{\Gamma}{4\pi R U}$$

$$p = \frac{1}{2}\rho u^2\left[1 - \left(-2\sin\theta + \frac{\Gamma}{2\pi R U}\right)^2\right]$$

Total force:

$$X = -\int_0^{2\pi} p R \cos\theta \, d\theta = 0$$

$$Y = \frac{\rho U \Gamma}{\pi}\int_0^{2\pi} \sin^2\theta \, d\theta = -\rho U \Gamma$$

XI-15 Calculate the potential function for a flow past a "Rankine" body. The stream function is (see figure):

$$\psi = \frac{Q}{2\pi}(\theta_1 - \theta_2) + U r \sin\theta$$

Determine the shape of the Rankine body and calculate the pressure around it in terms of the value of the pressure at infinity p_∞.

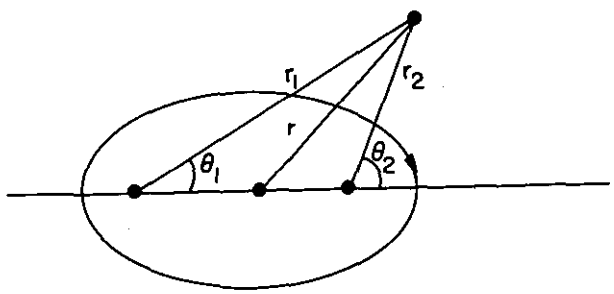

Answer:

$$\phi = \frac{Q}{2\pi} \ln \frac{r_1}{r_2} + U r \cos\theta$$

Shape:

$$\psi = 0 \quad \text{gives} \quad r = \frac{\frac{Q}{2\pi}(\theta_2 - \theta_1)}{U \sin\theta}$$

XI-16 Demonstrate by finite differences that in an irrotational flow the value of the stream function at a point (1), ψ_1 is equal to

$$\psi_1 = \frac{1}{4}(\psi_2 + \psi_3 + \psi_4 + \psi_5)$$

The subscripts i refer to point (i), as shown in the following figure.

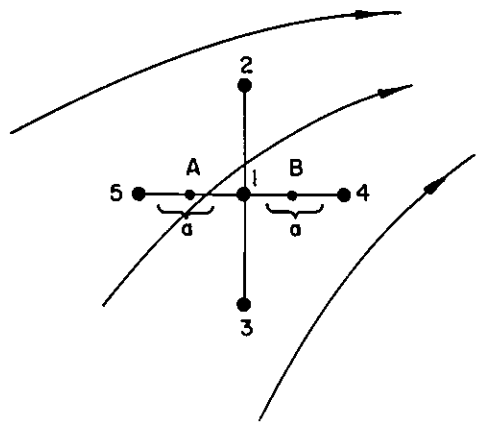

Answer:

$$\left.\frac{\partial \psi}{\partial x}\right|_A = \frac{\psi_5 - \psi_1}{a}, \qquad \left.\frac{\partial \psi}{\partial x}\right|_B = \frac{\psi_1 - \psi_4}{a}$$

$$\frac{\partial^2 \psi}{\partial x^2} = \frac{\left.\frac{\partial \psi}{\partial x}\right|_A - \left.\frac{\partial \psi}{\partial x}\right|_B}{a} = \frac{\psi_4 + \psi_5 - 2\psi_1}{a^2}$$

Similarly, $\frac{\partial^2 \psi}{\partial y^2}$ is determined. And since $\nabla^2 \psi = 0$,

one finds ψ_1

XI-17 In the case of a flow past an aperture of length $2C$ and defined by the conformal mapping transformation

$$Z = C \cosh W$$

where $Z = x + iy$ and $W = \phi + i\psi$, demonstrate that the streamlines in the z planes are defined by a family of hyperbolae and that the equipotential lines are defined by a family of ellipses of same foci.

Answer:

$$x = C \cosh \phi \cos \psi$$

$$y = C \sinh \phi \sin \psi$$

Equipotential lines (ϕ = constant)

$$\frac{x^2}{C^2 \cosh^2 \phi} + \frac{y^2}{C^2 \sinh^2 \phi} = 1$$

Streamlines (ψ = constant)

$$\frac{x^2}{C^2 \cos^2 \psi} - \frac{y^2}{C^2 \sin^2 \psi} = 1$$

Foci

$(0, C)$ and $(0, -C)$

CHAPTER XII

GENERALIZATION OF THE BERNOULLI EQUATION

XII-1 AN ELEMENTARY DEMONSTRATION OF THE BERNOULLI EQUATION FOR A STREAM TUBE

XII-1.1 DOMAIN OF APPLICATION OF THE GENERALIZED FORM OF THE BERNOULLI EQUATION

The Bernoulli equation in the case of rotational motion is valid along a streamline only. However, for practical purposes, a generalization to a stream tube of finite cross-section is required. This generalization is obtained by integration of the Bernoulli equation, which relates velocity and pressure along a streamline, over the cross-section.

This integration is valid when the main flows are roughly "unidimensional" as they are encountered in practice in a pipe, tunnel, river and channel. In these cases, it is assumed that the components of motion perpendicular to the axis of the main motion are small and have a negligible effect. This assumption permits a number of necessary approximations. However, this is a first cause of error and a first cause of difficulty when curvatures of the paths become noticeable. This limitation is not always cited in text books.

To illustrate this fact, a Venturi tube is given as an example. When the path curvatures are small (see Fig. XII-1), the generalized

Bernoulli equation has to be applied referring to the mean value of the velocity in a cross-section. The pressure distribution is roughly hydrostatic.

The pressure distribution along the wall of a Venturi tube is roughly given by the Bernoulli equation as seen in elementary hydraulics, i.e., by considering the mean velocity in the cross-section. When the path curvatures are important (see Fig. XII-2), the motion could be assumed to be irrotational in the converging part of the flow. The exact form of the Bernoulli equation has to be applied referring to the local values of velocity and pressure. The application of the generalized Bernoulli equation is impossible. It would probably be more exact to consider such a motion as irrotational and without friction, and to calculate the pressure distribution from the value of the local velocity along the wall.

A similar consideration could be made concerning the upstream part of a diaphragm. The pressure in the corner will be more exactly known by considering the flow as irrotational rather than as rotational. This difference means, in practice, that the pressure distribution is known by considering in the Bernoulli equation the local value of the velocity rather than the mean value with respect to the cross-section, as demonstrated in the following section.

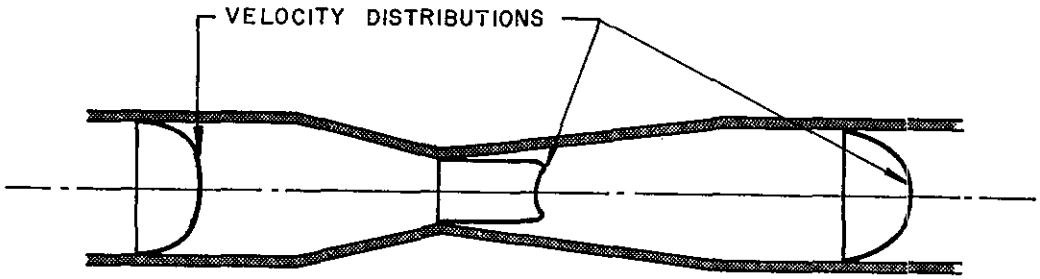

FIGURE XII-1
ROTATIONAL FLOW: GENERALIZED BERNOULLI EQUATION

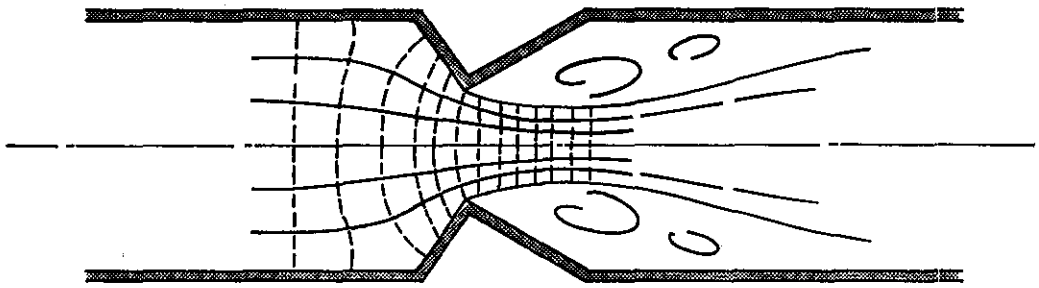

FIGURE XII-2
IRROTATIONAL FLOW: BERNOULLI EQUATION VALID LOCALLY

XII-1.2 AN ELEMENTARY DEMONSTRATION OF THE BERNOULLI EQUATION

XII-1.2.1 At first, a demonstration of the Bernoulli equation for an infinitely small stream tube of cross-section ΔA (as shown in elementary hydraulics) will be briefly recalled. In this demonstration, the velocity in a cross-section is assumed to be a constant as it would be for a stream tube of infinitely small cross-section. The flow will be considered unsteady.

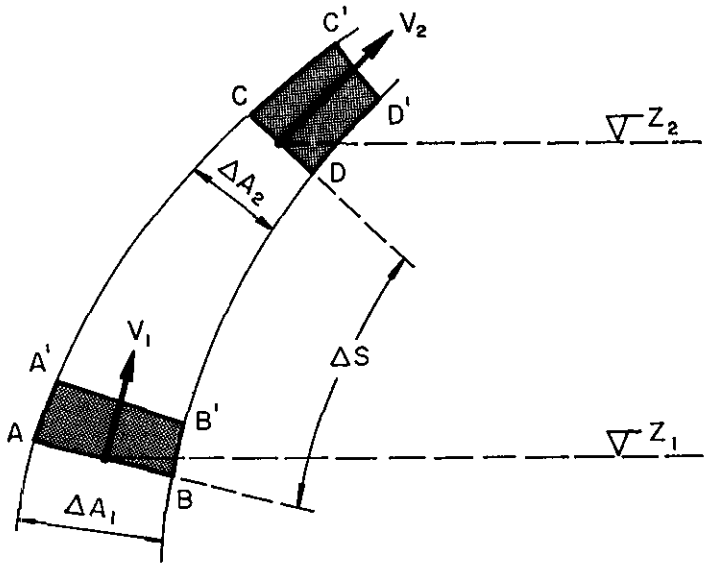

FIGURE XII-3
DEMONSTRATION OF THE BERNOULLI EQUATION IN A STREAM TUBE OF INFINITELY SMALL CROSS-SECTION

Consider a mass of fluid ABCD at time t in a stream tube (Fig. XII-3). By continuity:

$$\Delta A_1 \; V_1 \; = \; \Delta A_2 \; V_2 \; ,$$

ΔA_1 , ΔA_2 , V_1 and V_2 being the cross-sections and velocities in AB and CD respectively.

This mass of fluid ABCD becomes A'B'C'D' at time $t + dt$.

The volume AA'B'B is $\Delta A_1 \; V_1 dt$ and the volume CC'D'D is $\Delta A_2 \; V_2 dt$. By continuity:

$$\Delta A_1 \; V_1 \, dt = \Delta A_2 \; V_2 \, dt$$

XII-1.2.2 Now the variation of kinetic energy of this mass of fluid is equated to the work of the applied forces, pressure and gravity.

In case of steady motion, the kinetic energy of the common part A'B'CD remains the same, and the variation of kinetic energy is equal to the difference in kinetic energy of CC'D'D and AA'B'B that is:

$$\rho \, \Delta A_2 \; V_2 \, dt \cdot \frac{V_2^2}{2} - \rho \Delta A_1 \; V_1 \, dt \; \frac{V_1^2}{2}$$

This is the variation of kinetic energy with respect to space.

In case of unsteady motion, the total mass of fluid ABCD changes also its kinetic energy $\int_{\Delta A} \int_A^C \rho \frac{V^2}{2} \, dS \; dA$ with respect to time. This change of kinetic energy during interval dt is :

$$- \int_{\Delta A} \int_A^C \frac{\partial \left(\rho \frac{V^2}{2} \right)}{\partial t} \, dS \; dA = \rho \int_{\Delta A} \int_A^C V \frac{\partial V}{\partial t} \, dS \, dA$$

ΔA being the value of the cross-section at any place. When ΔA is a

constant between A and C, this expression becomes, with:

$$\int_{\Delta A} \int_{A}^{C} dA\, dS = \Delta A \;\; S \;:$$

$$\rho\, \Delta A \quad V^2\, dt \;\; \frac{\partial V}{\partial t}$$

XII-1.2.3 These variations of kinetic energy have to be equated to the work of applied forces - gravity and pressure - during the same interval of time.

The work of gravity force is zero for the common part A'B'CD and it is as if the mass AA'B'B were raised to CC'D'D .

The work of gravity forces is equal to (-g) times the rate at which the mass: $\rho\, \Delta A_1\, V_1\, dt$ ($= \rho \Delta A_2\, V_2\, dt$) is raised from the height z_1 to the height z_2 that is, weight x distance:

$$-\rho g \;\; \Delta A_1\, V_1\, dt \;\; z_1 \;\; + \;\; \rho g \;\; \Delta A_2\, V_2\, dt \;\; z_2$$

The pressure forces on the curved walls of the stream tube do not contribute to the work since they act in a direction perpendicular to the flow. Hence, the work of the pressure forces is limited to the activity of p_1 , and p_2 acting normally to ΔA_1 and ΔA_2 respectively, and in opposite direction. That is, Force x Distance :

$$p_1\, \Delta A_1\, V_1\, dt \;\; - \;\; p_2 \;\; \Delta A_2\, V_2 \;\; dt$$

XII-1.2.4 Equating these expressions and dividing by dt and introducing the work of the friction forces F , the generalization of the Bernoulli equation for a stream tube becomes:

$$\left(\rho \frac{V_2^2}{2} + p_2 + \rho g z_2\right) \Delta A_2 V_2 - \left(\rho \frac{V_1^2}{2} + p_1 + \rho g z_1\right) \Delta A_1 V_1 =$$

$$\rho \int_{\Delta A} \int_A^C V \frac{\partial V}{\partial t} \, dS \, dA + F$$

Since, $\Delta A_2 V_2 = \Delta A_1 V_1 = \Delta AV$ by continuity, dividing by ΔAV and neglecting the friction force leads to the previously seen form of the Bernoulli equation valid along a streamline, which is consistent: (see Chapter X-3.3)

$$\left(\rho \frac{V_2^2}{2} + p_2 + \rho g z_2\right) - \left(\rho \frac{V_1^2}{2} + p_1 + \rho g z_1\right) = \rho \int_A^C \frac{\partial V}{\partial t} \, dS$$

and dividing by ρg and introducing the definition of the total head H :

$$H = \frac{V^2}{2g} + \frac{p}{\rho g} + z$$

$$\frac{\partial H}{\partial S} + \frac{1}{g} \frac{\partial V}{\partial t} = 0$$

XII-1.2.5 The application of the Bernoulli equation as given above for a pipe is very simple. It is this form which is used in engineering practice. However, in order to show all the simplifications which are required

for this generalization, it has been judged useful to give a more rigorous demonstration involving a number of correcting factors. These correcting factors are most often neglected and not very well known. Fortunately, they are effectively negligible for the accuracy required in engineering. However, it will be seen that the Bernoulli equation, which is too often presented as an exact formula in elementary hydraulics, is in fact only approximate.

XII-1.3 MEAN VELOCITY IN A CROSS-SECTION

Consider a cross-section of a stream tube defined as being perpendicular to streamlines. In this cross-section, the velocity generally varies both with respect to space and with respect to time, which is due to turbulence (see Figure XII-4).

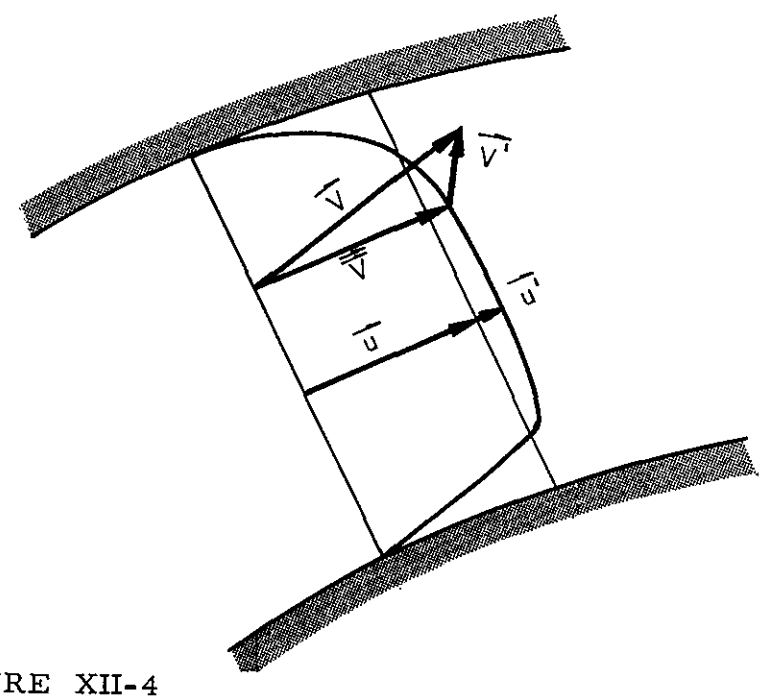

FIGURE XII-4
MEAN VELOCITY IN A CROSS-SECTION

Hence, the mean discharge has to be defined by a double integration with respect to space and time:

$$Q = \frac{1}{T} \int_o^T \iint_A \vec{V} \, dA \; dT$$

the mean velocity being:

$$\vec{U} = \frac{\vec{Q}}{A} = \frac{1}{T} \int_o^T \frac{1}{A} \iint_A \vec{V} \, dA \, dT$$

It has been seen in the theory of turbulence (Chapter VII-1.3) that at a given point

$$\vec{V} = \overline{\vec{V}} + \vec{V'}$$

with:

$$\overline{\vec{V}} = \frac{1}{T} \int_o^T \vec{V} \, dT \qquad \text{and} \qquad \overline{\vec{V'}} = \frac{1}{T} \int_o^T \vec{V'} \, dT = 0$$

Similarly, consider the variation of the mean value $\overline{\vec{U}}$ of $\overline{\vec{V}}$ with respect to the cross-section. $\vec{U}$ may be defined:

$$\vec{U} = \frac{1}{A} \iint_A \overline{\vec{V}} \, dA$$

such that $$\overline{\vec{V}} = \vec{U} + \vec{U'}$$

where U' is a fluctuation value, either positive or negative, but its total sum equals zero:

$$\overline{\vec{U'}} = \frac{1}{A} \iint_A \vec{U'} \, dA = 0$$

The greatest value of $|\vec{U'}|$ is $|\vec{U}|$ at a wall boundary.

Combining these definitions gives:

$$\vec{V} = \vec{\bar{V}} + \vec{V'} = \vec{U} + \vec{U'} + \vec{V'}$$

in which:

$$\frac{1}{A} \iint_A \vec{U'}\, dA = 0 \quad \text{and} \quad \frac{1}{T} \int_0^T \vec{V'}\, dT = 0$$

But it has to be noted that $\overline{U'^2}$ and $\overline{V'^2}$ are always positive.

It is simpler in the following calculation to use coefficient factors σ and χ defined by $\vec{U'} = \sigma\vec{U}$ and $\vec{V'} = \chi\vec{U}$

such that: $$\vec{V} = \vec{U}\,(1 + \sigma + \chi)$$

It may be noted that while σ is a constant with respect to time, χ may change with respect to space in case of non-isotropic turbulence. Hence, the mean value of χ will have to be taken with respect to both space and time.

This correction factor χ, caused by turbulence, would be directly obtained from the Reynolds' equation by considering the ratio of the fluctuating terms and convective inertia terms. It is generally neglected in hydraulics.

XII-2 GENERALIZATION OF THE BERNOULLI EQUATION TO A STREAM TUBE

XII-2.1 AVERAGING PROCESS TO A CROSS-SECTION

The principal of conservation of energy applied to an elementary stream tube of infinitesimal cross section A is given by following the formula demonstrated in XII-1.2. The fact that the cross section is infinitesimal makes this formula exact, since such cross section is actually

a streamline.

$$\left(\rho \frac{V_2^2}{2} + p_2 + \rho g z_2\right) V_2 dA_2 - \left(\rho \frac{V_1^2}{2} + p_1 + \rho g z_1\right) V_1 dA_1 -$$

$$\int_A^c \rho V \frac{\partial V}{\partial t} dS\, dA - F = 0$$

Since this sum is always equal to zero for one streamline at a given time, its mean value with respect to time is always equal to zero also. (This operation is the same as that used to establish the Reynolds' equations from the Navier-Stokes equations (see VII-1.6).)

Similarly, its mean value with respect to a finite cross section A should always equal zero, and this operation is written:

$$\frac{1}{A} \iint_A (*)\, dA = 0$$

where (*) is the above total sum. Now if instead of taking the mean value with respect to the cross section, one takes the total value $\iint_A (*)\, dA$: it is also always equal to zero. And taking both the total value by an integration to the cross section A and the mean value with respect to time leads to:

$$\frac{1}{T} \int_o^T \iint_A \left[\left(\rho \frac{V^2}{2} + p_2 + \rho g z_2\right) V_2 dA_2 - \left(\rho \frac{V_1^2}{2} + p_1 + \rho g z_1\right) V_1 dA_1 - \right.$$

$$\left. \rho \int_A \frac{\partial V}{\partial t} V\, dS\, dA - F \right] dT = 0$$

In the following each of these terms will be successively considered.

XII-2.2 VELOCITY HEAD TERMS

Introducing the value of V as a function of U, the velocity head term becomes successively:

$$\frac{1}{T}\int_o^T\iint_A \rho\,\frac{V^2}{2}\,V\,dA\,dT = \frac{\rho}{2}\,\frac{1}{T}\int_o^T\iint_A U^3\,(1+\sigma+\chi)^3\,dA\,dT =$$

$$\rho\,\frac{U^3}{2}\left[A + 3\,\frac{1}{T}\int_o^T\iint(\sigma+\chi)\,dA\,dT + 3\,\frac{1}{T}\int_o^T\iint_A(\sigma+\chi)^2\,dA\,dT\right]$$

σ and χ being usually small, $(\sigma+\chi)^3$ has been neglected.

Now considering these integrals successively, since σ varies only with space while χ varies with both space and time, the first integral becomes:

$$\frac{1}{T}\int_o^T\iint_A(\sigma+\chi)\,dA\,dT = \iint_A \sigma\,dA + \iint_A \frac{1}{T}\int_o^T \chi\,dT\,dA = 0$$

and similarly the second integral becomes:

$$\frac{1}{T}\int_o^T\iint_A(\sigma+\chi)^2 dA\,dT = \iint_A \sigma^2\,dA + \iint_A \frac{1}{T}\int_o^T \chi^2\,dT\,dA \neq 0$$

(Since the double product term $2\iint_A \sigma\,dA\,\frac{1}{T}\int_o^T \chi\,dT \equiv 0$)

These last two terms are different from zero and are always positive. The notation $\overline{\sigma^2}$ and $\overline{\chi^2}$ will be employed such that:

$$\overline{\sigma^2}\ A = \iint_A \sigma^2\ dA$$

$$\overline{\chi^2}\ A = \iint_A \frac{1}{T} \int_o^T \chi^2\ dT\ dA$$

And finally:

$$\frac{1}{T} \int_o^T \iint_A \rho\ \frac{V^2}{2}\ V\,dA\,dT = \rho\ \frac{U^3 A}{2} (1 + 3\overline{\sigma^2} + 3\ \overline{\chi^2}) = (1+\alpha)\ \rho\ \frac{U^2}{2}\ Q$$

with

$$\alpha = 3\overline{\sigma^2} + 3\overline{\chi^2}$$

For laminar flow in a circular pipe:

$$3\overline{\chi^2} = 0$$

and as found in elementary hydraulics:

$$3\overline{\sigma^2} = 1$$

For turbulent flow:

$$3\overline{\chi^2} \cong 0.05$$

$$3\overline{\sigma^2} \cong 0.05 \text{ to } 0.01$$

XII-2.3 PRESSURE TERMS

Now consider the pressure terms

$$\frac{1}{T} \int_o^T \iint_A p^*\ V\ dA\ dT$$

Because of turbulence:

$$p^* = \overline{p^*} + p' = \overline{p^*}\,(1 + \pi)$$

where $\pi = \dfrac{p'}{\overline{p^*}}$ and $\overline{p^*} = \dfrac{1}{T}\displaystyle\int_o^T p^*\,dT = 0$

Introducing this value:

$$\frac{1}{T}\int_o^T \iint_A \overline{p^*}\,U(1 + \pi)\,(1 + \sigma + \chi)\,dA\,dT =$$

$$\overline{p^*}\;U\left[A + \frac{1}{T}\int_o^T \iint_A (\sigma\,\pi + \chi\,\pi)\,dA\,dT\right]$$

The mean values of the products $\sigma\,\pi$ and $\chi\,\pi$ are different from zero. However, the correction caused by π is so small that it is usually neglected.

The Bernoulli equation is sometimes generalized for some curved flows at free surface, such as flow over a weir. In this case, $\overline{p^*}$ may be considered as the sum of a hydrostatic term, the value of which is $(p_a + \rho\,gz)$ and an additional term Δp . This additional term is zero when the curvatures of the paths are small, but becomes important in some cases, which causes a correction factor δ such that:

$$\delta = \frac{1}{A}\iint_A \frac{\Delta p}{\overline{p^*}}\,V\,dA$$

$$\iint_A \overline{p^*}\,V\,dA = \overline{p^*}\,UA(1 + \delta)$$

δ being positive in case of flow in the positive direction with a curvature upwards, and negative when curved downwards. These facts have been illustrated in the previous chapters by Figs. X-2, X-3 and X-4.

XII-2.4 GRAVITY TERMS

Similarly, the gravity term is easily found to be:

$$\frac{1}{T} \int^{T} \iint_{A} \rho g z \; V \, dA \, dT = \rho g z \; UA = \rho g z \, Q$$

since all the correction factors appear to be of the first degree and have a mean value of zero.

XII-2.5 LOCAL INERTIA TERMS

Lastly, consider the local inertia term:

$$\frac{1}{T} \int_{o}^{T} \iint_{A} \int_{S} \rho \frac{\partial V}{\partial t} \; V \, dA \, dT \, dS$$

It may be written successively:

$$\rho \frac{\partial}{\partial t} \frac{1}{T} \int_{o}^{T} \iint_{A} \int_{S} \frac{V^2}{2} \, dA \, dT \, dS =$$

$$\rho \int_{S} A \frac{\partial \frac{U^2}{2}}{\partial t} \frac{1}{T} \int_{o}^{T} \iint_{A} \left[1 + 2(\sigma + \chi) + (\sigma + \chi)^2\right] dA \, dT \, dS$$

Simplifying as previously seen, it becomes:

$$\rho \int_{S} A \frac{\partial \frac{U^2}{2} (1 + \overline{\sigma}^2 + \overline{\chi}^2)}{\partial t} \, dS = \rho A \left(1 + \frac{\alpha}{3}\right) U \frac{\partial U}{\partial t}$$

XII-2.6 PRACTICAL FORM OF THE BERNOULLI EQUATION FOR A STREAM TUBE

Taking account of the above correction factors, and dividing by $Q = UA$, the generalized form of the Bernoulli equation for a stream tube is:

$$\left(\rho \frac{U_2^2}{2}(1+\alpha_2) + \overline{p}_2(1+\delta_2) + \rho g z_2\right) - \left(\rho \frac{U_1^2}{2}(1+\alpha_1) + \overline{p}_1(1+\delta_1) + \rho g z_1\right) =$$

$$\rho \int_S \frac{\partial U}{\partial t}\left(1 + \frac{\alpha}{3}\right) dS + F$$

If σ^2 and χ^2 and δ are neglected, dividing by ρg leads to the common form of the Bernoulli equation used in engineering practice:

$$\left(\frac{U_2^2}{2g} + \frac{\overline{p}_2}{\rho g} + z_2\right) - \left(\frac{U_1^2}{2g} + \frac{\overline{p}_1}{\rho g} + z_1\right) = \frac{1}{g}\int_S \frac{\partial U}{\partial t} dS + F$$

In the case of a uniform flow in a pipe of length L, the local inertia term becomes:

$$\frac{1}{g}\int_S \frac{\partial U}{\partial t} dS = \frac{L}{g}\frac{dU}{dt}$$

This is the formula which must be used to study, for example, surge tanks, locks, etc.

XII-2.7 AN APPLICATION TO SURGE TANK

Because of its importance in engineering practice, an example of the generalized Bernoulli equation for unsteady motion is given. The

case of a surge tank in the case where the discharge in the penstoke is nil as presented in Fig. XII-5 is analyzed. The application of the Bernoulli equation between points a and b gives:

$$\left(\frac{V_a^2}{2g} + \frac{p_a}{\rho g} + z_a\right) - \left(\frac{V_b^2}{2g} + \frac{p_b}{\rho g} + z_b\right) = (\text{Head Loss})_{ab} + \frac{1}{g}\int_a^b \frac{\partial V}{\partial t}\, dL$$

$\frac{V_a^2}{2g}$ is negligible since V_a in the reservoir is very small. $\frac{V_b^2}{2g}$ is also very small and is usually neglected. Moreover, $p_a = p_b =$ atmospheric pressure. The head loss term includes the head loss at the entrance of the gallery, the head loss in the gallery $\Delta H = \frac{f V^2}{2gD}$, and the head loss due to the bottom diaphragm of the surge tank $\frac{KV_d^2}{2g}$. The head loss in the surge tank is usually negligible as is $\frac{V_b^2}{2g}$.

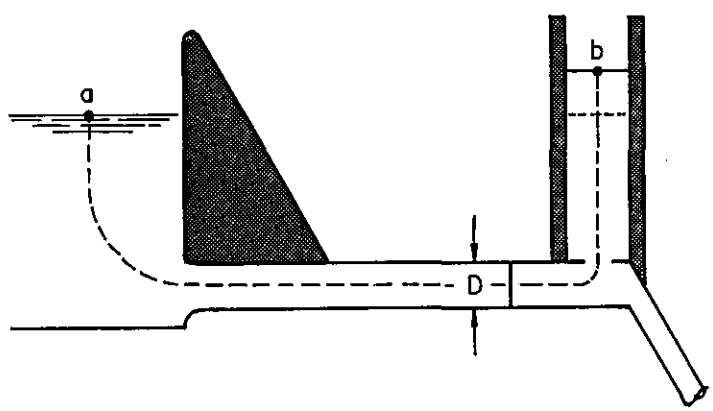

FIGURE XII-5
SURGE TANK

The local inertia term is usually small enough in the reservoir and in the surge tank to be neglected. It is taken into account in the gallery only.

Hence,

$$\frac{1}{g} \int_a^b \frac{\partial V}{\partial t} \, dL = \frac{L}{g} \frac{dV}{dt} = \frac{L}{gf} \frac{dQ}{dt}$$

where f is the cross section of the gallery. In the case of a relatively short gallery, the value for L could be increased by a correction factor to take into account the local inertia of the almost-radial flow near the entrance. Finally, with $Z = z_a - z_b$, the basic dynamic equation for studying a surge tank is:

$$Z = \left[\frac{f}{D} + K_{a-b}\right] \frac{V^2}{2g} + \frac{L}{gf} \frac{dQ}{dt}$$

where K_{a-b} is a friction coefficient for singularities between a and b. The continuity is $Q\,dt = F\,dZ$, F being the cross-section at the free surface of the surge tank. This book will not develop a method of solution for this system of equations established in assuming no discharge in the penstoke.

XII-3 LIMIT OF APPLICATION OF THE TWO FORMS OF THE BERNOULLI EQUATION

XII-3.1 THE TWO FORMS OF THE BERNOULLI EQUATION

In the case of steady flow without friction, two forms of the Bernoulli equation are almost identical:

$$\frac{V^2}{2g} + \frac{p}{\rho g} + z = \text{constant}$$

$$(1 + \alpha) \frac{U^2}{2g} + \frac{p}{\rho g} + z = \text{constant}$$

Strictly speaking, neither of these equations are valid in any case since the conditions required for establishment of the Bernoulli equation can only be approximated. However, they are essential in many cases. In these cases, it is important to remember the following assumptions.

The first form of the Bernoulli equation is valid for irrotational flow, that is in convergent flow through short structures. V is the local velocity. In case of turbulence, V is replaced by the mean local velocity with respect to time: $\overline{V}$. The streamlines may be curved but V must never be taken as the mean velocity in a cross-section.

The pressure distribution is given as a function of the local value of V and z . The pressure distribution at the walls is very close to the pressure distribution at the limit of thin boundary layers.

The second form of the Bernoulli equation is valid for unidimensional flow where the motion is rotational, but the curvatures of the paths must be small. U refers to the mean velocity in the cross-section, and the kinetic head $\frac{U^2}{2g}$ must be affected by a correction factor $(1 + \alpha)$ which is often neglected in practice. α is due to turbulence and to the variation of the velocity in a cross-section.

The pressure distribution is hydrostatic in a cross-section, or more exactly, very slightly smaller in the center of the flow than at the boundary because of the turbulent fluctuations (see Sections VIII-2.2 and VIII-2.3). The pressure distribution from one cross-section to another varies as a function of the square mean velocity in these cross-sections U^2.

XII-3.2 VENTURI AND DIAPHRAGM AS MEASURING DEVICES

In practice it is difficult to know the exact value of the correction factor α . Moreover, a number of assumptions such as small curvature of the paths, negligible head loss, etc. , are not always satisfied.

It must be understood, therefore, that a Venturi used as a device to measure a discharge by a simple application of the Bernoulli equation without correction factors is not an accurate device in itself. It is for this reason that manufacturers must give a corrective curve obtained experimentally by measuring the discharge in a calibrated tank. An overall correction factor, which differs for each kind of Venturi, must be given as a function of the Reynolds' number at the throat.

A similar statement could be made for a diaphragm where the upstream pressure distribution could preferably be given by considering the local value of the velocity rather than the mean value in a cross-section. The downstream pressure distribution is roughly hydrostatic, since the flow is either almost parallel or very slow out of the vena contracta. (See Fig. XII-6)

XII-3.3 EXPERIENCE OF BANKI

The application of the Bernoulli equation to a Venturi is well-known. Despite the approximations which have been indicated previously, it is effectively verified that when V increases in the convergent, p^* decreases as $\sqrt{V}$, and conversely, p^* increases also as $\sqrt{V}$ in the divergent. If the divergent is too rapid, the flow separates and

p^* is almost a constant around the jet. This is also the case of a jet arriving in a reservoir (see Figure XII-6, Section 5).

Now, one can question whether any change of p^* also changes V according to the Bernoulli equation. This could be realized by an experiment, initially conducted by Banki, where the pressure variations are transmitted to the inside flow of a pipe through a membrane (see Figure XII-7). When the pressure within the tank increases, the pressure, transmitted through the membrane in the pipe, also increases; hence V decreases, and the rubber membrane expands. Also, when the pressure within the tank decreases, V increases and the rubber membrane contracts. This paradoxical result is in accordance with the Bernoulli equation. However, this experience is difficult to realize because of flow separation. This fact also demonstrates the inherent deficiencies of the Bernoulli equation applied to a stream tube. Finally, the change in the rubber shape changes the flow discharge in the pipe and the motion is unstable. It is really a problem of hydroelasticity.

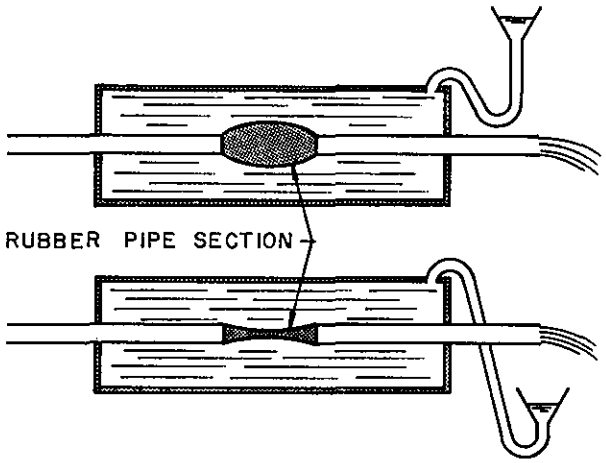

FIGURE XII-7
EXPERIENCE OF BANKI

XII-4 DEFINITION OF HEAD LOSS

XII-4.1 STEADY UNIFORM FLOW

Consider the case of steady flow in a pipe. The head loss may be calculated by theory in a number of cases where the flow is laminar and the cross-section is of simple shape, such as circular or square. But in the case of turbulent flow, the value of head loss cannot be obtained by theory and must be measured by experiment.

In this case, the only theoretical purpose of the Bernoulli equation

$$\left[(1+\alpha_1)\frac{U_1^2}{g} + \frac{p_1^*}{\rho g}\right] - \left[(1+\alpha_2)\frac{U_2^2}{g} + \frac{p_2^*}{\rho g}\right] = \Delta H$$

is to define the value of the head loss ΔH between two considered points by the difference between the total heads at these points. This does not present any difficulty as long as the flow is uniform, since in this case

$$\alpha_1 = \alpha_2 , \quad U_1 = U_2 , \quad \text{and} \quad \Delta H = \frac{p_1^*}{\rho g} - \frac{p_2^*}{\rho g}$$

XII-4.2 HEAD LOSS AT A SUDDEN CHANGE IN THE FLOW

A sudden change in a uniform pipe, such as caused by a diaphragm or a bend, has an effect on the downstream flow at a great distance from it. The head loss due to this change may be obtained by extrapolating the pressure lines as shown by Fig. XII-8. (A pressure value given by a piezometer located near a discontinuity, a bend or an intake has no value in evaluating the head loss because the flow is not uniform. The pressure is locally influenced by a complex flow pattern.)

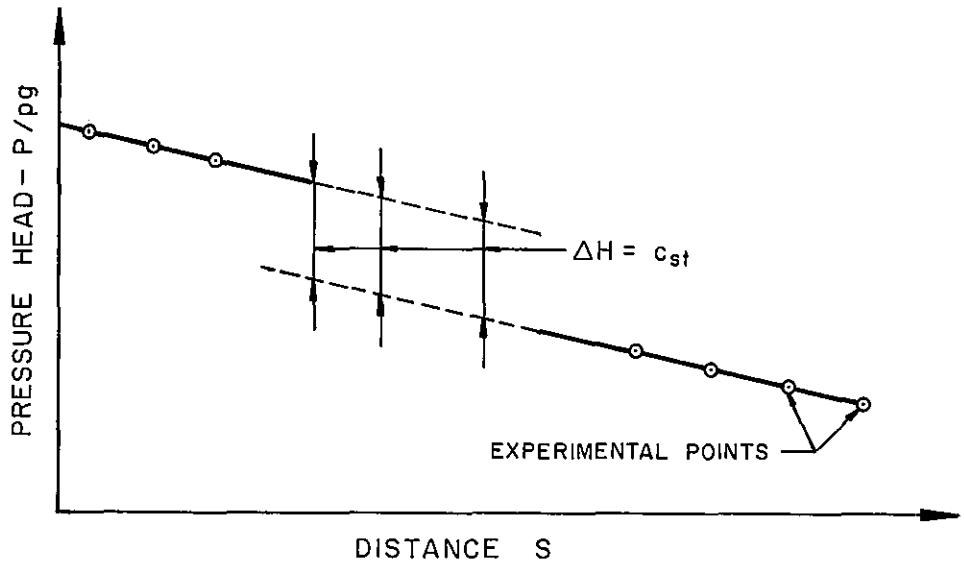

FIGURE XII-8
THE HEAD LOSS ΔH CAUSED BY A SINGULARITY OR SUDDEN SUDDEN CHANGE IN A UNIFORM PIPE IS WELL-DEFINED BY EXTRAPOLATION

But, in the case of non-uniform flow, it is more difficult since $\frac{U_1^2}{2g}$ is different from $\frac{U_2^2}{2g}$ and particularly α_1 is different from α_2 and they are unknowns and vary with U. Even if they are considered as known, the definition of such a head loss involves lack of accuracy as evidenced by Figure XII-9. Moreover, it is impossible to separate the value of head loss in a close succession of such sudden changes. Because of their interaction, a linear addition of the various head losses is not valid.

XII-4.3 HEAD LOSS IN A FREE SURFACE FLOW

It is interesting to note that any change in a free-surface flow gives no extra head loss. Indeed, the initial upstream level and downstream level are always the same provided the considered cross-sections are far enough from the discontinuity as is illustrated by Fig. XII-10. The increase of head loss in one place is always compensated by a decrease of head loss in another place. Hence, the head loss definition of a discontinuity or sudden change in a free-surface flow, such as that caused by a grid, must be specified by the relative location of two cross-sectional planes between which the head loss is considered.

The case of Fig. XII-10 is in fact slowly modified because of the modification due to the transport of solid matter, as is shown by Figs. XII-11 and XII-12.

It is out of the scope of this book to investigate the problem of backwater curve with movable bed.

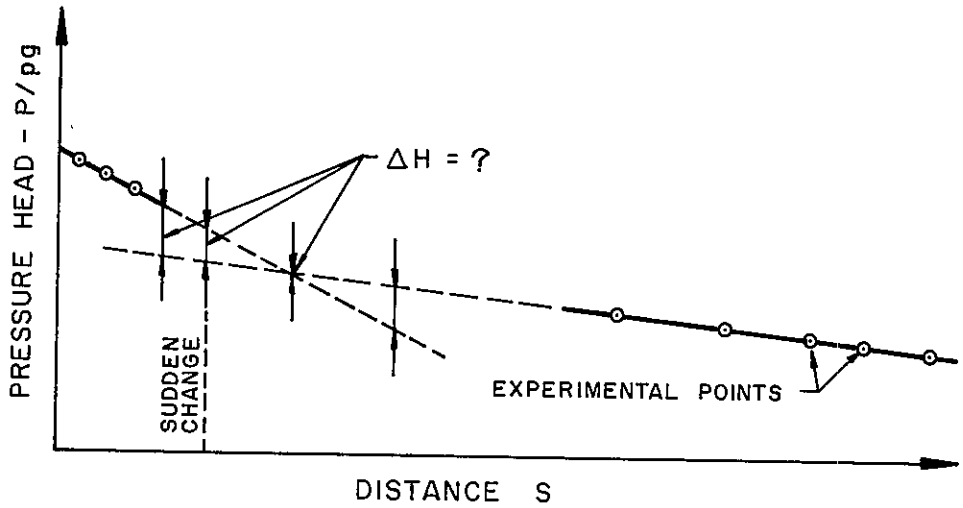

FIGURE XII-9
THE HEAD LOSS CAUSED BY A SUDDEN CHANGE IN FLOW IN A NON-UNIFORM FLOW IS SUBJECT TO VARIOUS INTERPRETATIONS

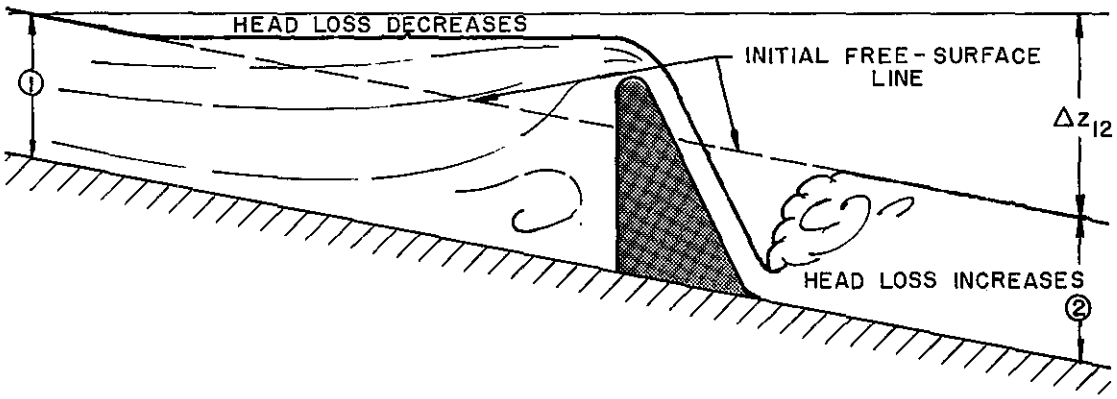

FIGURE XII-10
A DISCONTINUITY IN A FLOW AT FREE SURFACE DOES NOT CHANGE THE TOTAL VALUE OF THE HEAD LOSS Δz_{12}

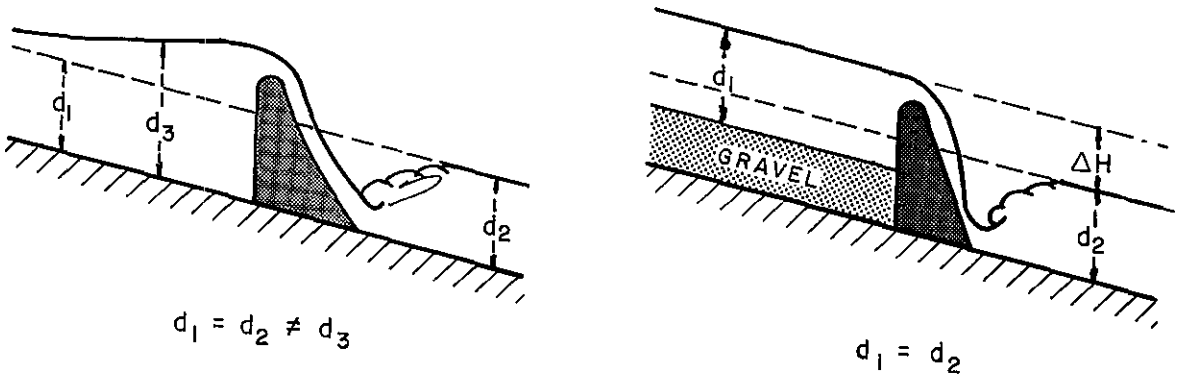

FIGURE XII-11
SMALL DAM

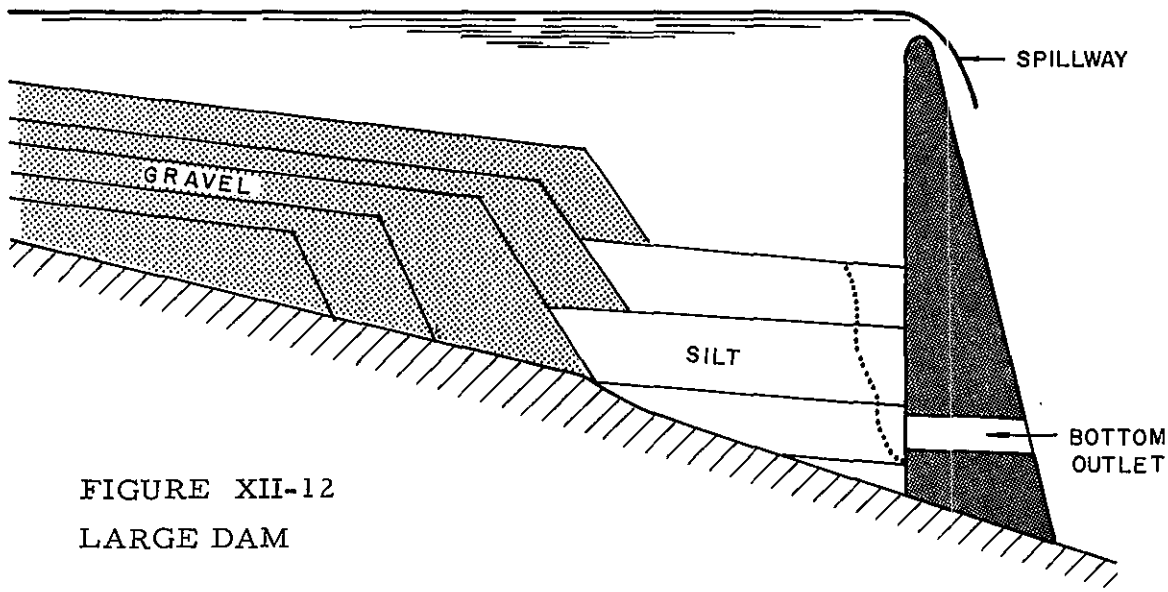

FIGURE XII-12
LARGE DAM

XII-4.4 EFFECT OF LOCAL INERTIA ON HEAD LOSS

By having an effect on the velocity distribution in a pipe, and on the corresponding shear stress, local inertia has an important effect on the value of the head loss (see Fig. XII-13).

Head loss in a given flow at a given time cannot theoretically be considered as equal to the value of the head loss of the steady flow which would have the same instantaneous value of mean velocity.

The head losses for the same value of the mean velocity are different for steady flow, accelerated flow, and decelerated flow. This may also be noticeable for a discontinuity like the bottom orifice of a surge tank, where the flow pattern is influenced by an instability phenomenon.

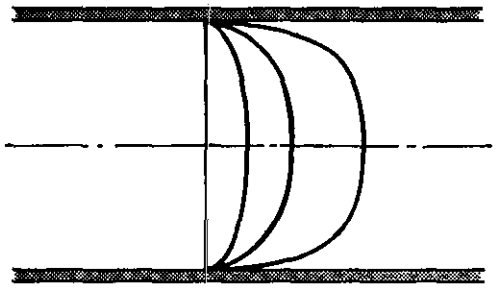

Steady Flow

Velocity Distributions
for Various Discharges

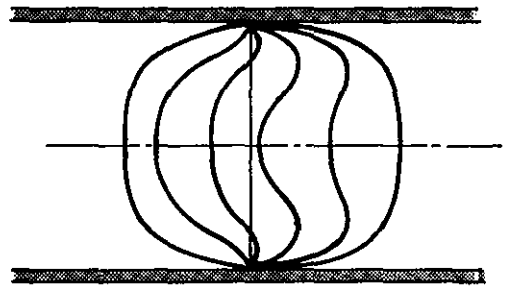

Unsteady Flow

Accelerated and Decelerated

Velocity Distributions at Various
Time

FIGURE XII-13

A COMPARISON OF VELOCITY DISTRIBUTIONS IN A PIPE

However, due to lack of experimental data, unsteady flows are often studied with a head loss given by an empirical law which was experimentally obtained in the case of steady flow. As in the case of steady flow the Bernoulli equation may be used to define the head loss in an unsteady flow, but even more difficulties are encountered in determining the head loss experimentally in unsteady flow than in steady flow.

XII-1 Two adjacent tanks have horizontal cross sections S_1 and S_2 respectively. The difference of level between these two tanks at time $t = 0$ is $h_1 - h_2 = h$. An orifice of cross section A is open between the two tanks at time $t = 0$. The discharge coefficient of the orifice is 0.6. Give the expression for the time T after which the level in the two tanks is the same.

Answer:

$$T = \frac{S_1 S_2}{S_1 + S_2} \frac{\sqrt{h}}{0.3 A \sqrt{2g}}$$

XII-2 Consider four reservoirs, A, B, C, and D, connected together as shown on the following figure (not scaled) in which the level is maintained at:

A: $z_A = 60$ feet B: $z_B = 40$ feet

C: $z_C = 50$ feet D: $z_C = 10$ feet

respectively. The pipe between A and B is 10 inches in diameter and 3000 feet long. The pipe between C and D is 12 inches in diameter and 6000 feet long, and finally, the connecting pipe MN is 5500 feet long, M being 1000 feet from reservoir A, and N being 2000 feet from reservoir D. The friction coefficients f of these pipes are: 0.20 for the 10

inch and the 12 inch diameter pipes, and 0.224 for the pipe between M and N. The diameter of the pipe MN is such that the discharge through MN is 1.2 ft^3/sec. Determine the discharges between AM, MB, CN, and ND and the diameter of the pipe MN.

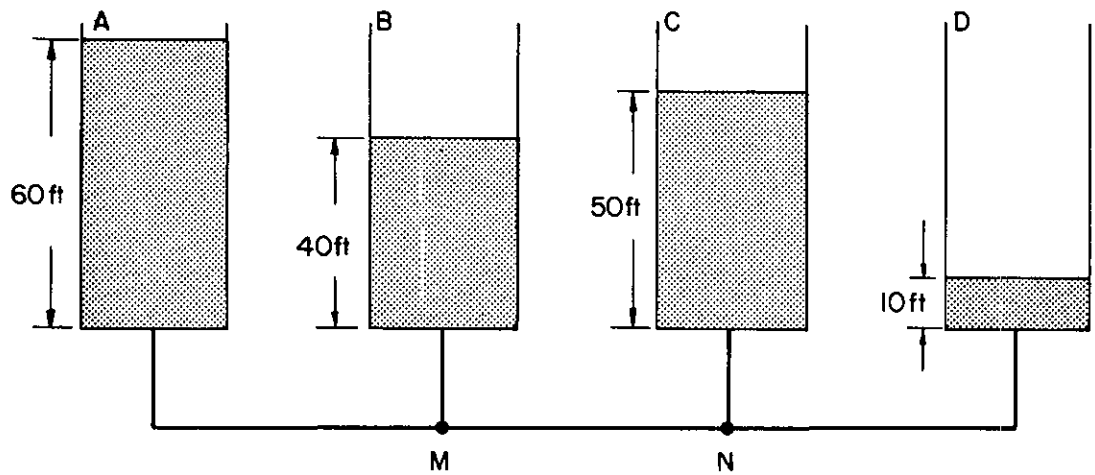

Answer:

$$Q_{AM} = 3.05 \ ft^3/sec$$

$$Q_{MB} = 1.85 \ ft^3/sec$$

$$Q_{CN} = 3.2 \ ft^3/sec$$

$$Q_{ND} = 4.4 \ ft^3/sec$$

XII-3 Consider a hydroelectric installation including a large reservoir where the level remains practically constant, a horizontal gallery

of length L and circular cross section f, a surge tank of horizontal cross section F and a penstoke as shown in the following figure. The head loss in the gallery is $P = \pm P_o \left(\frac{W}{W_o}\right)^2$ where W is the average water velocity as a function of time, and subscript o refers to steady state conditions.

1) Demonstrate that the governing equation for the elevation z in the surge tank is:

$$\frac{LF}{gf}\frac{d^2 z}{dt^2} + z + P = 0$$

2) Give the period of oscillation of the motion in the gallery. (P will be neglected for this calculation.)

3) Give the amplitude of oscillation of z in the surge tank in the case where the initial discharge $Q_t = f W_a$ is suddenly stopped to a zero value and to a smaller value $Q'_t = f W'_a$. (P will again be neglected.) Explain qualitatively the influence of P.

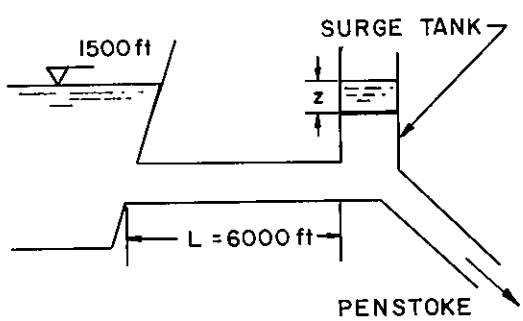

Answer:

2) $$T = 2\pi \sqrt{\frac{L F}{g f}}$$

3) $$z = (W_a - W_a') \sqrt{\frac{L f}{g F}} \sin \frac{2\pi t}{T}$$

XII-4 Establish the basic equations of motion for unsteady flow in parallel pipes and in series.

XII-5 Establish the equation of motion caused by the sudden opening of a gate for a manifold such as shown in the following figure.

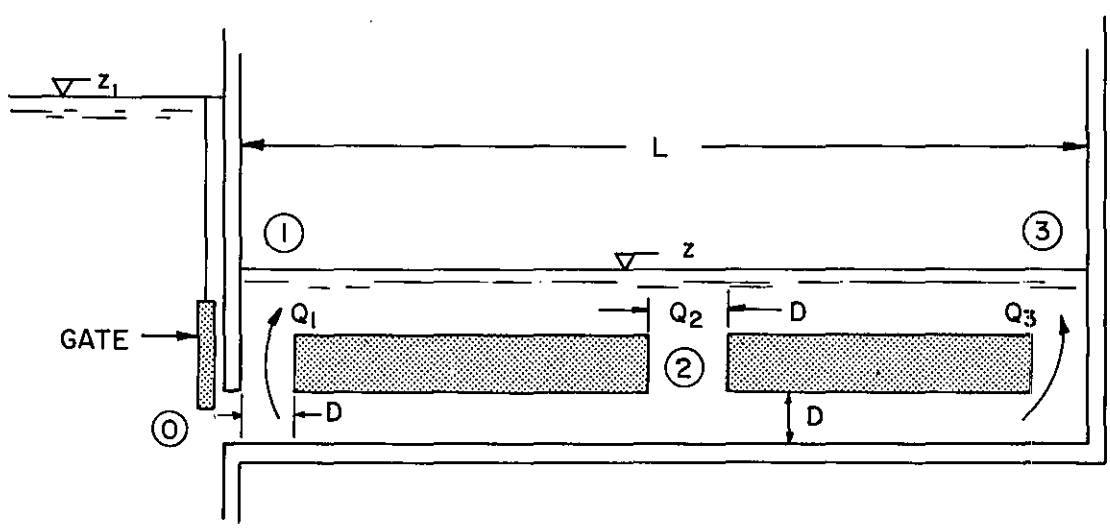

Answer:

$$L\,dz = (Q_1 + Q_2 + Q_3)\,dt$$

$$z_1 = z + \frac{Q_1^2}{2\,g\,D^2} + K_{o-1}\,\frac{(Q_1 + Q_2 + Q_3)^2}{2\,g}$$

$$z_1 = z + \frac{Q_2^2}{2\,g\,D^2} + K_{o-2}\,\frac{(Q_2 + Q_3)^2}{2\,g} + \frac{L}{2\,g\,D}\,\frac{d\,(Q_2 + Q_3)}{dt}$$

and so on.

K = coefficient for head loss

CHAPTER XIII

THE MOMENTUM THEOREM AND ITS APPLICATIONS

XIII-1 EXTERNAL FORCES AND INTERNAL FORCES

XIII-1.1 THE CASE OF AN ELEMENTARY FLUID PARTICLE

The momentum equation $\vec{F} = m\frac{d\vec{V}}{dt}$ has been expressed in differential form for an elementary fluid particle of unit volume and mass ρ (see Chapter VI). One may recall that this momentum equation takes the form of the Navier-Stokes equation equating the inertia force of a unit volume with the corresponding applied forces.

The applied forces have been divided into external and internal forces (see Chapter V). The internal forces are due to pressure and friction. They are by definition vectorially equal to zero and do not contribute to a net torque on the considered particle. This definition is based upon Newton's Third Law stating that action equals reaction.

The external forces are divided into surface forces due to pressure and friction, and a body force due to gravity. These forces have a total sum different from zero and hence impart a motion to the elementary fluid particle.

XIII-1.2 MOTION OF TWO ADJACENT ELEMENTARY FLUID PARTICLES

Consider two adjacent fluid particles as shown in Figure XIII-1. The external forces acting on the two adjacent sides sum vectorially to zero according to Newton's Third Law as previously stated. Hence only the external forces acting on the outer limits of this group of two elementary fluid particles affect their overall motion. Therefore, consideration of these external forces permits a theoretical analysis of the overall motion of these two particles together, but does not permit an analysis of the relative motion of the one particle with respect to the other.

XIII-1.3 GENERALIZATION FOR A DEFINITE MASS OF FLUID

By generalization for a definite mass of fluid composed of an infinite number of elementary fluid particles, all internal forces sum to zero and produce no net torque on the definite mass of fluid. The overall motion of this mass of fluid depends only upon the external forces applied to it. Consequently, this simplification does not permit a study of the internal motion within the mass of fluid nor of the fine structure of the flow pattern.

XIII-1.4 MATHEMATICAL EXPRESSION OF MOMENTUM

Considering the separation of forces into internal forces $\vec{F}_i$ and external forces $\vec{F}_e$, the momentum equation $\vec{F} = m\frac{d\vec{V}}{dt}$ then becomes: $\vec{F} = \Sigma\vec{F}_i + \Sigma\vec{F}_e = m\frac{d\vec{V}}{dt}$. Now since $\Sigma\vec{F}_i = 0$ (by definition), then $\Sigma\vec{F}_e = m\frac{d\vec{V}}{dt}$ or $\Sigma\vec{F}_e = \frac{d(m\vec{V})}{dt}$ which means: The variation of momentum (mV) with respect to time is equal to the sum of external

forces acting on the mass of fluid.

XIII-1.5 AN IMPORTANT REMARK ON FORCE, INERTIA, WORK AND ENERGY

Rather than express the momentum equation $\vec{F} = m \frac{d\vec{V}}{dt}$ for an elementary fluid particle as an equality of forces and inertia, consider an equality of work and kinetic energy as previously proposed in Section X-1.1: $\vec{F}\, d\vec{S} = m \frac{d\vec{V}}{dt}\, d\vec{S} = d\left(\frac{mV^2}{2}\right)$. The separation between internal and external forces is theoretically always possible. Hence: $\Sigma(\vec{F}_e\, d\vec{S}) + \Sigma(\vec{F}_i\, d\vec{S}) = d\left(\frac{mV^2}{2}\right)$. However, in spite of the fact that the total sum of the internal forces is zero by definition ($\Sigma\vec{F}_i = 0$), the work of these internal forces does not equal zero, i.e., $\Sigma(\vec{F}_i\, d\vec{S}) \neq 0$.

To illustrate this point, consider a uniform flow in a pipe (see Figure XIII-2). The external forces acting at the wall-boundary have a total sum different from zero, thus tending to move the pipe in the direction of the flow. But the existing internal forces sum to zero. However, these internal forces do work and this work is the cause of the head loss. The head loss expresses the transformation of energy lost by friction into heat.

Thus, insofar as the energy equality is concerned, internal forces may not be neglected.

XIII-1.6 FIELD OF APPLICATION

From the previous considerations, it can be deduced that, in practice, the difference in application of the momentum equality and the energy equality lies in the emphasis on the importance of internal

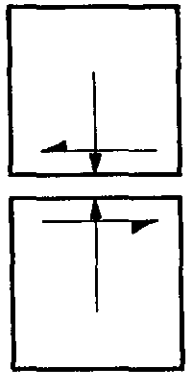

FIGURE XIII-1
EXTERNAL FORCES AT THE BOUNDARIES OF TWO ADJACENT FLUID PARTICLES MAY BE CONSIDERED AS INTERNAL FORCES IN ORDER TO STUDY THEIR OVERALL MOTION

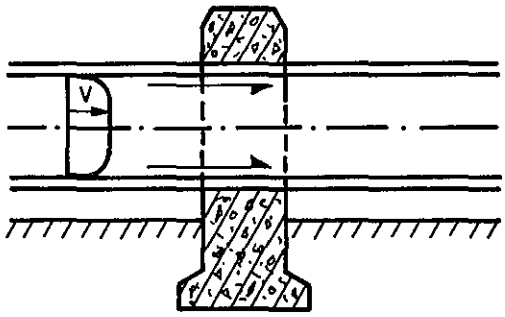

FIGURE XIII-2
EXTERNAL FORCES TEND TO MOVE THE PIPE DOWNSTREAM BUT THEY DO NOT WORK. THE HEAD LOSS IS CAUSED BY THE WORK OF INTERNAL FORCES, WHICH HAVE A TOTAL SUM EQUAL TO ZERO

forces, insofar as the phenomena being studied are concerned. A number of examples in this Chapter will illustrate this fact.

A considerable number of hydraulic problems are simplified by the fact that the sum of the internal forces is zero. It is for this reason that the momentum theorem is a master key for opening a large number of doors which are definitely closed to the other processes based on the conservation of energy equation. The momentum theorem is used to calculate the overall effects of a mass of fluid, however complex the flow, without dealing with the fine structure of the flow pattern. However, to apply the method which consists of considering only the external forces to calculate the change in momentum requires a perfect knowledge of boundary conditions at the extremities of the mass of fluid under study. This point is illustrated in Section XIII-5.

XIII-1.7 MOMENTUM THEOREM AND NAVIER-STOKES EQUATION

The momentum equation, like the Bernoulli equation, can be established by several demonstrations. One demonstration could make use of the basic Navier-Stokes (or Eulerian) equation by integration of all the involved forces causing motion of an elementary particle of fluid mass ρ to the forces involved in the motion of a definite mass of fluid m. This is evident since the Navier-Stokes equation is the momentum equation for a mass of fluid of unit volume.

Instead, a direct vectorial demonstration is given for an arbitrary mass of fluid of finite dimensions. Although the momentum theorem is used mainly to solve problems in steady flow, the more

general case of unsteady flow will be studied here. This method will illustrate the difficulties encountered in the application of the momentum theorem to unsteady motion.

XIII-2 MATHEMATICAL DEMONSTRATION

XIII-2.1 MATHEMATICAL EXPRESSION OF THE TOTAL MOMENTUM IN A FINITE VOLUME

By definition, the product of mass and velocity is momentum: Momentum $= m\vec{V}$. Hence the momentum of an elementary particle fluid of mass ρ is $\rho\vec{V}$. Therefore, the total momentum of a definite mass of volume D, in which the velocity vector varies both with time and direction, is $\iiint_D \rho\,\vec{V}\,dD$, where dD is an element of the volume D.

XIII-2.2 NOTATION

A demonstration similar to that presented in Section XII-1.2 is given. One recalls that a mass of fluid in an elementary stream tube was successively considered at time t and time $t + dt$ (see Figure XII-3). However, for more generality, the mass of fluid under study will not be limited by a stream tube, but may be any mass of fluid in a given flow as shown in Figure XIII-3. This mass may have any size and any shape.

Assuming this mass of fluid to be defined at a given time t by an enclosed area A, the same mass of fluid at time $(t + dt)$ will be defined by an enclosed area A', quite similar to A. These two

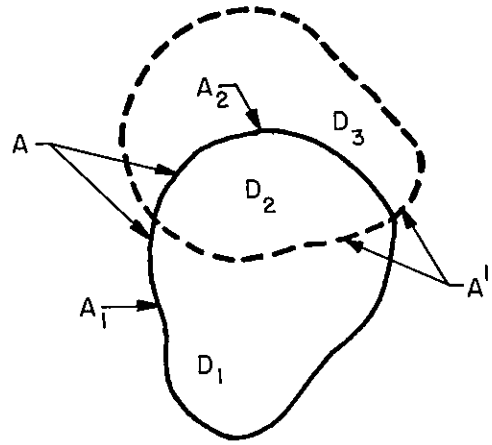

FIGURE XIII-3
MOMENTUM NOTATION

enclosed areas divide the space occupied into three domains: D_1, D_2, and D_3. While D_2 has a finite dimension, D_1 and D_3 are by definition infinitely small since the interval of time dt is infinitely small.

Successive values of the total momentum of the fluid in these three domains will be calculated.

XIII-2.3 CHANGE OF MOMENTUM WITH RESPECT TO TIME

The momentum of fluid enclosed in the common part D_2 at time t is $\iiint_{D_2} \rho \vec{V}\, dD$, and at time $t + dt$ since the velocity becomes $(\vec{V} + \frac{\partial \vec{V}}{\partial t}\, dt)$: $\iiint_{D_2} \rho\, (\vec{V} + \frac{\partial \vec{V}}{\partial t}\, dt)\, dD$.

Hence the difference or variation of momentum during the

interval of time dt is:

$$\iiint_{D_2} \rho\left(\vec{V} + \frac{\partial \vec{V}}{\partial t}\, dt\right) dD - \iiint_{D_2} \rho\, \vec{V}\, dD = \iiint_{D_2} \frac{\partial \rho \vec{V}}{\partial t}\, dt\, dD$$

Note that the integral is the product of a finite number D times an infinitesimal number $\frac{\partial \rho \vec{V}}{\partial t}\, dt$. Dividing by dt, the variation of momentum per unit time is: $\iiint_{D_2} \frac{\partial \rho \vec{V}}{\partial t}\, dD$

Thus it can be seen that this term (which is deduced from the variation of momentum with respect to time) has a zero value in the case of a steady flow since $\frac{\partial \vec{V}}{\partial t} = 0$.

XIII-2.4 CHANGE OF MOMENTUM WITH RESPECT TO SPACE

XIII-2.4.1 The momentum of fluid enclosed in domain D_1 (see Figure XIII-4) at time t is $\iiint_{D_1} \rho \vec{V}\, dD$ which is dimensionally the product

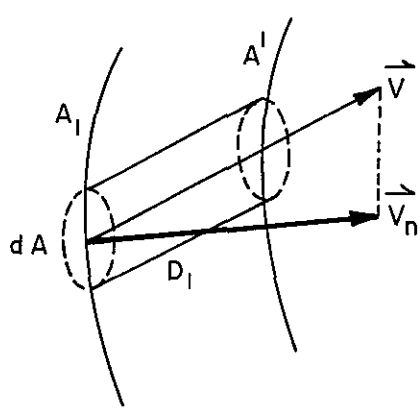

FIGURE XIII-4
MOMENTUM NOTATION

of a finite number $|\vec{V}|$ and an infinitesimal number D_1. Domain D_1 may be considered as containing elementary cylinders of base dA and sides parallel to the velocity vector $\vec{V}$.

The volume of an elementary cylinder is $dD = dAV_n dt$ where V_n is the projected value of $\vec{V}$ on a perpendicular to dA. It is deduced that $\iiint_{D_1} dD = \iint_{A_1} dAV_n dt$ in which A_1 is the part of A which defines the limit of domain D_1.

Hence the momentum of fluid enclosed in D_1 becomes:

$$\iiint_{D_1} \rho \vec{V}\, dD = dt \iint_{A_1} \rho \vec{V}\, V_n\, dA$$

This is given by a surface integral rather than a volume integral throughout the volume D_1.

XIII-2.4.2 The momentum of fluid enclosed in domain D_3 at time $(t + dt)$ is $\iiint_{D_3} \rho (\vec{V} + \frac{\partial \vec{V}}{\partial t} dt)\, dD$

The first integral $\iiint_{D_3} \rho \vec{V}\, dD$ is the product of a finite number $|\vec{V}|$ and an infinitesimal number D_3 while the second integral $\iiint_{D_3} \rho \frac{\partial \vec{V}}{\partial t} dt\, dD$ is a product of two infinitesimal numbers $\left| \frac{\partial \vec{V}}{\partial t} dt \right|$ and D_3. Hence this second integral may be neglected.

A process of calculation similar to that just demonstrated in the above section shows that:

$$\iiint_{D_3} \rho \vec{V}\, dD = - dt \iint_{A_2} \rho \vec{V}\, V_n dA$$

where A_2 is the part of A defining the limit of domain D_3.

XIII-2.4.3 Now the difference of momentum between domains D_1 and D_3, at time $(t + dt)$ and time t respectively, caused by the variation

of velocity with respect to space is:

$$dt \iint_{A_2} \rho \vec{V} V_n dA - dt \iint_{A_1} \rho \vec{V} V_n dA$$

Dividing by the interval of time dt, the difference of momentum per unit time is $\iint_{A_2} \rho \vec{V} V_n dS - \iint_{A_1} \rho \vec{V} V_n dA$

Now since the discharge of momentum entering the domain is affected by a negative sign, while the discharge of momentum leaving the domain is affected by a positive sign, and $A = A_1 + A_2$, then the previous difference becomes $\iint_A \rho \vec{V} V_n dA$. The value $\rho Q V$ encountered in elementary hydraulics may be recognized in this expression.

XIII-2.5 GENERAL FORMULA

Finally the total change of momentum per unit time with respect to both time and space is equal to the sum of the external forces. Therefore:

$$\Sigma \vec{F}_e = \iiint_D \frac{\partial \rho \vec{V}}{\partial t} dD + \iint_A \rho \vec{V} V_n dA$$

XIII-2.6 DIFFICULTIES IN THE CASE OF UNSTEADY FLOW

In the case of steady flow, the integral with respect to volume D, $\iiint_D \frac{\partial \rho \vec{V}}{\partial t} dD = 0$ and the momentum theory becomes simply:

$$\Sigma \vec{F}_e = \iint_A \rho \vec{V} V_n dA$$

As for external forces, only the boundary conditions for A appear in this equation since the momentum is given by a surface integral. Hence its application does not require a knowledge of the fine structure of flow within the domain D but only in the area A.

In the case of unsteady flow, the volume integral $\iiint_D \frac{\partial \rho \vec{V}}{\partial t}\, dD$ is different from zero and requires a knowledge of the flow patterns within D as a function of time and space. Thus the momentum theorem is difficult to apply to unsteady flow and as such, is less frequently used in practice.

XIII-2.7 THE CASE OF TURBULENT FLOW

In the previous formulas, the notation $\vec{V}$ is the exact value of the velocity. The application of the momentum theorem to turbulent flow under this form is theoretically impossible because of the complexity of the flow pattern. However, as stated previously, only the mean motion is studied in turbulent flow and $\vec{V}$ is replaced by its mean value with respect to time, $\overline{\vec{V}}$, and a fluctuating value $\vec{V}'$ of mean value equal to zero. Then, by the same process as the one used in Chapter VII,

$$\frac{1}{T}\int_T \iiint_D \frac{\partial \rho \vec{V}}{\partial t}\, dD\, dt = \rho \frac{\partial}{\partial t} \iiint_D \frac{1}{T}\int (\overline{\vec{V}} + \vec{V}')\, dt\, dD = \iiint_D \frac{\partial \rho \overline{\vec{V}}}{\partial t}\, dD$$

Thus, in the case of steady mean motion, $\overline{\vec{V}}$ = constant; $\frac{\partial \overline{\vec{V}}}{\partial t} = 0$ and $\iiint_D \frac{\partial \rho \overline{\vec{V}}}{\partial t}\, dD = 0$ despite turbulence. In other words, the term expressing the variation of momentum with respect to time does not change for turbulent motion and the real value $\vec{V}$ may be replaced by the mean value with respect to time, $\overline{\vec{V}}$, without any correction factor.

XIII-2.7.1 In the case of unidimensional turbulent flow, it is theoretically possible to introduce the correction factors by two methods.

The first method, as has been done with the Reynolds equation, consists of considering the inertia forces caused by the

turbulent fluctuations (which are equivalent to the discharge of momentum) as external forces. In this process, external forces such as $-\iint_A \rho u'^2 dA$ appear along with pressure forces.

XIII-2.7.2 The second method, which is the most practical, considers the effect of turbulent fluctuations as shown in paragraphs XI-13 and XII-2 in the generalization of the Bernoulli equation for a stream tube. One may recall that the variations with respect to time appear as a function of τ while variations in a cross section appear as a function of χ such that $\vec{V} = \vec{U}(1 + \sigma + \chi)$ where $\vec{U} = \frac{1}{T}\int_0^T \frac{1}{A}\iint_A \vec{V}\, dA\, dT$.

Then, introducing the value U , the surface integral becomes

$$\frac{1}{T}\int_0^T \iint_A \rho\, \vec{V}.V_n dA = \rho \frac{1}{T}\int_0^T \iint_A U\, U_n (1 + \sigma + \chi)^2 dA = \rho\left(1 + \frac{\alpha}{3}\right) Q\, \vec{U}$$

where $\alpha = 3\,\overline{\sigma^2} + 3\,\overline{\chi^2}$

It may be noted that it is the same correction factor as that obtained for the local inertia term and one-third of that obtained for the convective inertia term. This result is consistent since both discharges of momentum and the local inertia term appear as functions of the square of the velocity.

XIII-3 PRACTICAL APPLICATION OF THE MOMENTUM THEOREM - CASE OF A STREAM TUBE

XIII-3.1 LIMITS

The first step in the application of the momentum theorem consists of choosing the limits of the mass of fluid to which the momentum theorem

can be applied. These limits are chosen in a section where the boundary conditions are well known, i.e., fixed boundaries or cross sections where the motion may be considered as unidimensional.

Since the momentum theorem is a vectorial equality, it is convenient to choose one or two axes of reference. Generally the main flow direction indicates one of the axes to be considered.

Finally the momentum equality is written by projecting all the forces involved on these two axes of reference.

In many cases of unidimensional flow, only the equalities of force in the direction of flow are of interest.

XIII-3.2 PRACTICAL EXPRESSION OF THE MOMENTUM FOR UNIDIMENSIONAL FLOW

For a streamtube flow, as shown in Figure XIII-5, the terms of the momentum equation

$$\iint_A \vec{V}\, V_n dA + \iiint_D \frac{\partial \rho \vec{V}}{\partial t}\, dD = \Sigma \vec{F}_e$$

applied to a fluid mass within cross sections A_1 and A_2 take the following forms:

$$\iint_A \vec{V}\, V_n dA = (1 + \frac{\alpha}{3})\ \rho Q (\vec{V}_2 - \vec{V}_1)$$

This is the variation of momentum with respect to space. Now if cross section A is constant, the flow is uniform and $\iint \rho \vec{V}\, V_n dA = 0$.

The variation of momentum with respect to time is

$$\iiint_D \frac{\partial \rho \vec{V}}{\partial t}\, dD = \rho \iiint_D \frac{\partial \vec{V}}{\partial t}\, dA\, dL$$

If the cross section is constant and V the mean velocity in the cross section, $\iiint_D \rho \frac{\partial \vec{V}}{\partial t}\, dD = \rho \frac{\partial \vec{V}}{\partial t} AL$. It is recalled that since this expression is a linear function of V, there is no correction factor because of turbulence.

XIII-3.3 EXTERNAL FORCES

XIII-3.3.1 Pressure Forces

Pressure forces may be considered as consisting of two components:

a. The sum of the forces caused by constant pressures p_2 and p_1, i.e., $p_2A_2 - p_1A_1$. In this expression, atmospheric pressure may be included or omitted.

b. Hydrostatic forces applied to the center of gravity of the cross sections. This is illustrated in Figure XIII-6. In the case of a free surface two-dimensional flow on a horizontal bottom:

$$\Sigma F_e = \rho g \left[\frac{h_2^{\,2}}{2} - \frac{h_1^{\,2}}{2} \right]$$

This hydrostatic term is zero in the case of uniform flow and is often neglected in flow under pressure.

At the limits of a streamtube where V_n is zero, the pressure force is given by $\iint_{A_W} p\vec{n}\, dP\, dL$ where P is the wetted perimeter and $\vec{n}$ is a unit normal to the surface. If P is expressed as a function of L, this pressure force is $\int p\vec{n}\, P(L)\, dL$. This force is usually expressed along the axis in the mean direction of flow only, becoming: $\int p \sin\alpha\, P(L)\, dL$ where α is the angle of the boundary with the axis. See Figure XIII-7.

In this case p could be given at any point by the Bernoulli

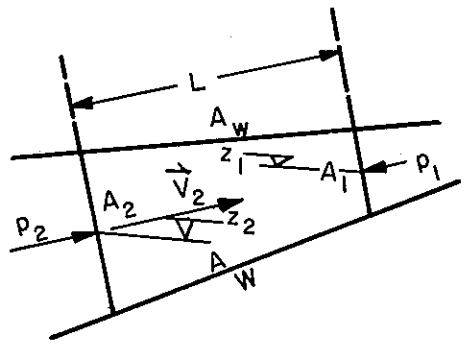

FIGURE XIII-5
MOMENTUM THEOREM APPLIED
TO A STREAMTUBE - NOTATION

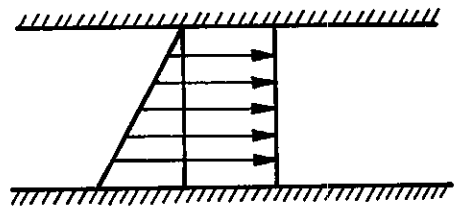

FIGURE XIII-6
PRESSURE FORCES
ON A CROSS SECTION

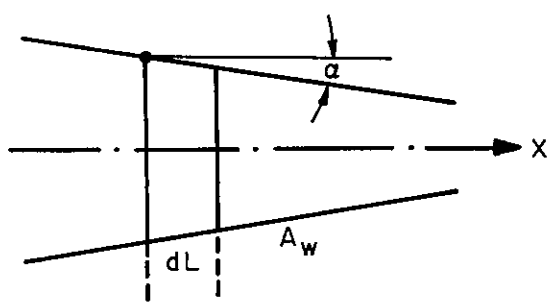

FIGURE XIII-7
PRESSURE FORCES ON THE
LIMIT OF A STREAMTUBE

equation or by assumptions based on physical observations. If all the other terms are known, this becomes the only unknown in the equation and the momentum theorem provides a way of finding the value of this integral.

XIII-3.3.2 Gravity Force

The gravity force is given by $\rho g \int A \, dL$ which has a component $\rho g \int A \, dz$ in the direction of the mean flow. For a uniform flow this becomes $\mp \rho g A (z_2 - z_1)$. This term is equal to zero for a horizontal flow.

XIII-3.3.3 Friction Force

The friction force is $\iint \tau \, dP \, dL$ where P again is the wetted perimeter. For a uniform flow this expression reduces to $\tau P L$. Frequently in the case of a short structure or short flow (e.g. hydraulic jump or sudden enlargement), this force is neglected.

XIII-3.3.4 Specific Force

Finally, dividing through all these terms by ρg and equating forces yields:

$$\left(1 + \frac{\alpha_2}{3}\right) \frac{V_2^2}{g} A_2 - \left(1 + \frac{\alpha_1}{3}\right) \frac{V_1^2}{g} A_1 - \frac{1}{g} \iiint \frac{\partial V}{\partial t} \, dA \, dL =$$

$$- \frac{p_2}{\rho g} A_2 + \frac{p_1}{\rho g} A_1 \mp \iint_L \frac{p}{\rho g} \sin\alpha \, P \, dL \mp \int_{z_1}^{z_2} A \, dz + \iint_L \tau \, dP \, dL$$

It is often convenient to group these terms as follows:

$$\left[\frac{V_2^2}{g} + \frac{p_2}{\rho g}\right] A_2 - \left[\frac{V_1^2}{g} + \frac{p_1}{\rho g}\right] A_1 =$$

where α is neglected.

$$\frac{1}{g}\int_L \frac{\partial V}{\partial t} A(L)\,dL \mp \int_L \frac{p(L)}{\rho g} \sin\alpha\, P(L)\,dL \mp \int_{z_1}^{z_2} A\,dz + \int_L \tau\, P(L)\,dL$$

The specific force in a cross section A is $\left[\frac{V^2}{g} + \frac{p}{\rho g}\right] A$.

Thus for a uniform flow, the above expression becomes:

$$\left[\frac{p_2}{\rho g} + z_2\right] - \left[\frac{p_1}{\rho g} + z_1\right] = \frac{L}{g}\frac{\partial V}{\partial t} + \frac{\tau P L}{A}$$

since $A_1 = A_2 = A$ and $V_1 = V_2$. Note that the term $\frac{\tau PL}{A}$ can be written $\frac{\tau L}{R_h}$ where R_h is the hydraulic radius. One can recognize that the above expression may also be obtained from the Bernoulli equation where $V \cong U$ (average velocity) and the friction force $F = \frac{\tau p}{A} = \frac{\tau}{R_h}$ (see Section XII-2.6).

XIII-4 EXAMPLES

In order to illustrate previous considerations and to provide a guide for further applications, some examples are given with an emphasis on all the necessary assumptions not usually given in elementary textbooks on hydraulics.

XIII-4.1 HYDRAULIC JUMP ON A HORIZONTAL BOTTOM

From observation it is common knowledge that the flow pattern in a hydraulic jump is extremely complicated. However, by considering the external forces only and change of momentum at the boundaries, one can study this complex phenomenon without dealing with the complicated fine structure of the flow.

Firstly, the flow limits are chosen in a plane where the flow pattern is well known; i.e., far enough from the front of the hydraulic

jump for the mean flow to be parallel to the bottom (Figure XIII-8).

Secondly, two reference axes are chosen. One axis will obviously be chosen in the direction of flow OX .

The external forces to be considered in the OX direction are:

a. The pressure forces at the boundaries; i.e., on the vertical planes AB and CD , having a total sum in the OX direction different from zero. The pressure distribution is hydrostatic.

b. The shearing stresses caused by friction on the boundaries, including the free surface, and on the planes BC and AD in a direction opposite to OX . In such a short structure, though, these shearing stresses are negligible. Hence, the external forces acting in the OX

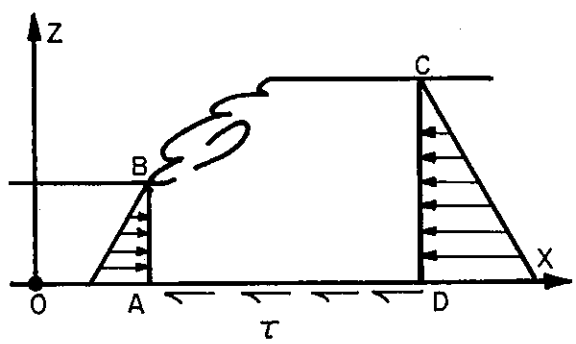

FIGURE XIII-8
HYDRAULIC JUMP - NOTATION

direction are:

$$\Sigma F_e = \rho g \left[\frac{h_1^2}{2} - \frac{h_2^2}{2} \right]$$

An additional term $\int \rho u'^2 dz$, caused by turbulent fluctuations and which increases the value of the pressure acting on AB and CD , should be considered; however, in this case it is neglected.

Now the difference of momentum with respect to time is

$$\frac{dmV}{dt} = \rho Q \Delta V = \rho Q (V_2 - V_1)$$

Equating this change of momentum with the external forces leads to:

$$\rho Q (V_2 - V_1) = \rho g \left[\frac{h_1^2}{2} - \frac{h_2^2}{2} \right]$$

which finally becomes, after some elementary transformations:

$$\frac{Q^2}{g h_1 h_2} = \frac{h_1 + h_2}{2}$$

Choosing a second axis in the vertical direction will give an equality between the atmospheric pressure force acting on the free surface, the gravity force which is equal to the total weight of water in volume ABCD , and the external force acting vertically upwards on the bottom of the hydraulic jump. There is no change of momentum in this direction.

XIII-4.2 HYDRAULIC JUMP IN A TUNNEL

Consider the case of a partially open gate in a tunnel submitted to a high upstream pressure as shown in Figure XIII-9. An air vent is often necessary to avoid cavitation effects. When conditions for

a hydraulic jump are satisfied, the water flow acts as an ejector and a quantity of air is sucked into the tunnel. Because of the head loss in the air vent, the pressure at the free surface is smaller than atmospheric pressure. Hence the external forces must take into account this difference in pressure. The simplest solution is obtained using the absolute value $P = p + p_a$ of the pressure which gives:

$$\Sigma F_e = \left(P_1 A_1 + \rho g \frac{A_1 h_1}{2}\right) - \left(P_2 A_2 + \rho g \frac{A_2 h_2}{2}\right)$$

P_2 is greater than the atmospheric pressure because of the head loss in the downstream part of the tunnel. The above equation is based on similar assumptions as XIII-4.1. Because of air-entrainment, momentum in cross section (1) is $\frac{\rho Q^2}{A_1}$ and in cross section (2) $\rho Q \frac{Q + Q_a}{A_2}$ where Q_a is the discharge of air at pressure P_2; ρQ is the mass per unit time; and $\frac{Q + Q_a}{A}$ is the velocity.

The mass of air is neglected, but the air discharge has an influence only on the velocity of the water.

XIII-4.3 PARADOX OF BERGERON

Consider a tank on wheels as in Figure XIII-10. On one side the pressure distribution is hydrostatic, while on the other side the pressure head is transformed into velocity head. The difference could be obtained by calculating, successively, a flow net, the pressure distribution on the two sides, and the forces. However, the momentum theorem gives the total value of the force directly as: (C_c is a coefficient of contraction)

$$F = \rho Q V = \rho C_c A \sqrt{2gh}$$

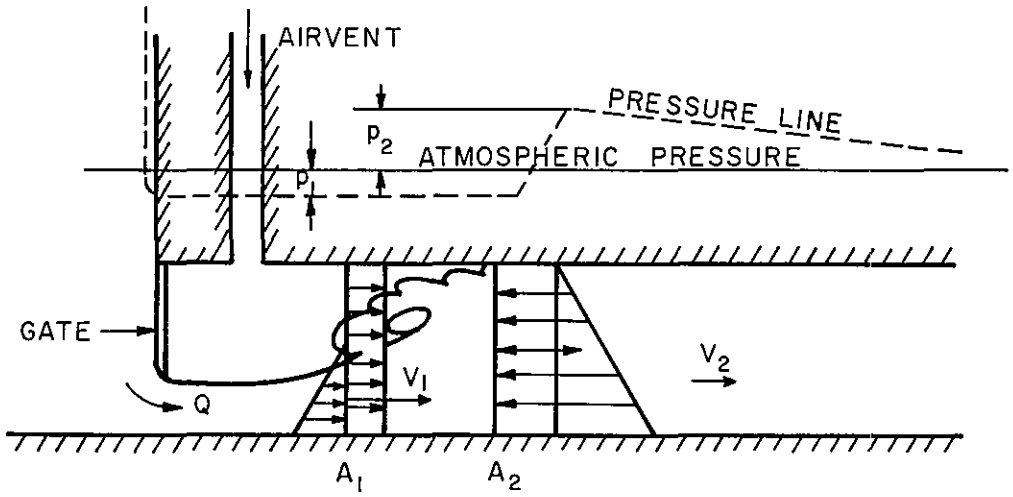

FIGURE XIII-9
HYDRAULIC JUMP IN A TUNNEL

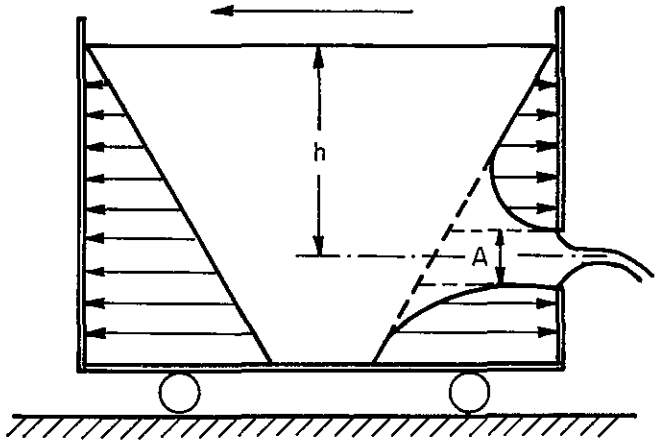

FIGURE XIII-10
JET REACTION PRINCIPLE

Because of this force and since other forces (such as gravity and atmospheric pressure) have a horizontal component equal to zero, the tank has a tendency to move in the opposite direction of the jet. This is the principle of jet propulsion.

Now suppose water is present outside the tank and also assume the tank is heavier than the buoyant force (Figure XIII-11). In this case the tank does not move. The force caused by the jet is equal to the force caused by the very complicated motion inside the tank. This may be considered as another application of Newton's Third Law -- action is equal and opposite to reaction -- and the momentum theorem must be applied to the total mass of water. This is what is known as the Paradox of Bergeron.

The same result is obtained in the case shown by Figure XIII-12. The jet acts on the wall of the downstream tank. The tank does not move.

It is well known that a sprinkler rotates or a rubber pipe moves due to a jet action. However, if a sprinkler or a rubber pipe is used in pumping water from a full tank, it does not move. This fact may be easily demonstrated by considering the head loss at the entrance. Finally, consider the two tanks as shown in Figure XIII-13 in which it is assumed that the holes have the same cross section. One of the holes is closed by means of a plane held in place by the jet from the left tank. The area of pressure ABCD equals the area A'B'C'B' or ABE + FDC = E'B'C'F'. Considering the forces on the plate we obtain:

$$F_L = F_R$$

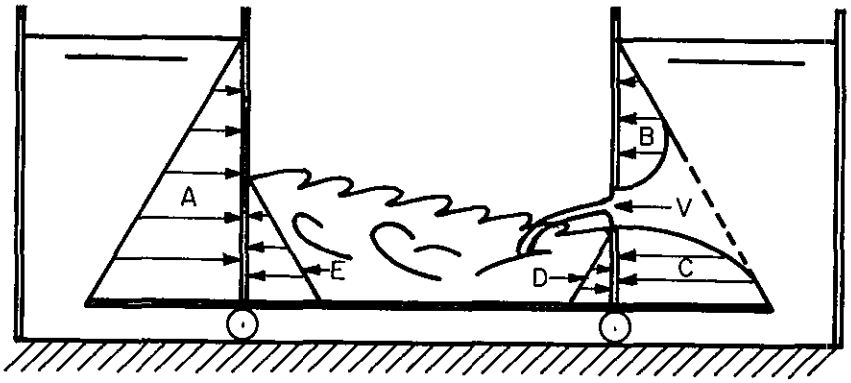

FIGURE XIII-11
PARADOX OF BERGERON
A - (B + C) = E - D

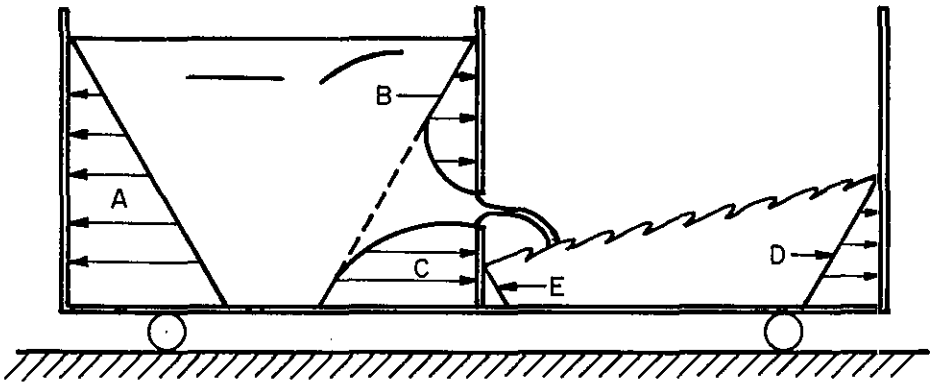

FIGURE XIII-12
PARADOX OF BERGERON
A - (B + C) = B - E

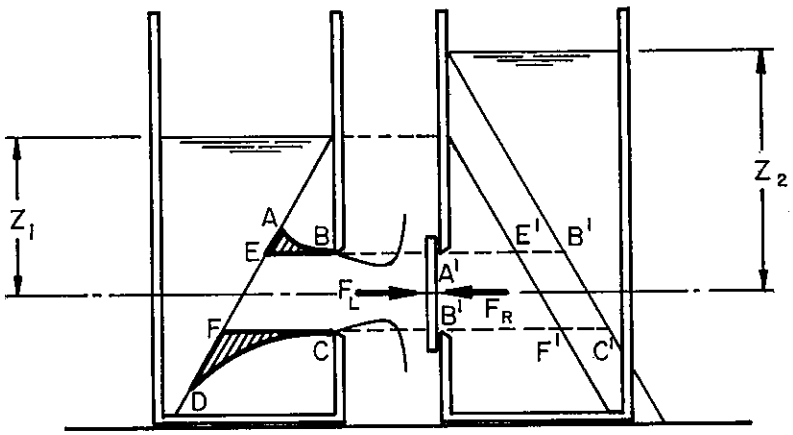

FIGURE XIII-13

ANOTHER PARADOX

AEB + FCD = E' B' C' F'

when

$$\rho A C_d (2gz_1) = \rho g A z_2$$

i.e.,

$$2 C_d z_1 = z_2$$

with $C_d = 0.60$ for an orifice, it is possible for z_2 to be $1.2 z_1$ by the simple insertion of a plate. Shaping the hole in the left tank so that $C_d \rightarrow 1.0$, z_2 can be made almost equal to $2 z_1$. If the jet returns through 180°, z_2 could be equal to $4 z_1$.

All this may be physically explained by the consideration of external forces (AEB and DCF) transformed into momentum.

XIII-5 DIFFICULTIES IN THE APPLICATION OF THE MOMENTUM THEOREM

In spite of its simple appearance, the momentum theorem permits the analysis of complex motions. This leads one to think about the precautions that have to be taken in the application of this theorem.

One difficulty in the application of the momentum theorem is in the choice of the boundary and the boundary conditions. It is impossible to calculate the external forces without having a rough idea of the flow pattern. This often requires experimentation or knowledge of similar previous experiments. Some examples to illustrate these considerations are given below.

XIII-5.1 SUDDEN ENLARGEMENT

The external forces involved are the pressure forces on sections (1) and (2) in Figure XIII-14. It is generally assumed that the pressure p^* exerted by wall S in the flow is the same as the pressure

p_1^* at the end of the smaller pipe. First of all, if the flow is laminar, the streamlines have such a curvature that this assumption is wrong. (See Figure XIII-15.) But it is known by experiment that when the Reynolds number is greater than a critical value, the flow enters the wider pipe in the form of a jet. This jet, often unstable, generates by friction some secondary currents in the corners.

If the velocity is small enough for the convective inertia to be negligible, it is true that the pressure distribution at the cross section (1) is hydrostatic and this usual assumption is valid. In fact, the eddies caused by friction induce a centrifugal force which causes the pressure force to be slightly greater than the force calculated with the previous assumption. However, the assumption is quite valid for practical purposes.

XIII-5.2 HYDRAULIC JUMP CAUSED BY A SUDDEN DEEPENING

This example illustrates a case where it is impossible to calculate external force without experiments.

Suppose that a channel has a sudden deepening in order to fix the position of a hydraulic jump (Figure XIII-16). At the exact plane where the front of the jump occurs, the external force exerted by the vertical wall changes as shown in the diagram. Only systematic experimentation will give the factors which influence this phenomenon, and only this experimentation will establish the corresponding theory.

XIII-5.3 HYDRAULIC JUMP ON A SLOPE

The study of a hydraulic jump on a slope involves a body

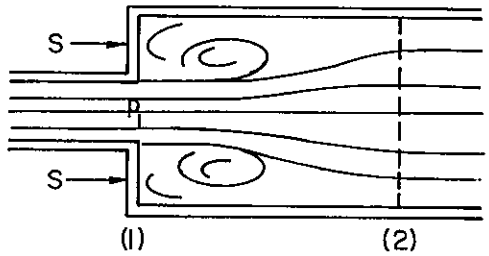

FIGURE XIII-14
SUDDEN ENLARGEMENT

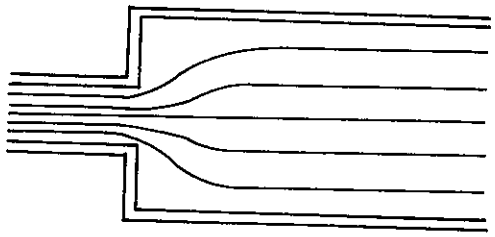

FIGURE XIII-15
SUDDEN ENLARGEMENT
LAMINAR FLOW

force -- the force of gravity -- which definitely influences the flow conditions (Figure XIII-17). The gravity force to be considered is the component of the total gravity force in the direction of the main flow due to the weight of water included between the two usual limits where the flow is parallel to the bottom. Hence this force $\rho g A \ell \sin \alpha$ is a function of the length of the hydraulic jump ℓ. This length could be roughly estimated by experimentation, but it is evident that it cannot be determined with great accuracy. However, the length of the hydraulic jump must satisfy the equation

$$\rho Q (V_2 - V_1) = \rho g \left[\frac{h_1^2}{2} - \frac{h_2^2}{2} \right] + \rho g A \ell \sin \alpha$$

XIII-5.4 INTAKE

Consider a free surface flow as shown in Figure XIII-18. The rise of the water level in part ABCD may theoretically be calculated by applying the momentum equation in the OX direction to the mass of water enclosed in EFBC. Thus:

$$\rho Q V = \rho g \left[\frac{(d + \Delta d)^2}{2} - \frac{d^2}{2} \right]$$

which gives $\Delta d = \frac{V^2}{g}$ and not $\frac{V^2}{2g}$ as it may be expected after a superficial analysis.

However, the practical result is often closer to $\frac{V^2}{2g}$ than $\frac{V^2}{g}$. This is not because the momentum theory is wrong, but because the boundary conditions are wrong. The velocity at section GD is not perpendicular to the cross section and the momentum theorem should be applied to the mass BCDJHGEF in order to include the difference

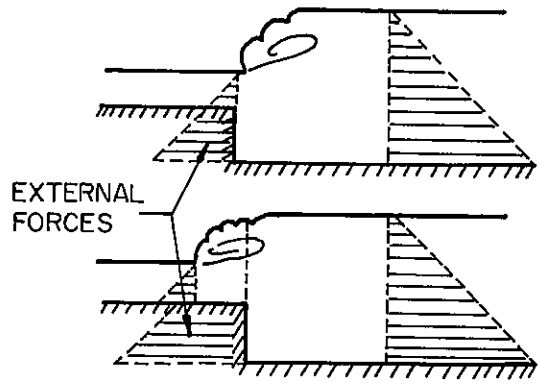

FIGURE XIII-16
HYDRAULIC JUMP ON A SUDDEN DEEPENING

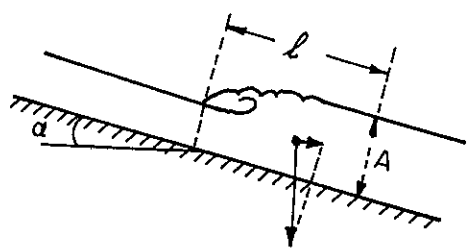

FIGURE XIII - 17
HYDRAULIC JUMP ON A SLOPE
(ℓ : length of jump)

in external forces applied at DH , where the level is higher, and FG , where the level is lower. Unfortunately, these external forces cannot be estimated by theory.

XIII-5.5 UNSTEADY FLOW - TRANSLATORY WAVE

As an example of unsteady flow where the momentum theorem may be used, the case of a translatory wave will be analyzed (Figure XIII-19). It is assumed that the wave is traveling in still water and that the velocity V caused by the translatory wave is constant along a vertical plane. Letting the wave celerity be W, the mass of water changing its velocity from 0 to V in time dt is $\rho(h + \Delta h) W dt$. Hence the change of momentum per unit time is:

$$\iiint_{vol.} \frac{\partial \rho \vec{V}}{\partial t} \, d\,vol = \rho V W (h + \Delta h)$$

The external forces are:

$$\rho g \frac{(h + \Delta h)^2}{2} - \rho g \frac{h^2}{2} \cong \rho g h \Delta h$$

Equating these two expressions, one obtains $\rho V W (h + \Delta h) = \rho g h \Delta h$. On the other hand, because of the continuity, one may write $V (h + \Delta h) = W \Delta h$. Eliminating V gives $W = \sqrt{gh}$. A more exact theory in which the curvature of the paths is taken into account gives: (see Section XVII-6.2)

$$W = \left[g h \left(1 + \frac{3}{2} \frac{\Delta h}{h} + \frac{h^2}{3 \Delta h} \frac{\partial^2 h}{\partial x^2} \right) \right]^{1/2}$$

XIII-6 MOMENTUM VERSUS ENERGY

In this section, the field of application of the momentum theorem is analyzed and compared with the field of application of the

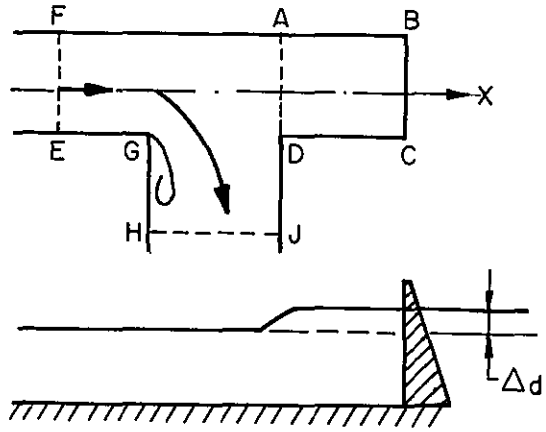

FIGURE XIII-18
EXTERNAL FORCES DUE TO THE INTAKE
CANNOT BE DETERMINED

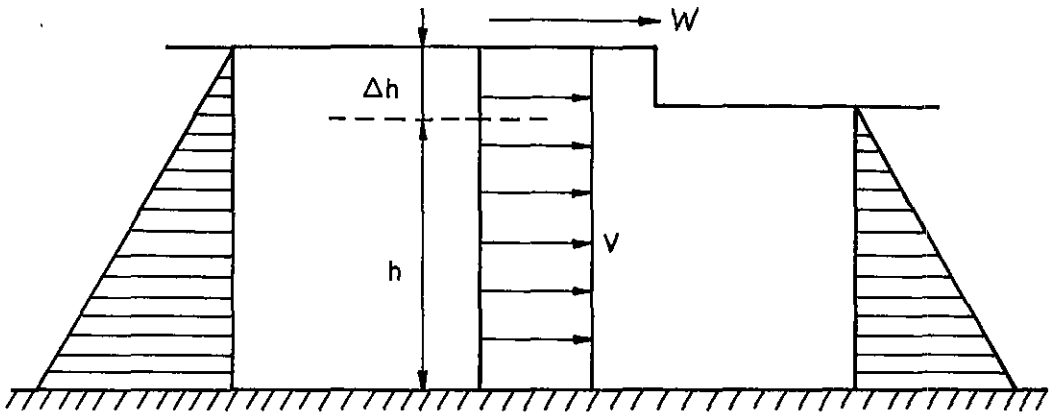

FIGURE XIII-19
TRANSLATORY WAVE

principle of conservation of energy.

As has been seen in paragraph XII-1.1, the main difference in application of these two methods lies in knowing the connection of the internal forces with the phenomena to be studied.

The momentum theorem is used to study an overall effect, whatever the complexity of the flow. The principle of conservation of energy is used to study phenomena linked to the internal motion and to the very fine structure of the flow pattern.

It is easy to conceive that the second method will be more quickly limited in its scope when analyzing hydraulic problems. It has been seen that a number of assumptions, such as irrotationality, are necessary before this second method can be used. These limitations are linked with the difficulties of integration of the basic Navier-Stokes equations.

A number of examples will now be used to illustrate the above points.

XIII-6.1 IRROTATIONAL FLOW WITHOUT FRICTION

The total thrust of a jet on a fixed or a movable plane, the force on the bucket of a spillway, or the total horizontal force exerted on a partially open gate in a tunnel, etc., may be calculated by the momentum theorem (Figure XIII-20). On the other hand, the exact pressure distribution caused by the above conditions of flow may be calculated by the following method.

The flow is assumed to be irrotational and flow net may be

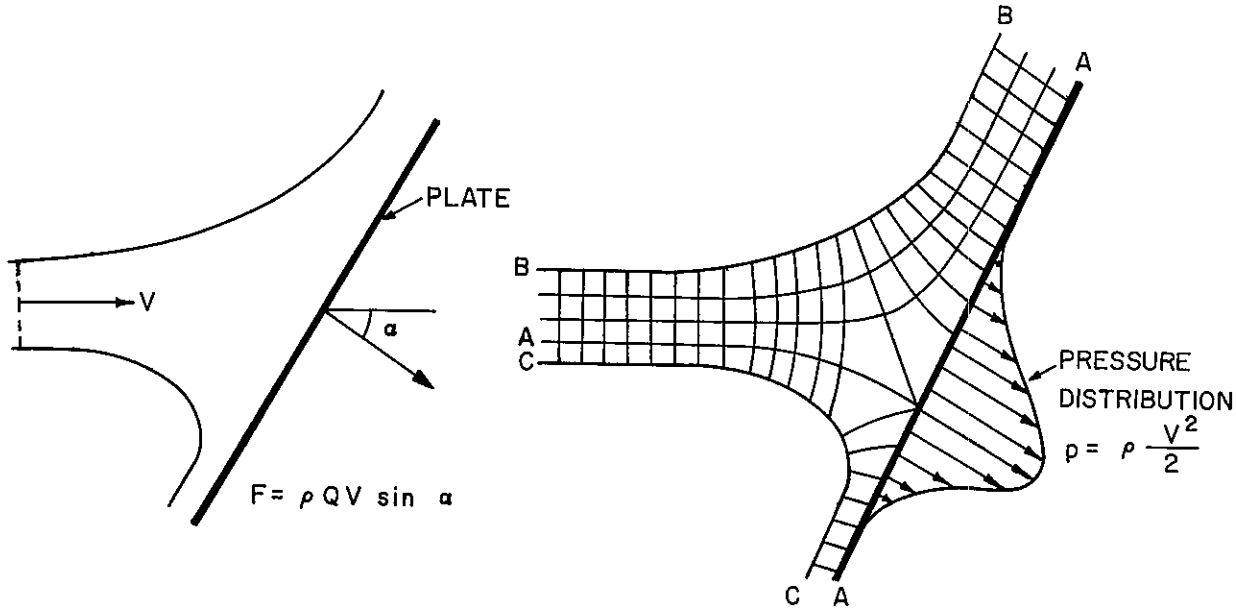

FIGURE XIII-20
TOTAL THRUST IS GIVEN BY THE MOMENTUM THEOREM. THE PRESSURE DISTRIBUTION BY THE BERNOULLI EQUATION AND A FLOW NET

drawn which gives the velocity distribution. The pressure distribution is given by the application of the Bernoulli equation expressing the conservation of energy. It is evident that the total thrust may also be deduced by this process of calculation, using an integration of pressure forces $\int p \, dA = T$, and this could be compared to the result given by the momentum theorem.

However, the result given by the momentum theorem, which is obtained without any assumptions, is more exact provided that the boundary conditions are well known.

XIII-6.2 UNIDIMENSIONAL ROTATIONAL FLOW

The momentum theorem may be used to analyze a number of phenomena, such as a sudden head loss at a sudden enlargement or a hydraulic jump, for example, whatever the complexity of the flow.

Combining the force-momentum equation with the energy-work equation given the value of the head loss by calculating the difference in total heads: $\frac{V^2}{2g} + \frac{P}{\varpi} + z$. Both the force-momentum equation and the energy-work equation are valid to study a diverging flow where the head loss may be neglected, but application of the energy-work equation to a sudden enlargement is wrong without the introduction of another term expressing the head loss, in spite of the identity of equations in their differential form.

XIII-6.3 VARIOUS APPLICATIONS

To show the variety of possible applications of the momentum theorem, some examples are given below which may be analyzed by this

method:

Total thrust exerted by a jet, by a propeller, by an ejector, with two identical fluids or two different fluids such as air-water.

Total force on an ice cover of a river, provided one is able to estimate from the velocity distribution curves, the force exerted by the bottom in a direction opposite to the flow.

Total force exerted on a wing, or on a blade where the flow is separated from the boundary. The classical Joukovski wing theory gives the value of this force assuming the flow to be irrotational with circulation. There is no separation.

XIII-6.4 MECHANICS OF MANIFOLD FLOW

Mechanics of manifold flow is of particular interest as an illustration of the previous considerations on the fields of application of the Bernoulli and momentum equations. Consider a flow as shown by Figure XIII-21. If the motion is two-dimensional, a first method of analysis assumes the motion to be irrotational. In this manner it is possible to calculate the flow pattern by conformal mapping. But this method is far from strictly valid because of the friction forces.

It is also possible to apply the energy equation to both the main conduit flow and to the flow in the lateral, if a term is included to express energy losses. But, it is impossible by theory to establish the

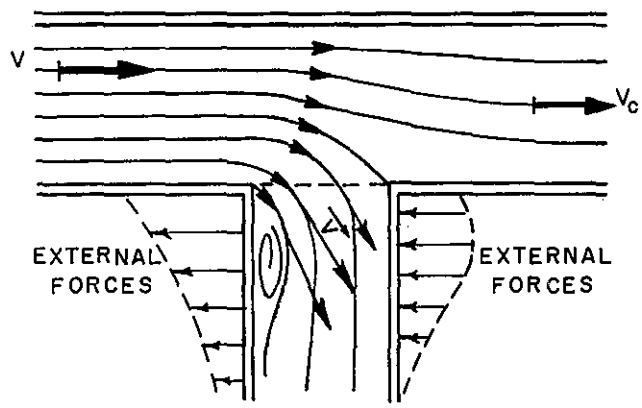

FIGURE XIII-21
MANIFOLD FLOW

value of this term. One can assume that head loss for the lateral pipe is that of a bend, while for the main flow it is that of a sudden enlargement $\frac{(V - Vc)^2}{2g}$. But systematic experimental results do not verify this assumption.

A similar simplified approach consists of writing the momentum equation for the flow at the junction, provided that a term is included for the intermediate momentum of the flow in the lateral at the junction, or the corresponding unbalanced external force component acting on the wall of the lateral.

Both of these methods, due to lack of knowledge of one significant unknown, make direct application of the results impossible without recourse to experiment.

XIII-6.5 CONCLUSION

For any problem where only the overall effect is of interest, the momentum theorem can best be applied because of its great simplicity due to the fact that the sum of the internal forces is considered to be zero. However, when using the momentum theorem, one must be very careful in the estimation of the external forces and boundary conditions. Often an experiment may be necessary to establish these unknowns.

When more details about the flow characteristics are required, the system of differential equations giving the fine structure of the flow directly must be solved completely. But the validity of this solution is quickly limited because of the number of assumptions which must be introduced in order to simplify the system of equations to be solved.

XIII-1 Derive the momentum equation by integrating the Eulerian equation to a finite volume. Determine the correcting terms due to turbulence by integrating the Reynolds equation to a finite volume.

XIII-2 Consider the flow through a pipe of radius R_o ended by two circular disks of radius R and separated by a small distance h as shown by the following figure. Calculate the total force exerted by the flow on the lower disk by assuming that the flow between the two disks is radial and that the total discharge is Q.

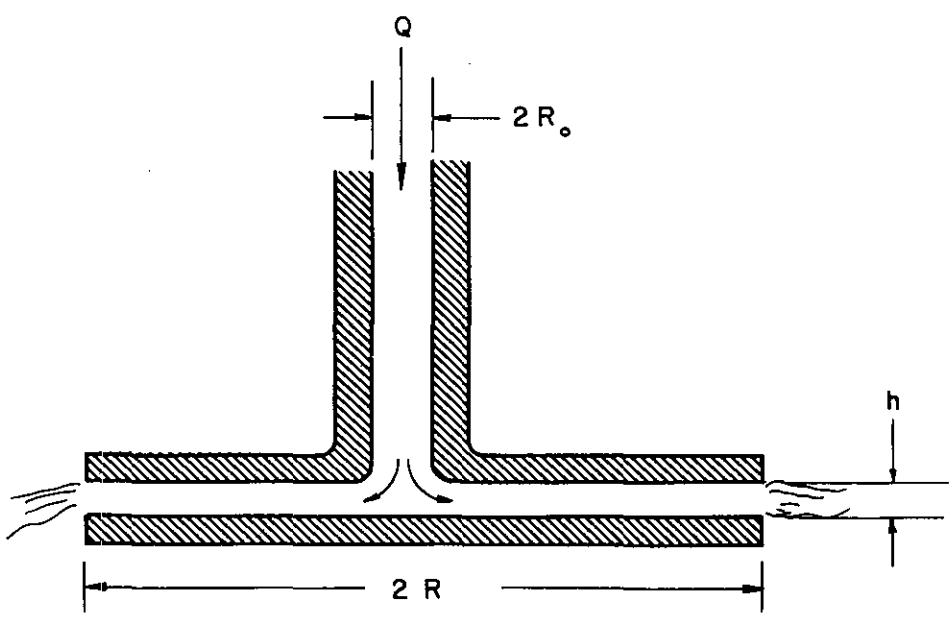

Answer:

$$F \cong \frac{\rho Q^2}{\pi} \left[\frac{1}{R_o^2} - \frac{1}{4h^2} \operatorname{Log} \frac{R}{R_o} \right]$$

XIII-3 Consider a two-dimensional flow such as shown on the following figure. Draw the corresponding flow net and determine the pressure distribution from A to B (assuming no separation at C and D), and calculate the total force on AB by integrating the pressure distribution as a function of the fluid discharge Q. Calculate the same force by application of the momentum theorem. Explain the discrepancy between these two results.

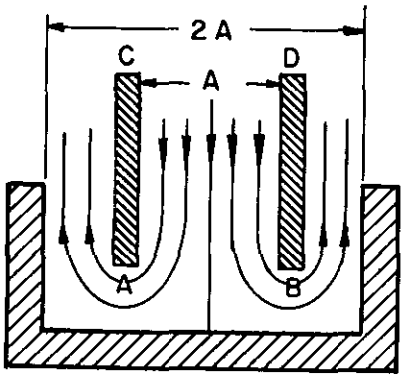

Answer:

The total force by momentum is $2\rho Q V$ and it is only $\rho Q V$ by integration of pressure. The difference is due to the force acting at A and B.

XIII-4 Demonstrate the following relationship for a hydraulic jump in a rectangular horizontal channel:

$$\frac{y_2}{y_1} = \frac{1}{2}\left[\sqrt{1 + 8\,F_1^2} - 1\right]$$

where y_1 and y_2 are the upstream and downstream water depths respectively, $F_1 = \frac{V_1}{\sqrt{g\,y_1}}$ is the Froude number of the upstream flow where V_1 is the average flow velocity.

XIII-5 Consider the flow as shown on the following figure.

1) Draw two flow nets at two different scales to analyze the pressure distribution at the entrance of the gallery and against the gate.
2) Calculate the integral of the horizontal and vertical components of the pressure forces acting against the gate. Compare the result of this total horizontal sum with the result obtained by applying the momentum theorem.
3) Is there any risk of cavitation?
4) Give the values of u and v and $\frac{\partial u}{\partial x}$, $\frac{\partial u}{\partial y}$, $\frac{\partial v}{\partial x}$, $\frac{\partial v}{\partial y}$ along OY for $x = 0$ at the entrance of the gallery from A to B.

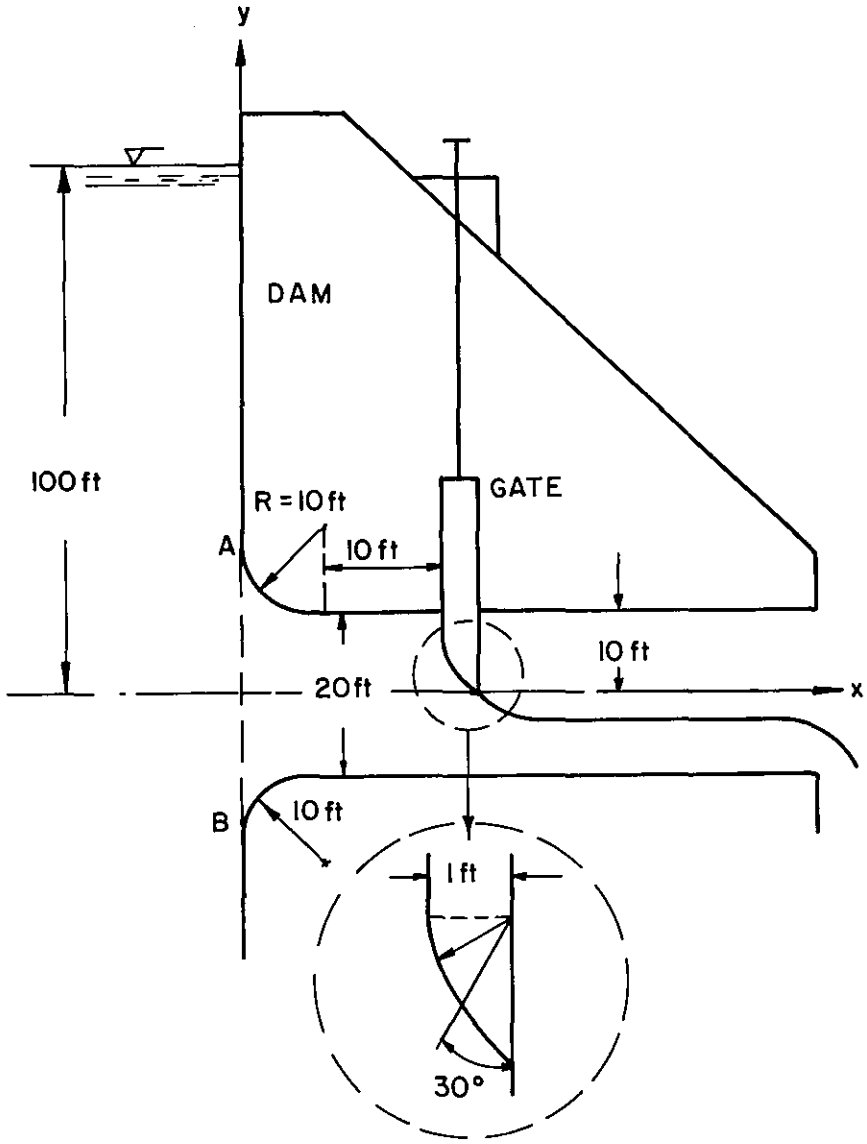

XIII-6 Consider the three following two-dimensional flows as illustrated by the following figures. The first flow (a) is a sudden enlargement; the second flow (b) is a gently diverging flow; and the third one (c) is a hydraulic jump. In these three cases it is assumed that the two end

water depths h_1 and h_2 are identical and that the fluid discharge per unit of width q is the same.

By application of the momentum theorem and the Bernoulli equation to these three cases, determine the value of the external forces and the head losses (the shearing stress at the wall will be neglected).

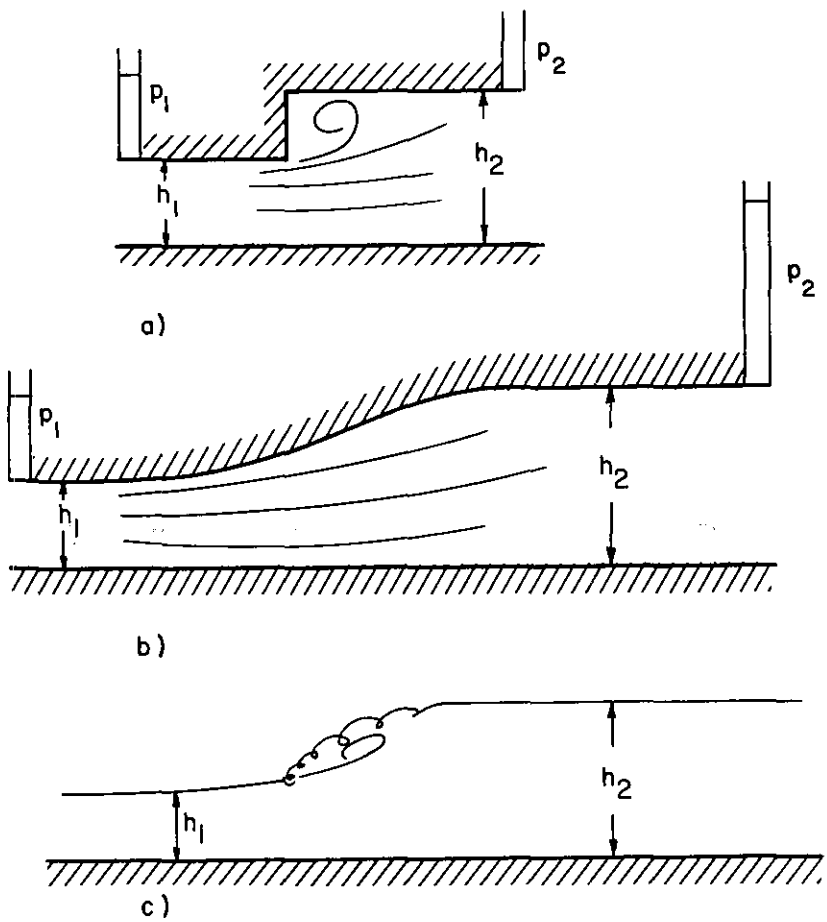

Answer:

Starting equations:

$$\text{Energy:} \quad \frac{V_1^2}{2g} + \frac{p_1}{\rho g} + h_1 = \frac{V_2^2}{2g} + \frac{p_2}{\rho g} + h^2 + \Delta H$$

Continuity: $V_1 h_1 = V_2 h_2$

Momentum: $\left[\frac{V_1^2}{g} + \frac{p_1}{\rho g} + \frac{h_1}{2}\right] h_1 - \left[\frac{V_2^2}{g} + \frac{p_2}{\rho g} + \frac{h_2}{2}\right] h_2 = F$

First case:

$$F = \frac{p_1}{\rho g}[h_2 - h_1]$$

(h can sometimes be neglected by comparison with $\frac{p}{\rho g}$)

Second case:

$$F = \int_1^2 \frac{p(x)}{\rho g} \sin \alpha \, dx$$

ΔH (head loss) is negligible so the value of the integral F is obtained (h can sometimes be neglected by comparison with $\frac{p}{\rho g}$)

Third case:

$$\frac{p}{\rho g} = \frac{p_a}{\rho g}$$

The sum of external forces due to atmospheric pressure equals zero, so all the terms $\frac{p}{\rho g}$ disappear.

XIII-7 Find the value of the contraction coefficient in the case of the circular orifice (called the Borda mouthpiece) as shown on the following

figure. The contraction coefficient is defined by the ratio of the smallest cross section of the jet to the cross section of the orifice.

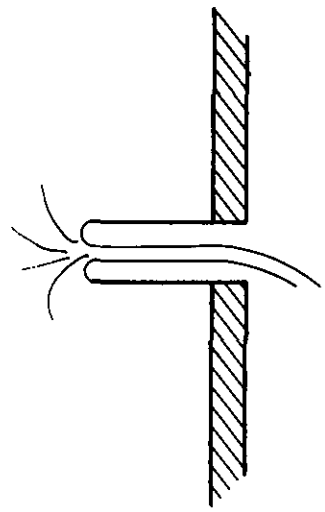

Answer:

$$\rho Q V = \rho g z A \quad \text{(external force)}$$

and since

$$\rho Q V = p\,[2\,g z]\,A C, \quad C = \frac{1}{2}$$

XIII-8 Consider a weir such as shown on the following figure. Determine the expression for z as a function of the head above the weir edge H. It will be assumed that the weir is aerated, i.e., the atmospheric pressure is applied on the free surface. The discharge per unit length is $q = 0.5\,H\sqrt{2\,g H}$ and V will be taken equal to $0.1\sqrt{2\,g h}$. What is the error which is made in neglecting the angle α of the falling water

with the vertical?

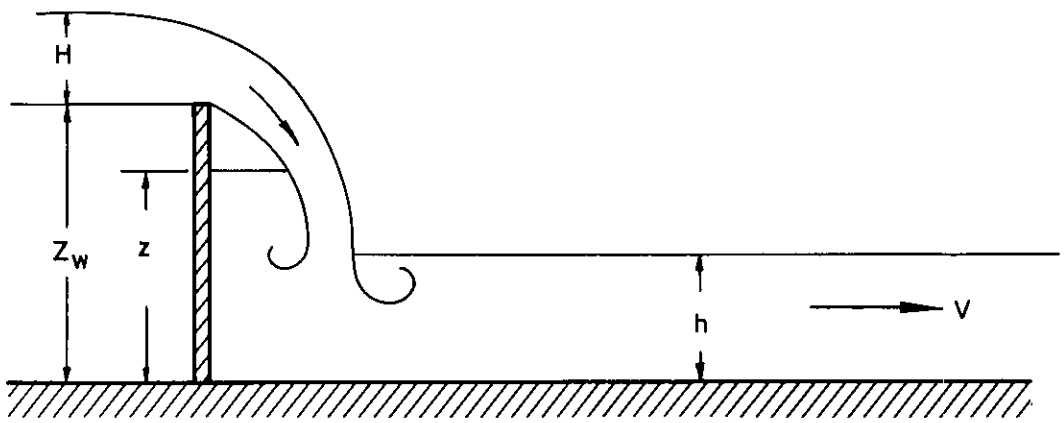

Answer:

$$\rho g \frac{z^2}{2} - \rho g \frac{h^2}{2} = \rho q \left[V - f(\alpha) \right]$$

$$f(\alpha) \cong \sqrt{2 g (z_w + H - h)} \sin \alpha$$

Inserting $q = f(H)$, the function $z = f(H)$ is obtained.

XIII-9 A jet hits a plane perpendicularly. The discharge of the jet is $Q = 2\ ft^3/sec$ and the particle velocity is $V = 20$ ft/sec. The plane is moving at a velocity $U\ (U < V)$ in the direction of the jet. Calculate 1) the total force exerted by the jet on the plane as a function of the velocity U; 2) the power of the jet in H.P.; 3) the power transmitted by the jet to the plane as a function of the velocity U; 4) the efficiency defined as a ratio of these two powers.

Do the same calculations assuming that the plane is replaced by a bucket as shown on the following figure.

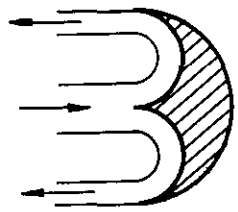

Answer:

$F = \rho Q(V - U)$, Power of the jet: $\rho Q \frac{V^2}{2}$

Transmitted power: $\rho Q(V - U) U$.

In the case of the bucket, $F = 2 \rho Q(V - U)$

XIII-10 Consider the case of a hydraulic jump created by an abrupt drop h of the bottom of a channel. Demonstrate the two following relationships between the upstream water depth y_1 and the downstream water depth y_2.

$$\frac{V_1^2}{g y_1} = \frac{1}{2} \frac{y_2/y_1}{1 - y_2/y_1} \left[1 - \left(\frac{y_2}{y_1} - \frac{h}{y_1}\right)^2\right]$$

or

$$\frac{V_1^2}{g y_1} = \frac{1}{2} \frac{y_2/y_1}{1 - y_2/y_1} \left[\left(\frac{h}{y_1} + 1\right)^2 - \left(\frac{y_2}{y_1}\right)^2\right]$$

depending upon the assumption for the value of the pressure distribution

on the vertical wall forming the abrupt drop.

Answer:

The pressure at the bottom of the vertical wall is $\rho g (y_1 + h)$ or $\rho g y_2$ depending upon the exact location of the jump with respect to the bottom drop.

XIII-11 Demonstrate that the rate of energy dissipation per unit of time by a hydraulic jump is

$$\frac{dE}{dt} = \rho g Q \frac{(h_2 - h_1)^3}{4 h_1 h_2}$$

and demonstrate that the efficiency of a hydraulic jump, defined as the ratio of the specific energy after and before the jump, is

$$\frac{E_2}{E_1} = \frac{(8 F_1^2 + 1)^{3/2} - 4 F_1^2 + 1}{8 F_1^2 (2 + F_1^2)}$$

where

$$F = \frac{V_1}{\sqrt{g h_1}}$$

Subscripts 1 and 2 refer to upstream and downstream values respectively.

XIII-12 Consider a horizontal convergent between two cross sections $A_1 = 2\ ft^2$ and $A_3 = 1\ ft^2$. At section A_1, the pressure $p_1 = 12$ psi and $V_1 = 6$ ft/sec. The shearing force exerted by water is $\tau = \rho f V^2$ where $f = 0.05$ and V is the average velocity as a function of the area of the cross section. Determine the head loss and the total force exerted by the convergent on its anchor as a function of the length of the convergent.

Determine the total force exerted on the anchor as a function of the length of convergent in the case where the convergent is bended by 45° and 90°.

Now, neglecting friction force and taking a length of convergent of 10 feet, determine the total force on the anchor in the straight and curved convergent in the case where V_1 is time dependent such that V_1 ft/sec $= 6 \sin \frac{2\pi}{T} t$ and $T = 20$ sec.

XIII-13 Consider the spillway defined by the following figure. The coefficient of discharge C, defined by $A = C h \sqrt{2 g h}$, is a function of h/h_n such as

$\frac{h}{h_n}$	0.2	0.4	0.8	1	1.2	1.4	1.6	2
C	0.394	0.425	0.470	0.490	0.504	0.518	0.532	0.552

It will be assumed that $h_n = 8$ feet and $h = 12$ feet.

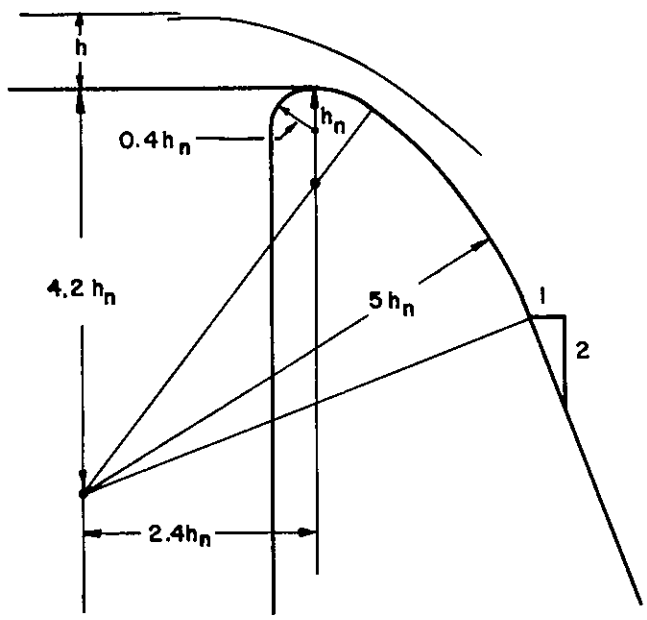

1) Calculate the discharge per linear foot of spillway.
2) Draw the flow net by successive approximation.
3) Determine the pressure distribution from the velocity field and establish whether there is any risk of cavitation.
4) This spillway is ended by a ski-jump (bucket) of 70 foot radius as shown on the following figure. Calculate the pressure distribution on the bucket (without drawing any flow net) and integrate it in order to obtain the total force on the bucket.
5) Determine the total force on the bucket by application of the momentum theorem. Compare the results of 4 and 5.
6) Calculate the distance D between the foot of the dam and the location of impact of the jet.

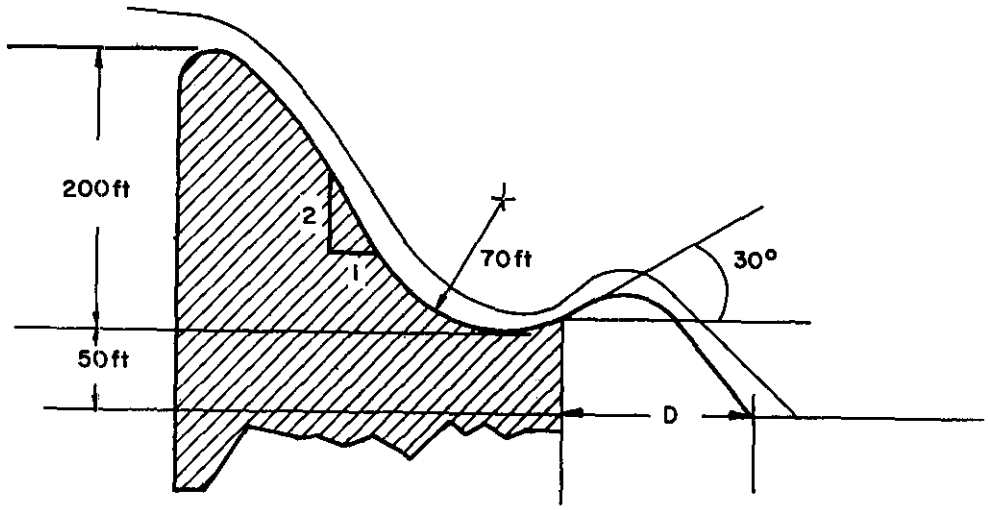

XIII-14 Establish, by choosing a number of simplifying assumptions and by making use of the momentum theorem and the Bernoulli equations, the set of equations giving the distribution of discharges through manifolds with 2 holes, 3 holes, 4 holes, ... n holes of same cross section and subjected to the same pressure. The head losses through the normal section of the main pipe will be neglected.

CHAPTER XIV

BOUNDARY LAYER, FLOW IN PIPES AND DRAG

XIV-1 GENERAL CONCEPT OF BOUNDARY LAYER

XIV-1.1 DEFINITION

XIV-1.1.1 As a viscous flow passes a solid boundary such as a flat-plate or a streamlined body, the influence of viscosity on the flow field is usually confined in a thin layer near the boundary. Outside this layer, the effect of the viscosity is vanishingly small, the fluid behaves like a perfect fluid. This physical picture suggests that the entire flow field can be divided into two domains, and each domain can be treated separately for the purpose of simplifying the mathematical analysis (see Figure XIV-1).

The first domain is called boundary layer, which is a thin layer right in the neighborhood of the boundary. In this domain the flow velocity is zero at the wall and increases rapidly to the velocity corresponding to the free stream velocity. Because of this large velocity gradient, the friction force which is related to the velocity gradient in the normal direction is important.

In the second domain, the influence of viscosity is small. The friction forces can be neglected in comparison to the inertia forces. Hence the viscous terms in the Navier-Stokes equations may be

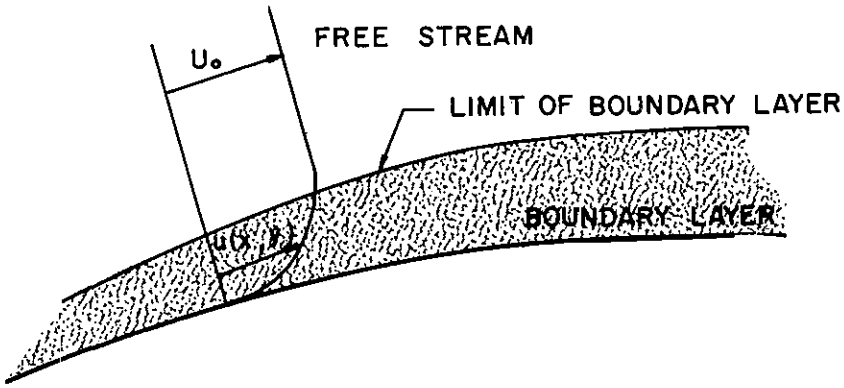

FIGURE XIV-1
TWO FLOW DOMAINS

neglected. The fluid can be assumed to be nonviscous and can be considered as irrotational (see Section II-4.4).

The pressure in the boundary layer as will be shown later is approximately equal to the pressure at the limit of the free stream.

XIV-1.1.2 The larger the value of the Reynolds number, the thinner is the boundary layer.

At a very high Reynolds number, the average flow motion with respect to time is consequently very close to that of a perfect fluid. This point has already been mentioned in Section VIII-1.2 and is further illustrated in Figure XIV-2.

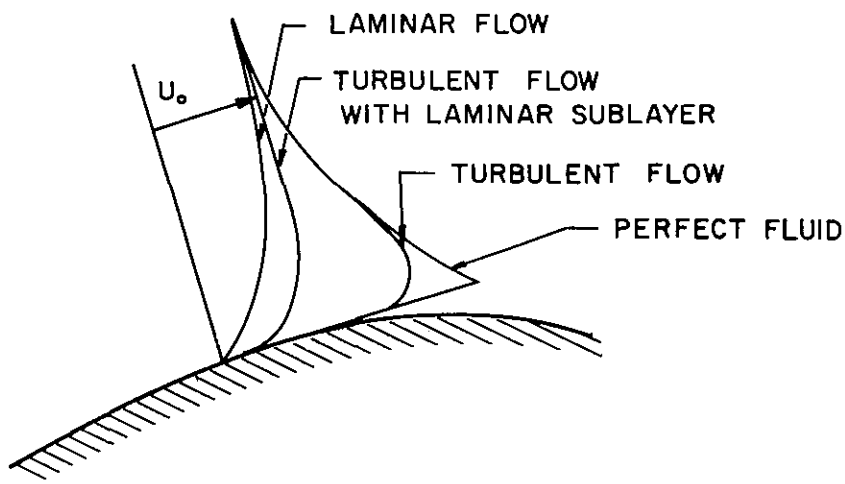

FIGURE XIV-2

INFLUENCE OF THE REYNOLDS NUMBER ON THE VELOCITY DISTRIBUTION AND THE THICKNESS OF THE BOUNDARY LAYER

XIV-1.2 THICKNESS OF BOUNDARY LAYER

XIV-1.2.1 The definition of thickness of the boundary layer is to a certain extent arbitrary because the transition of velocity from zero to the ambient velocity takes place asymptotically. Since the velocity increases very rapidly from the wall to the free stream velocity, it is then possible to specify the thickness of the boundary layer beyond which the effects of the wall friction are rather small. Such a choice is made by defining the thickness of the boundary layer δ to be the distance from the wall at which the velocity differs from the free stream velocity by 1 percent.

Further quantities describing the extent of the boundary layer thickness such as displacement thickness δ^*, and momentum thickness θ are given in the following. The significance of these definitions will be seen in the later sections.

XIV-1.2.2 Displacement Thickness for a Two-dimensional Boundary Layer

Because of the existence of the friction forces, a certain amount of flow along the boundary is retarded within the boundary layer. The amount of retarded flow is

$$\int_{y=0}^{\infty} (U_o - u)\, dy$$

The displacement thickness δ^* is the value by which the wall will have to be shifted in order to give the same discharge as a frictionless fluid.

Consequently, δ^* is defined by the equality (see Figure XIV-3):

$$\delta^* U_o = \int_{y=0}^{\infty} (U_o - u)\, dy$$

i.e.,

$$\delta^* = \frac{1}{U_o} \int_{y=0}^{\infty} (U_o - u)\, dy \cong \frac{1}{U_o} \int_{o}^{\delta_*} (U_o - u)\, dy$$

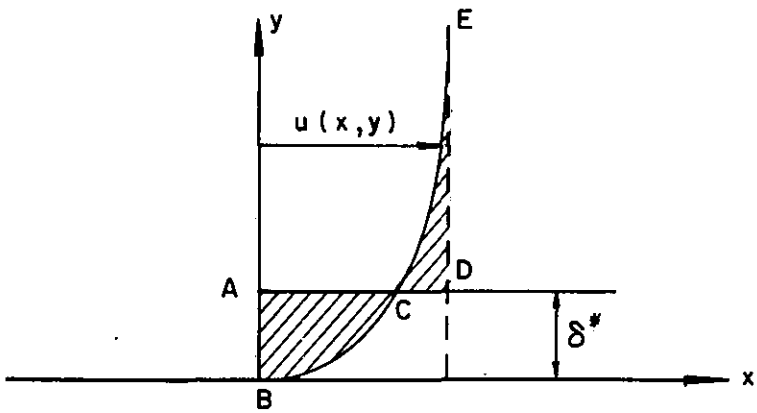

FIGURE XIV-3

DISPLACEMENT THICKNESS (AREA ABC EQUALS AREA CDE)

XIV-1.2.3 Momentum Thickness

Because of the existence of the boundary layer, the momentum flux is reduced in the boundary layer. As a measure of retardation of momentum flux, the momentum thickness is then defined by the thickness

of a layer having the velocity U_o, and of momentum flux equal to the loss of momentum flux due to presence of the boundary layer. The reduction of the momentum flux in the boundary layer is

$$\int_{y=0}^{\infty} \rho u \, (U_o - u) \, dy$$

The momentum thickness is then defined by

$$\rho U_o^2 \theta = \rho \int_0^{\infty} u \, (U_o - u) \, dy$$

i.e.,

$$\theta = \frac{1}{U_o^2} \int_{y=0}^{\infty} u \, (U_o - u) \, dy \cong \frac{1}{U_o^2} \int_0^{\delta} u \, (U_o - u) \, dy$$

XIV-2 LAMINAR BOUNDARY LAYER

XIV-2.1 STEADY UNIFORM FLOW OVER A FLAT PLATE

XIV-2.1.1 Derivation of Equations

The Navier-Stokes equations in the case of a two-dimensional steady motion are

$$u \frac{\partial u}{\partial x} + v \frac{\partial u}{\partial y} = - \frac{1}{\rho} \frac{\partial p^*}{\partial x} + \nu \left(\frac{\partial^2 u}{\partial x^2} + \frac{\partial^2 u}{\partial y^2} \right)$$

$$u \frac{\partial v}{\partial x} + v \frac{\partial v}{\partial y} = - \frac{1}{\rho} \frac{\partial p^*}{\partial y} + \nu \left(\frac{\partial^2 v}{\partial x^2} + \frac{\partial v}{\partial y^2} \right)$$

and the continuity equation

$$\frac{\partial u}{\partial x} + \frac{\partial v}{\partial y} = 0$$

As mentioned in the previous section, the velocity varies rapidly along the y axis, which has a value of zero at the wall and reaches the free stream velocity at a distance of the order of the thickness of the boundary layer δ, while on the other hand the velocity varies very slowly along the plate (see Figure XIV-4). Therefore, all derivatives in the y direction must be much larger than the derivatives in the x direction (see Sections IV-5.2.4 and V-4.3).

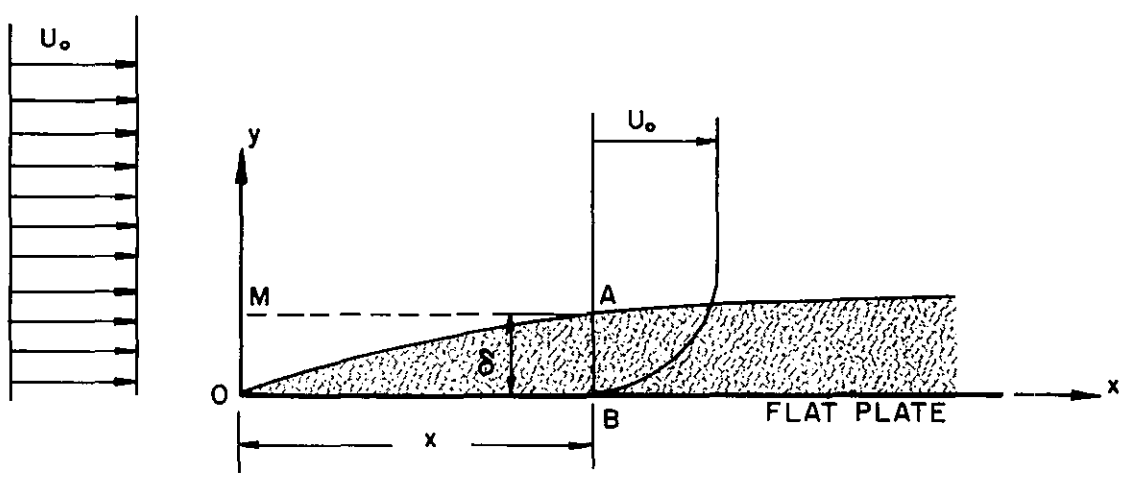

FIGURE XIV-4

SCHEMATIC DRAWING OF THE BOUNDARY LAYER

Consequently, in the first equation,

$$\nu \frac{\partial^2 u}{\partial x^2} << \nu \frac{\partial^2 u}{\partial y^2}$$

and the term $\nu \frac{\partial^2 u}{\partial x^2}$ may be neglected.

Furthermore, the velocity v across the boundary layer is of much smaller value than the velocity u along the boundary layer. As a result, the terms which contain the velocity v in the second equation are of much smaller value than the terms in the first equation and therefore they may be neglected. Finally, the second equation becomes

$$\frac{\partial p^*}{\partial y} = 0$$

This states that the pressure is hydrostatic along a perpendicular to the plate and p^* depends only on x, which can be determined from the nature of the flow in the free stream. Since p^* is a function of x only, one has the equality

$$\frac{\partial p^*}{\partial x} = \frac{dp^*}{dx}$$

and the equations of motion become

$$u \frac{\partial u}{\partial x} + v \frac{\partial u}{\partial y} = - \frac{dp^*}{dx} + \nu \frac{\partial^2 u}{\partial y^2}$$

which is often called the boundary layer equation. In addition to the above equation, the boundary conditions

$$u = v = 0 \qquad \text{at} \qquad y = 0$$

$$u = U_o \qquad \text{when} \qquad y \to \infty$$

and the continuity equation determine the flow field near the flat plate.

In the particular case where U_o is constant, i.e., in the case of a steady uniform flow over a flat plate with zero incidences, as a consequence of the Bernoulli equation applied in the second domain, one has

$$\frac{\partial p^*}{\partial x} \equiv 0$$

at the limit of the boundary layer.

XIV-2.1.2 Establishment of Dimensionless Parameters

As shown in Figure XIV-4 the momentum flux per unit width through OM is equal to $\rho U_o^2 \delta$. The momentum flux through AB is smaller although it remains linearly related to $\rho U_o^2 \delta$. Hence, the difference of momentum is also linearly related to $\rho U_o^2 \delta$. On the other hand, the total friction force per unit width between the sections OM and AB is

linearly related to $\mu \frac{\partial u}{\partial y} x$, and this last term is linearly related to $\frac{\mu U_o x}{\delta}$.

Since the difference of momentum flux between sections OM and AB is due to the friction force along OB, one may equate the difference of momentum flux with the friction force. Consequently one has

$$\int \mu \frac{U_o}{\delta} dx \cong \rho U_o^2 \delta$$

or

$$\delta \cong \sqrt{\frac{\mu x}{\rho U_o}} = \sqrt{\frac{\nu x}{U_o}}$$

(It is pointed out that this equation would not be valid in the case of an arbitrary pressure distribution along the plate.) It is now assumed that the velocity profiles at all distances x from the leading edge are similar, which means that the velocity profile u(y) for varying distances x can be made identical by choosing the proper scale factors for u(y) and y. The free stream velocity U_o and the boundary layer thickness δ are these scale factors. Hence, one has the similarity relationship

$$\frac{u}{U_o} = \phi \left(\frac{y}{\delta}\right)$$

Assuming:

$$\delta \cong \sqrt{\frac{\nu x}{U_o}},$$

one has also

$$\frac{u}{U_o} = \Phi(\eta)$$

where

$$\eta = y\sqrt{\frac{U_o}{\nu x}}$$

XIV-2.1.3 Blasius Equation

Let us now consider the case of flow over a flat plate where $\frac{\partial p^*}{\partial x} = 0$ and introduce the stream function $\psi(x, y)$ such that

$$u = \frac{\partial \psi}{\partial y}, \qquad v = -\frac{\partial \psi}{\partial x}$$

Then the boundary layer equation becomes

$$\frac{\partial \psi}{\partial y}\frac{\partial^2 \psi}{\partial x \partial y} - \frac{\partial \psi}{\partial x}\frac{\partial^2 \psi}{\partial y^2} = \nu \frac{\partial^3 \psi}{\partial y^3}$$

which is a third order nonlinear differential equation.

ψ is equal to $\int_0^y u\, dy$. Substituting u by $U_o\, \Phi(\eta)$, and $y = \eta\sqrt{\frac{\nu x}{U_o}}$, one obtains

$$\psi = \sqrt{U_o\, \nu x}\, f(\eta)$$

The boundary layer equation presented above can now be transformed into an ordinary differential equation as follows:

$$u = \frac{\partial\psi}{\partial y} = U_o f'(\eta)$$

$$v = -\frac{\partial\psi}{\partial x} = \frac{1}{2}\sqrt{\frac{\nu U_o}{x}}\,(\eta f' - f)$$

$$\frac{\partial u}{\partial y} = \frac{\partial^2\psi}{\partial y^2} = U_o\sqrt{\frac{U_o}{\nu x}}\quad f''(\eta)$$

$$\frac{\partial u}{\partial x} = \frac{\partial^2\psi}{\partial x\partial y} = -\frac{U_o\eta}{2x}\quad f''(\eta)$$

$$\frac{\partial^3\psi}{\partial y^3} = U_o\left(\frac{U_o}{\nu x}\right) f'''(\eta)$$

Substituting then into the boundary layer equation, one obtains Blasius' equation

$$2f''' + ff'' = 0$$

and the boundary conditions

$$f = f' = 0 \qquad \text{at} \qquad \eta = 0$$

$$f' = 1 \qquad \text{at} \qquad \eta = \infty$$

Hence all the coefficients other than the zeros can be expressed as a function of A_2, while the constant A_2 can be determined from the boundary condition:

$$y \to \infty \qquad\qquad u = U_o$$

i.e., when $\eta \to \infty$, $f'(\eta) = 1$ through numerical calculations. Once A_2 is obtained, $f(\eta)$ can be calculated. The result of $f(\eta)$ together with $f'(\eta)$ and $f''(\eta)$ are plotted in Figure XIV-5. This gives the Blasius solution of the laminar boundary-layer equations.

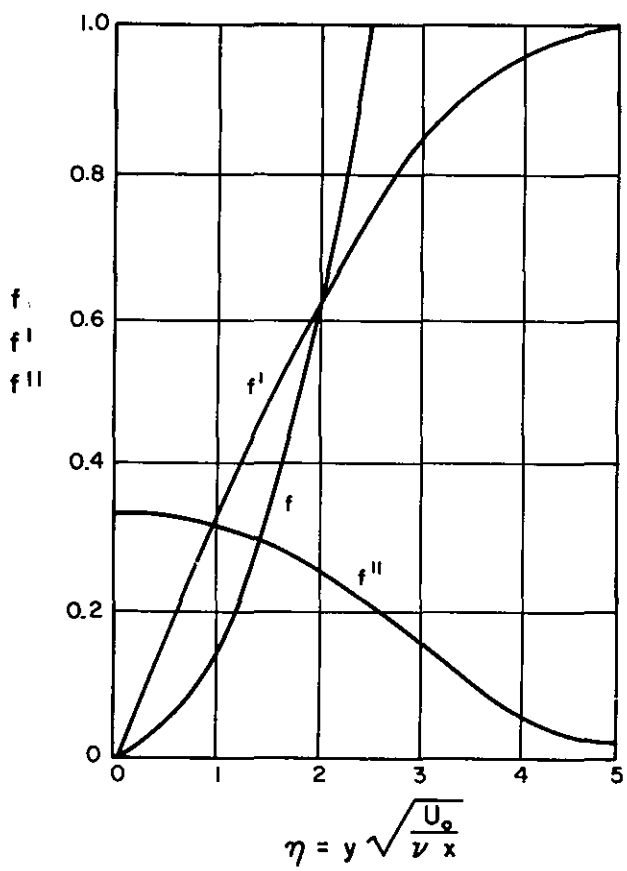

FIGURE XIV-5

SOLUTION OF THE BLASIUS EQUATION

XIV-2.1.4 Solution of the Blasius Equation

The general solution of the Blasius equation cannot be given in a closed form. However, the solution can be obtained through power series expansion. The power series expansion near $\eta = 0$ is assumed to be of the form of

$$f(\eta) = A_0 + A_1\eta + A_2 \frac{\eta^2}{2!} + A_3 \frac{\eta^3}{3!} + \ldots$$

where A_n are constants. From the boundary conditions

$$f = f' = 0 \qquad \text{at} \qquad \eta = 0$$

one obtains $A_0 = A_1 = 0$.

Substituting the power series with $A_0 = A_1 = 0$ into the Blasius equation, one obtains

$$2A_3 + 2A_4\eta + \left(A_2^2 + 2A_5\right)\frac{\eta^2}{2!} + \left(4\,A_2A_3 + 2\,A_6\right)\frac{\eta^3}{3!} + \ldots = 0$$

This must be equal to zero for any value of η, which can be verified only if all the coefficients of each term are equal to zero. Consequently one has

$$A_3 = A_4 = A_6 = A_7 = A_9 = \ldots = 0$$

$$A_5 = -\frac{1}{2}\,A_2^2\,; \quad A_8 = -\frac{11}{2}\,A_2A_5 = \frac{11}{4}\,A_2^3\,; \ldots$$

XIV-2.1.5 Boundary Layer Thickness

The boundary layer thickness for the steady uniform flow over a flat plate as defined in Section XIV-1.2.1, (that is the distance from the wall at which $u = 0.99\ U_o$) can be obtained from Figure XIV-5, where $\eta \approx 5.0$,

i.e.,
$$\eta = \frac{\delta}{\sqrt{\frac{\nu x}{U_o}}} \approx 5$$

Hence the boundary layer thickness δ becomes

$$\delta \approx 5.0 \frac{x}{\sqrt{\frac{xU_o}{\nu}}}$$

XIV-2.1.6 Shear Stress and Resistance Coefficient

From the numerical calculation in Section XIV-2.1.4, or the graph presented in Figure XIV-4, one obtains:

$$f''(0) = 0.332$$

Therefore the shear stress at the wall is

$$\tau_o(x) = \mu \left(\frac{\partial u}{\partial y}\right)_{y=0} = \mu U_o \sqrt{\frac{U_o}{\nu x}}\ f''(0) = \frac{0.332}{\sqrt{R_x}}\ \rho U_o^2$$

where $R_x = \frac{U_o x}{\nu}$ is the Reynolds number based on the distance, x, from the leading edge of the plate.

The resistance force on one side of the plate over length ℓ per unit width is equal to

$$D = \int_0^{\ell} \tau_o \, dx = 0.664 \, \rho \, U_o^2 \, \ell \Big/ \left(\frac{U_o \ell}{\nu}\right)^{1/2}$$

and the resistance coefficient C_f is

$$C_f = \frac{D}{\frac{1}{2} \rho \ell U_o^2} = \frac{1.328}{\sqrt{R_\ell}}$$

where $R_\ell = \frac{U_o \ell}{\nu}$ is the Reynolds number based on the length of the plate.

XIV-2.2 MOMENTUM INTEGRAL EQUATION FOR BOUNDARY LAYER

XIV-2.2.1 The Method of Solution

XIV-2.2.1.1 As demonstrated in the previous most simple example, i.e., the laminar boundary layer on a semi-infinite flat plate with zero incidence, the calculation is cumbersome and time consuming. It is desirable to find some approximate method to evaluate the necessary quantities required for the practical use. In particular the case where $\frac{\partial p^*}{\partial x}$ can no longer be considered as zero, such as in the case of flow past a wedge, can be analyzed by the momentum integral equation.

Such a method which was developed by von Kármán is based on the momentum principle. The so-called von Kármán's momentum integral formula is derived in the following.

Considering in two-dimensional steady flow, an element of volume ABCD as shown in Figure XIV-6, the momentum integral method consists of applying the momentum theorem to an element of fluid ABCD along the boundary, i.e., the variation of momentum flux between the boundary AD, BC, and CD, is equal to the applied forces. The applied forces consist of the pressure force acting on the boundaries and the shear stress on the wall. Each of these will be considered separately in the following. Then the equality will give the momentum integral equation. Of course, in the case where the flow is unsteady, the additional term resulting from unsteady flow also has to be considered in the equation (see Section XIII-2.6).

XIV-2.2.1.2 The discharge through AD is

$$\int_0^\delta u\,dy \Big|_{x=x_1}$$

and the discharge through CB is

$$\int_0^\delta u\,dy \Big|_{x=x_1+dx} = \int_0^\delta u\,dy \Big|_{x=x_1} + \frac{d}{dx}\left[\int_0^\delta u\,dy\right] dx$$

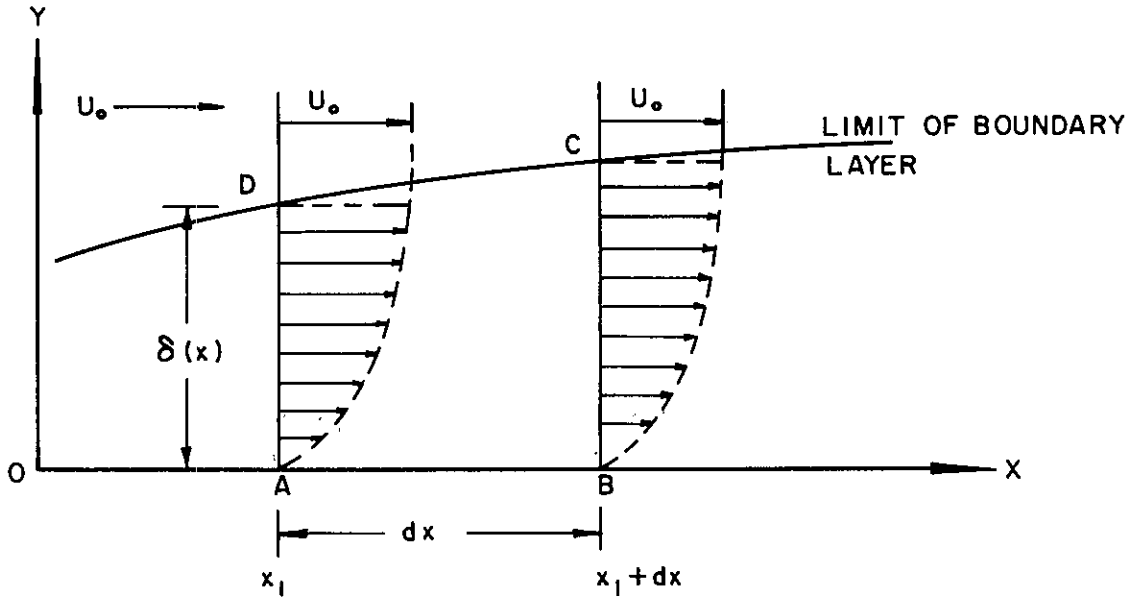

FIGURE XIV-6

CONTROL VOLUME FOR THE MOMENTUM INTEGRAL

The net out-flow over the vertical control surface is equal to the difference, i.e.,

$$\frac{d}{dx}\left[\int_0^\delta u\,dy\right]dx$$

This amount of flow must be supplied through the top boundary for the sake of continuity.

XIV-2.2.1.3 Similarly the x-momentum flux through AD is

$$\rho\int_0^\delta u^2\,dy\Big|_{x=x_1}$$

and through BC is

$$\rho\int_0^\delta u^2\,dy\Big|_{x=x_1+dx} = \rho\int_0^\delta u^2 dy + \rho\frac{d}{dx}\left[\int_0^\delta u^2\,dy\right]dx$$

The net x-momentum out-flow through vertical control surface is equal to the difference

$$\rho\frac{d}{dx}\left[\int_0^\delta u^2\,dy\right]dx$$

On the other hand, since the velocity at the limit of the boundary layer is U_o the x-momentum in-flow over the top is equal to the mass flow ρU_o

times the fluid discharge through the control surface. This fluid discharge has been found in the previous section to be

$$\frac{d}{dx}\left[\int_0^\delta u\, dy\right] dx$$

Therefore, the x-momentum in-flow over the top boundary DC is

$$\rho U_o \frac{d}{dx}\left[\int_0^\delta u\, dy\right] dx$$

One, therefore obtains the total variation of x-momentum flux through ABCD, which is

$$\rho U_o \frac{d}{dx}\left[\int_0^\delta u\, dy\right] dx - \rho \frac{d}{dx}\left[\int_0^\delta u^2\, dy\right] dx$$

XIV-2.2.1.4 The pressure force acting on the limit of the volume ABCD in the OX direction are now considered.

The pressure force on AD is $p\delta$, and on CB is $\left(p + \frac{dp}{dx} dx\right)$ $\left(\delta + \frac{d\delta}{dx} dx\right)$ since the variation of boundary layer thickness with distance is small, $\frac{d\delta}{dx} dx$ may be neglected. But it is now considered that $\frac{dp}{dx}$ dx may not be small.

The pressure force on DC acting in the OX direction is also neglected for the same reason: $\frac{d\delta}{dx}$ is small.

Finally the net pressure force remains: $-\delta \frac{dp}{dx}$ dx.

This last term may also be expressed in terms of the velocity U_o as follows.

From the Bernoulli equation applied to the irrotational flow outside the boundary layer, one has

$$\frac{dp}{dx} = -\rho U_o \frac{dU_o}{dx}$$

Hence the net pressure force is:

$$-\delta \frac{dp}{dx} dx = \rho U_o \delta \frac{dU_o}{dx} dx$$

XIV-2.2.1.5 Now that all the terms have been established, it is possible to write the momentum integral equation for the volume ABCD. One obtains the momentum integral by equating the X-momentum flux calculated in the previous sections and the net pressure force to the shear force on the boundary, that is,

$$\tau_o dx = U_o \frac{d}{dx}\left[\int_0^\delta \rho u dy\right] dx - \frac{d}{dx}\left[\int_0^\delta \rho u^2 dy\right] dx$$

$$+ \rho U_o \delta \frac{dU_o}{dx} dx$$

Dividing the above equation by dx and rearranging the terms, one obtains

$$\tau_o = \frac{d}{dx}\left[\int_0^\delta \rho u(U_o - u)\, dy\right] + \frac{dU_o}{dx} \int_0^\delta \rho\, (U_o - u)\, dy$$

Introducing the displacement thickness, δ^* and the momentum thickness θ, the the momentum integral can be written

$$\frac{\tau_o}{\rho} = \frac{d}{dx}(U_o^2\,\theta) + \delta^* U_o \frac{dU_o}{dx}$$

Since no assumption is being made on the nature of the flow, this method is applicable to laminar as well as turbulent flows. However, in turbulent flow, the velocity should be considered to be mean value.

XIV-2.2.2 Examples for the Use of Momentum Integral

For the purpose of comparison, the previous problem, steady uniform laminar flow over a flat plate, is chosen for this evaluation. In this case U_o is constant. Therefore, the momentum integral becomes

$$\frac{\tau_o}{\rho U_o^2} = \frac{d\theta}{dx}$$

First, one assumes a velocity profile, say

$$u(y) = a_o + a_1 y + a_2 y^2$$

where a_o, a_1, a_2 are constants which can be determined from boundary conditions, that is,

$$u = 0 \text{ at } y = 0 \quad \text{implies} \quad a_o = 0$$

$$u = U_o \text{ at } y = \delta \quad \text{implies} \quad a_1\delta + a_2\delta^2 = U_o$$

$$\frac{du}{dy} \cong 0 \text{ at } y = \delta \quad \text{implies} \quad a_1 + 2a_2\delta = 0$$

Solving the equations, one obtains

$$a_1 = 2\frac{U_o}{\delta}$$

$$a_2 = -\frac{U_o}{\delta^2}$$

Therefore, the velocity profile is

$$\frac{u}{U_o} = 2\left(\frac{y}{\delta}\right) - \left(\frac{y}{\delta}\right)^2$$

and one can find the momentum thickness θ to be

$$\theta = \int_0^\delta \frac{u}{U_o}\left(1 - \frac{u}{U_o}\right) dy = \frac{2}{15} \quad \delta$$

and

$$\frac{\tau_o}{\rho} = \nu \frac{\partial u}{\partial y}\bigg|_{y=0} = \frac{2\nu U_o}{\delta}$$

Substituting into momentum integral equation, one has

$$\delta \frac{d\delta}{dx} = \frac{15\nu}{U_o}$$

Integrating and using the boundary condition $x = 0$, $\delta = 0$ one obtains

$$\delta = 5.5 \sqrt{\frac{\nu x}{U_o}} = \frac{5.5x}{\sqrt{R_x}}$$

and the normalized shear stress is equal to

$$\frac{\tau_o}{\rho U_o^2} = \frac{\mu}{\rho U_o^2} \left. \frac{\partial u}{\partial y} \right|_0 = \frac{\mu}{\rho U_o^2} \cdot \frac{2\,U_o}{\delta} = \frac{0.366}{\sqrt{R_x}}$$

Both the boundary layer thickness and normalized shear stress are close to the exact value obtained in Sections XIV-2.1.5 and XIV-2.1.6.

XIV-2.3 UNIFORM UNSTEADY FLOW OVER AN INFINITE FLAT PLATE

XIV-2.3.1 The Governing Equation of Motion

Because the plate is of infinite length, the derivatives with respect to x should be zero. That is,

$$\frac{\partial u}{\partial x} = 0$$

From the continuity equation

$$\frac{\partial u}{\partial x} + \frac{\partial v}{\partial y} = 0$$

it follows that $\frac{\partial v}{\partial y} = 0$. Hence v is identical to zero because it is zero at the boundary. Furthermore, the pressure p^* is constant

everywhere, because of the infinite fluid field. Finally, the Navier-Stokes equation becomes

$$\frac{\partial u}{\partial t} = \nu \frac{\partial^2 u}{\partial y^2}$$

It is seen that this equation is linear, and consequently a number of exact solutions can be found. If the fluid is moving at a speed $U_o(t)$ and the plate is fixed, the boundary conditions are

$$u = 0 \qquad \text{at} \qquad y = 0$$
$$u = U_o(t) \qquad \text{when} \qquad y \to \infty$$

If the fluid at infinity is fixed and the plate moving at velocity $U_o(t)$, the boundary conditions are

$$u = U_o(t) \qquad \text{at} \qquad y = 0$$
$$u = 0 \qquad \text{when} \qquad y \to \infty$$

XIV-2.3.2 Impulsive Motion of an Infinite Flat Plate

The case of an impulsive motion of an infinite flat plate is given as an example. In that case $u = 0$ for all y when $t \leq 0$, and $u = U_o$ at $y = 0$ when $t > 0$, and $u = 0$ when $y \to \infty$.

The partial differential equation can be changed into an ordinary differential equation by introducing the dimensionless variable

$$\eta = \frac{y}{\sqrt{2\nu t}}$$

After performing the required differentiations and substituting into the equation, one obtains

$$\frac{d^2u}{d\eta^2} + \eta \frac{du}{d\eta} = 0$$

Integrating with respect to η, one gets

$$u(y, t) = C_1 \int_0^{y/\sqrt{2\nu t}} e^{-\eta^2/2} \, d\eta + C_2$$

where C_2 can be determined by the boundary conditions: $u = U_o$, for $\eta = 0$ which gives $C_2 = U_o$. The constant C_1 is determined from the initial condition $u = 0$ at $t = 0$ ($\eta = y/\sqrt{2\nu t} = \infty$). Substituting into the above equation, one has

$$C_1 \int_0^{\infty} e^{-\eta^2/2} \, d\eta + U_o = 0$$

The above integral has a value of $\sqrt{\pi/2}$ hence $C_1 = -\sqrt{2/\pi}\, U_o$.

Substituting C_1, C_2 into the equation, one obtains the velocity distribution

$$u = U_o \left[1 - \sqrt{2/\pi} \int_0^{y/\sqrt{2\nu t}} e^{-\eta^2} \, d\eta \right]$$

or

$$u = U_o \operatorname{erfc} \frac{y}{\sqrt{2\nu t}}$$

The velocity distribution is presented in Figure XIV-7. It is clear that the velocity profile for different times are similar; they can be reduced to one curve by using the dimensionless variables u/U_o and $\eta = \frac{y}{\sqrt{2\nu t}}$.

XIV-2.4 BOUNDARY LAYERS OF AN OSCILLATING FLAT PLATE

As an infinite flat plate oscillates parallel to itself, the governing equation of motion is the same as the impulsive motion of an infinite flat plate, that is,

$$\frac{\partial u}{\partial t} = \nu \frac{\partial^2 u}{\partial y^2}$$

while the boundary conditions may be given by

$$u(0, t) = U_o \cos kt$$

$$u(\infty, t) = 0$$

for the plate oscillates periodically.

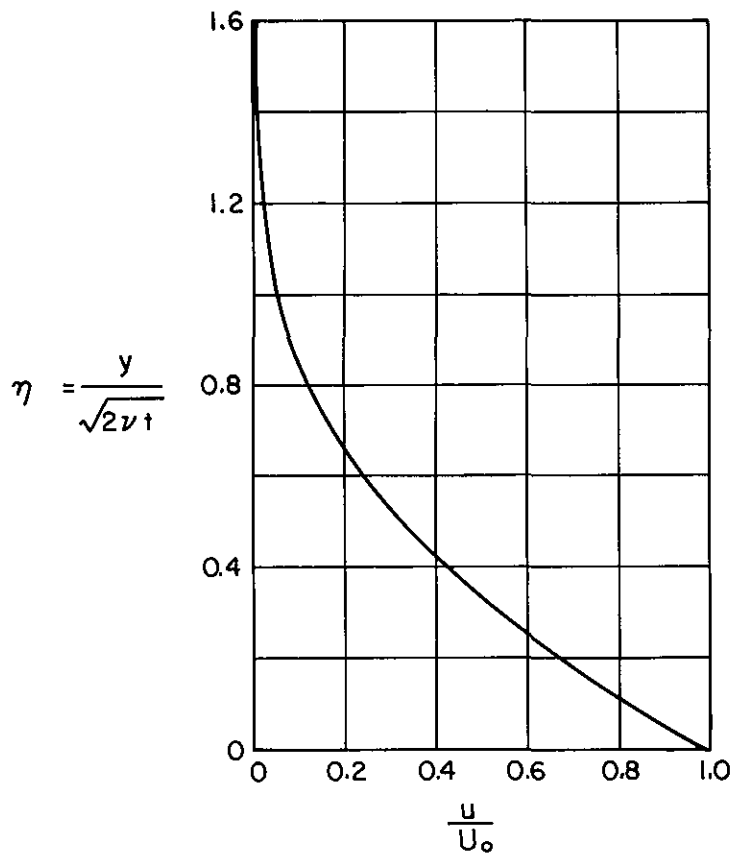

FIGURE XIV-7
VELOCITY DISTRIBUTION NEAR THE INFINITE FLAT PLATE UNDER IMPULSIVE MOTION

The solution of this equation is

$$u(y, t) = U_o \exp\left(-\sqrt{\frac{k}{2\nu}}\, y\right) \cos\left(kt - \sqrt{\frac{k}{2\nu}}\, y\right)$$

The velocity profile, $u(y, t)$ has the form of damped harmonic oscillation, with an amplitude of $U_o \exp\left(-\sqrt{\frac{k}{2\nu}}\, y\right)$. The amplitude decreases exponentially from the plate. The velocity profiles for several instants of time are plotted in Figure XIV-8.

A similar solution applies in the case where the fluid is moving at a velocity

$$u = U_o \cos kt$$

and the plate is fixed. Such solution is of particular interest for studying the motion in the boundary layer of a periodic gravity wave and the wave damping by bottom friction.

XIV-3 TURBULENT BOUNDARY LAYER

XIV-3.1 GENERAL DESCRIPTION

For a laminar boundary layer, it has been seen that its thickness increases with the distance x from the edge of the plate. As this boundary layer thickness increases, the flow has a tendency to become turbulent. The criteria of the transition from laminar to turbulent is usually based on the Reynolds number $U_o x/\nu$,

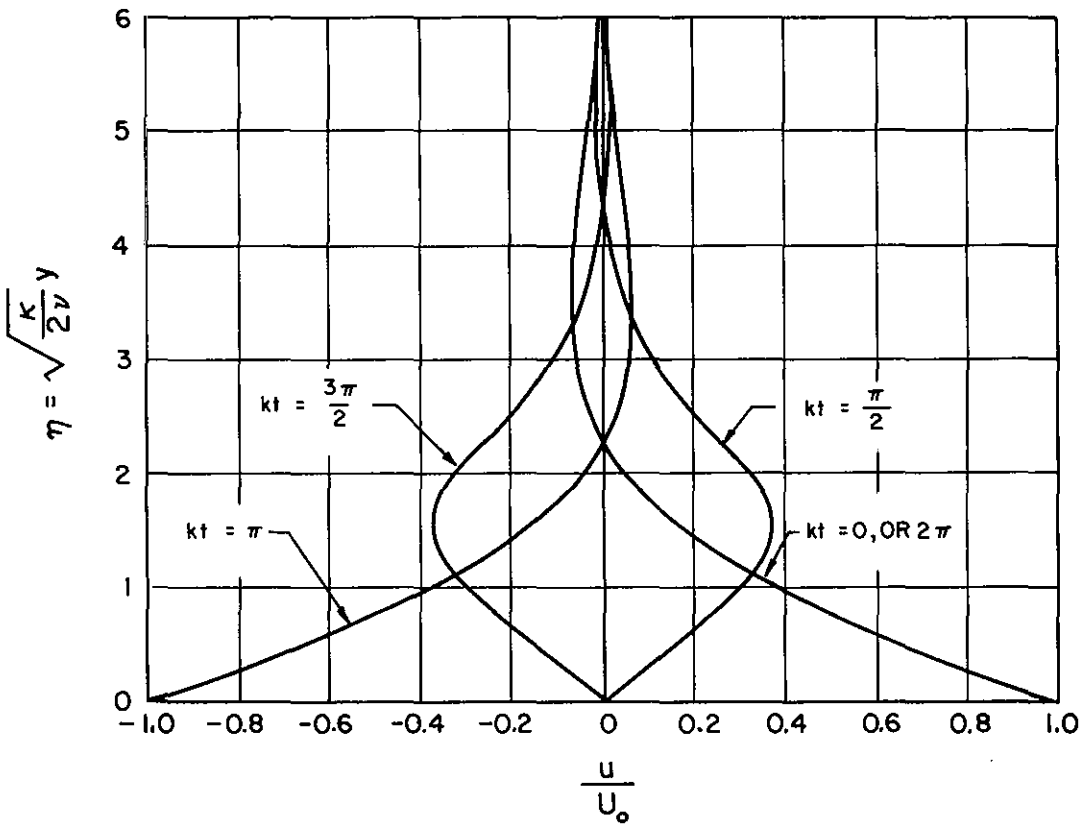

FIGURE XIV-8
VELOCITY DISTRIBUTION NEAR AN
OSCILLATING INFINITE FLAT PLATE

in which U_o is the free stream velocity, x is the distance from the edge of the plate and ν is the kinematic viscosity.

The location x or the value of Reynolds number at which the boundary layer becomes turbulent depends somewhat on the turbulence level of the free stream. It ranges from 10^5 to 10^6. The shear stress acting on the boundary is much larger in the turbulent boundary layer than in the laminar boundary layer, therefore the determination of the location of this transition is not only of theoretical interest but can also have some practical uses.

After transition, the main part of the flow in the boundary layer is turbulent. However, immediately adjacent to the wall, the turbulent fluctuations are suppressed by the presence of the wall. The flow field in this region can be divided into three domains: the laminar sublayer, the turbulent boundary layer, and the free stream (see Figure XIV-9). If the boundary is rough, laminar sublayer may be destroyed by the presence of the roughness elements. A detailed discussion of this is given in Section XIV-4.3.

a) Laminar Sublayer: The velocity distribution is determined by the viscous force, that is,

$$\tau = \rho\nu \frac{du}{dy}$$

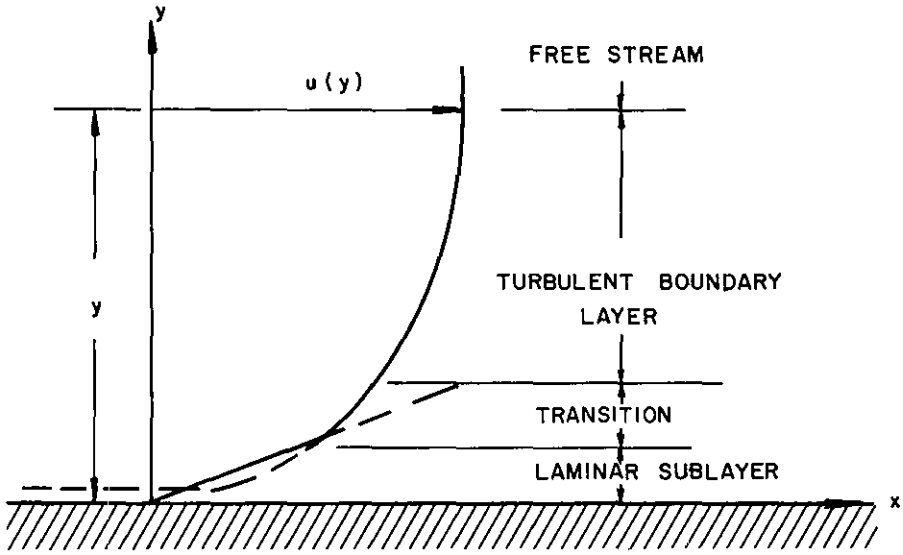

a) SMOOTH WALL

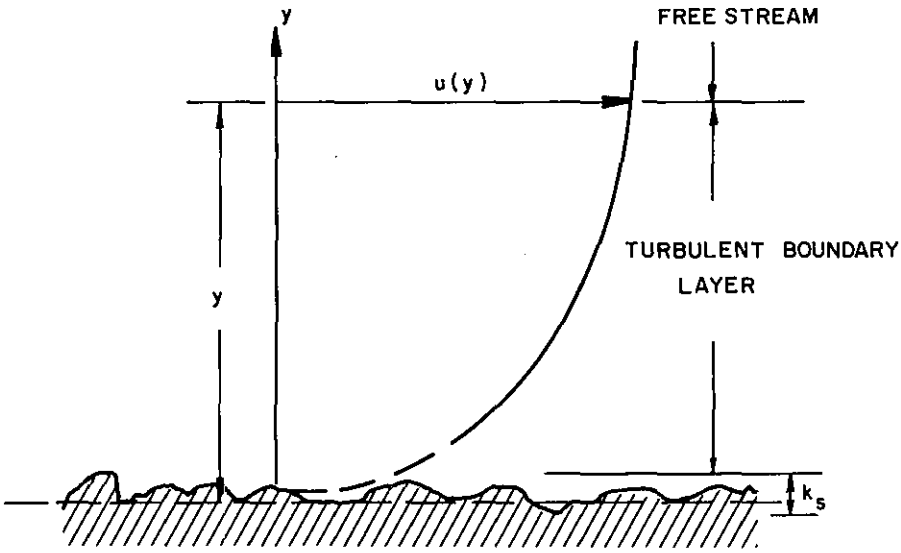

b) ROUGH WALL (LAMINAR SUBLAYER MAY EXIST PROVIDED $\frac{k_s u_*}{\nu} < 5$)

FIGURE XIV-9
TURBULENT VELOCITY DISTRIBUTIONS
NEAR THE WALL

Because this layer is very thin, it is reasonable to assume that τ is constant within this layer and equal to the shear stress at the wall τ_o. After integration, the equation becomes

$$u = \frac{\tau_o}{\rho} \frac{y}{\nu}$$

and defining

$$u_* = \sqrt{\frac{\tau_o}{\rho}}$$

one finally obtains

$$\frac{u}{u_*} = \frac{u_* y}{\nu}$$

u_* is called shear velocity.

The name "laminar sublayer" does not mean the flow in this region is entirely laminar. Strong eddies generated in the turbulent flow often break through this thin layer and form turbulent spots in the sublayer. Therefore, to avoid confusion, the name "viscous sublayer" is sometimes used.

b) Turbulent Boundary Layer: In this domain, the effect of turbulent fluctuation creates a large turbulent shear stress, while the effect of viscous shear is very small. Therefore, the velocity distribution is determined by the effect of turbulent shear stress which results in a logarithmic velocity distribution, as discussed in Section VIII-3.5.

c) Free Stream Flow: The effect of the boundary shear stress in this domain is small. Therefore the flow field can be determined by considering that the flow is nonviscous.

However, there are no sharp boundaries between each region, and the concept of each domain is therefore to some extent qualitative. A schematic drawing of the three domains of flow and the flow pattern before the formation of the turbulent boundary layer is given in Figure XIV-10.

XIV-3.2 RESISTANCE AND BOUNDARY LAYER GROWTH ON A FLAT PLATE

Owing to the complicated flow conditions in the turbulent boundary layer, the exact solution of the equation of motion is not possible. One mathematical method available at present consists of determining the characteristics of the turbulent boundary layers by application of the momentum integral method which has been described in Section XIV-2.2.

The purpose of the use of momentum integral method in the turbulent boundary layer is to evaluate the variations with distance of the thickness of this boundary layer and the boundary shear stress. The use of this integral method involves the assumptions of a velocity profile at one location and similar profiles along the boundary. In the turbulent boundary layer, it is rather difficult to assume a velocity profile with sufficient accuracy because of the complicated flow field. Therefore,

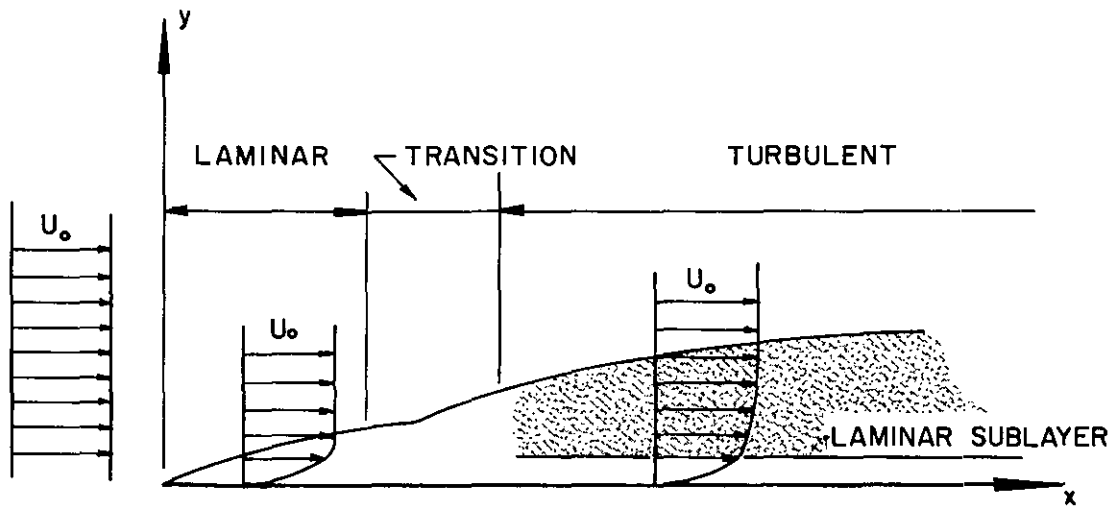

FIGURE XIV-10
SCHEMATIC REPRESENTATION OF THE LAMINAR AND TURBULENT BOUNDARY LAYER

some experimental results have to be used as a base in order to get a good prediction of the variations of thickness of the boundary layer and the resistance with distance. Based on the experimental results the velocity profile can be represented by

$$\frac{u}{u_*} = 8.74 \left(\frac{u_* y}{\nu}\right)^{1/7}$$

where $u_* = \sqrt{\tau_o/\rho}$ is the shear velocity. Since the velocity at $y = \delta$ is equal to U_o, then

$$\frac{U_o}{u_*} = 8.74 \left(\frac{\delta u_*}{\nu}\right)^{1/7}$$

or $\tau_o = 0.0225\, \rho U_o^2 \left(\frac{\nu}{U_o \delta}\right)^{1/4}$. From the first two equations, one can immediately get,

$$\frac{u}{U_o} = \left(\frac{y}{\delta}\right)^{1/7}$$

From the definition of the momentum thickness, one has successively

$$\theta = \int_0^\delta \frac{u}{U_o}\left(1 - \frac{u}{U_o}\right) dy = \delta \int_0^1 \left(\frac{y}{\delta}\right)^{1/7}\left[1 - \left(\frac{y}{\delta}\right)^{1/7}\right] d\left(\frac{y}{\delta}\right) = \frac{7}{72}\,\delta$$

Substituting momentum thickness θ and the wall shear stress τ_o into the momentum integral equation

$$\frac{\tau_o}{\rho U_o^2} = \frac{d\theta}{dx} \qquad (U_o = \text{constant})$$

one obtains

$$0.0225 \left(\frac{\nu}{U_o \delta}\right)^{1/4} = \frac{7}{72} \frac{d\delta}{dx}$$

which is the differential equation for δ. Integrating this equation from initial value $\delta = \delta_o$ at $x = x_o$ where boundary layer starts to become turbulent, to a given point x measured from the leading edge of the plate yields:

$$\delta^{5/4} - \delta_o^{5/4} = 0.29 \frac{\nu}{U_o} (x - x_o)$$

If one assumes that the boundary layer becomes turbulent at the edge of the plate, that is the initial value above can be replaced by $\delta = 0$ at $x = 0$, the above equation gives directly:

$$\delta = 0.37 \left(\frac{U_o}{\nu}\right)^{-1/5} x^{4/5}$$

which indicates that the boundary layer thickness increases with the power $x^{4/5}$, whereas in the laminar boundary layer, the thickness increases with $x^{1/2}$.

The resistance force per unit width of length ℓ is

$$R=\int_0^{\ell} \tau_o \, dx = \rho U_o^2 \theta(\ell)$$

$$= \frac{7}{72} \rho U_o^2 \delta = 0.036 \rho U_o^2 \left(\frac{U_o}{\nu}\right)^{-1/5} \ell^{4/5}$$

and the resistance coefficient C_f is:

$$C_f = \frac{R}{\frac{1}{2} \rho U_o^2 \ell} = 0.072 \left(\frac{U_o \ell}{\nu}\right)^{-1/5}$$

In the range of Reynolds number $5 \times 10^5 < R_e < 10^7$, the last equation gives very good agreement with experimental results.

The value of resistance coefficient for the turbulent boundary layer as well as laminar boundary layer are plotted in Figure XIV-11.

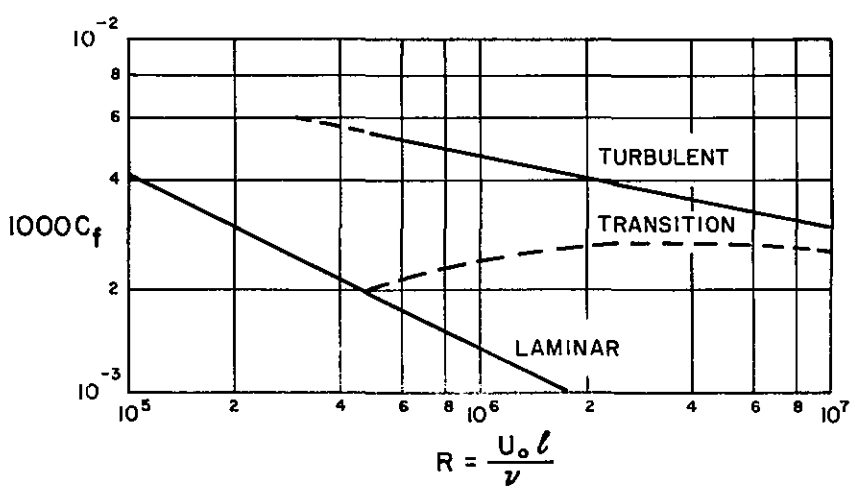

FIGURE XIV-11

RESISTANCE ON A SMOOTH FLAT PLATE

XIV-4 FLOW IN PIPES

XIV-4.1 STEADY LAMINAR FLOW IN PIPES

Laminar flow in pipes scarely occurs in practice. However, a rather full discussion is given because it permits a simple and rational analysis which is of some help in the understanding of the turbulent flow where conditions are so complicated that a complete theoretical treatment is still not possible.

The flow conditions can be determined directly from the application of the Navier-Stokes equation. However, it is much simpler to derive the equation of motion directly from the consideration between the shear stress and the pressure drop. As shown in Figure XIV-12, one could easily obtain the following equation by consideration of force equilibrium on the cylindrical element.

$$\Delta p \pi r^2 = 2\pi r \tau \ell$$

This assumes that p* is a constant across a pipe section, a result which can be derived from the Navier-Stokes equation. For the laminar flow, the shear stress is simply,

$$\tau = \mu \frac{du}{dr}$$

Substituting into the above equation, one obtains

$$du = \frac{\Delta p}{2\ell\mu} \, r dr$$

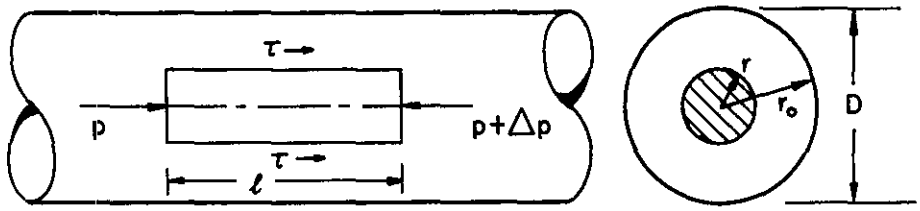

FIGURE XIV-12

FLUID ELEMENT UNDER FORCE EQUILIBRIUM

After integration, the velocity profile becomes

$$u = \frac{\Delta p}{2\ell\mu} \frac{r^2}{2} + c$$

The constant c can be determined from the boundary condition

$$u = 0 \qquad \text{at} \qquad r = r_o$$

This leads to the velocity distribution in the pipe

$$u = \frac{\Delta p}{4\ell\mu} (r_o^2 - r^2)$$

which has the form of a symmetrical paraboloid. By integration, the average velocity V can be found as follows:

$$V = \frac{Q}{\pi r_o^2} = \frac{1}{\pi r_o^2} \int_0^{r_o} u 2\pi r \, dr = \frac{\Delta p r_o^2}{8\ell\mu}$$

Rearranging the above equation, one obtains

$$\frac{\Delta p}{\rho g} = 64 \frac{\mu\ell}{V\rho D^2} \frac{V^2}{2g}$$

where $D = 2r_o$.

Comparing the last equation with Darcy-Weisbach equation, obtained by dimensional analysis namely:

$$\Delta H = \frac{\Delta p}{\rho g} = f \frac{\ell}{D} \frac{V^2}{2g}$$

where ΔH is the head loss, f is the friction factor, one obtains immediately the friction factor f for the laminar flow in a circular pipe

$$f = \frac{64\mu}{VD\rho} = \frac{64}{R_e}$$

XIV-4.2 TURBULENT VELOCITY DISTRIBUTIONS AND RESISTANCE LAW FOR SMOOTH PIPES

XIV-4.2.1 Velocity Distributions

As the flow in the pipe becomes turbulent, the analytical determination of the velocity distribution is not possible. As in the

case of turbulent boundary layer, one has to determine the velocity profile based on logical assumptions and experimental verifications. One of the best known assumptions in regard to the velocity distribution near the wall is so called the law of the wall which is based on the assumption that the velocity u at a distance y from the wall depends on the tangential stress τ_o and on the viscosity μ and density ρ. Therefore, one may write

$$F(\tau_o, u, y, \mu, \rho) = 0$$

(It is understood that u means the average velocity with respect to time and should actually be written $\bar{u}$ (see Section VII-1.5). The bar will be omitted in the following sections for the sake of simplicity.) Based on the dimensional analysis, one obtains the dimensionless form,

$$\frac{u}{\sqrt{\tau_o/\rho}} = f\left(\frac{\sqrt{\frac{\tau_o}{\rho}}\, y}{\nu}\right)$$

similar to the case of flow over a flat plate (see XIV-3.2). The functional relationship in the laminar sublayer has been derived in Section XIV-3.1 to be

$$\frac{u}{u_*} = \frac{u_* y}{\nu}$$

where $u_* = \sqrt{\tau_o/\rho}$, while outside the laminar sublayer and a transitional layer the turbulent stress dominates and the velocity profile follows

logarithmic law which has been derived in Section VIII-3.5 to be

$$\frac{u}{u_*} = \frac{1}{k} \ln y + C_1$$

In writing the dimensionless form, the velocity distribution reads

$$\frac{u}{u_*} = \frac{1}{k} \ln \frac{yu_*}{\nu} + C_2$$

where

$$C_2 = -\frac{1}{k} \ln \frac{u_*}{\nu} + C_1$$

The value of C_2 and the range of validity of these two equations which describes the velocity distribution in laminar sublayer and the turbulence flow have to be determined experimentally.

Large amounts of experimental work for measuring the velocity distribution in circular pipes have been performed. Typical velocity profiles are shown on Figure XIV-13a. The results are also presented in terms of the dimensionless variables $\frac{u}{u_*}$ and $\frac{u_* y}{\nu}$ in Figure XIV-14. It indicates that at low values of $\frac{u_* y}{\nu}$, $(\frac{u_* y}{\nu} < 5)$ the velocity follows the linear relationship

$$\frac{u}{u_*} = \frac{u_* y}{\nu}$$

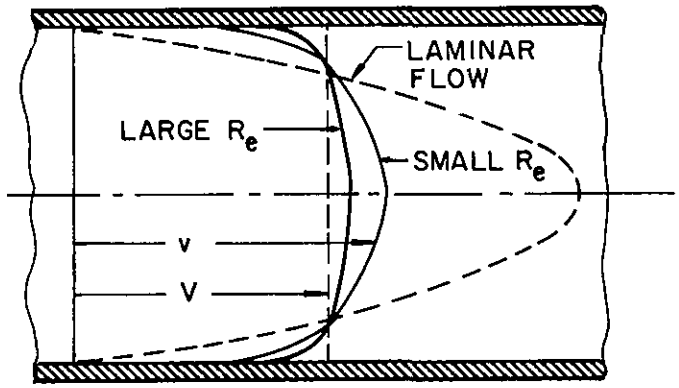

a) SMOOTH WALL

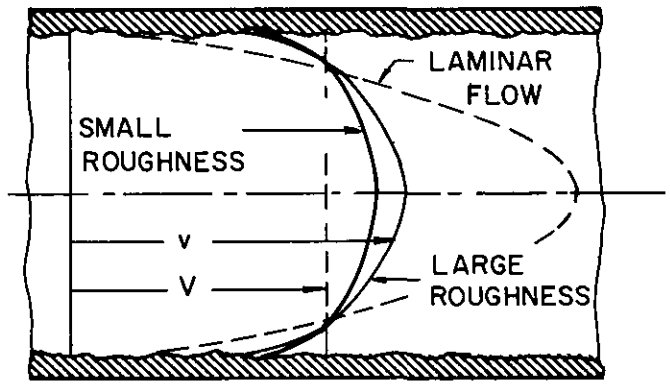

b) ROUGH WALL

FIGURE XIV-13
TYPICAL VELOCITY DISTRIBUTION IN PIPES

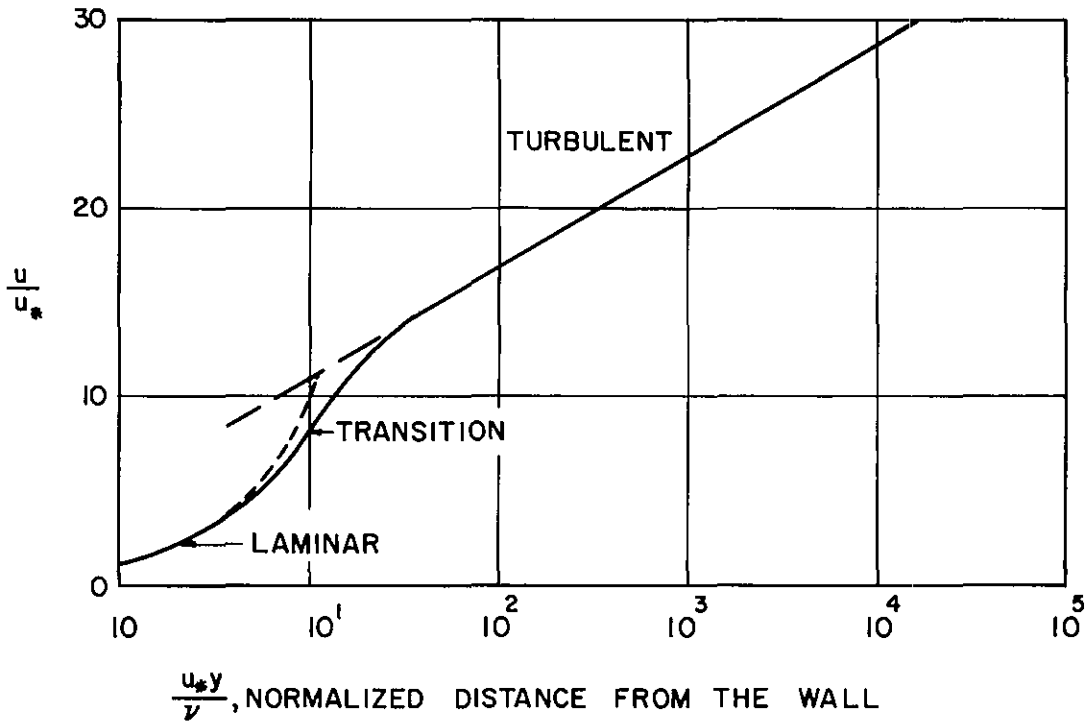

FIGURE XIV-14
UNIVERSAL VELOCITY DISTRIBUTION LAW FOR SMOOTH PIPES

For values of $\frac{u_* y}{\nu} > 30$ the experimental curve follows the logarithmic law which can be approximated by the equation

$$\frac{u}{u_*} = 5.75 \log_{10} \frac{y u_*}{\nu} + 5.5$$

However, in the range $\frac{u_* y}{\nu}$ between 5 to 30 where both turbulent and viscous effects are of equal importance the velocity profile deviates from both of the above equations. Mathematical analysis fails to give correct prediction. This region is usually called buffer region or transition region.

XIV-4.2.2 Resistance Law for Smooth Pipes

Usually the thickness of the laminar sublayer and the layer of transition is very small in comparison with the size of the pipe. Therefore, in computing the average velocity, one could just use the logarithmic velocity distribution without introducing any significant error. The average velocity may then be obtained by substituting

$$\frac{u}{u_*} = 5.75 \log_{10} \frac{y u_*}{\nu} + 5.5$$

into the following equation:

$$U = \frac{1}{r_o^2 \pi} \int_0^{r_o} 2\pi \, r u \, dr = \frac{2u_*}{r_o^2} \int_0^{r_o} r \left(5.75 \log_{10} \frac{u_*(r_o - r)}{\nu} + 5.5\right) dr$$

After integration, one obtains

$$\frac{U}{u_*} = 5.75 \log_{10} \frac{u_* r_o}{\nu} + 1.75$$

On the other hand, it has been seen that the Darcy-Weisbach equation gives the value of the head loss ΔH as function of the friction coefficient f and the average velocity U as follows:

$$\Delta H = f \frac{\ell}{D} \frac{U^2}{2g}$$

where ℓ and D are the length and diameter of the pipe respectively. Also, $\rho g \Delta H \frac{\pi D^2}{4}$ is the difference of pressure forces acting on two cross sections apart by a distance ℓ. This force is balanced by the shearing force $\tau_o \pi D \ell$. Equating these two forces yields:

$$\Delta H = \frac{4}{g} \frac{\tau_o}{\rho} \frac{\ell}{D}$$

Inserting $u_* = \sqrt{\tau_o / \rho}$ and eliminating ΔH by considering this above equality with the Darcy-Weisbach equation yields:

$$\frac{U}{u_*} = \sqrt{\frac{8}{f}} = 5.75 \log_{10} \frac{u_* r_o}{\nu} + 1.75$$

and since

$$\frac{u_* r_o}{\nu} = \frac{1}{2}\sqrt{\frac{f}{8}} \quad \frac{UD}{\nu}$$

The above equation can be further written

$$\frac{1}{\sqrt{f}} = 2.04 \log_{10} R \sqrt{f} - 0.91$$

where $R = \frac{UD}{\nu}$. By modifying the constant slightly to agree with the results obtained from experiments, that is to change the constants in the above equations 2.04 and 0.91 to 2.0 and 0.8 respectively, one has

$$\frac{1}{\sqrt{f}} = 2.0 \log_{10} R \sqrt{f} - 0.8$$

which is the Prandtl's universal law of friction for smooth pipes.

XIV-4.3 EFFECT OF ROUGHNESS

XIV-4.3.1 Velocity Distribution on the Turbulent Rough Wall

The effect of roughness element on the flow depends on the thickness of the laminar sublayer. If the laminar sublayer is so thick that it covers the roughness, then the roughness has no effect. The surface then can be considered to be hydrodynamically smooth. If the size of the roughness elements is much bigger in comparison to the

laminar sublayer, the effect of viscosity becomes small and no longer enters explicitly into the picture. The surface is then considered to be completely rough. In this case the shear stress depends only on the roughness, the specific density ρ, and the velocity u at some distance y from the wall. Some typical velocity profiles obtained in rough pipes are presented in Figure XIV-13b. Following the same procedure for the flow in smooth pipes, one could establish a dimensionless functional relationship for the closely packed uniform sand roughness elements in completely rough regime

$$\frac{u}{u_*} = f\left(\frac{y}{k_s}\right)$$

where k_s is the sand size. (If the sand is not closely packed or non-uniform, one should also take account for the concentration and distribution and shape of the roughness elements.) In the case that the wall is not completely rough, then an additional dimensionless parameter $\frac{k_s u_*}{\nu}$ should also be included. Therefore, the general function should read

$$\frac{u}{u_*} = f\left(\frac{y}{k_s}, \frac{k_s u_*}{\nu}\right)$$

This general functional relationship has been determined by experiments and can be approximated by the equation

$$\frac{u}{u_*} = 5.75 \log_{10} \frac{y}{k_s} + B$$

where B depends on the "shear Reynolds number," $\frac{k_s u_*}{\nu}$. The value of B obtained by experiments is shown in Figure XIV-15.

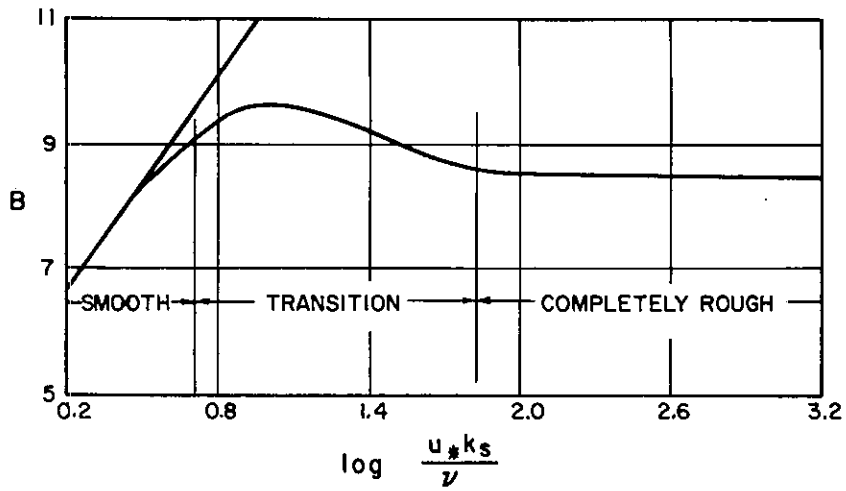

FIGURE XIV-15

ROUGHNESS FUNCTION B IN TERMS OF SHEAR REYNOLDS NUMBER $\frac{k_s u_*}{\nu}$

As indicated in this figure, the value of B characterizes three regimes:

a) Hydraulically smooth regime previously considered in Section XIV-4.2

$$0 \leq \frac{k_s u_*}{\nu} \leq 5$$

In this regime the size of roughness is so small that it is covered by laminar sublayer.

b) Transition regime:

$$5 \leq \frac{k_s u_*}{\nu} \leq 70$$

Some of the roughness elements extend outside the laminar sublayer and contribute some resistance through form drag.

c) Completely rough regime:

$$\frac{k_s u_*}{\nu} > 70$$

All the roughness elements are exposed outside the laminar sublayer or one may say that the laminar sublayer has been destroyed completely by the roughness elements. The turbulent action extends all the way to the rough wall. Further increase of shear and the Reynolds number does not bring any change of flow patterns. Therefore B remains independent of shear Reynolds number.

XIV-4.3.2 Resistance Formula for Rough Wall

The resistance coefficient in the completely rough regime can be evaluated the same way as in the case of smooth pipe. The final form of the resistance equation reads

$$\frac{1}{\sqrt{f}} = 2.0 \log_{10} \frac{r_o}{k_s} + 1.74$$

Experiments were performed first by Nikuradse. He used closely packed sand grain roughness elements and obtained the resistance diagram shown in Figure XIV-16.

The velocity distribution and resistance formula discussed are based on the closely packed sand grain roughness used by Nikuradse. In this case k_s is the actual sand size. However, if a different type of sand is used or sand particles are not packed closely, the resistance offered to the flow will be different. Therefore, sand size alone is not enough to describe the velocity distribution and resistance.

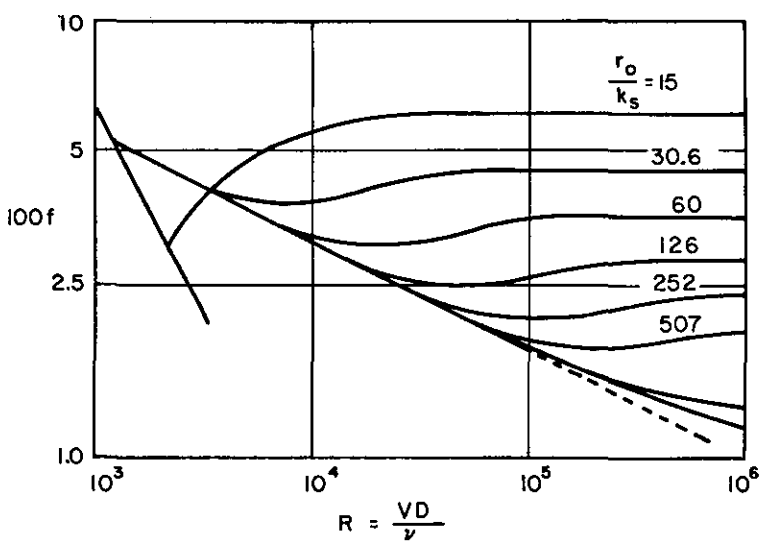

FIGURE XIV-16

RESISTANCE FORMULA FOR PIPES ROUGHED WITH NIKURADSE'S SAND ROUGHNESS

XIV-5 DRAG ON IMMERSED BODIES

XIV-5.1 DRAG ON A BODY IN STEADY FLOW

XIV-5.1.1 The Case of a Perfect Fluid: The Paradox of D'Alembert

It has been seen that the total force exerted by a current on a cylinder is zero. (See Section XI-4.3.1.2.) In the case of a perfect fluid this result is general, in such a way that the total force exerted on a body by a perfect fluid without circulation of velocity is always nil. It is the paradox of D' Alembert.

In the case where a circulation is introduced to the fluid (see Section XI-4.2 and in particular Section XI-4.2.6) a force perpendicular to the incident velocity is exerted on the body. It can be demonstrated that this force is proportional to the velocity of the fluid V and the strength of the circulation. It is this force that causes the lift of an aerofoil.

The problem now under study is that of a real fluid in which case a boundary layer develops along the body, and induces a drag. This drag is due to the shearing force acting on the body and to the wake. This leads us to discuss the problem of boundary layer separation.

XIV-5.1.2 Boundary Layer Separation

The flow field near a flat plate in parallel flow and at zero incidence is quite simple because the pressure in the entire flow field remains constant. In the case of flow about a blunt body such as a cylinder, the pressure along the surface of the body, which is impressed on the boundary from the external flow, is not constant. As shown in

Figure XIV-17 the fluid particles are accelerated from A to B and decelerated from B to C. Hence the pressure decreases from A to B and then increases from B to C, as can be seen by application of the Bernoulli equation. Since the fluid is viscous, a certain amount of kinetic energy is lost by the friction within the thin boundary layer as the fluid particles move along the boundary. The remaining energy may be too small to overcome the increasing pressure toward the point C. As a result of this, the fluid particles being influenced by the external pressure may move in the reverse direction and cause flow separation behind the body at point S. The flow field behind the separation is very irregular and is characterized by large turbulent eddies. This region is usually called turbulent wake although the wake may also be laminar when the Reynolds number is small (smaller than 40 in the case of a cylinder).

Because of the existence of the wake, the flow field changes radically as compared with that in frictionless flow. The main flow which separates from either side of the boundary does not meet right behind the body. It leaves the pressure within the wake to remain close to its value at the separation point, which is always less than the pressure at the forward stagnation point. Therefore, a large net force will act on the body resulting from the pressure difference. This force is called form drag.

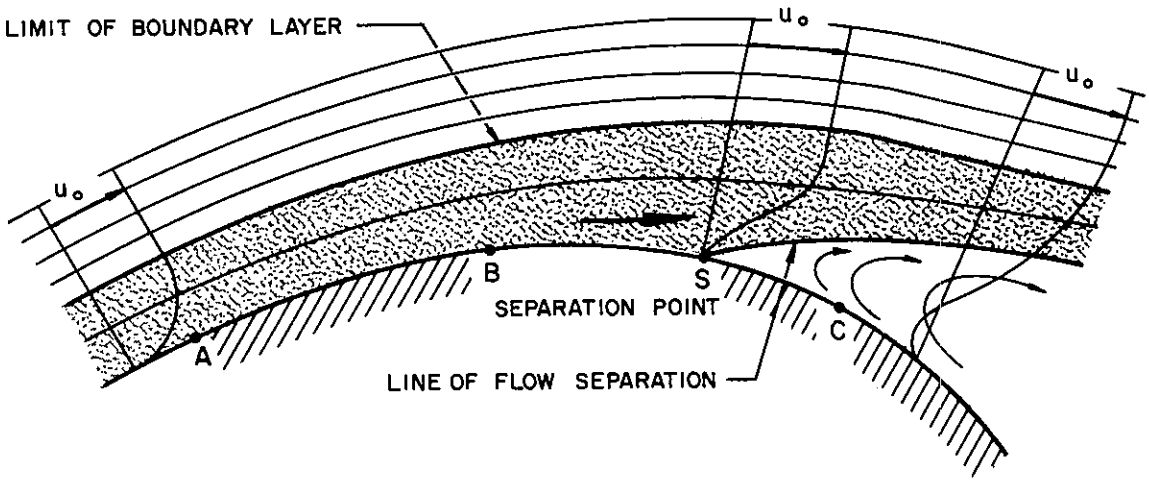

FIGURE XIV-17
BOUNDARY LAYER SEPARATION

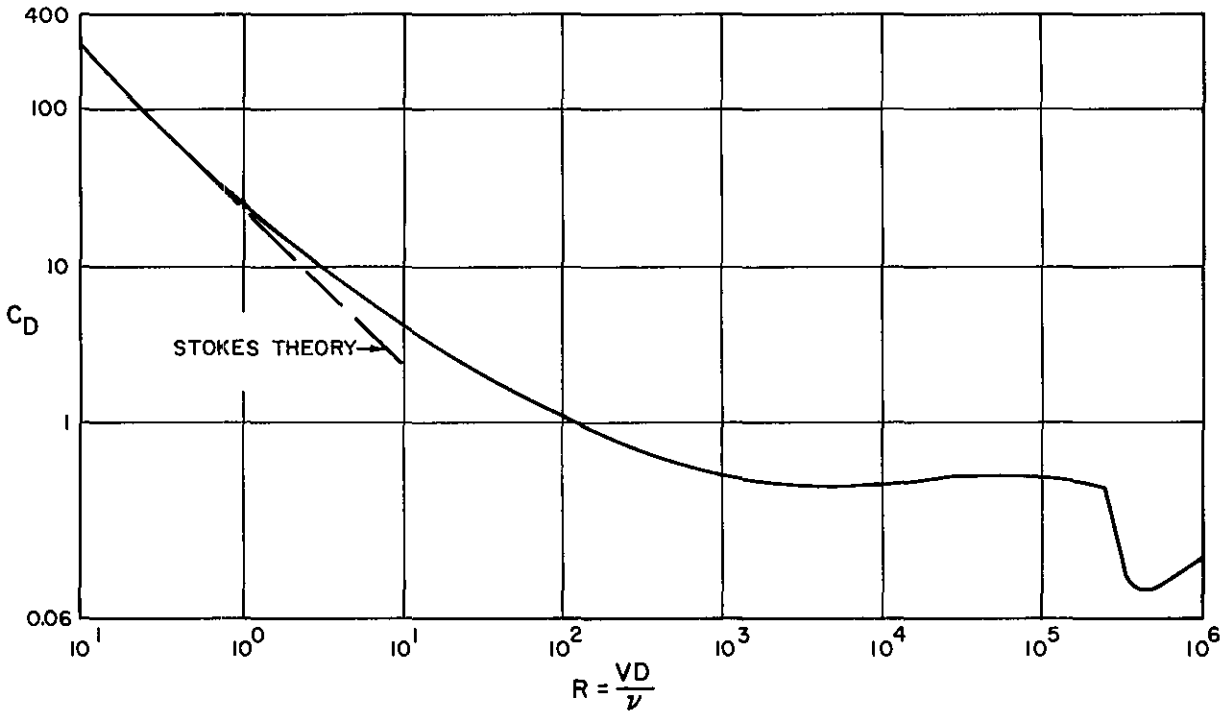

FIGURE XIV-18
DRAG COEFFICIENT FOR SPHERE

XIV-5.1.3 Drag Coefficient of a Sphere

In principle, the total drag exerted on a sphere moving with constant velocity in the infinite flow field is the sum of the friction drag (or shear drag) and the form drag. If the velocity is low enough ($R < 1$), the inertia terms in the Navier-Stokes equations may be neglected. The drag can be obtained analytically and is given by Stokes' law

$$F = 3\pi \rho \nu VD$$

where V is the relative velocity of the body with respect to the water and D the diameter of the sphere. The drag coefficient C_D which is defined from the equation:

$$F = C_D A \rho V^2/2$$

is then equal to 24/R, where A is the cross sectional area of the sphere, R is the Reynolds number VD/ν.

As the Reynolds number R increases, the flow separates from the surface of the sphere, beginning at the rear stagnation point, where the adverse pressure gradient is the largest. As the flow separates from the boundary, the form drag, which is a function of the area of separation and the square of velocity, becomes important. The drag coefficient C_D will deviate from the line $C_D = 24/R$, and start to level off. Figure XIV-18 indicates the variation of the drag coefficient C_D with Reynolds number R.

As the Reynolds number reaches $2 \cdot 10^3$, the drag coefficient becomes almost constant. However, in the range of Reynolds number $2 \cdot 10^5$ to $3 \cdot 10^5$, the drag coefficient is suddenly reduced. The reason for this lies in the transition of boundary layer from laminar to turbulent. This transition brings a violent mixing in the boundary layer. As a result the fluid particles near the boundary gain additional kinetic energy which enables them to better withstand the adverse pressure gradient and move the separation point somewhat downstream as illustrated in Figure XIV-19. This results in a sudden decreasing of the drag coefficient near the Reynolds number 3×10^5 as shown in Figure XIV-18. Since the transition that occurs depends on the roughness of the sphere, and also slightly on the turbulence level in the free stream, the drag coefficient near this critical region is not a unique function of Reynolds number.

XIV-5.1.4 Drag on a Cylinder and the Kármán Vortex Street

As shown in Figure XIV-20, the relationship between drag coefficient and the Reynolds number for a circular cylinder with axis normal to the direction of motion, in general, is similar to that for a sphere. However, rather peculiar phenomena which are not ordinarily found in the flow around a sphere can be observed in flow around a cylinder. In the range of Reynolds number between 40 and 5,000, one could see a regular pattern of vortices which move alternately clockwise and counterclockwise downstream as shown in Figure XIV-21. This is known as the Kármán vortex street. The vortex

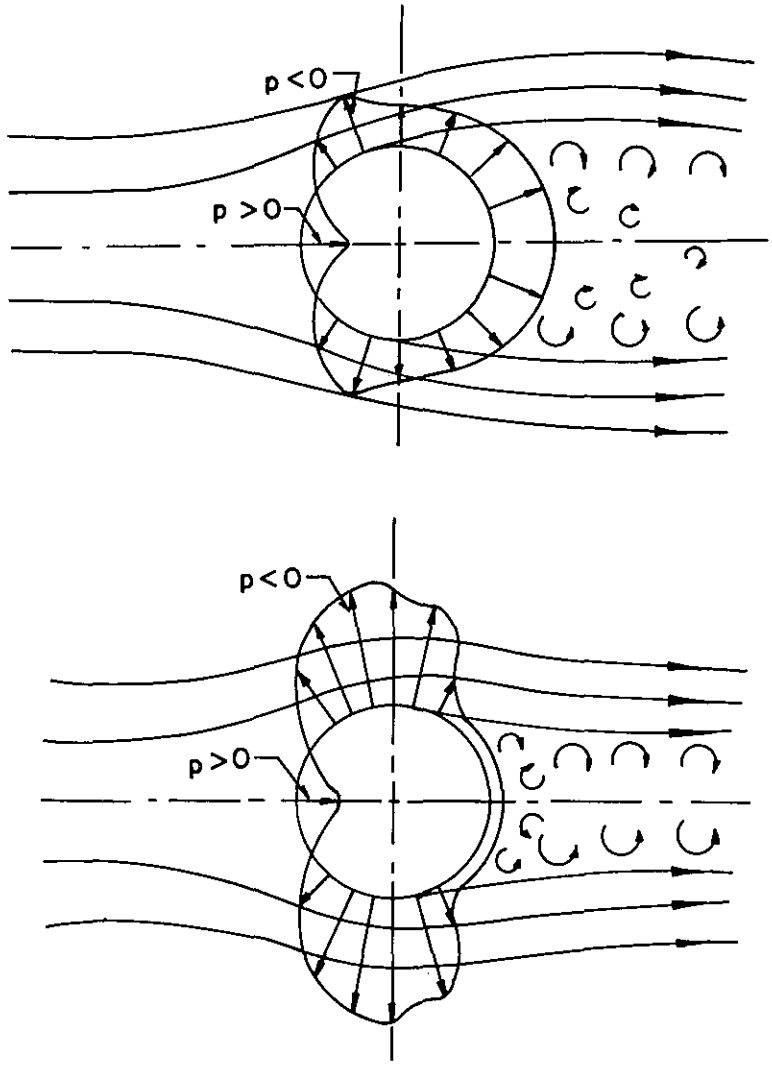

FIGURE XIV-19
CHANGING LOCATION OF SEPARATION AND PRESSURE DISTRIBUTION AS A RESULT OF BOUNDARY LAYER TRANSITION

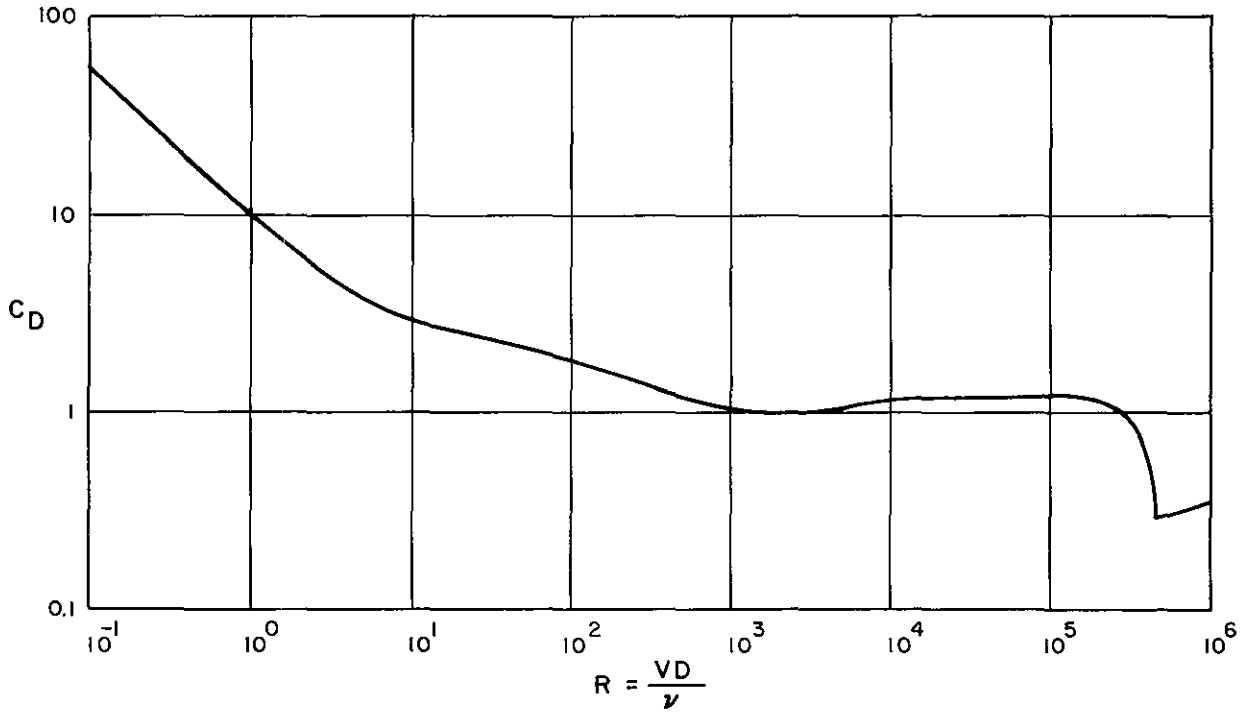

FIGURE XIV-20
DRAG COEFFICIENT FOR CIRCULAR CYLINDER

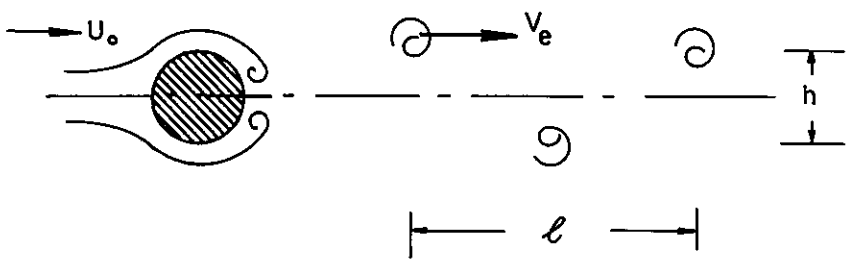

FIGURE XIV- 21
KÁRMÁN VORTEX STREET

street moves with a velocity V_e which is somewhat smaller than the free stream velocity U_o. Von Kármán found that the vortex street is unstable except at the spacing $h/l = 0.281$ and that the drag experienced by the cylinder depends on the width of the vortices h and on the velocity ratio V_e/U_o:

$$F = \rho U_o^2 h \left[2.83 \frac{V_e}{U_o} - 1.12 \left(\frac{V_e}{U_o} \right)^2 \right]$$

Since the vortex developed behind the cylinder is unsymmetrical, a time-dependent circulation of velocity is induced around the cylinder. The cylinder will experience a side push which continually reverses its direction. Therefore the cylinder may tend to oscillate from one side to the other, particularly if its natural frequency of oscillation is in resonance with the frequency of the vortex shedding.

The shedding frequencies k in the Karman vortex street behind a circular cylinder have been measured. Those measurements indicate that the dimensionless frequency known at the Strouhal number

$$S = \frac{kD}{\nu}$$

depends uniquely on the Reynolds number. An experimental curve which can be used to determine the frequency of the vortex shedding is given in Figure XIV-22. From this curve, one could determine the shedding frequency which is useful information in practical design.

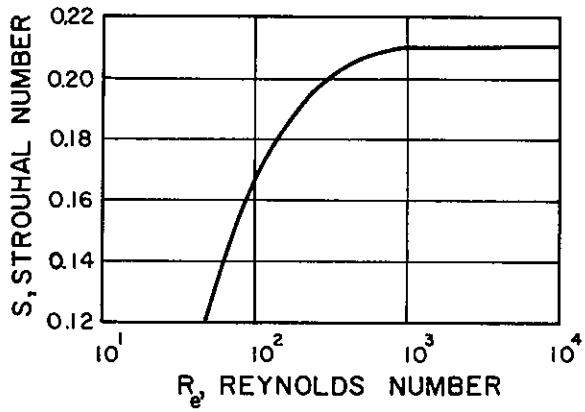

FIGURE XIV-22

THE RELATIONSHIP BETWEEN THE STROUHAL NUMBER AND THE REYNOLDS NUMBER

XIV-5.2 DRAG DUE TO UNSTEADY MOTION: THE ADDED MASS CONCEPT

XIV-5.2.1 The concept of added mass, or virtual mass, or induced mass, is of particular importance in the study of the forces acting on a body accelerating or decelerating in still water, or on a fixed body subjected to an unsteady current.

It is recalled that under steady state conditions the total force acting on a fixed body by a current without circulation is nil in the case of a perfect fluid. It is the paradox of D'Alembert. In the case of a real fluid, it has been seen that the force is a complex function of the Reynolds number.

Under unsteady conditions, another force has to be added, whether the fluid is perfect or real. The value of this force is now going to be analyzed.

XIV-5.2.2 When a body of mass M moves in still water at a speed U, it has a kinetic energy $(1/2)\,MU^2$. This body automatically induces a fluid motion around it which tends to zero when the distance from the body tends to infinity. The exact law of decay depends upon the shape of the body. However, far from the body it can be said that the fluid particle velocity $V(x, y, z, t)$ decreases as $1/R^3$ in the case of a three-dimensional flow and $1/R^2$ in the case of a two-dimensional flow; R being the distance of the considered fluid particle from the center of the body.

The total kinetic energy of the fluid surrounding the body is then

$$\iiint_{\lim}^{\infty} \frac{1}{2}\,\rho V^2(x, y, z, t)\, d\sigma$$

where lim is the limit of the body and $d\sigma$ an elementary volume (or area in the case of a two-dimensional motion).

The total kinetic energy of the system can then be written:

$$W = \frac{1}{2}\,U^2 \left[M + \rho \iiint_{\lim}^{\infty} \left(\frac{V}{U}\right)^2 d\sigma \right]$$

The quantity

$$M' = \rho \iiint_{\lim}^{\infty} \left(\frac{V}{U}\right)^2 d\sigma$$

is the added mass. It is the mass of fluid which, moving at speed U, will have the same kinetic energy as the total mass of fluid. W is the work which is required to give the body velocity U, or it is the work which would be required to stop it. It is seen that this work also includes the work required to move the fluid around it: $(1/2)\, M'U^2$. Once this work is produced, the body will continue to travel in a perfect fluid at a constant velocity U.

XIV-5.2.3 It is pointed out that since V decreases with R^{-3} (or R^{-2} in the two dimensional case), $(V/U)^2$ varies with distance as R^{-6} (or R^{-4}) while the integral of $d\sigma$ varies as R^3 (or R^2). Consequently, the integral for M' has a finite value.

It is seen also that in the general case M' is a function of the absolute value of U and consequently of the Reynolds number UD/ν and other empirical parameters characterizing the flow (such as UT/D for periodic motion where D is a typical dimension of the body). Consequently, M' will also be in general a function of time. However, in the case of a perfect fluid, $V(x, y, z, t)/U$ is independent of U but depends upon the flow pattern only. If one refers V to a coordinate system moving at velocity U this ratio is also independent of time. Hence the integral of the coefficient $V(x, y, z,)\ /U$ is

independent of the value of U and the time as well. In a word, M' is a constant associated to the body and the specific mass of the fluid only.

XIV-5.2.4 Let us now consider the total force to move the body. It is equal to the sum of the inertia of this body itself and the inertia of the fluid surrounding it, i.e.,

$$\vec{F} = M \frac{d\vec{U}}{dt} + \rho \iiint_{\lim}^{\infty} \frac{d\vec{V}}{dt} d\sigma$$

which can still be written as

$$\vec{F} = (M + M') \frac{d\vec{U}}{dt}$$

where

$$M' = \frac{\rho \frac{d}{dt} \iiint_{\lim}^{\infty} \vec{V} \, d\sigma}{\frac{d\vec{U}}{dt}}$$

It is not evident a priori that the two definitions for M' are identical. As a matter of fact the integral $\iiint V \, d\sigma$ may diverge as the distance from the body tends to infinity. Hence, in the case of moving body the force $F' = M' \, dU/dt$ should be determined from the force exerted by the fluid on the body or vice versa, i.e.,

$$F' = \iint^{S} p \cos \theta \, ds$$

where p is the pressure around the body, cos θ is the angle of the perpendicular to ds with the main direction of the motion and s the area of the body (see Figure XIV-23). Given V (or φ), p can be determined by application of the Bernouilli equation. In general, the integral of $\rho\ V^2/2$ being zero (paradox of D'Alembert), the integral of $\rho\ \partial\varphi/\partial t$ only is significant, so that finally:

$$M' = \frac{-\iint \rho \frac{\partial \varphi}{\partial t} \cos\theta\, ds}{\frac{dU}{dt}}$$

Of course, the equality force-momentum can also be obtained by differentiating the equality work-energy as follows:

$$\frac{d}{dt}(W) = \frac{d}{dt}\left[\frac{1}{2}(M + M')\,U^2\right]$$

gives

$$F\frac{dL}{dt} = U\,(M + M')\frac{dU}{dt}$$

Since dL/dt = U, the equality force-momentum is obtained. Still, this operation is done by assuming M' constant and dF/dt = 0. Actually, a more rigorous demonstration will not require this limitation.

As a conclusion, for all practical purposes the added mass is determined by calculating the integral

$$M' = \rho \iiint \left(\frac{V}{U}\right)^2 d\sigma$$

or in the case of an irrotational flow

$$M' = - \frac{\iint \rho \frac{\partial \varphi}{\partial t} \cos \theta \, ds}{\frac{dU}{dt}}$$

Then this value of M' will be used for determining the force

$$M' \frac{dU}{dt}$$

The shortcomings of these simple demonstrations will not be discussed in this book.

XIV-5.2.5 The case of a moving circular cylinder of radius R is given here as an example. The velocity potential for a cylinder moving through a fluid at rest is given by superimposing upon the steady state pattern of a flow around a cylinder, a uniform velocity U (see Section XI-4.3.1.2), i.e.,

$$\varphi = - U \left(r + \frac{R^2}{r}\right) \cos \theta + U r \cos \theta$$

It is seen that this operation nullifies the uniform flow component and the potential function is that of a doublet:

$$\varphi = - U \frac{R^2}{r} \cos \theta$$

The fluid velocity at any point has a magnitude given by

$$V^2 = \left[\left(\frac{1}{r}\frac{\partial\varphi}{\partial\theta}\right)^2 + \left(\frac{\partial\varphi}{\partial r}\right)^2\right]$$

which gives:

$$V(r, \theta, t) = \frac{R^2}{r^2} U(t)$$

where U(t) is the velocity of the body. The total kinetic energy of the fluid per unit length of the cylinder is then successively

$$T = \int_0^{2\pi} \int_{r=R}^{\infty} \rho \frac{1}{2} \frac{R^4 U^2}{r^4} r \, dr \, d\theta$$

$$= \rho \pi R^4 U^2 \int_{r=R}^{\infty} \frac{dr}{r^3}$$

$$= \frac{1}{2} \rho \pi R^2 U^2$$

It is seen that the added mass is $M' = \rho \pi R^2$, i.e., the mass of a cylinder of radius R having the same density as the fluid. It is seen that the total force to move the body is then,

$$F = (M + M') \frac{dU}{dt}$$

i.e.,

$$F = (\rho_b + \rho)\, \pi\, R^2 \frac{dU}{dt}$$

where ρ_b is the density of the body.

It can be verified that $F' = M' \frac{dU}{dt}$ is the total force exerted by the fluid on the body as the sum of all the pressure forces in the direction of the motion:

$$F' = \int_0^{2\pi} p \cos\theta\, R\, d\theta$$

The pressure distribution around a moving cylinder in the case of an unsteady motion is given by

$$-\frac{p}{\rho} = \frac{\partial\varphi}{\partial t} + \frac{1}{2} V^2 + f(t)$$

i.e.,

$$\frac{p}{\rho} = R \frac{dU}{dt} \cos\theta + \frac{1}{2} U^2 \left[1 - 4 \sin^2\theta\right]$$

Since the integral of the quadratic term is zero, the total force acting on the cylinder is

$$F' = \int_0^{2\pi} \rho R^2 \frac{dU}{dt} \cos^2\theta\, d\theta$$

i.e.,

$$M' = \rho \pi R^2$$

XIV-5.2.6 Let us now consider the case of a fixed body subjected to an unsteady current. The total force exerted by water on the body is still

$$F = \iint^{S} p \cos \theta \, ds$$

which in the case of an irrotational motion without circulation of velocity is identical to

$$- \iint \rho \frac{\partial \varphi}{\partial t} \cos \theta \, ds$$

This integral is twice the value of the same integral in the case of a moving body in a still fluid, and consequently

$$F = 2 M' \frac{dU}{dT}$$

It is interesting to mention that in the first case of a moving body in still water the same force is found provided $M = M'$, i.e., the body has the same density as the fluid.

XIV-5.2.7 The case of a fixed circular cylinder subjected to an unsteady fluid flow is given here as an example.

The potential function for the motion is then

$$\varphi = -U(t)\left[r + \frac{R^2}{r}\right]\cos\theta$$

and

$$\rho\frac{\partial\varphi}{\partial t}\bigg|_{r=R} = -\rho 2R\frac{dU}{dt}\cos\theta$$

It is seen that the pressure component due to local inertia is in this case twice the value of the pressure component in the case of a moving cylinder.

Inserting this value in the previous integral yields:

$$F = 2\rho\pi R^2\frac{dU}{dT} = 2M'\frac{dU}{dT}$$

XIV-5.2.8 In the case of a real fluid, this inertial force still exists but due to viscosity, separation, and wake, a superimposed quadratic force also exists. The following empirical formula is often proposed:

$$F = \rho C_D A U^2 + \rho C_M \text{ Vol.}\frac{dU}{dt}$$

where A is the cross section of the body perpendicular to the flow and Vol. is the volume of the body. (A = 2R in the case of a cylinder) C_D is the drag coefficient, and C_M the inertial coefficient. It is seen by comparison with the previous result that $C_M = 2$ in the case of a cylinder. As a matter of fact, both C_M and C_D are not constants but complex unknown functions of the reduced frequency $D/\nu T$, the Reynolds number UD/ν, and are time dependent.

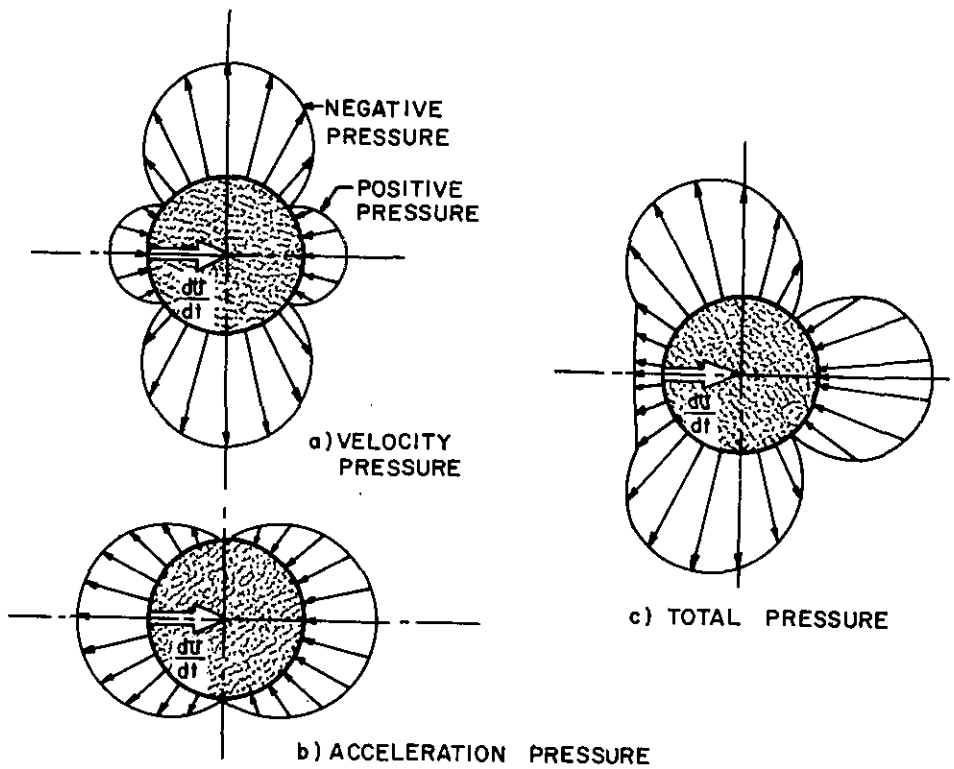

FIGURE XIV-23
AN EXAMPLE OF DISTRIBUTION OF PRESSURE FORCE ON A MOVING BODY IN STILL WATER

XIV-1 The dissipation energy thickness δ^{**} of a boundary layer is defined by the equation:

$$\rho U_o^3 \delta^{**} = \rho \int_o^\infty u \left[u_o^2 - u^2\right] dy$$

where the right hand term is the flux of dissipated energy by friction. Calculate the value of δ^*, θ, and δ^{**} as functions of δ in the cases where

1) $u = U_o \frac{y}{\delta}$ for $y < \delta$ and $u = U_o$ for $y \geq \delta$

2) $u = U_o \left[\frac{y}{\delta} + \left(\frac{y}{\delta}\right)^2\right]$ for $y < \delta$ and $u = U_o$ for $y \geq \delta$

3) $u = U_o \tanh \frac{y}{\delta}$

<u>Answer</u>:

$$\delta^* = \frac{\delta}{2}, \ \frac{\delta}{3}, \ 2\delta - \delta \ln (e^2 + 1) + \ln^2 ;$$

$$\theta = \frac{\delta}{6}, \ \frac{2\delta}{15}, \ \delta \left[\ln \cosh 1 + \tanh 1 - 1\right] ;$$

$$\delta^{**} = \frac{\delta}{4}, \ \frac{22}{105}\delta, \ \frac{\delta}{2}\left[\left(\frac{2}{e - e^{-1}}\right)^2 - 1\right]$$

XIV-2 Obtain the transverse velocity component v for the laminar boundary layer along a plate.

Answer:

$$\text{Since } \psi = \sqrt{\nu_x U_o}\, f(\eta), \quad \eta = y\sqrt{\frac{U_o}{\nu_x}}$$

$$v = -\frac{\partial \psi}{\partial x} = \frac{1}{2}\sqrt{\frac{\nu U_o}{x}}\left[\eta \frac{\partial f(\eta)}{\partial \eta} - f\right]$$

XIV-3 Determine the coefficients A_n of the Blasius Theory up to A_{11} as a function of A_2. Demonstrate that only A_{3n+2} are different from zero and establish a reference formula for A_{3n+2} as a function of A_2. Present the expression of $f(\eta)$ as a power series as a function of A_2 and determine the value of A_2 (it is found that $A_2 = 0.332$). Determine the value of $f(\eta)$, $f'(\eta)$, $f''(\eta)$ at $y = 0$.

Answer:

$$A_o = 0, \quad A_1 = 0, \quad A_3 = 0, \quad A_4 = 0, \quad A_5 = -\frac{1}{2} A_2^2,$$

$$A_6 = 0, \quad A_7 = 0, \quad A_q = -\frac{11}{4} A_2^3, \quad A_9 = 0, \quad A_{10} = 0,$$

$$A_{11} = -\frac{1}{8}\frac{375}{11!} A_2^4, \quad A_{3n+2} = \left(-\frac{1}{2}\right)^n \frac{A_2^{n+1} C_n}{(3n+2)!}$$

XIV-4 The thickness of the laminar boundary layer on a semi-flat plate can be evaulated through the von Karman momentum integral formula

by assuming a proper velocity profile. If the velocity profile is assumed to be a polynomial

$$u = a_o + a_1 y + a_2 y^2 + a_3 y^3 + a_4 y^4$$

1) Give the proper boundary conditions and use these boundary conditions to determine the five constants.
2) Calculate the shear stress along the plate.
3) Obtain the thickness of boundary layer by use of von Kármán's momentum integral formula.

<u>Answer:</u>

$$\begin{cases} y = 0, \quad u = 0, \quad \dfrac{\partial^2 u}{\partial y^2} = 0 \\ y = 5, \quad u = U_o, \quad \dfrac{\partial u}{\partial y} = 0, \quad \dfrac{\partial^2 u}{\partial y^2} = 0 \end{cases}$$

$$\begin{cases} a_o = 0, \quad a_2 = 0, \quad a_1 = 2\dfrac{U_o}{\delta}, \\ a_3 = -\dfrac{2U_o}{\delta^3}, \quad a_4 = \dfrac{U_o}{\delta^4} \end{cases}$$

$$\left\{ \tau_o = \rho \nu \left.\frac{\partial u}{\partial y}\right|_{y=0} = \frac{2\rho\nu U_o}{\delta} \right.$$

XIV-5 Consider the steady boundary layer on a convergent channel with flat walls. The boundary layer equations along the wall parallel to

the x-axis are

$$u \frac{\partial u}{\partial x} + v \frac{\partial u}{\partial y} = - \frac{1}{\rho} \frac{\partial p}{\partial x} + v \frac{\partial^2 u}{\partial y^2}$$

$$\frac{\partial p}{\partial y} = 0 \qquad \frac{\partial u}{\partial x} + \frac{\partial v}{\partial y} = 0$$

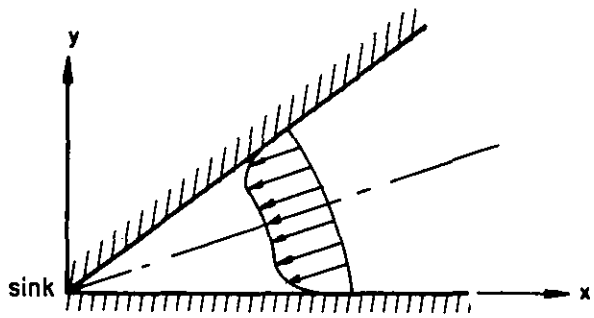

The free stream velocity is given in the form

$$u(x) = - \frac{u_o}{x}$$

Introducing the similarity transformation

$$\eta = \frac{y}{x} \sqrt{\frac{u_o}{\nu}}$$

as well as the stream function

$$\psi \ (x, y) = - \sqrt{\nu u_o} \ f(\eta)$$

1) Find the ordinary differential equation for the stream function and the boundary conditions.

2) Obtain the velocity distribution.

Answer:

$$f''' - f'^2 + 1 = 0$$

Multiplying this equation by f'' and integrating,

$$\frac{df'}{d\eta} = (f' - 1)\sqrt{\frac{2}{3}(f' + 2)}$$

i.e.,

$$\eta + \sqrt{2}\left[\tanh^{-1}\frac{\sqrt{2 + f'}}{\sqrt{3}} - \tanh^{-1}\sqrt{\frac{2}{3}}\right]$$

Finally

$$f' = \frac{u}{U} = 3\tanh^2\left(\frac{\eta}{\sqrt{2}} + 1.146\right) - 2$$

XIV-6 Establish the momentum integral equation for unsteady boundary layer.

Answer:

From the continuity and momentum equations, one has:

$$\frac{\partial u}{\partial t} + \frac{\partial u^2}{\partial x} + \frac{\partial uv}{\partial y} = -\frac{1}{\rho}\frac{\partial p}{\partial x} + \nu\frac{\partial^2 u}{\partial y^2}$$

Outside the boundary $u \rightarrow U$ and $\frac{\partial^2 U}{\partial y^2} \rightarrow 0$; so

$$\int_0^\delta \left(\frac{\partial u}{\partial t} + \frac{\partial u^2}{\partial x} + \frac{\partial uv}{\partial y}\right)dy = \int_0^\delta \left(\frac{\partial U}{\partial t} + U\frac{\partial U}{\partial x} + \nu\frac{\partial^2 u}{\partial y^2}\right)dy$$

Inserting $v = -\int_o^y \frac{\partial u}{\partial x} dy$, and rearranging

$$\frac{\partial}{\partial t}\int_o^\delta (U - u)\, dy + \frac{\partial}{\partial x}\int_o^\delta [u(U - u)\, dy] + \frac{\partial U}{\partial x}\int_o^\delta (U - u)\, dy = \frac{\tau_o}{\rho}$$

Finally

$$\frac{\tau_o}{\rho} = \frac{\partial}{\partial t}(U\delta^*) + \frac{\partial}{\partial x}(U^2\theta) + \delta^* U \frac{\partial U}{\partial x}$$

XIV-7 Determine the frictional force on an oscillating plane covered by a layer of fluid of thickness h. The frequency of oscillation is k and the fluid has kinematic viscosity ν.

Answer:

$$\frac{\partial u}{\partial t} = \nu \frac{\partial^2 u}{\partial y^2}, \qquad u = U_o \frac{\cos k(h - y)}{\cos kh} \cos kt$$

$$F = \mu \left.\frac{\partial u}{\partial y}\right|_{x=0} = \mu k U_o \tanh kh \cos kt$$

XIV-8 A fixed amount of discharge Q flows uniformly down a semi-infinite plate started at $x = 0$. The fluid has viscosity μ and density ρ and it accelerates with the gravitational acceleration g as shown on the following figure. The free surface is assumed to be of constant pressure.

The fluid in contact with the plate forms a boundary layer. The thickness of the boundary layer increases until it reaches the free surface as shown on the following figure.

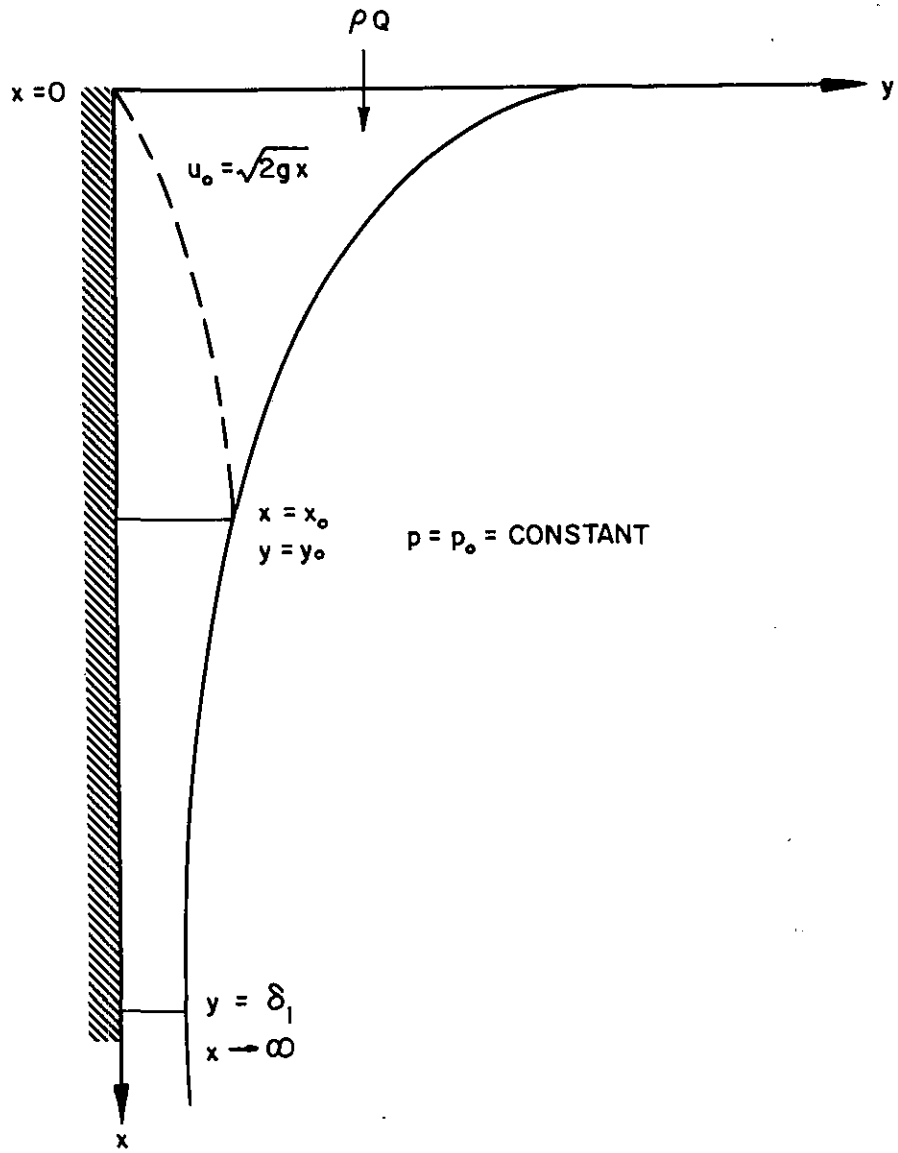

The flow will continue to accelerate and the fluid layer will become thinner until it reaches an asymptotic value.

1) Derive the momentum integral equation before the boundary

layer reaches the free surface.

2) Assume a parabolic velocity profile

$$\frac{u}{u_o} = a_o + a_1 \left(\frac{y}{\delta}\right) + a_2 \left(\frac{y}{\delta}\right)^2$$

Determine the constants a_o, a_1, a_2 by use of appropriate boundary conditions. Substitute the determined velocity profile into the momentum integral equation and derive a differential equation for $\delta(x)$.

3) Try a solution of the form $\delta = \beta x^n$. Determine the values of β and n from the integral equation.

4) Determine the distance x_o at which the boundary layer reaches the free stream.

5) Determine the thickness of the boundary layer δ_o at the location where the boundary layer reaches the free stream.

6) Derive the momentum integral equation for the flow regime $x > x_o$.

7) Using the velocity profile derived in question (2), derive the differential equation of $\delta(x)$ for $x > x_o$.

8) Obtain the relationship between the distance x and the layer thickness.

9) Obtain the layer thickness δ_3 when x approaches infinity.

<u>Answer:</u>

1) $$\frac{d}{dx}\int_o^\delta u^2\, dy - U_o \frac{d}{dx}\int_o^\delta u\, dy = -\nu \frac{\partial u(o)}{\partial y} + g\delta$$

2) $a_o = 0, \quad a_1 = 2, \quad a_2 = -1$

$$\frac{8}{15}\frac{d}{dx}\left(2gx\delta\right) - \frac{2}{3}2g\sqrt{x}\frac{d}{dx}\left(\sqrt{x}\,\delta\right) = -\frac{2\nu}{\delta}\sqrt{2gx} + g\delta$$

$$(U_o = \sqrt{2gx})$$

3) $\beta = 3\sqrt{2}\left(\frac{\nu}{\sqrt{g}}\right)^{1/2}$

4) $x_o = \left(\frac{3Q}{2\sqrt{2g}\,\beta}\right)^{4/3}$

5) $y_o = \beta\left(\frac{3Q}{2\sqrt{2g}\,\beta}\right)^{1/3}$

6) $\frac{d}{dx}\int_o^\delta u^2\,dy = -\nu\frac{\partial u(o)}{\partial y} + g\delta$

7) $\frac{d\delta}{dx} = \frac{5g}{6Q^2}\left(\frac{3\nu Q}{g} - \delta^3\right)$

8) $$\frac{5g}{6Q^2}(x - x_o) = \frac{1}{6\delta^{*2}}\ln\left[\left(\frac{\delta^* - \delta_o}{\delta^* - \delta}\right)^2\left(\frac{\delta^{*2} + \delta^*\delta + \delta^2}{\delta^{*2} + \delta^*\delta_o + \delta_o^2}\right)\right]$$

$$+ \frac{1}{\sqrt{3}\,\delta^{*2}}\left[\tan^{-1}\frac{2\delta + \delta^*}{\delta^*\sqrt{3}} - \tan^{-1}\frac{2\delta_o + \delta^*}{\delta^*\sqrt{3}}\right]$$

where $\delta^* = \left(\frac{3\nu Q}{g}\right)^{1/3}$

9) $\delta_3 = \left(\frac{3\nu Q}{g}\right)^{1/3}$

XIV-9 Derive the resistance equation for turbulent flow in rough pipes

$$\frac{1}{\sqrt{f}} = 2 \log_{10} \frac{r_o}{k_s} + 1.74$$

XIV-10 The potential function for a two-dimensional flow around a cylinder of radius R is

$$\phi = U \left(r + \frac{R^2}{r} \right) \cos \theta$$

where U is the velocity at infinity. Give the pressure distribution around the cylinder in the case where

1) $U = \text{constant} = U_o$

2) $U = U_o \sin kt$

Determine the total force acting on a cylinder by integration of the pressure.

XIV-11 Calculate the added mass for a sphere, taking into account the fact that the velocity potential for a sphere of radius R moving at velocity U in a special coordinate system (r, θ, ψ) in a still fluid is:

$$\phi = \frac{UR^3}{2r^2} \cos\theta$$

Answer:

$$M' = \rho \int_0^{2\pi} \int_0^{\pi} \int_R^{\infty} \frac{v_r^2 + v_\theta^2}{U^2} r^2 \sin\theta \, dr \, d\theta \, d\psi = \frac{2}{3} \rho \pi R^3$$

XIV-12 The horizontal velocity component due to a linear periodic gravity wave in deep water is

$$u = H \frac{\pi}{T} e^{\frac{2\pi}{L} z} \cos(kt - mx)$$

Calculate the maximum total force exerted on a vertical cylinder of five feet diameter by a wave $H = 20$ feet, $T = 10$ seconds. The drag coefficient $C_D = 1$, and the inertial coefficient $C_M = 2$, $k = \frac{2\pi}{T}$, $m = \frac{2\pi}{L}$ and $L = \frac{gT^2}{2\pi}$.

Answer:

The drag force is maximum under the crest. The inertial force is maximum when the free surface elevation is at the still water level. The maximum total force at a given level occurs before the crest reaches the pile at a time which varies slightly with the vertical coordinates z. The maximum total force on the pile is obtained by numerical integration.

☆GPO 852-382