[redacted]

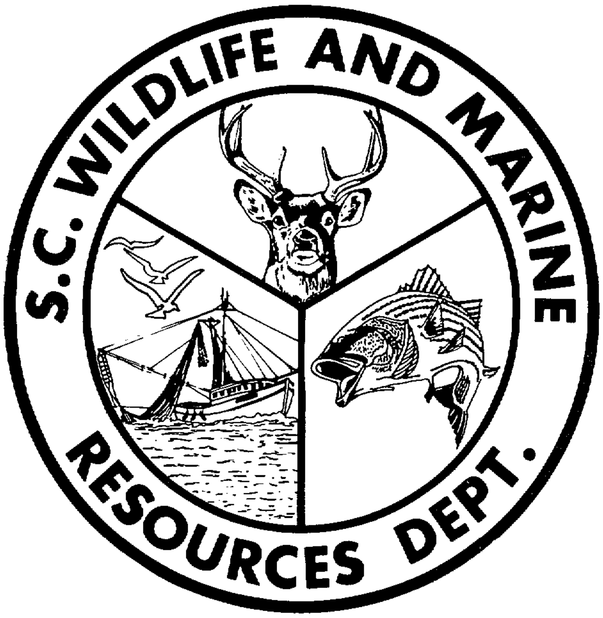

SOUTH CAROLINA MARINE RESOURCES CENTER

# IMPACTS OF A MECHANICAL HARVESTER ON INTERTIDAL OYSTER COMMUNITIES IN SOUTH CAROLINA

FINAL REPORT
Coastal Energy Impact Program
Contract #CEIP-83-06
Project #30357

1 January 1985

Prepared by:

John J. Manzi[1]
Victor G. Burrell, Jr.[1]
Kathryn J. Klemanowicz[2]
Nancy H. Hadley[1]
John A. Collier[3]

[1]Marine Resources Research Institute
P.O. Box 12559
Charleston, SC 29412

[2]Grice Marine Biological Laboratory
College of Charleston
Charleston, SC 29412

[3]Agriculture Engineering Dept.
Clemson University
Clemson, SC 29631

# TABLE OF CONTENTS

## LIST OF TABLES

## LIST OF FIGURES

# ABSTRACT

An intertidal oyster reef in South Carolina was subjected to mechanical harvesting to assess the effects of such activities on oyster reef communities. Oyster population parameters in the high and low intertidal strata of the experimental reef and an adjacent control site were compared before and immediately after mechanical harvesting and then monitored over an annual cycle to determine long-term effects. Macrofaunal invertebrates associated with the oyster beds were studied over the same time period. Subsequent to mechanical harvesting, oyster biomass in the high intertidal portion of the harvested reef remained low relative to the control site, but biomass in the low intertidal area of the reef increased. This was attributed to displacement of oysters from the upper reef to the low intertidal area and to increased mortality in the upper portion of the reef as a result of physical disturbance. Total spatfall was lower on the harvested reef than on the control as a result of reduced space (cultch) available for oyster set. Encrusting and non-motile invertebrates appeared to be little affected by the harvesting activities. The number of motile or non-colonial invertebrate species present on the reef was not affected by harvesting, but the species density was reduced in the high intertidal stratum. Species density was correlated with oyster biomass; thus, reduced density in the high intertidal zone reflected the lower oyster biomass after harvesting. Community diversity was also affected, with the high intertidal zone showing increased diversity and decreased dominance, while the low intertidal area had decreased diversity and increased dominance. These changes were attributed to migration of some species from the high intertidal portion of the reef to the low intertidal area. This could be due to loss of habitat in the high intertidal zone or be an opportunistic response to translocation of damaged oysters to the low intertidal area. The effects of the mechanical harvester appeared to be primarily related to reduced biomass in the high intertidal area of the oyster bed. This resulted in increased mortality of remaining oysters, decreased habitat for associated invertebrates, and lower spat recruitment. Returning oyster shell to the reef after harvesting would largely ameliorate these effects.

# INTRODUCTION

Populations of the American or eastern oyster, *Crassostrea virginica* (Gmelin), in the coastal areas of the South Atlantic Bight, generally occupy the intertidal zone where they form intertidal oyster rocks, grounds, or reefs consisting of dense concentrations of shell, live oysters, sediments and associated biota. These beds are often supported on a matrix of sediment and shell resulting from decades of interaction between oyster populations and the large quantities of particulates characteristic to the estuarine milieu of the Southeast. Periods of tidal inundation determine the landward and aerial extent of the intertidal oyster bed while predation and siltation appear to limit oyster populations in the lower intertidal and subtidal areas (Bahr and Lanier, 1981). In South Carolina, the dominance of the oyster bed as a characteristic of estuarine topography was noted as early as 1892 by Dean (as cited in Bahr and Lanier, 1981) who commented that oyster "ledges" in many localities "have formed vast oyster flats, acres, sometimes miles, in extent." In fact, it has been estimated that 95% of the oyster population in South Carolina is intertidal (Gracy and Keith, 1972; Dame, 1979).

Harvesting intertidal oysters in South Carolina has traditionally been a hand labor activity. In recent years, however, the economics of the oyster industry and the initiation of federal and state social programs have made it increasingly difficult to recruit workers for this seasonal hand labor pool (Gracy and Keith, 1972). The mechanical harvesting of intertidal oysters is being considered as a realistic alternative to augment this dwindling labor supply. Anticipated benefits accruing from the development of mechanical harvesting include:

1. Increased utilization of oyster growing areas as harvesting becomes

less labor dependent.

2. Increased landings because the harvester will supplement hand labor and would permit gathering oysters throughout the tidal cycle.

3. Transplanting of polluted oysters to clean areas for depuration may become practical with the efficiency of a mechanical harvester.

4. Efficient cultivation methods could be initiated with the ability to move seed oysters mechanically.

The immenence of mechanical harvesting of intertidal oysters in South Carolina creates several pertinent problems. Perhaps the foremost of these concerns the effects of mechanical harvesting on water quality and integrity of benthic communities. While structurally substantial integrity, the oyster beds and supporting matrices are, in fact, in fragile balance with environmental factors. Traditional hand harvesting of intertidal oysters has done little to interrupt this balance. The advent of mechanical harvesting, however, has the potential of seriously jeopardizing intertidal populations by not only physically challenging the structure of oyster reefs but also by increasing local water silt loads and thus damaging beds adjacent to those being harvested.

The high degree of interest within the state for the development of a mechanical harvesting protocol for intertidal oysters and the development of the necessary hardware (through Clemson University) made it appropriate to environmentally assess the mechanical harvesting of oysters in South Carolina estuaries. This information is essential, not only to management agencies (i.e., S.C. Department of Wildlife and Marine Resources) and regulatory agencies (i.e., S.C. Coastal Council and Dept. of Health and Environmental Control), but also to the oyster industry which must evaluate the cost/benefit relationship of mechanization. Previous research involved the design and development of the Clemson University oyster harvesting head, the basic components of which are a detachment head conveyor and a pickup conveyor. Completion of the prototype harvesting system (which includes a 48 ft. vessel, escalator system, and harvesting head) was accomplished in May 1981.

A short term investigation to assess environmental perturbation by the prototype mechanical oyster harvester developed by Clemson University was completed in September 1981 (Manzi and Burrell, 1981). Sufficient information to allow the formulation of definitive recommendations for managing the use of the machine was not derived because of the short duration of the study. The harvester sank after an initial harvest and replant and was not salvaged in time to complete planned tests. The single trial was monitored for ten weeks and the results indicated that survival and growth of transplanted stocks were satisfactory and that excessive sedimentation did not occur in surrounding oyster beds at either the harvest or reception sites. These data supported continued development of the Clemson machine, but could not be used to make management decisions without additional intensive and long term trials.

A study was funded by the Coastal Energy Impact Program in January 1983 to help provide information for formulation of appropriate management policies. The planned experimental design included two spatial variables, harvest and control sites and high and low intertidal strata, considered over three temporal variables:

1. Pre-harvest sampling to provide baseline information on preharvest conditions,

2. Post-harvest sampling to determine immediate effects of mechanical harvesting,

3. Long-term sampling to assess harvest effects over time and season.

## METHODS

### Field sampling

A harvest site and a control site were selected in the Coosaw River drainage basin in Beaufort County South Carolina (32°30′30"N, 80°40′35"W) (Figure 1). The harvest site, situated on the south bank of the Coosaw River, was approximately 75 meters long and 16 meters wide. The mean elevation of the bed above MLW was 0.48 meters. The control site, located on the west bank of McCally's Creek, was approximately 0.16 km from the harvest site. This area was chosen because of its proximity and overall physical similarity to the harvest site. In addition, this site was located within an area where oyster picking was prohibited. This ensured its minimal disturbance of the control site by the public throughout the duration of study.

Samples for macrofaunal community analysis were selected using a stratified random method with the upper and lower intertidal zones designated as major strata. Samples for estimating oyster recruitment were collected randomly, first from observed harvester "tracks" and then from unharvested areas immediately adjacent to the sampled "track". Samples for establishing seasonal and pre- and post-harvest oyster population parameters (length-frequency distributions, condition index and live/dead ratios) were obtained by random selection of bed stock in bushel quantities from both mechanical and hand harvesting activities. The following schedule of sample collection for community analysis was observed:

Pre-Harvest Sample - early March 1983

Immediate Post-Harvest Sample - late March 1983

Spring Sample - April 1983

Summer Sample - August 1983

Fall Sample - November 1983

Winter Sample - February 1984

Length frequency relationships were calculated from composites of 6 one-bushel samples per sampling period (a minimum of 300 observations). Ratios of living to dead (tissue present or no tissue but still articulated) oysters were determined from the same bushel samples. A condition index, calculated as a tissue percentage of total shell cavity volume, was determined on two subsamples of the six bushel sample. In addition to the sampling schedule indicated above, bushel samples for establishing population parameters were collected in all intervening months between March and August 1983.

Macrofaunal communities were sampled at the harvest and control sites, using a grid coordinate system to randomly select five 1-$m^2$ areas from the two major strata (high and low intertidal). Within each area, a sample was taken using a stainless steel circular quadrat frame which was 21 cm deep and encompassed an area of 0.0625 $m^2$. This frame was pressed into the oyster bed to an approximate depth of 16 cm. The enclosed volume, including oyster clusters, dead shell and other substrate, was removed by using a post-hole digger. In situ temperature and salinity measurements were taken subtidally at the water's edge of each site during each sampling period (Appendix A).

Each sample was sealed in a 19-liter plastic bucket and returned to the laboratory where it was washed and sieved through a 0.5 mm stainless steel screen. The material retained by the sieve was preserved in 10% formalin and stained with rose bengal. The biological material was then sorted under a dissecting microscope and all invertebrates were enumerated and identified to the lowest taxonomic level possible. After sieving, all living oysters larger than 1.8 cm were counted and weighed to determine live oyster biomass (wet weight) for each sample. From this live portion, all oysters were examined for encrusting and non-motile invertebrates. Because of the difficulty of quantifying these types of organisms only the presence or absence of species was noted after identificaton.

## Data Analysis

Oyster biomass The biomass of all living oysters greater than 18 mm (longest dimension) was obtained for each sampling period as an average estimate per 0.0625 $m^2$ sample by pooling data from the five replicate samples taken from each stratum. Normality of data was determined by log-log graphic analyses of means and variances (Elliot, 1977) and homogenity of variances was indicated for all strata types for all sampling periods using Barlett's test and Scheffe-Box test (Sokal and Rohlf, 1981). Difference in mean oyster biomass between two samples was determined by the two sample t-test (Sokal and Rohlf, 1981). Model I two-way analysis of variance (Sokal and Rohlf, 1981) was used to determine whether total oyster biomass differed significantly between strata types and temporal variables. Subsequently, the Scheffe, Tukey Kramer and T-methods of *a posteriori* unplanned comparisons (Sokal and Rohlf, 1981) were used to indicate significant differences among strata types for each temporal variable.

Qualitative Assessment of Encrusting and Non-motile Invertebrates Qualitative data taken from encrusting and non-motile invertebrates found on the living portion of oysters in a sample were compared based on the number of species, frequency of occurrence of individual species, and total occurrences per sampling period. The Kruskal-Wallis one-way analysis by ranks (Siegel, 1956) was used to determine significant differences between temporal and spatial variables. The Mann-Whitney test (Daniel, 1983) was used to determine significant differences between all two-sample comparisons.

Quantitative Assessment of Motile and Non-colonial Invertebrates Data were analyzed to determine all temporal and spatial changes in species density, diversity and dominance. To obtain a larger sample size and more representative estimate of species composition for each stratum, data from replicate samples at each site were pooled.

Species density measurements were calculated as the mean number of individuals per 0.0625 $m^2$ based on replicate samples from each stratum for each sampling period. Relative abundance of individual species was determined from the total number of invertebrates collected in all replicate samples from each stratum for each sampling period.

Species diversity was estimated using the Shannon index for community diversity ($H'$), species evenness ($J'$) (Pielou, 1975) and species richness (SR) (Margalef, 1958). Annual estimates of species diversity or composition for each strata type at both harvest and control sites were taken as means over six sampling periods. The degree of dominance in each stratum for each sampling period was quantified from pooled replicates using the dominance index (DI)(McNaughton, 1967). The rejection level for the null hypothesis used for all statistical tests in this study was 95% ($\alpha = 0.05$).

## The Harvester

The harvester vessel is a steel hull pontoon design, 16 meters long. Two pontoons, each 1.55 m wide and 0.9 m deep, are separated by 1.85 m. The steel for the pontoons is 5 mm flat plate coated on both sides with coal tar epoxy. The vessel is powered by two 86 Kw outboard engines which can operate in water as shallow as 0.6 meters.

The prototype harvester head consisted of 2 sets of rotating tines, 1.2 m wide (see Figure 2). The first set of tines rotates in the direction of travel and dislodges the oysters from the bottom. The second set rotates opposite the direction of travel and picks the oysters up from the bottom. The oysters are directed onto a steel pan where a water jet transfers them to the escalator conveyor. Oysters are then transferred to a cross conveyor and loaded on a barge adjacent to the harvester. The rotating tines and the conveyor are powered with hydraulic motors run by a 125 Kw diesel engine.

One of the major objectives of this research was to develop a machine that would have minimum impact on the shell matrix or beds. The head and escalator conveyor would exert a force of over 6,000 Newtons if they were allowed to bear directly on the bottom. This would cause excessive damage in soft areas. An automatic control system was developed to maintain a constant preset force on the bottom through depths varying from 1 to 3 meters. The cable supporting the head was looped around a shieve on the rod of a hydraulic cylinder and then attached to a winch (see Figure 2). Pressure from the hydraulic system is reduced in a valve to a preset pressure and applied to the cylinder. Therefore if a bottom force of 2,000 Newtons is desired, a pressure to pull 4,000 Newtons on the cable is applied to the cylinder, leaving 2,000 Newtons to be supported by the bottom. As the water depth changes, the pressure reducing valve either adds or dumps oil from the cylinder to maintain a constant pressure. The cylinder has a control range harvest site had not decreased significantly from preharvest collections, biomass in both high and low intertidal strata of the harvest site was significantly lower than in corresponding control strata.

Oyster biomass is obviously a prime variable to reflect physical disturbance caused by the harvester. Immediately after the harvesting operation, the physical effects varied within the harvest site, with some areas appearing "undisturbed" while other reef areas had tracks and deep depressions caused by the mechanical harvester. Although randomization in sampling design was maintained for all sampling periods to determine the unbiased effects of harvesting on the oyster reef community, it was noted whether immediate post-harvest samples were taken from disturbed or undisturbed areas of the harvest site. No marked difference in mean oyster biomass was found between these samples (Table 2).

Seasonal fluctuations in mean oyster biomass at the harvest site were dissimilar to those at the control site for both high and low intertidal strata (Table 1). In pre-harvest collections, greater oyster biomass was found in high intertidal strata at both sites. For all sampling periods after the harvesting operation, mean oyster biomass was highest in the high intertidal stratum of the control site. Spring samples showed that oyster biomass had increased for all strata types at both sites; however, biomass at both harvest high and low strata were lower than preharvest values. Oyster biomass in the high intertidal area of the harvest site remained low after harvesting compared to the control site. Biomass in the low intertidal stratum of the harvest site, however, was greater than in the control during summer, fall and winter, although these differences were not statistically significant (Table 1).

The summer sampling period showed a decrease in biomass values at both sites except for an increase at the harvest low stratum above that of the of 0.8 meters, so limit switches near the end of the cylinder stroke trigger the winch to center the system automatically. This expands the automatic range to 3 meters. The harvester head was modified in the fall and winter of 1983. The resulting design, used in harvesting the areas studied in this project, had only a single set of rotating tines.

## RESULTS AND DISCUSSION

### Oyster population parameters

Approximately 600 bushels of oysters were harvested by the mechanical harvester at the Coosaw Island site on March 15 & 16, 1983. A pre-harvest survey by the South Carolina Wildlife and Marine Resources Department's Intertidal Oyster Survey Program (W.D. Anderson, personal communication) indicated that three density classifications characteristic to the harvest site had average total shell densities of 18.9, 35.6 and 24.2 US bushels/m$^2$. This converted to 1.7, 4.6 and 3.8 bushels/m$^2$ of live oysters, respectively. A redundant survey performed approximately 6 weeks after harvest indicated remaining average total densities of 0.21, 0.14 and 0.31 bushels/m$^2$ along the three strata. These surveys permitted an estimate of harvester efficiency by comparing "before and after" survey results. The resulting estimates, ranging from 87.6% to 96.9%, appear high from both subjective observations of the site and from the more objective estimates of biomass made on the harvest site.

Preharvest samples at the control and experimental sites showed greater mean oyster biomass in the high intertidal strata than in the low, although differences were not significant. Immediate post-harvest sampling indicated that mean oyster biomass had decreased in both high and low intertidal strata of the harvest site (Table 1). At this time, the control site had slightly higher mean biomass estimates for the high intertidal stratum and showed no change for the low intertidal stratum. Although mean oyster biomass at the preharvest value. One explanation for this increase could be the physical displacement of oyster clusters to low intertidal boundaries by the harvesting operation. Oyster clusters lying just above the low intertidal boundary may have eventually contributed remaining live oysters to the low intertidal stratum. Predation and siltation in the lower intertidal area would eventually cause increased oyster mortalities. Marshall (1954) found that oysters taken from an intertidal oyster bed and placed below mean low water exhibited 91% mortality, which he attributed to predation between the months of August and November in Florida. Dunnington (1968) recorded increased mortality of buried oysters with increased temperature.

Summer oyster biomass for the high intertidal stratum of the harvested site was significantly lower than the control. Bahr and Lanier (1981) reported that high oyster mortalities in the summer could occur if the angular orientation of reef oysters which provides shading to protect oysters was disrupted. The harvesting activity may have disrupted the mutual shading of crowded reef oysters at the harvest site; consequently, higher mortality due to increased summer temperatures would cause lower biomass. Biomass at the high intertidal harvest site continued to decrease throughout the summer and early fall and was significantly lower than biomass at the corresponding control site. Biomass estimates for the low intertidal areas of both sites, however, were not statistically different over the same time period.

One possible explanation for continued low biomass in the high intertidal atratum following harvest could be reduction in the intensity of oyster set. Oyster set occurs almost continuously from May to September/October (Lunz, 1954; SC Marine Resources Division, unpublished data) in South Carolina, and a decrease in biomass might reflect the failure of a site to attract set. Samples were taken in November 1983 to determine spatfall at the two sites. Table 3a indicates that there were no significant differences between sites for samples from either stratum. At both sites, significantly higher numbers of spat occurred in the high intertidal zone, compared to the lower stratum. In estimates of spatfall both within the obvious "tracks" of the harvester and in adjacent "undisturbed" areas of the harvested site (Table 3b), no significant differences could be discerned in either low or high intertidal areas. The decrease in cultch within the harvested tracks does, however, result in fewer spat per unit area of reef. This may be the reason for different biomass estimates between the two sites; i.e., the rate of spatfall was similar, but total spatfall reflected differences in available cultch.

The final winter sampling period, almost one year after harvesting, indicated an increase in oyster biomass in both harvest and control high intertidal strata and a decrease in biomass in both low intertidal strata (Table 1). Although winter biomass values were not significantly different between low intertidal strata, biomass at the high intertidal harvest site was significantly lower than the corresponding control.

The size-frequency distribution of the intertidal oyster population on the harvest site was monitored monthly from March to August, 1983. A minimum of six bushels of oysters were collected by hand monthly from the intertidal reef. All live oysters were measured across their longest dimension and tallied into size classes of 10-mm increments. Percentile size-frequency distributions indicated little change in the reef population size structure over the harvesting and initial recovery period. Pre-harvest samples indicated a population mean size of 57.8 mm (s = 20.9 mm). Mean size decreased immediately after harvest, but then increased and attained preharvest values within three months. Size distribution on the harvested reef indicated a slight, but not significant, bias toward smaller size classes immediately after harvesting but the population distribution approached pre-harvest characteristics by mid-summer.

The initial decrease in population size after harvesting would indicate some selection toward larger oysters by the mechanical harvester. Samples taken from the harvester during the harvesting operation indicated a mean population size of 63.4 mm (s = 20.9), about 5.5 mm larger than the mean population size on the reef before harvesting. Since clusters receive greater selection pressure from the harvester, and clusters contain a high proportion of the larger live oysters, it is not surprising to find some size selection evident in mechanical harvesting. Changes in population size-frequency distribution after mechanical harvesting did not appear to be mortality related. Samples taken from the harvester during operation indicated less than 1% damage to the harvested populations. In post-harvest samples taken directly from areas disturbed by the harvester (i.e., harvester "tracks"), less than 3% of the remaining oysters were noticably damaged.

## Encrusting and Non-Motile Invertebrates

A total of nine encrusting and non-motile invertebrate species were collected in this study: the protozoan spirotrich *Folliculina* sp.; the sponges *Cliona celata*, *Cliona vastifica*, *Craniella* sp., and *Haliclona loosanoff*; the anthozoan *Aiptasia pallida*; the bryozoans *Membranipora tenuis* and *Schizoporella errata*; and the barnacle *Balanus eburneus*. Based on percent occurrence in all strata types over all sampling periods combined, *M. tenuis* was the most commonly occurring species found in 54 (45%) of the 120 samples (Table 4). Other frequently occurring species were *B. eburneus* (40.8%), *Folliculina* sp. (36.7%) and the boring sponge *Cliona celata* (24.2%). The remaining species occurred relatively infrequently, while *H. loosanoff* was found in only one collection taken in the low intertidal area of the control site during the winter.

In South Carolina, *Cliona* spp. are considered to be one of the most serious oyster pests (Lunz, 1935). Hopkins (1956) examined oysters from several South Carolina areas for the presence of *Cliona* spp. and found over 90% occurrence in areas near the present study site. Folliculinid species are associated with oysters from a wide range of geographic locations and their large size make them an obvious component of the intertidal oyster community (Andrews, 1944; Wells, 1961). The barnacle *B. eburneus* is predominantly an intertidal organism (Zullo, 1963) and has been reported to be the most serious fouling organism in Beaufort, North Carolina (McDougall, 1943). Wells (1961) reported *M. tenuis*, *B. eburneus*, Follucilinid species and *C. celata* to occur in more than 40% of collections taken from oyster beds in the vicinity of Beaufort, North Carolina. In view of their reported importance to the oyster reef community, serious consideration was given to fluctuations in dominant encrusting and non-motile species (i.e., *M. tenuis*, *B. eburneus*, *Folliculina* sp., and *C. celata*).

*Species Composition* Preharvest analyses of encrusting and non-motile invertebrate species indicated similar species compositional patterns at the harvest and control sites for both high and low intertidal strata. The number of encrusting and non-motile species collected one week after the harvesting operation showed little change in species composition (Figure 3). Number of species in both strata of he control site increased in comparison to the harvest site, but the median number of species was not significantly different between sites. In addition, comparison of samples taken from the harvest site indicated no significant difference in species composition between areas disturbed by the harvester and relatively undisturbed areas of the same site (Table 2).

Based on long-term analyses subsequent to the harvesting operation the following generalizations can be made concerning the number of encrusting and non-motile species for all seasonal sampling periods (with the exception of the control low intertidal strata for the summer sampling period):

1. Species number in the low intertidal stratum was generally greater than in the high stratum at both sites;

2. All species occurring in > 20% of harvest high and low intertidal strata were also found in respective control collections;

3. Species number for both harvest strata types was consistently lower than control strata.

Although fewer species were generally found in both strata of the harvest site than in the orresponding control strata, comparisons between sites revealed no significant difference in species numbers. Comparison of summer samples from the low intertidal strata showed a greater species number at the harvest site than at the control (Figure 3). Many ecological studies have determined that distribution of attached epibenthic organisms is limited by competitive interaction for space (Connell, 1961; Gordon, 1972; Lang, 1973; Jackson, 1977). During the summer the low intertidal stratum of the harvest site had higher oyster biomass than the control site. This difference was attributed to effects of mechanical harvesting. Greater oyster biomass would provide more surface area for colonization by other invertebrates, possibly explaining the higher number of species in the low intertidal stratum of the harvested site during the summer. However, statistical analyses revealed no significant correlation between species number or frequency of occurrence of encrusting and non-motile species and oyster biomass.

<u>Frequency of Occurrence</u> Although mechanical harvesting did not appear to affect species richness it may have caused a decline in the frequency of occurrence of encrusting and non-motile invertebrates, particularly in high intertidal areas. The total number of occurrences of encrusting and non-motile species in pre-harvest pooled replicate samples for each stratum indicated no statistically significant difference between harvest and control

sites. Slightly greater values were indicated for the low intertidal stratum compared to the high intertidal stratum at each site (Table 5). Immediate post-harvest analyses found little change in number of occurrences between harvest and control strata types. In addition, there was no significant difference in the number of encrusting and non-motile species occurring on physically disturbed and on relatively unaffected areas of the harvest site. Long-term analyses indicated fewer species occurrences in the harvest high intertidal stratum than in the control for almost all sampling periods. The one exception was during the fall, when no species were found at either site. Due to the contagious distribution of these species, however, it is difficult to determine whether fewer occurrences at the harvest site are due to patchiness or to effects initiated by the harvesting activity.

Before the harvesting operation, *M. tenuis* and *B. eburneus* occurred in high intertidal samples from both sites. Individual species frequencies indicated *M. tenuis* to be most common in preharvest high intertidal collections at both harvest and control sites. Immediately after the harvesting operation, *Folliculina* sp. and *B. eburneus* were collected at the harvest high intertidal stratum while both these species in addition to *M. tenuis*, *Craniella* sp. and the anthozoan *Aiptasia pallida* occurred in the control high intertidal stratum. The absence of *M. tenuis* from the harvested site could be attributed to the normally patchy distribution of this species and no related to harvesting activity. The increased frequency of *Folliculina* sp. at the harvest site, compared to preharvest collections, may have resulted from rapid colonization immediately after the harvesting activity, although this can not be directly attributed to harvest effects since *Folliculina* sp. was also relatively common in high intertidal collections at the control site.

Long-term analyses over seasonal variables indicated that *Membranipora* tenuis and Folliculina sp. occurred less frequently among the four top ranking species in the high intertidal stratum at the harvest site than at the control site (Table 5). The contagious distribution of these species for all strata types suggests that these observed differences between harvest and control sites may not be directly attributed to the harvesting activity. For low intertidal strata, no significant difference was noted in terms of the top four ranking species between harvest and control sites over seasonal intervals. The presence of the boring sponge C. celata at both low intertidal areas and relative absence from high intertidal strata indicates that this species is primarily restricted to the low intertidal portion of oyster reefs. No other encrusting or non-motile species found in this study exhibited a distributional pattern unique to either high or low intertidal strata.

## Quantitative Analyses of Motile and Non-Colonial Invertebrates

Species composition Eighty-nine motile and non-colonial invertebrate species were collected during the course of this study (Table 6). While more species have been reported in association with oyster populations in both subtidal and intertidal areas (Wells, 1961; Maurer and Watling, 1973) the number observed in this study is greater than previous reports from strictly intertidal oyster reefs. Species number did not differ greatly between harvest and control sites. While annual species counts for high intertidal strata were 55 and 59 for harvest and control sites, respectively, 45 species were common to both sites. More species were found in the low intertidal area of both sites over an annual cycle (a total of 65 and 67 species at the harvest site and control sites, respectively), and 50 species were common to both sites. Maximum species numbers were recorded in winter collections for both high intertidal strata, while minimum species numbers were found in summer at the harvest high intertidal stratum and in fall at the control site. For low intertidal strata, a maximum number of species was recorded in preharvest collections at the harvest site and in immediate post-harvest collections atthe control site. Minimum species numbers were found in summer for both low intertidal strata. Temporal fluctuations in species number were similar between high intertidal strata at both sites, except for the immediate post-harvest sampling period. At this time, 32 species were present at the harvest site while 42 species were present at the control site. The harvesting operation apparently immediately modified the high intertidal oyster reef community. Species recorded in preharvest samples for the high intertidal stratum at the harvest site and absent one week after harvesting were primarily bottom-dwellers (e.g., *A. iricolor*, *Molgula* sp., caprellids and nemertines). The mean number of species collected over all sampling periods was significantly lower for harvest low intertidal stratum as compared to the control. Only during the final winter sampling period was species number comparable at both low intertidal sites.

Eight species comprised more than 70% of the total number of individuals collected during the study period: the pyramellid gastropod *Boonea impressa*; the polychaetes *Streblospio benedicti*, *Nereis succinea* and *Phyllodoce fragilis*; the xanthid crabs *Eurypanopeus depressus* and *Panopeus herbstii*; the amphipod *Melita nitida*; and the isopod *Cassidinidea ovalis*. Other studies have found these species to be relatively abundant in intertidal oyster reef communities (Wells, 1961; Dame, 1979; Bahr and Lanier, 1981). An additional 16 percent of the total collection was comprised of oligochaetes and nematodes. All eight species listed above were numerically dominant for annual totals taken high intertidally at both harvest and control sites. In addition, a halacaridean mite species was common high intertidally at both sites and insect pupae were abundant at the harvest site but rare at the control site.

Community Structure Species density, expressed as number of individuals per unit area, was significantly different among strata types over all sampling periods. Mean density over an annual cycle was greatest for control high intertidal strata. Density in the high intertidal area of the harvest site was less than half this value. Low intertidal densities were similar for both harvest and control areas over an annual cycle. Disturbance initiated by harvesting apparently had the greatest effect on the high intertidal area of the harvest site. The decline in species density for high intertidal strata was evident immediately after the harvesting activity. An approximate 72% decrease in species density occurred at this time while a 29% increase was calculated for the control site. In all subsequent samples, species density remained lower in the harvest high intertidal stratum than in the control. Statistically significant differences were detected in summer and fall collections. Although mechanical harvesting did not appear to affect species density in the low intertidal area of the harvest site over an annual cycle, species density at the harvested site immediately after the harvesting activity was signficantly lower than the control. Species density exhibited seasonal trends in both strata of both sites. In all sample areas, maximum species densities were recorded during winter months and mininum species densities in summer.

Species density was positively correlated with mean oyster biomass for all strata types at all sampling times (Figure 4). This relationship indicates the importance of living oysters to the oyster reef community. In the undisturbed oyster reef, mean oyster biomass was greater in the high intertidal area than in the low intertidal. Species density was correspondingly high in this portion of the oyster reef. At the disturbed harvest site, however, mean oyster biomass in the high intertidal zone was reduced and species density was also diminished. While mechanical harvesting appeared to have initially reduced species density at the harvest site, the reduction in oyster biomass in the high intertidal stratum caused species density to remain low. Oyster biomass and species density are usually lower in low intertidal areas and therefore little change in species density was found in this portion of the oyster reef. The major dominant species collected throughout this study (*B. impressa, N. succinea, S. benedicti, P. fragilis, C. ovalis, M. nitida, E. depressus,* and *P. herbstii*) with he exception of *S. benedicti* , all exhibited direct correlation of density with oyster biomass ($p < 0.05$, Kendall's rank correlation coefficient). At the control site, these species had higher densities in the high intertidal zone. At the harvested site, oyster biomass was reduced in the high intertidal area and these species had greater density in the low intertidal stratum. Subsequently, the absence of these dominants contributed to higher diversity, evenness and richness in the harvest high intertidal area and their presence in the low intertidal stratum was reflected in lower diversity, evenness and richness values.

The natural undisturbed oyster reef (control site) generally exhibited a more diverse, even and richer species assemblage in the low intertidal area (Table 7). Fewer individuals were distributed among more species, resulting in a lower dominance by species in this area. In contrast, species composition in the high intertidal area of the control site was indicative of a more limited community assemblage. Lower diversity, evenness and richness values for this stratum reflected high numerical dominance of species. Seasonal variations, in combination with daily fluctuations due to tidal action, create an extraordinarily stressful habitat in high intertidal areas. Consequently, success in the high intertidal zone is limited to those species capable of tolerating extreme fluctuations in environmental parameters; fewer species are found but these may be abundant in numbers. At the harvest site, in contrast, greater species diversity was found in the high intertidal area than in the low intertidal stratum. A comparison between high intertidal strata of the two sites indicated that diversity increased at the harvest site immediately after the harvesting activity and was significantly greater than at the control over the annual cycle. In the low intertidal area, the control site generally had a greater diversity index over the annual cycle than the harvest site. Maximum and minimum diversity peaks, however, coincided between low intertidal strata; diversity was highest at both sites in winter and lowest in summer.

Evenness and richness values were significantly different among all strata types. Comparisons of high intertidal strata showed a more even distribution at the harvest site over an annual cycle. Immediately after the harvesting activity, species evenness for low intertidal strata had increased at the control site while no change was noted at the harvest site. Subsequently, evenness remained lower at the harvest site than at the control area, especially in the summer. Low intertidal strata showed significantly lower species richness at the harvest site than the control site. During the fall a considerably less rich species assemblage was found for harvest low intertidal stratum as compared to the control. Subsequently, species richness increased in this stratum for the final winter sampling period and was slightly greater than the control. Richness values were also relatively high for high intertidal areas at both sites in winter. The increased richness during this sampling period was attributed primarily to the seasonal recruitment of numerous polychaete species.

Dominance indices were relatively high for all strata types over all sampling periods. For all collections taken during this study, dominance indices were at least 40 per cent and were attributed to a combination of any two of the following species: B. impressa, S. benedicti, N. succinea, E. depressus, oligochaetes and nematodes. Dominance indices, however, were substantially different among strata types. High intertidal strata exhibited lower dominance at the harvest site as compared to the control. Maximum and minimum dominance indices coincided for both low intertidal areas; dominance indices were greatest in the summer and lowest in the winter. The low intertidal stratum at the harvest site had a slightly greater mean dominance index for the entire study than the control site, but the difference was not statistically significant.

Abundance of the numerically dominant species in the different sampling periods is illustrated in Figure 5. Boonea impressa and S. benedicti exhibited obvious changes in abundance in response to harvesting, particularly in the high intertidal strata. Populations of both species diminished through the spring and summer at all strata of both sites. Both species showed increased abundance with the onset of cooler temperatures and winter samples of both species began to resemble pre-harvest conditions at the disturbed site. While B. impressa generally dominated all control high intertidal collections over an annual cycle, the decrease in abundance of this organism at the harvest high intertidal area was the primary factor contributing to lower dominance indices for this stratum. The decrease in oyster biomass in the harvest high intertidal stratum after harvesting accounted for the decline in abundance of this oyster ectoparasite. At the time of the immediate post-harvest sampling period, a peak dominance index was found for control high intertidal collections but not for the harvest site. This suggests that organisms which accounted for the high dominance index at the control site (primarily B. impressa ) may have been affected by the harvesting operation. In fall, dominance was also low in the high intertidal stratum of the harvest site compared to the control. At this time *B. impressa* constituted 47% of the total control high intertidal collection but only 30% of the harvest collection.

A disturbed or altered community structure may be initially dominated by opportunistic species characterized by relatively small size, high reproductive potential and short life span (Grassle and Grassle, 1974). Mechanical harvesting apparently caused a decline in abundance of *S. benedicti* in the high intertidal areas, but may have allowed this species to act opportunistically in the low intertidal area of the harvest site. In spring, one month after harvesting, *S. benedicti* was the numerically dominant organism in harvest low intertidal areas and abundance had increased 68% compared to the preharvest sampling period (Figure 5). In contrast, its abundance did not increase in the control low intertidal stratum at this time. Abundance of *S. benedicti* declined precipitously at all sites in the summer. This pattern of rapid increase in abundance and dominance followed by a sharp decline suggests an opportunistic strategy initiated by the harvesting disturbance.

The polychaete, *N. succinea*, is very abundant in South Carolina benthic communities (Harder, 1976). The high abundance of this species in summer for all strata types (Figure 5) is in agreement with other studies on this species (Bishop, 1974). The numerical dominance of *N. succinea* in immediate post-harvest collections taken from harvest high intertidal areas did not agree with the control site data. The numerical dominance of this species in the harvest high intertidal area may be a response to scavenging activities within a disturbed oyster reef community.

Abundance of *E. depressus* in all strata fluctuated over the sampling periods (Figure 5). Maximum densities at the control site were recorded in summer for high intertidal stratum and in fall for low intertidal stratum.

Numerical dominance of this species was high for both control strata in summer, primarily due to decreased densities of other invertebrates (primarily polychaetes). Lower abundance of _E. depressus_ was especially noted in harvest high intertidal collections as compared to the control for all sampling periods after harvesting. This decrease in abundance can be attributed to the decline in oyster biomass caused by the harvesting activity. Since fewer oysters were in harvest high intertidal areas this suggests less food sources and available shelter to support a large population of _E. depressus_ in contrast to the control. In low intertidal area of the harvest site, abundance of this species increased 46% in the immediate post-harvest collection, compared with a 3% increase in the corresponding control stratum. The increased abundance of _E. depressus_ in the low intertidal stratum of the harvest site may be attributed to scavenging activities upon disturbed areas of the reef.

## SUMMARY AND CONCLUSIONS

Although this study was not designed to determine harvester efficiency, biomass data and mortality estimates provide some indications of the selectivity and assault potential of the mechanical oyster harvester on intertidal beds. The high intertidal portion of oyster reefs accounts for a large portion of the reef biomass. In this zone, biomass decreased markedly after mechanical harvesting. This suggests that the large oyster clusters and clumps that typify high intertidal strata are more susceptible to mechanical harvesting. Very low mortalities were directly attributable to the harvester activities. Size frequency distribution data from pre- and post-harvest samples indicated a harvester disposition toward larger individuals on the oyster reef as a whole. Finally, an increase in mean oyster biomass on the low intertidal strata immediately following harvesting suggests that oysters were translocated toward the lower strata during the harvesting process.

Oyster biomass decreased in both high and low intertidal strata immediately after mechanical harvesting. Subsequently, biomass in the low intertidal zone increased to greater than pre-harvest values and remained high relative to the control site. This is probably attributable to displacement of oysters from the higher portion of the reef. In the high intertidal stratum of the harvested site, biomass showed an increase one month after harvest but did not attain pre-harvest values. In subsequent months biomass in this stratum decreased. This decrease was attributed to translocation of remaining oysters to lower areas of the reef and to increased mortality of remaining oysters during the summer as a result of disruption of the reef structure. Increases in oyster biomass at both control strata in fall samples was attributed to growth of summer spatfall.

Estimates of spatfall at harvested and control sites showed no significant differences in rates of recruitment between the sites. At both sites, spatfall was greater on high intertidal strata than on low intertidal strata. Subsequent differences between biomass increases at the two sites appeared to result from differences in total spatfall rather than in rates of recruitment. Mechanical harvesting reduced the surface area available for oyster set in the high intertidal portion of the reef, resulting in lower total spatfall even though the spat per unit surface area was similar to the control site.

The harvester appeared to have little effect on non-motile and encrusting organisms. Encrusting species occurred more frequently in the low intertidal strata than in the high strata, but only the boring sponge, _Cliona celata_, appeared to be limited to this area of the reef. The number of species found in the low intertidal stratum of the harvested area during the summer was higher than in the control area. This coincides with an increased oyster biomass in this stratum but no significant correlation could be demonstrated.

Mechanical harvesting did not alter the number of species of motile and non-colonial invertebrates found on the oyster reef, but species density in the high intertidal stratum was reduced. This was correlated with reduced oyster biomass on this portion of the reef as a result of harvesting activity. Community diversity was affected by the mechanical harvester, with the high intertidal portion of the reef exhibiting increased diversity and evenness and decreased dominance, while the lower intertidal area exhibited decreased diversity and increased dominance. A single species,the pyramellid gastropod _B. impressa_ , may account for both of these changes. After harvesting, this species became less abundant on the high intertidal stratum and more abundant on the low intertidal stratum. This shift in distribution might indicate a loss of habitat in the high intertidal zone or an opportunistic migration to areas where damaged oysters were displaced.

The major effects of the harvester appear to be related to reduction of biomass in the high intertidal portion of the harvested reef. This results in increased mortality of remaining oysters, decreased habitat for associated invertebrates, and lower recruitment due to limited space available for oyster set. These effects might be largely ameliorated by returning oyster shell to the high intertidal portion of a reef after mechanical harvesting.

## ACKNOWLEDGEMENTS

We thank the staff of the Marine Resources Research Institute particularly George Steele for supervising field sampling and aiding in laboratory analyses, Karen Swanson for graphic arts, and Nancy Beaumont for typing the manuscript. We also thank Bill Anderson and the staff of the Oyster Survey Project for pre- and post-harvest surveys. The manuscript was reviewed by Drs. E. Wenner, R. Van Dolah and P. Eldridge and we gratefully acknowledge their comments and criticism. Special recognition is acknowledged to Dr. E. Wenner who supervised the thesis development of the junior author (K. Klemanowicz) whose graduate research formed the basis of this report.

# REFERENCES

Andrews, E.A. 1944. Folliculinids on oyster shells. J. Mar. Res. 5: 169-177.

Bahr, L.M. and W.P. Lanier. 1981. The ecology of the intertidal oyster reefs of the South Atlantic coast: a community profile. U.S. Fish and Wild. Serv., Off. Bio. Serv. Washington, D.C.15: 105 pp.

Bishop, J. 1974. Observations on the swarming of a nereid polychaete, Neanthes succinea, from the northern Gulf of Mexico. Proc. La. Acad. Sci.37: 60-62.

Connell, J.H. 1961. The influence of interspecific competition and other factors on the distribution of the barnacle Chthamalus stellatus. Ecol. 42: 710-723.

Dame, R.F. 1979. The abundance, diversity and biomass of macrobenthos on North Inlet, South Carolina, intertidal oyster reefs. Proc. Natl. Shellfish. Assoc. 68: 6-10.

Daniel, W.W. 1983. Biostatistics: a foundation for analysis in the health sciences. New York, N.Y.: John Wiley & Sons. pp. 401-405.

Dunnington, E.A., Jr. 1968. Survival time of oysters after burial at various temperatures. Proc. Natl. Shellfish. Assoc. 58: 101-103.

Elliott, J.M. 1977. Some methods for the statistical analysis of samples of benthic invertebrates. Freshwater Biological Association. Sci. Publ. No. 25. 2nd ed. 156 pp.

Gordon, D.P. 1972. Biological relationships of an intertidal bryozoan population. J. Nat. Hist. 6: 503-514.

Gracy, R.C. and W.J. Keith. 1972. Survey of the South Carolina oyster fishery. S.C. Wild. Mar. Resour. Dept. Tech. Rep. 3: 28 pp.

Grassle, J.F. and J.P. Grassle. 1974. Opportunistic life histories and genetic systems in marine benthic polychaetes. J. Mar. Res. 32: 253-284.

Harder, H.W. 1976. Distribution and abundance of estuarine polychaetes of South Carolina. Masters Thesis. Dept. Biology. College of Charleston. 92 pp.

Hopkins, S.H. 1956. The boring sponges which attack South Carolina oysters with notes on some associated organisms. Contrib. Bears Bluff Lab. 23: 30 pp.

Jackson, J.B.C. 1977. Habitat area, colonization, and development of epibenthic community structure. In Biology of Benthic Organisms. B.F. Keegan, P.O. Ceidigh, and P.J.S. Boaden eds. Proc. 11th European Mar. Bio. Symp. Pergamon Press. Oxford and New York. pp. 349-358.

Lang, J.C. 1973. Interspecific aggression by scleractinian corals. Why the race is not only to the swift. Bull. Mar. Sci. 23: 260-279.

Lunz, G.R., Jr. 1935. Oyster pest control investigations 1935. A preliminary report of the survey of the coastal waters of South Carolina. U.S. Bur. Fish., Washington. 5 pp.

_____________. 1954. The general pattern of oyster setting in South Carolina. Proc. Natl. Shellfish Assoc. 45: 47-51.

Manzi, J.J. and V.G. Burrell, Jr. 1981. Mechanical harvesting of oysters in South Carolina. Final Report. S.C. Wild. Mar. Resour. Dept., Charleston, S.C. 8 pp. (unpublished).

Margalef, D.R. 1958. Information theory in ecology. Gen. Syst. 3: 36-71.

Marshall, N. 1954. Factors controlling the distribution of oysters in a neutral estuary. Ecol. 55(3): 322-327.

Maurer D. and L. Watling. 1973. The biology of the oyster community and its associated fauna in Delaware Bay. Delaware Bay Report Series V. 6: 97 pp.

McDougall, K.D. 1943. Sessile marine invertebrates at Beaufort, North

Carolina. Ecol. Monogr. 13(3): 321-374.

McNaughton, S.J. 1967. Relationships among functional properties of California grasslands. Nature 216: 168-169.

Pielou, E.C. 1975. Ecological Diversity. New York. N.Y.: John Wiley & Sons. 165 pp.

Siegel, S. 1956. Non-parametric statistics for the behavioral sciences. New York: McGraw-Hill.

Sokal, R.R. and F.J. Rohlf. 1981. Biometry: The principles and practice of statistics in biological research. San Francisco, CA: W.H. Freeman Co. 859 pp.

Wells, H.W. 1961. The fauna of oyster beds with special reference to the salinity factor. Ecol. Monogr. 31: 329-266.

Zullo, V. 1963. A preliminary report on the systematics and distribution of barnacles of the Cape Cod region. Marine Biological Lab., Woods Hole, 33 pp.

Table 1. Mean biomass (kg/m$^2$) of oysters (wet weight) from five sample quadrats collected at each strata by sampling period.

| | | Harvest | | Control | |
|---|---|---|---|---|---|
| Sampling | | High Intertidal | Low Intertidal | High Intertidal | Low Intertidal |
| Preharvest | $\bar{y}$ | 16.06 | 10.40 | 20.74 | 9.28 |
| | s | 7.92 | 5.87 | 7.50 | 6.64 |
| Immediate Post-Harvest | $\bar{y}$ | 6.56 | 4.48 | 23.68 | 9.28 |
| | s | 5.20 | 1.34 | 7.54 | 2.08 |
| Spring | $\bar{y}$ | 10.88 | 7.68 | 29.44 | 10.88 |
| | s | 7.18 | 7.87 | 9.23 | 2.62 |
| Summer | $\bar{y}$ | 7.04 | 11.52 | 22.72 | 2.24 |
| | s | 4.32 | 8.58 | 9.82 | 3.11 |
| Fall | $\bar{y}$ | 5.89 | 10.72 | 28.80 | 8.64 |
| | s | 7.09 | 9.62 | 6.10 | 5.84 |
| Winter | $\bar{y}$ | 6.40 | 9.34 | 28.80 | 3.62 |
| | s | 6.40 | 11.04 | 8.83 | 3.54 |

Table 2. Immediate post-harvest sample quadrats taken from "disturbed" and "undisturbed" areas of the harvest site.

| | Oyster Biomass ($kg/m^2$) | Encrusting and Non-Motile Invertebrates No. Species | Motile and Non-Colonial Invertebrates No. Individuals | Motile and Non-Colonial Invertebrates No. Species | Motile and Non-Colonial Invertebrates Dominance Index |
|---|---|---|---|---|---|
| **Disturbed** | | | | | |
| High Intertidal | 0.8 | 1 | 81 | 13 | 69.14 |
| | 14.4 | 2 | 292 | 16 | 51.37 |
| Low Intertidal | 3.2 | 1 | 434 | 16 | 74.65 |
| | 6.4 | 1 | 286 | 19 | 73.08 |
| **Undisturbed** | | | | | |
| High Intertidal | 6.4 | 1 | 326 | 18 | 54.60 |
| | 3.2 | 1 | 229 | 20 | 52.40 |
| | 8.0 | 1 | 247 | 18 | 59.92 |
| Low Intertidal | 3.2 | 1 | 180 | 20 | 63.33 |
| | 4.8 | 1 | 136 | 15 | 48.53 |
| | 4.8 | 2 | 240 | 22 | 56.25 |

Table 3. Estimates of oyster set (as number of spat per gram of cultch) in high and low intertidal areas of both harvested and control oyster reef sites (a) and both in and adjacent to harvester "tracks" at the harvested site (b).

| a. | Harvested Site | | Control Site | |
|---|---|---|---|---|
| High Intertidal | | | | |
| | Spat # | Spat/g | Spat # | Spat/g |
| | 96 | 0.10 | 69 | 0.20 |
| | 114 | 0.17 | 51 | 0.11 |
| | 102 | 0.13 | 72 | 0.15 |
| | 99 | 0.12 | 66 | 0.15 |
| | 121 | 0.15 | 90 | 0.20 |
| | 110 | 0.28 | 59 | 0.09 |
| $\bar{y}$ | 107 | 0.16 | 68 | 0.15 |
| Low Intertidal | | | | |
| | Spat # | Spat/g | Spat # | Spat/g |
| | 29 | 0.10 | 44 | 0.09 |
| | 133 | 0.05 | 38 | 0.11 |
| | 57 | 0.08 | 58 | 0.04 |
| | 64 | 0.07 | 53 | 0.08 |
| $\bar{y}$ | 71 | 0.08 | 48 | 0.08 |

b. Harvested Site

| | High Intertidal Spat/g | Low Intertidal Spat/g |
|---|---|---|
| Disturbed | 0.13* | 0.11 |
| Undisturbed | 0.15 | 0.10 |

*data represent mean spat per gram from a single one bushel sample.

Table 4. Rank by occurrence of encrusting and non-motile invertebrate species collected for all sampling periods at all strata. Percent was computed from 120- 0.0625 $m^2$ quadrats in which a taxon was present.

| Species | Count | Percent |
|---|---|---|
| *Membranipora tenuis* | 54 | 45.0 |
| *Balanus eburneus* | 49 | 40.83 |
| *Folliculina* sp. | 44 | 36.67 |
| *Cliona celata* | 29 | 24.17 |
| *Craniella* sp. | 11 | 9.17 |
| *Cliona vastifica* | 4 | 3.33 |
| *Schizoporella errata* | 4 | 3.33 |
| *Aiptasia pallida* | 3 | 2.50 |
| *Haliclona loosanoff* | 1 | 0.83 |

Table 5. Frequency of occurrence (%) for encrusting and non-motile invertebrates for each strata. Frequency was computed as percent of five quadrats analyzed for each temporal variable in which a taxon was present.

| Strata | Sampling Period | Folliculina sp. | Cliona celata | Cliona vastifica | Craniella sp. | Haliclona loosanoff | Aiptasia pallida | Membranipora tenuis | Schizoporella errata | Balanus eburneus |
|---|---|---|---|---|---|---|---|---|---|---|
| Harvest high | Preharvest | 0 | 0 | 0 | 0 | 0 | 0 | 60 | 0 | 0 |
| | Immediate | 100 | 0 | 0 | 0 | 0 | 0 | 0 | 0 | 20 |
| | Spring | 20 | 0 | 0 | 0 | 0 | 0 | 20 | 0 | 20 |
| | Summer | 0 | 0 | 0 | 0 | 0 | 0 | 0 | 0 | 40 |
| | Fall | 0 | 0 | 0 | 0 | 0 | 0 | 0 | 0 | 0 |
| | Winter | 40 | 0 | 20 | 0 | 0 | 0 | 0 | 0 | 40 |
| Harvest low | Preharvest | 0 | 40 | 0 | 0 | 0 | 0 | 20 | 20 | 40 |
| | Immediate | 60 | 20 | 20 | 0 | 0 | 0 | 20 | 20 | 0 |
| | Spring | 20 | 60 | 0 | 0 | 0 | 0 | 100 | 0 | 0 |
| | Summer | 20 | 60 | 0 | 0 | 0 | 0 | 40 | 0 | 80 |
| | Fall | 0 | 0 | 0 | 0 | 0 | 0 | 0 | 0 | 0 |
| | Winter | 60 | 60 | 0 | 0 | 0 | 0 | 80 | 0 | 0 |
| Control high | Preharvest | 40 | 0 | 0 | 0 | 0 | 0 | 100 | 0 | 80 |
| | Immediate | 60 | 0 | 0 | 20 | 0 | 20 | 80 | 0 | 80 |
| | Spring | 80 | 20 | 0 | 0 | 0 | 0 | 100 | 20 | 80 |
| | Summer | 40 | 20 | 20 | 0 | 0 | 20 | 20 | 0 | 40 |
| | Fall | 0 | 0 | 0 | 0 | 0 | 0 | 0 | 0 | 0 |
| | Winter | 100 | 20 | 0 | 0 | 0 | 0 | 100 | 20 | 100 |
| Control low | Preharvest | 60 | 80 | 0 | 40 | 0 | 0 | 0 | 0 | 20 |
| | Immediate | 60 | 100 | 20 | 60 | 0 | 0 | 100 | 0 | 80 |
| | Spring | 40 | 60 | 0 | 60 | 0 | 20 | 100 | 20 | 100 |
| | Summer | 0 | 0 | 0 | 20 | 0 | 0 | 0 | 0 | 0 |
| | Fall | 0 | 0 | 0 | 20 | 0 | 0 | 0 | 0 | 0 |
| | Winter | 80 | 40 | 0 | 0 | 20 | 0 | 60 | 0 | 60 |

Table 6. **Motile and non-colonial invertebrates collected for all sampling periods for all strata types.**

- Chordata
  - Urochordata
    - *Molgula* sp.
- Sipunculida
  - Sipunculida (unidentified)
- Mollusca
  - Gastropoda
    - *Boonea impressa*
    - *Cerithiopsis greeni*
    - *Cochliolepis parasitica*
    - *Crepidula fornicata*
    - *Doridella obscura*
    - *Doridella pharpa*
    - *Hydrobia* sp.
    - *Littorina irrorata*
    - *Mangelia* sp.
  - Pelecypoda
    - *Corbula contracta*
    - *Gemma gemma*
    - *Geukensia demissa*
    - *Ischadium recurvum*
    - *Tellina* sp.
    - Pelecypoda (unidentified)
- Nemertea
  - Nemertina (unidentified)
- Platyhelminthes
  - Nematoda
- Annelida
  - Polychaeta
    - *Amphitrite ornata*
    - *Arabella iricolor*
    - *Capitella capitata*
    - *Drilonereis magna*
    - *Eteone heteropoda*
    - *Eulalia sanguinea*
    - *Exogone dispar*
    - *Exogone verugera*
    - *Glycera americana*
    - *Haploscoloplos fragilis*
    - *Heteromastus filiformis*
    - *Lumbrinereis tenuis*
    - *Lysidice ninetta*
    - *Manayunkia* sp.
    - *Marphysa sanguinea*
    - *Nematonereis unicornis*
    - *Nereis falsa*
    - *Nereis succinea*
    - *Phyllodoce fragilis*
    - *Polydora websterii*
    - *Procerastea fasciata*
    - *Sabellaria vulgaris*
    - Sabellidae
    - *Scolopos rubra*
    - *Streblospio benedicti*
    - *Syllis cornuta*
    - Polychaeta (unidentified)
  - Oligochaeta (unidentified)
- Arthropoda
  - Arachnida
    - Halacaridae
      - Halacarid (species a)
      - Halacarid (species b)
  - Pycnogonidae
    - *Achelia sawayai*
  - Ostracoda
    - Ostracod (species a)
    - Ostracod (species b)
  - Copepoda
    - Cyclopoida (species a)
    - Siphonostoma (species b)
    - Harpactacoida (species a)
  - Cumacea
    - *Diastylis* sp.
    - *Cyclaspis* sp.
  - Tanaidacea
    - *Leptochelia rapax*
    - *Leptochelia* sp.
  - Isopoda
    - *Cassidinidea ovalis*
    - *Cleantis planicauda*
    - *Cyathura polita*
    - *Edotea montosa*
    - Epicaridea
  - Amphipoda
    - *Amphithoe valida*
    - Caprellidae
    - *Corophium acherusicum*
    - *Corophium lacustre*
    - *Erichthonius* sp.
    - *Gammarus palustris*
    - Hyperiidae
    - *Lembos websterii*
    - *Melita nitida*
    - *Parapleustes* sp.
    - Phoxocephalidae
    - *Orchestia uhleri*
  - Decapoda
    - *Alpheus heterochaelis*
    - *Eurypanopeus depressus*
    - *Leptochela* sp.
    - *Ogyrides alphaerostris*
    - *Palaemonetes vulgaris*
    - *Panopeus herbstii*
    - *Pinnixa chaetopterana*
    - *Pinnotheres ostreum*
    - *Uca pugilator*
    - *Upogebia affinis*
  - Insecta
    - *Anurida maritima*
    - Ceratopogonidae
    - insect pupae

Table 7. Temporal community structure values [number of individuals, number of species, diversity (H'), evenness (J'), richness (SR) and dominance index (DI)] for pooled replicate samples of motile and non-colonial invertebrates at each strata.

| Strata | Sampling Period | No. Individuals | No. Species | H' | J' | SR | DI |
|---|---|---|---|---|---|---|---|
| Harvest High Intertidal | Preharvest | 4124 | 30 | 2.97 | 0.60 | 3.484 | 48.21 |
| | Immediate | 1175 | 32 | 3.37 | 0.67 | 4.385 | 45.11 |
| | Spring | 1853 | 24 | 2.91 | 0.63 | 3.057 | 60.23 |
| | Summer | 534 | 24 | 3.29 | 0.72 | 3.662 | 45.13 |
| | Fall | 554 | 32 | 3.65 | 0.73 | 4.907 | 38.81 |
| | Winter | 1539 | 40 | 3.28 | 0.62 | 5.314 | 49.97 |
| Harvest Low Intertidal | Preharvest | 2066 | 34 | 3.00 | 0.59 | 4.323 | 55.91 |
| | Immediate | 1276 | 32 | 2.95 | 0.59 | 4.335 | 60.74 |
| | Spring | 2017 | 34 | 3.02 | 0.59 | 4.337 | 49.33 |
| | Summer | 897 | 27 | 2.54 | 0.53 | 3.824 | 65.44 |
| | Fall | 1137 | 27 | 2.95 | 0.62 | 3.695 | 55:32 |
| | Winter | 2563 | 49 | 3.63 | 0.65 | 6.116 | 40.23 |
| Control High Intertidal | Preharvest | 3927 | 31 | 3.06 | 0.62 | 3.625 | 51.26 |
| | Immediate | 5511 | 42 | 2.67 | 0.50 | 4.759 | 66.85 |
| | Spring | 3958 | 32 | 2.76 | 0.55 | 3.742 | 58.31 |
| | Summer | 2588 | 32 | 2.78 | 0.56 | 3.945 | 60.05 |
| | Fall | 2980 | 31 | 2.81 | 0.57 | 3.750 | 58.36 |
| | Winter | 3890 | 41 | 2.82 | 0.53 | 4.839 | 64.50 |
| Control Low Intertidal | Preharvest | 2610 | 45 | 3.41 | 0.62 | 5.593 | 48.62 |
| | Immediate | 2197 | 39 | 3.65 | 0.69 | 4.938 | 45.70 |
| | Spring | 1950 | 38 | 3.23 | 0.61 | 4.884 | 53.13 |
| | Summer | 741 | 37 | 3.21 | 0.62 | 5.448 | 54.52 |
| | Fall | 1453 | 38 | 3.41 | 0.65 | 5.082 | 48.86 |
| | Winter | 1571 | 42 | 3.68 | 0.68 | 5.571 | 43.22 |

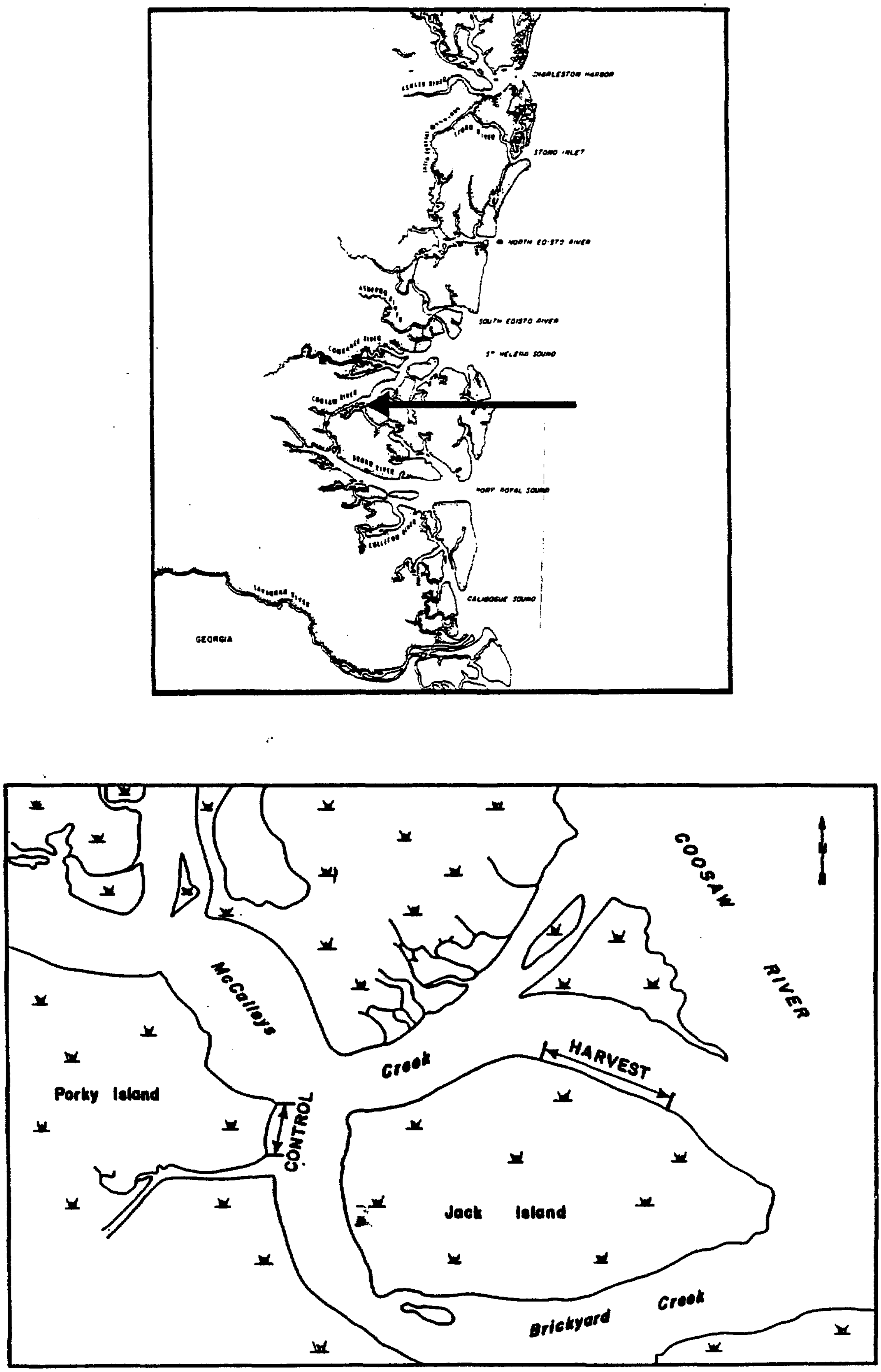

Figure 1. Location of harvest and control sites in Beaufort County, South Carolina.

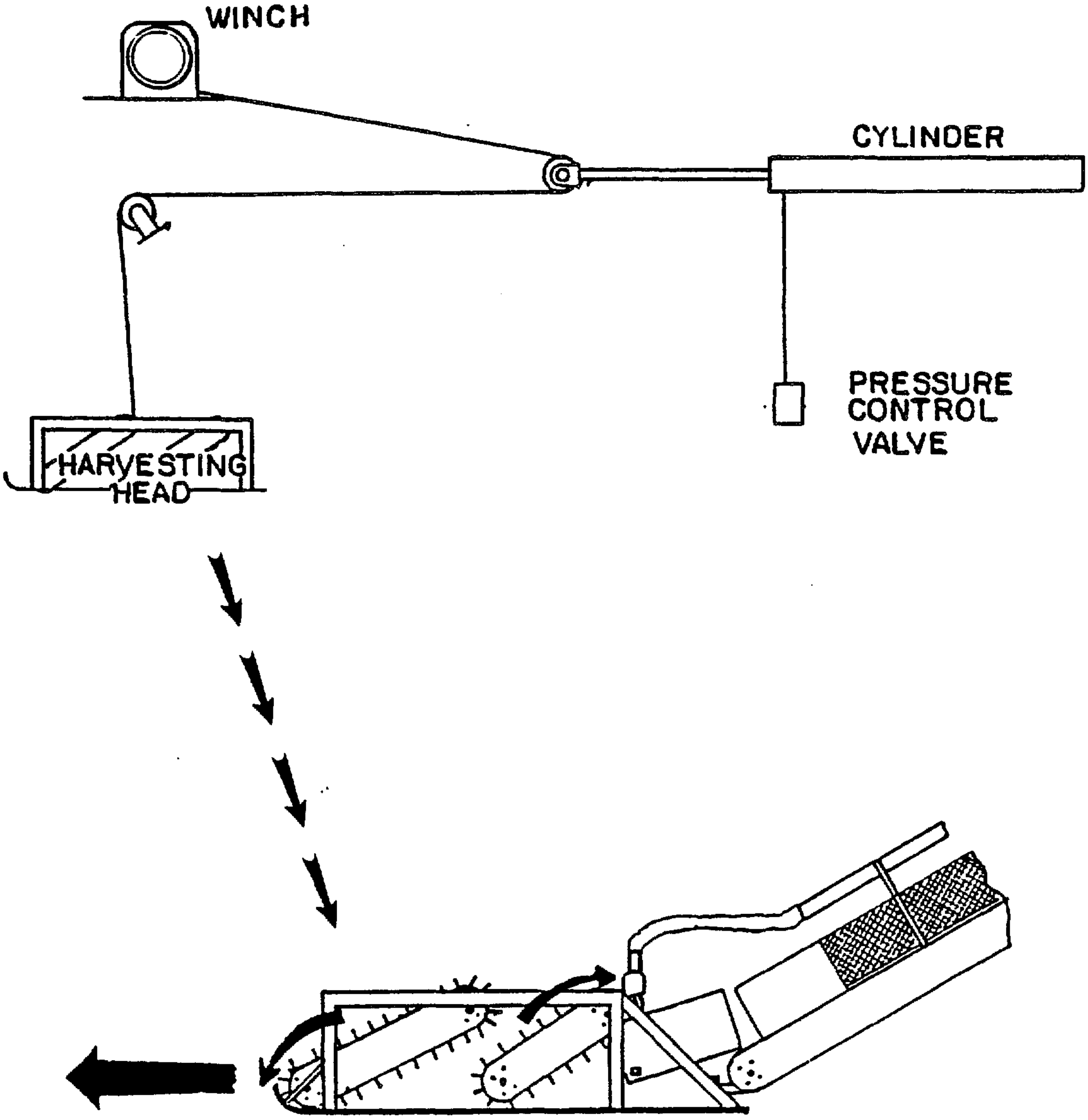

Figure 2. The Clemson mechanical oyster harvester prototype, showing configuration of the harvester head and the head control system.

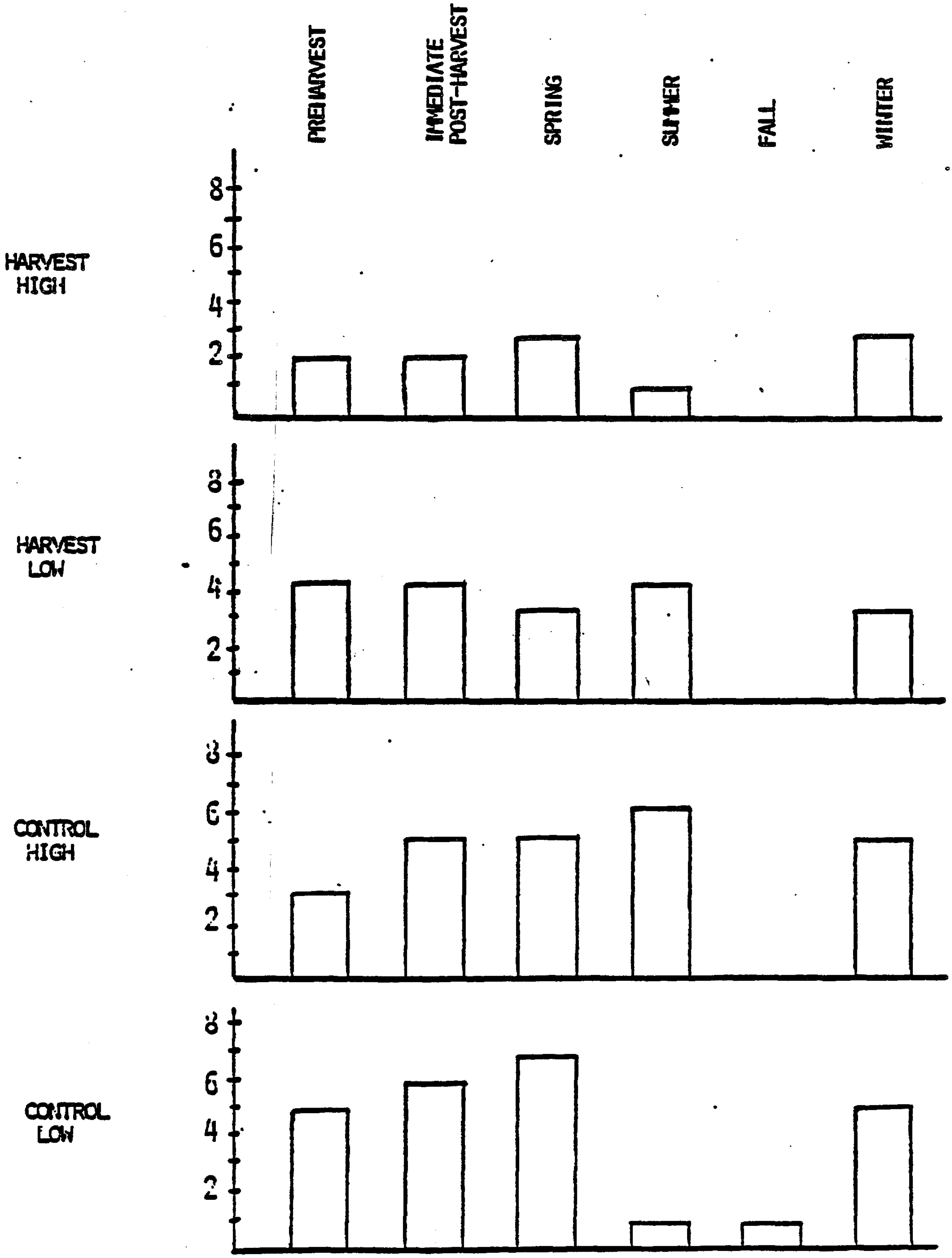

Figure 3. Total number of encrusting and non-motile species collected at each strata for each sampling period.

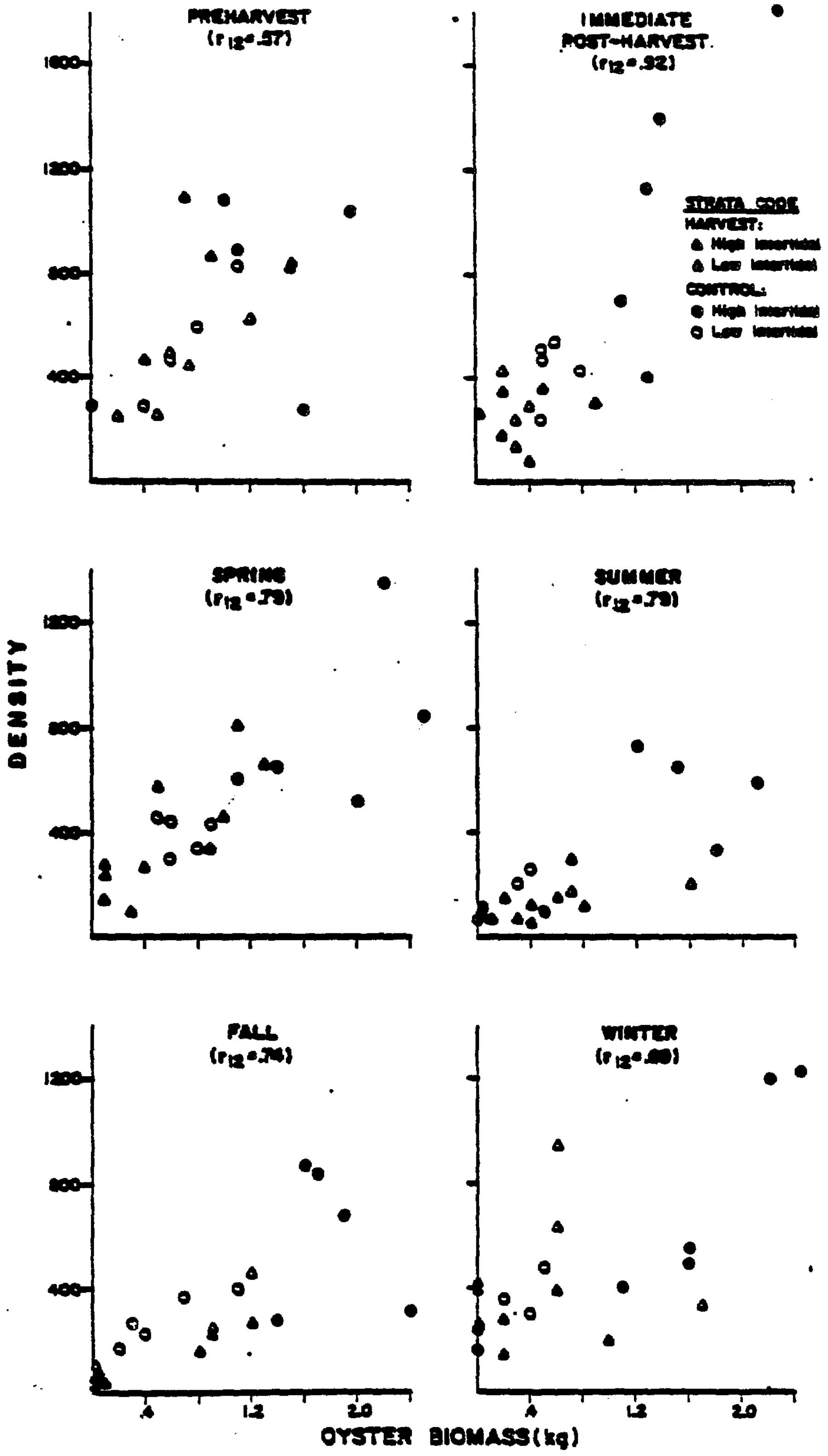

Figure 4. Species density of motile and non-colonial invertebrates vs. oyster biomass ( for five 0.0625 m$^2$ quadrats taken from high and low intertidal strata at both harvest and control sites for each sampling period (Pearson's product-moment correlation coefficient, $\alpha = 0.01$, $r_c = .561$).

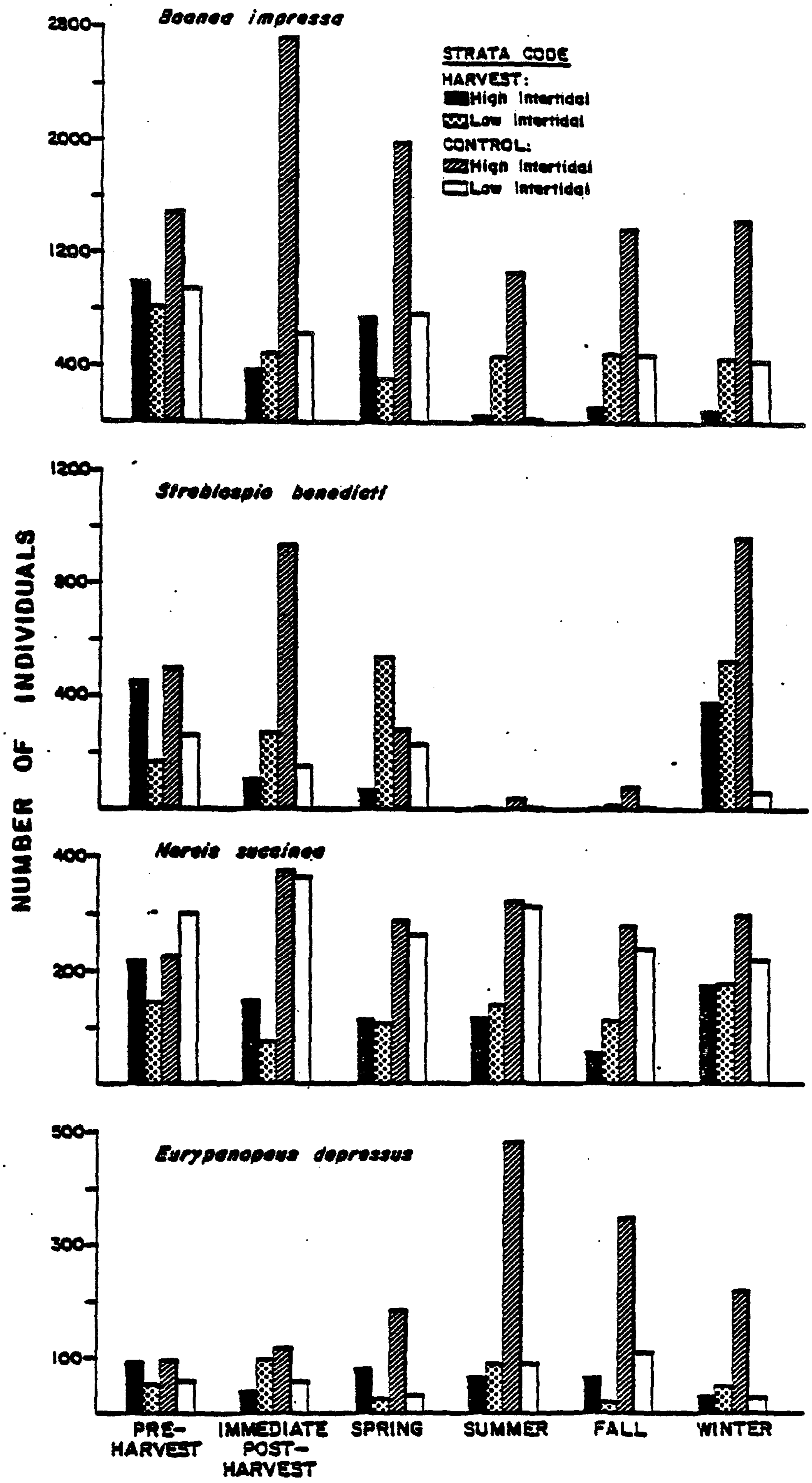

Figure 5. Total number of individuals of the numerically dominant species collected in pooled replicate samples from each stratum/site during each sampling period.

Appendix A. Salinity ($^{o}$/oo) and temperature ($^{o}$C) readings at both harvest and control sites for all sampling periods.

| | Salinity ($^{o}$/oo) | | Temperature ($^{o}$C) | |
|---|---|---|---|---|
| | Harvest | Control | Harvest | Control |
| Preharvest | 16.0 | 14.0 | 18.0 | 16.9 |
| Immediate Post-Harvest | 13.0 | 12.0 | 15.8 | 14.0 |
| Spring | 14.0 | 14.0 | 21.0 | 19.4 |
| Summer | 22.0 | 22.0 | 30.6 | 31.8 |
| Fall | 28.0 | 29.0 | 21.6 | 20.5 |
| Winter | 20.0 | 20.0 | 10.8 | 8.7 |